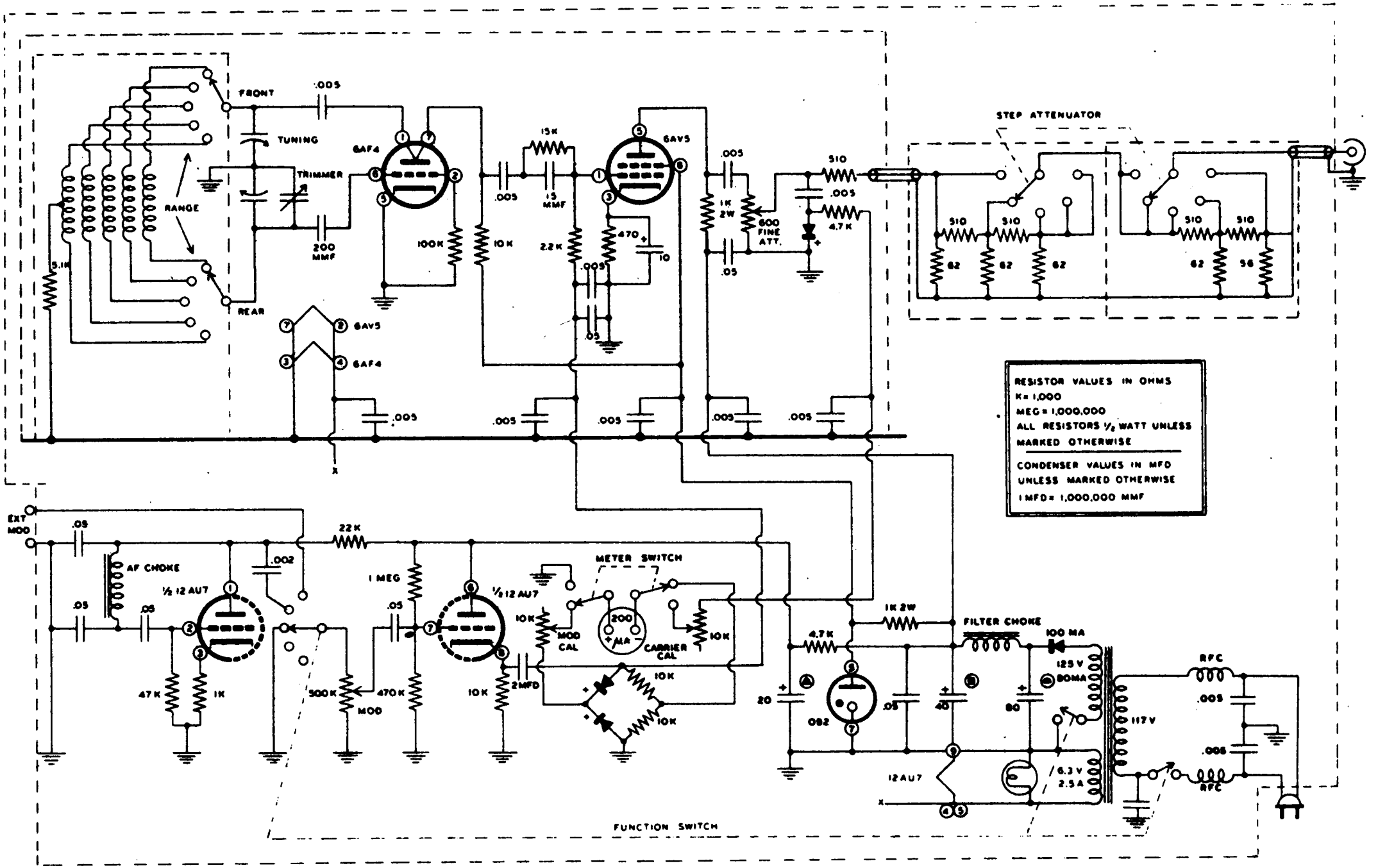
FRONT
REAR
RANGE
TUNING
TRIMMER
200 MMF
.005
6AF4
100K
10K
15K
15 MMF
2.2K
470
10
6AV5
1K 2W
600 FINE ATT.
4.7K
510
62
56
STEP ATTENUATOR
5.1K
X
RESISTOR VALUES IN OHMS
K = 1,000
MEG = 1,000,000
ALL RESISTORS 1/2 WATT UNLESS MARKED OTHERWISE
CONDENSER VALUES IN MFD UNLESS MARKED OTHERWISE
1 MFD = 1,000,000 MMF
EXT MOD
.05
AF CHOKE
.002
22K
1 MEG
1/2 12AU7
47K
1K
500K
470K
MOD
METER SWITCH
MOD CAL
200 μA
CARRIER CAL
2MFD
FILTER CHOKE
100 MA
125 V 80MA
117 V
6.3 V 2.5 A
RFC
20
40
80
OB2
12AU7
FUNCTION SWITCH