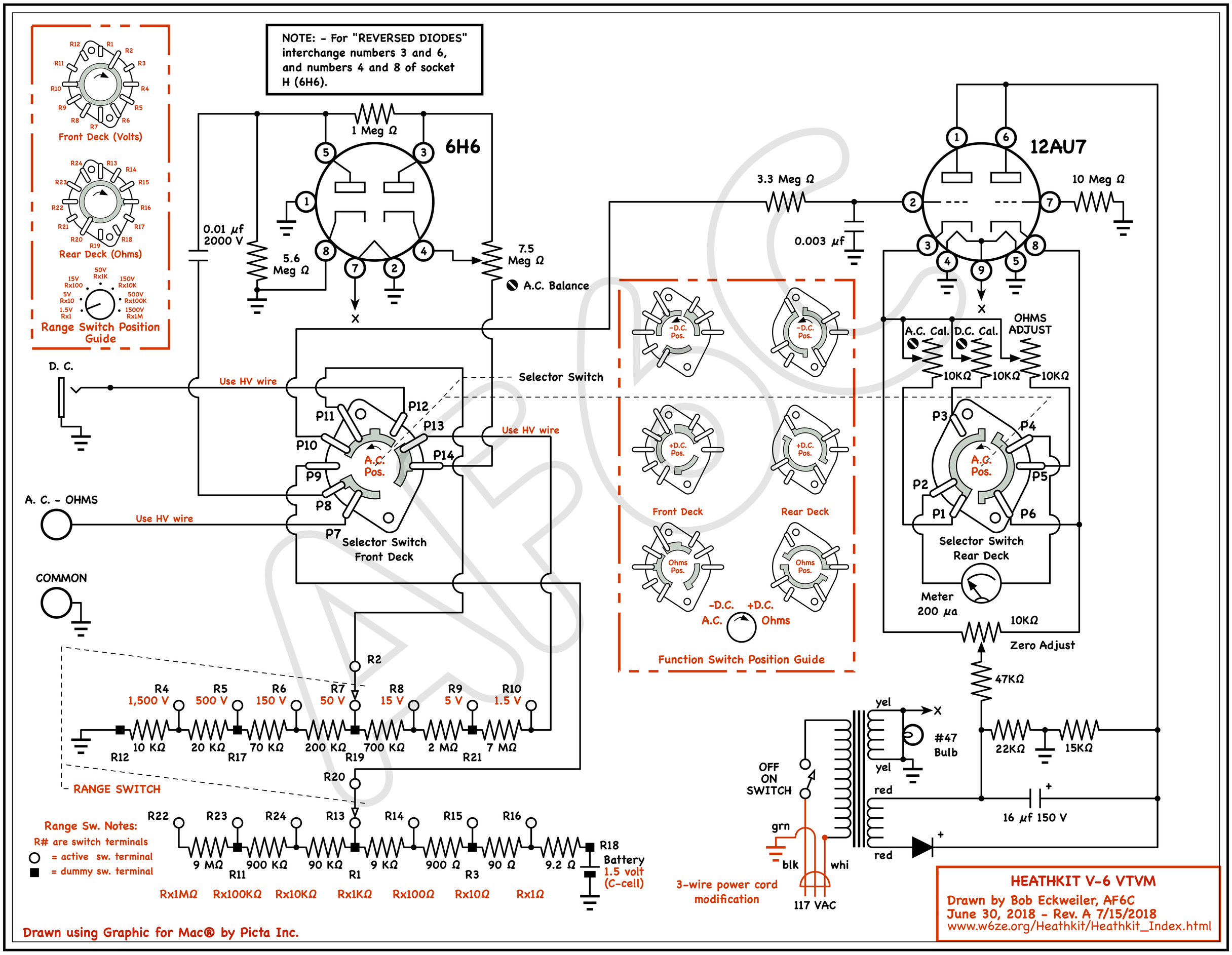
NOTE: - For "REVERSED DIODES" interchange numbers 3 and 6, and numbers 4 and 8 of socket H (6H6).
Front Deck (Volts)
Rear Deck (Ohms)
Range Switch Position Guide
6H6
1 Meg Ω
0.01 µf 2000 V
5.6 Meg Ω
7.5 Meg Ω
A.C. Balance
12AU7
3.3 Meg Ω
0.003 µf
10 Meg Ω
A.C. Cal.
D.C. Cal.
OHMS ADJUST
10KΩ
D. C.
Use HV wire
Selector Switch
A.C. Pos.
A. C. - OHMS
Selector Switch Front Deck
Selector Switch Rear Deck
Front Deck
Rear Deck
Ohms Pos.
-D.C. +D.C.
A.C. Ohms
Function Switch Position Guide
Meter 200 µa
Zero Adjust
47KΩ
22KΩ
15KΩ
16 µf 150 V
#47 Bulb
yel
red
grn
blk
whi
OFF ON SWITCH
117 VAC
3-wire power cord modification
COMMON
R2
R4 1,500 V
R5 500 V
R6 150 V
R7 50 V
R8 15 V
R9 5 V
R10 1.5 V
10 KΩ R12
20 KΩ
70 KΩ R17
200 KΩ
700 KΩ R19
2 MΩ
7 MΩ R21
RANGE SWITCH
R20
R22
R23
R24
R13
R14
R15
R16
9 MΩ
900 KΩ R11
90 KΩ
9 KΩ R1
900 Ω
90 Ω R3
9.2 Ω
R18
Battery 1.5 volt (C-cell)
Rx1MΩ
Rx100KΩ
Rx10KΩ
Rx1KΩ
Rx100Ω
Rx10Ω
Rx1Ω
Range Sw. Notes:
R# are switch terminals
= active sw. terminal
= dummy sw. terminal
Drawn using Graphic for Mac® by Picta Inc.
HEATHKIT V-6 VTVM
Drawn by Bob Eckweiler, AF6C
June 30, 2018 - Rev. A 7/15/2018
www.w6ze.org/Heathkit/Heathkit_Index.html