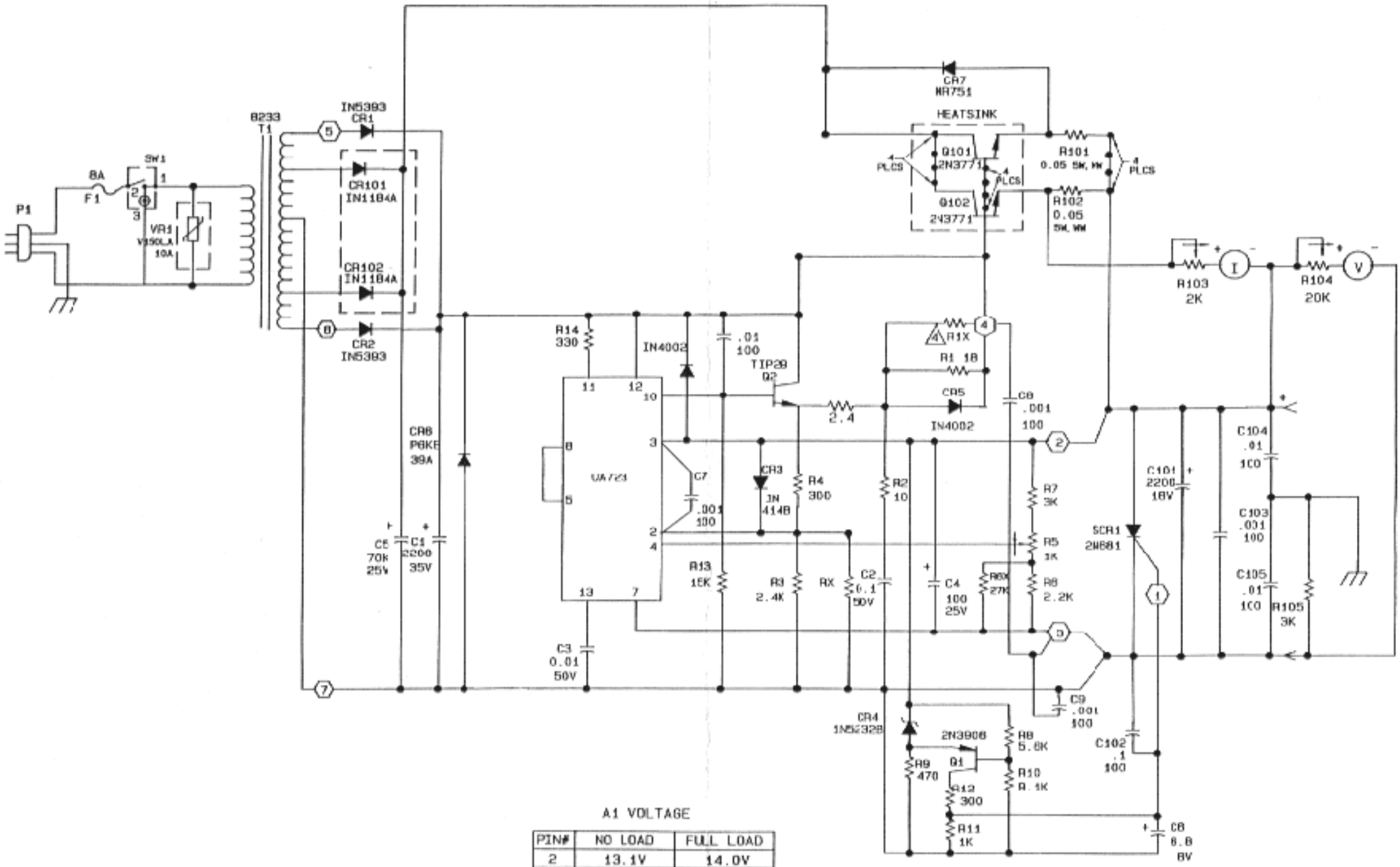

A1 VOLTAGE

PIN#	NO LOAD	FULL LOAD
2	13.1V	14.0V
3	13.8V	13.7V
4	7.2V	7.2V
5	7.2V	7.2V
6	7.2V	7.2V
7	0.0V	0.0V
10	14.8V	16.5V
11	29.0V	25.0V
12	29.0V	25.0V
13	16.1V	17.8V

UNLESS OTHERWISE NOTED
1. ALL RESISTORS 5%, 0.5W, C.F, IN OHM.
2. ALL CAPACITORS IN MICROFARADS.
3. ⬡ PRINTED CIRCUIT BOARD.
4. △ TO BE SELECTED IN TEST.

ASTRON CORPORATION

IRVINE, CALIFORNIA

DATE: 4/16/1987 | APPROVED:

RS-35M