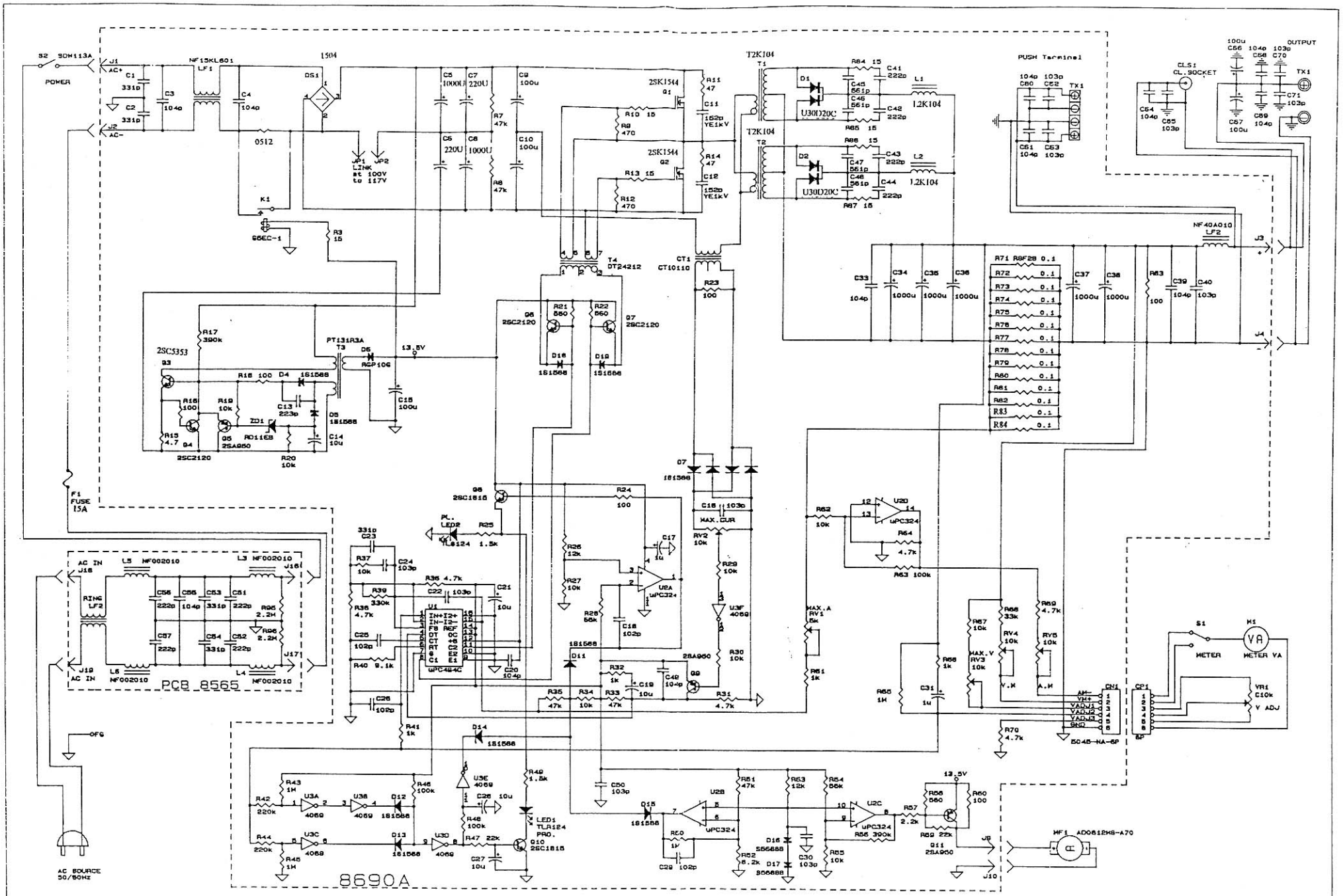

SS-505a

Size	Document Number	REV
C	8690A, 84718	01
Date: June 27, 1997	Sheet 1 of 1	