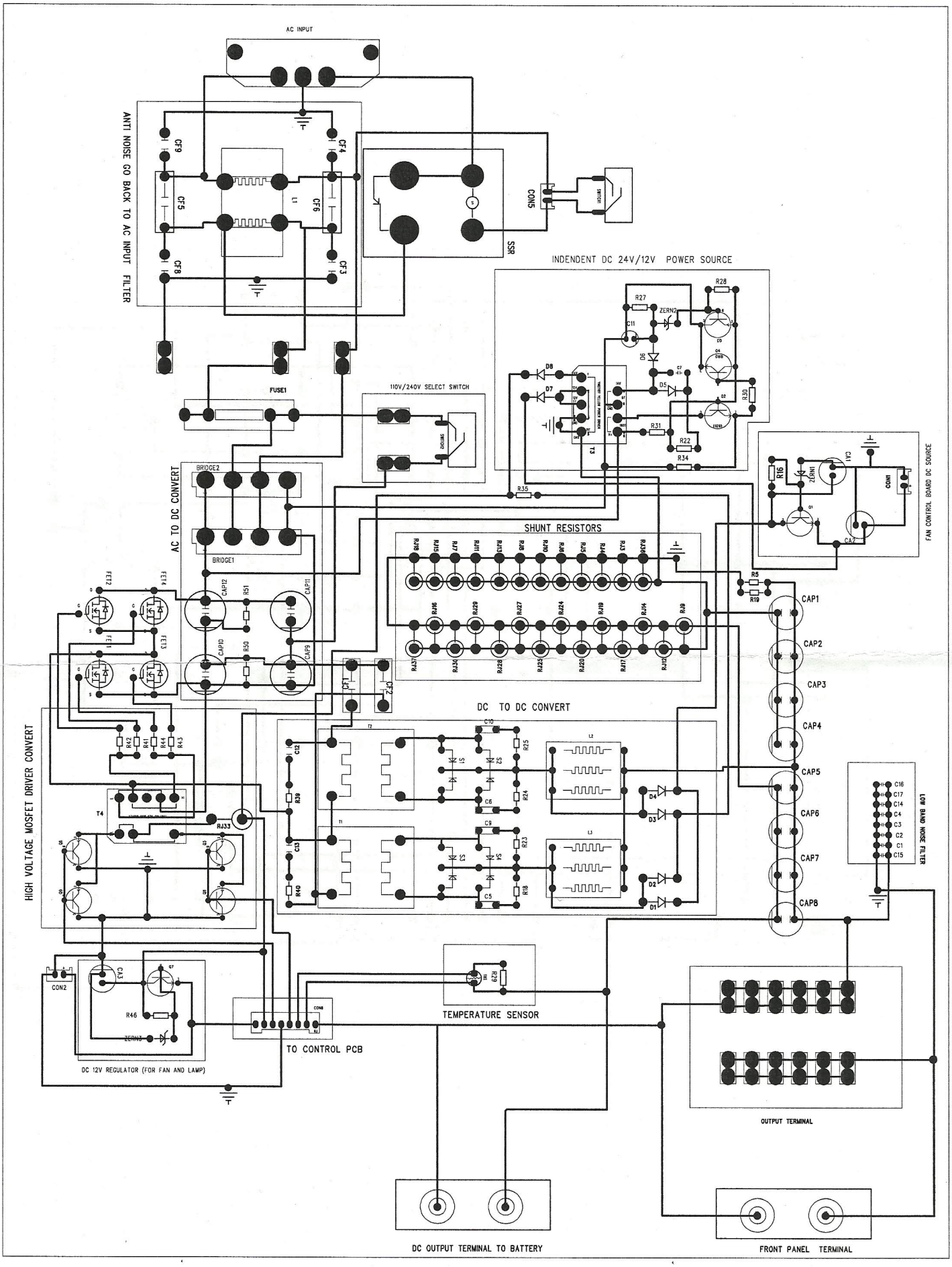
AC INPUT
ANTI NOISE GO BACK TO AC INPUT FILTER
CF9
CF5
CF8
CF4
CF6
CF3
L1
CON5
SSR
INDENDENT DC 24V/12V POWER SOURCE
FUSE1
110V/240V SELECT SWITCH
AC TO DC CONVERT
BRIDGE2
BRIDGE1
SHUNT RESISTORS
FAN CONTROL BOARD DC SOURCE
CAP1
CAP2
CAP3
CAP4
CAP5
CAP6
CAP7
CAP8
DC TO DC CONVERT
HIGH VOLTAGE MOSFET DRIVER CONVERT
LOW BAND NOISE FILTER
TEMPERATURE SENSOR
TO CONTROL PCB
DC 12V REGULATOR (FOR FAN AND LAMP)
OUTPUT TERMINAL
DC OUTPUT TERMINAL TO BATTERY
FRONT PANEL TERMINAL

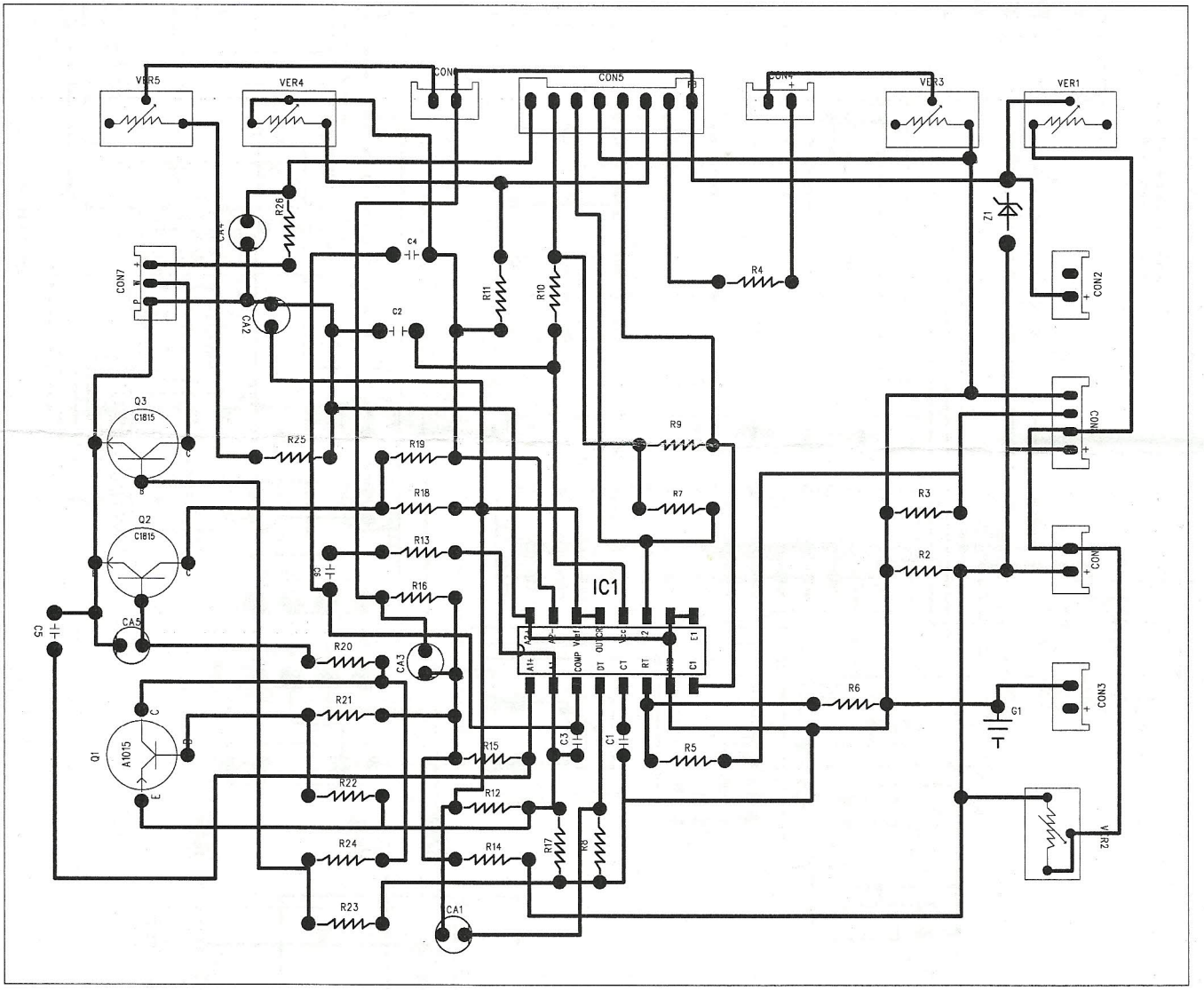
VER5
VER4
CON6
CON5
CON4
VER3
VER1
R26
CA4
CON7
CA2
C4
C2
R11
R10
R4
Z1
CON2
Q3
C1815
R25
R19
R9
R18
R7
R3
Q2
C1815
R13
R2
C6
IC1
R16
C5
CA5
R20
CA3
R6
G1
CON3
R21
Q1
A1015
R15
C3
C1
R5
R22
R12
R24
R14
R17
R8
VR2
R23
CA1