ICOM

SERVICE MANUAL

COMMUNICATION
RECEIVER FOR COMPUTER

IC-PCR1000

Icom Inc.

INTRODUCTION

This service manual describe the latest service information for the IC-PCR1000 COMMUNICATION RECEIVER FOR COMPUTER at the time of publication.

MODEL	VERSION	SYMBOL
IC-PCR1000	U.S.A Europe Other	USA EUR OTH

To upgrade quality, any electrical or mechanical parts and internal circuits are subject to change without notice or obligation

DANGER

NEVER connect the receiver to an AC outlet or to a DC power supply that uses more than 16 V. Such a connection could cause a fire hazard and/or electric shock.

DO NOT expose the receiver to rain, snow or any liquids.

DO NOT reverse the polarities of the power supply when connecting the receiver.

DO NOT apply an RF signal of more than 20 dBm (100 mW) to the antenna connector. This could damage the receiver's front end.

ORDERING PARTS

Be sure to include the following four points when ordering replacement parts:

1. 10-digit order numbers
2. Component part number and name
3. Equipment model name and unit name
4. Quantity required

<SAMPLE ORDER>

1130003830	S.IC	TC7S04F	IC-PCR1000	RF UNIT	1 piece
8810008960	Screw	FH M2.6 × 5 ZK	IC-PCR1000	CHASSIS	8 pieces

Addresses are provided on the inside back cover for your convenience.

REPAIR NOTES

1. Make sure a problem is internal before disassembling the receiver.
2. **DO NOT** open the receiver until the receiver is disconnected from its power source.
3. **DO NOT** force any of the variable components. Turn them slowly and smoothly.
4. **DO NOT** short any circuits or electronic parts. An insulated tuning tool MUST be used for all adjustments.
5. **DO NOT** keep power ON for a long time when the receiver is defective.
6. **READ** the instructions of test equipment thoroughly before connecting equipment to the receiver.

TABLE OF CONTENTS

SECTION 1 SPECIFICATIONS

SECTION 2 INSIDE VIEW

SECTION 3 DISASSEMBLY INSTRUCTIONS

SECTION 4 CIRCUIT DESCRIPTION

4 – 1 RECEIVER CIRCUITS ..... 4 – 1
4 – 2 PLL CIRCUITS ..... 4 – 4
4 – 3 SCOPE CIRCUIT ..... 4 – 5
4 – 4 POWER SUPPLY CIRCUITS ..... 4 – 5
4 – 5 CPU PORT ALLOCATIONS ..... 4 – 6

SECTION 5 ADJUSTMENT PROCEDURES

5 – 1 PREPARATION BEFOR SERVICING ..... 5 – 1
5 – 2 PLL ADJUSTMENT AND IF PEAK ADJUSTMENT ..... 5 – 3
5 – 3 RECEIVER ADJUSTMENT ..... 5 – 5
5 – 4 SOFTWARE ADJUSTMENT ..... 5 – 7

SECTION 6 PARTS LIST

SECTION 7 MECHANICAL PARTS AND DISASSEMBLY

SECTION 8 SEMI-CONDUCTOR INFORMATION

SECTION 9 BOARD LAYOUTS

9 – 1 LOGIC UNIT ..... 9 – 1
9 – 2 RF UNIT ..... 9 – 3

SECTION 10 BLOCK DIAGRAM

SECTION 11 VOLTAGE DIAGRAM

11 – 1 LOGIC UNIT ..... 11 – 1
11 – 2 RF UNIT ..... 11 – 2

SECTION 1 SPECIFICATIONS

■ GENERAL

• Frequency range :

Version	Frequency Range (MHz)
U.S.A.	0.010000 – 823.999999* 849.000001 – 868.999999 894.000001 – 1300.000000
Europe and others	0.010000 – 1300.000000*

*Specifications guaranteed 0.5–1300 MHz only

• Mode : USB, LSB, CW, AM, FM, WFM
• Frequency stability : ±3 ppm (at 1300 MHz: ±0°C to +50°C; +32°F to +122°F)
• Frequency resolution : 1 Hz (minimum)
• Power supply requirement : 13.8 V DC ±15 % for receiver unit; or, supplied AC adaptor (negative ground)
• Current drain (at 13.8 V DC) : Power ON (PC power OFF) 0.1 A
Max. audio 0.7 A
Standby (squelched) 0.6 A
• Usable temperature range : ±0°C to +50°C; +32°F to +122°F
• Antenna connector : BNC (50 Ω)
• RS-232C connector : D-sub 9-pin (female)
• Dimensions (projections not included) : 127.5(W)×30(H)×199(D) mm;
5(W)×1 3/16(H)×7 27/32(D) inch
• Weight : approx. 1 kg; 2 lb 3 oz

■ RECEIVER

• Receive system : Triple-conversion superheterodyne
• Intermediate frequency : 1st 266.7 MHz
2nd 10.7 MHz
3rd 450 kHz (except WFM)
• Sensitivity (typical)* :

Frequency [MHz]	FM	WFM	AM	SSB/CW
0.5 – 1.799999	—	—	2.5 μV	0.56 μV
1.8 – 27.999999			1.4 μV	0.28 μV
28.0 – 29.999999	0.5 μV			
30.0 – 49.999999			1.8 μV	0.35 μV
50.0 – 699.999999	0.32 μV	0.79 μV	1.0 μV	0.2 μV
700.0 –1300.000000	0.4 μV	1.0 μV	1.3 μV	0.25 μV

*FM and WFM are measured at 12 dB SINAD; AM, SSB and CW are measured at 10 dB S/N.; 230 kHz (for WFM), 15 kHz (for FM), 6 kHz (for AM) and 2.8 kHz (for SSB/CW) passband widths are selected.

• Squelch sensitivity (at threshold) :

Frequency [MHz]	FM	WFM	AM	SSB/CW
0.5 – 1.799999	—	—	1.8 μV	14 μV
1.8 – 27.999999			0.89 μV	7.1 μV
28.0 – 29.999999	0.63 μV			
30.0 – 49.999999				
50.0 – 699.999999	0.5 μV	5.6 μV	0.71 μV	5.6 μV
700.0 –1300.000000	0.63 μV	7.1 μV	0.89 μV	7.1 μV

• Selectivity : WFM 230 kHz/–6 dB
WFM/FM/AM 50 kHz/–6 dB
FM/AM 15 kHz/–6dB
FM/AM/SSB/CW 6 kHz/–6 dB
AM/SSB/CW 2.8 kHz*/–6 dB (*Software indicates 3 kHz)
• IF shift range : More than ±1.2 kHz
• Max audio output : 200 mW at 10% distortion with an 8Ω load
• External speaker connector : 3-conductor 3.5(d) mm (1/8")/4–8 Ω

All stated specifications are subject to change without notice or obligation.

SECTION 2 INSIDE VIEW

• LOGIC UNIT and RF UNIT

* : Located underside of this point.

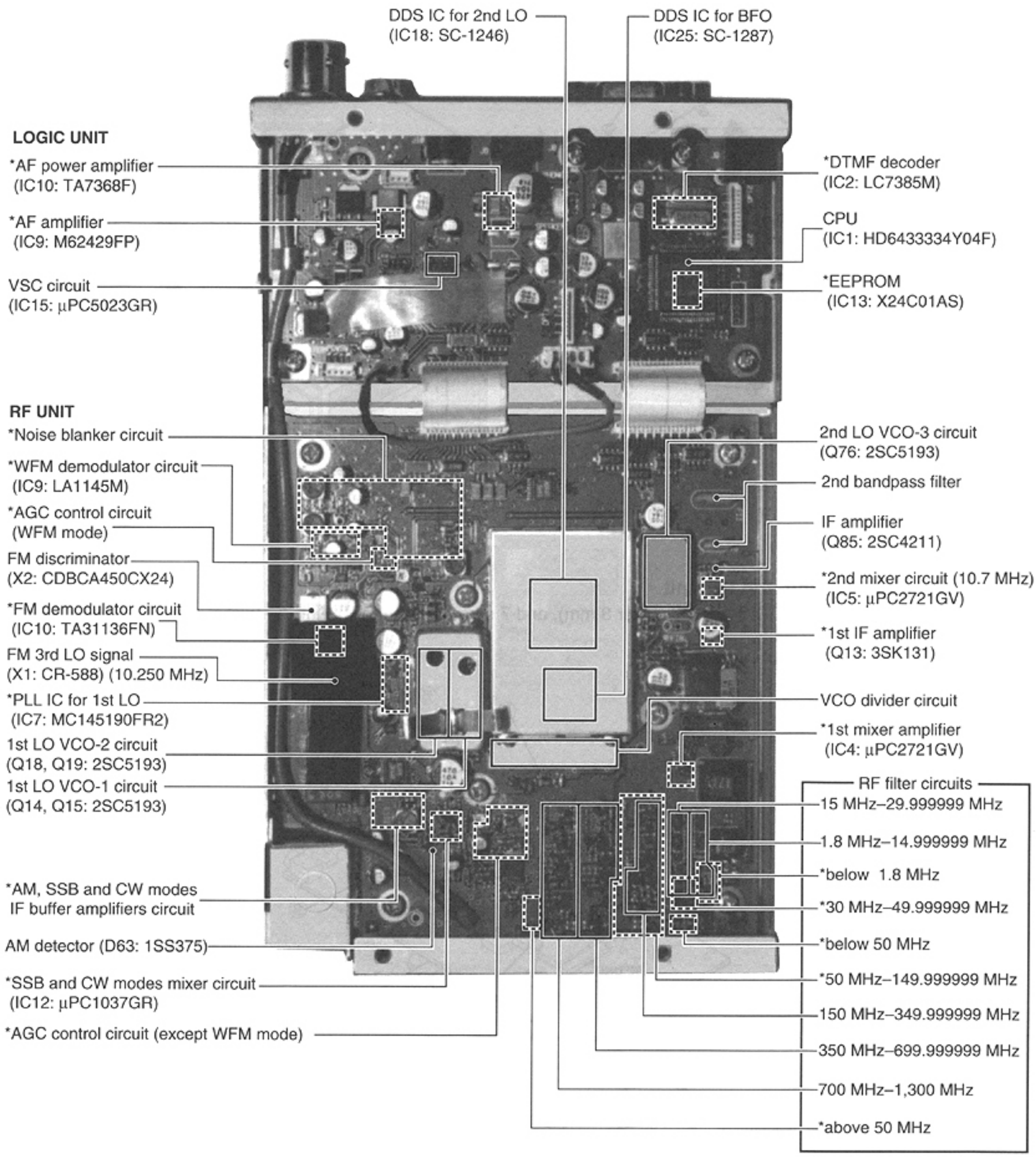

SECTION 3 DISASSEMBLY INSTRUCTIONS

• Removing the cover panel

① Unscrew 8 screws, Ⓐ.

② Remove the cover panel in the direction of the arrow.

③ Remove the shield cover in the direction of the arrow.

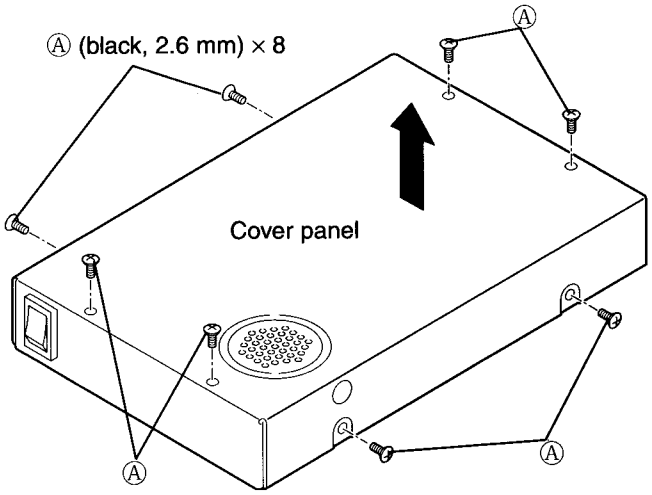

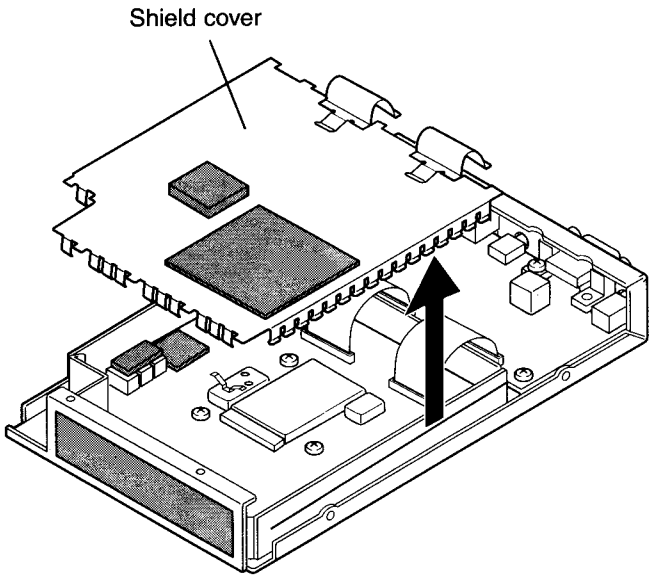

• **Removing the LOGIC unit and RF unit**

① Unscrew 5 screws from the LOGIC unit, Ⓑ (silver 3 mm), and 7 screws from the RF unit, Ⓒ (nickel, 3 mm), to separate the chassis and units.

② Remove the units in the direction of the arrow.

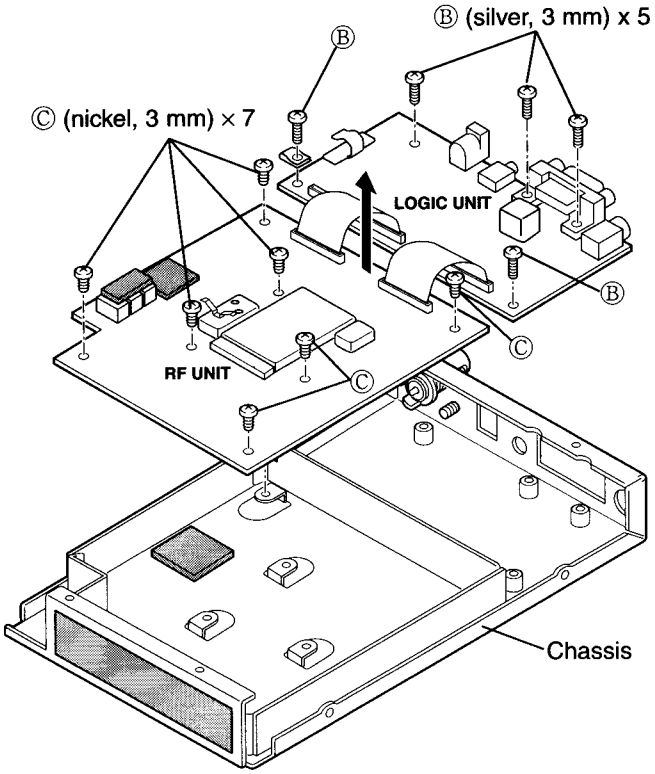

SECTION 4 CIRCUIT DESCRIPTION

4-1 RECEIVER CIRCUITS

4-1-1 RF ATTENUATOR CIRCUIT (RF UNIT)

The attenuator circuit attenuates the signal strength to approx. 20 dB to protect the RF amplifier from distortion when excessively strong signals are received.

The RF signals from the antenna connector are passed through or bypass the "L" type attenuator (R1, R3). The signals are then applied to the RF filter circuit.

4-1-2 RF FILTER CIRCUIT (RF UNIT)

The applied signals pass through either the low-pass filter or the high-pass filter circuits via the band switching diodes.

• RF signals below 50 MHz

The RF signals below 50 MHz are passed through the low-pass filter (L1, L2, C7–C11) via the band switching diode (D2). The filtered signals are applied to the HF RF circuit.

• RF signals above 50 MHz

The RF signals above 50 MHz are applied to the high-pass filter (L172, C651, C652) after passing through the band switching diode (D84). The filtered signals are then applied to the VHF/UHF RF circuit.

4-1-3 HF RF CIRCUIT (RF UNIT)

The HF RF circuit amplifies the received signals within the range 0.01–50 MHz and filters out-of-band signals.

The HF RF circuit consists of three low-pass filters, three high-pass filters and one RF amplifier.

The filtered signals below 1.8 MHz from the RF filter circuit are passed through the low-pass filter (L3, L4, C14– C16) between the band swithing diodes (D6, D36), and are then applied to the 1st mixer circuit (IC4).

The 1.8–14.999999 MHz signals pass through the low-pass filter (L6, L7, C21–C25) and high-pass filter (L8, L9, C26–C30) between the band switching diodes (D3, D7), and are then applied to the 1st mixer circuit after being amplified at the RF amplifier (Q12).

The 15–29.999999 MHz signals pass through the low-pass filter (L10, L11, C33–C37) and high-pass filter (L11, L12, C38–C42) between the band switching diodes (D3, D7), and are then applied to the 1st mixer circuit via the RF amplifier circuit (Q12).

The 30–49.999999 MHz signals pass through the high-pass filter (L14, L15, C45–C49) between the band switching diodes (D8, D5), and are then applied to the 1st mixer circuit via the RF amplifier circuit (Q12).

• Filters

Receive freq. (MHz)	SW diode	Filter select signal	Components
0.01–1.799999	D6, D36	B0	L3–L5, C14–C17
1.8–14.999999	D3, D7	B1	L6–L9, C21–C30
15.0–29.999999	D3, D7	B2	L10–L13, C33–C42
30.0–49.999999	D8, D5	B3	L14, L15, C45–C49

4-1-4 VHF/UHF RF CIRCUIT (RF UNIT)

The VHF/UHF RF circuit amplifies the received signals within the range 50–1300 MHz and filters out-of-band signals.

The VHF/UHF RF circuit consists of 4 bands of filter circuits with an RF amplifier for each.

The 50–149.999999 MHz signals from the RF filter pass through high-pass filter (D11, L17, C53–C55, D12, D82, D83, L18, C57) via the band switching diode (D10), and are then amplified at the RF amplifier (Q8) between the tunable bandpass filters (D13, D80, L19–L21, D14, D81, L23–L25). The filtered signals are applied to the 1st mixer circuit (IC4) via the band switching diode (D15).

For improving the characteristic of the bandpass filter circuit, the shift switch (Q84) shifts the cut off frequency of the high-pass filter (D12, D82, D83, L18, C57). The shift switch (Q84) is controlled by the VCO 1 signal from the DDS IC (IC18).

• RF filter and amplifier circuits

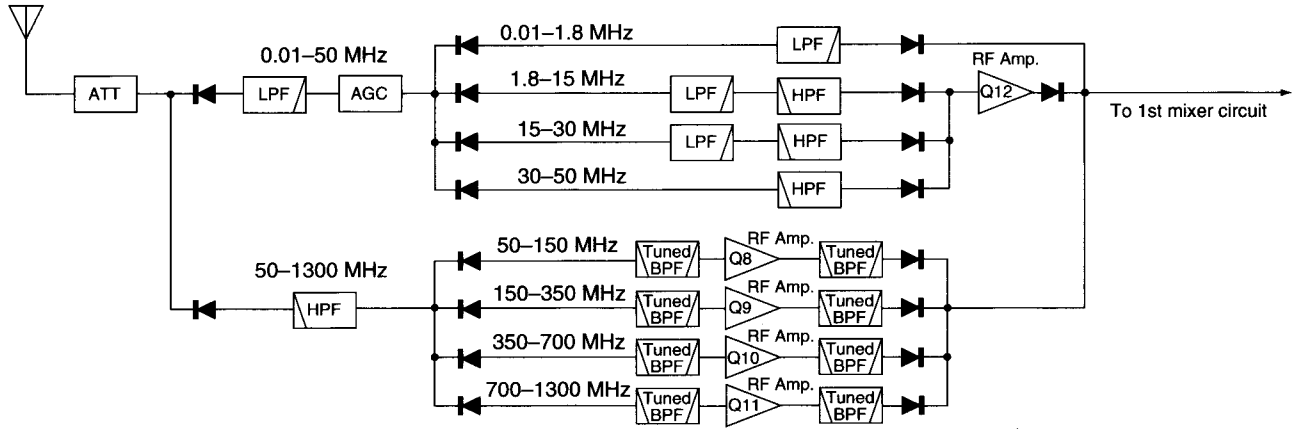

The 150–349.999999 MHz signals from the band switching diode (D16) pass through the high-pass filter (L27–L29, C69–C74) and tunable bandpass filter (D18, L31–L33), and are then amplified at the RF amplifier (Q9) and pass through another tunable bandpass filter (D19, L35–L37). The filtered signals are applied to the 1st mixer circuit (IC4) via the band switching diode (D20).

The 350–699.999999 MHz signals from the band switching diode (D21) pass through the high-pass filter (L40, C92–C94, C619) and tunable bandpass filter (D23, D76, L41, L42). The filtered signals are then amplified at the RF amplifier (Q10) and pass through the tunable bandpass filters (D24, D77, L45–L47). The filtered signals are applied to the 1st mixer circuit (IC4) via the band switching diode (D25).

The 700–1300 MHz signals from the band switching diode (D26) pass through the high-pass filter (L141, C110, C606) and 2-stage tunable bandpass filters (D78, D79, L163, D29, D30, L51–L53). The filtered signals are then amplified at the RF amplifier (Q11) and pass through the tunable bandpass filters (D31, D32, L55, L56). The filtered signals are applied to the 1st mixer circuit (IC4) via the band switching diode (D33).

The tunable bandpass filters employ varactor diodes to tune the center frequency of the RF passband for wide bandwidth receiving and good image response rejection. These diodes are controlled by TUNV signal from the CPU (LOGIC unit; IC1, pin 37) via the tune controller (LOGIC unit; IC11b).

• Tunable bandpass filters

Receive freq. (MHz)	BPF select signal	Varactor diodes	RF amp.
50.0–149.999999	B0	D11–D14, D80–D83	Q8
150.0–349.999999	B1	D18, D19	Q9
350.0–699.999999	B2	D23, D24, D76, D77	Q10
700.0–1300.0	B3	D29–D32, D78, D79	Q11

4-1-5 1ST MIXER CIRCUIT (RF UNIT)

The 1st mixer circuit converts the received RF signals to a fixed frequency of the 1st IF signal with a PLL output frequency. By changing the PLL frequency, only the desired frequency will pass through the bandpass filters at the next stage of the 1st mixer.

The filtered RF signals are mixed with 1st LO signals at the 1st mixer circuit (IC4) to produce a 266.7 MHz 1st IF signal. The 1st IF signal is output from pin 5, and passed through the bandpass filter (FI1) to suppress unwanted harmonic components. The filtered 1st IF signal is applied to the IF circuit.

The 1st LO signals are generated at the VCO-1 (Q14, Q15) or VCO-2 (Q18, Q19) circuit (according to the receiving frequency band) and are amplified at the buffer amplifier (IC26). The amplified signals are then applied to the 1st mixer (IC4, pin 2) directly or passed through the divider circuit (IC6).

4-1-6 1ST IF AND 2ND MIXER CIRCUITS (RF UNIT)

The 2nd mixer circuit converts the 1st IF signal to a 2nd IF signal.

The filtered 266.7 MHz 1st IF signal from the bandpass filter (FI1) is amplified at the 1st IF amplifier (Q13) then mixed with the 2nd LO signal at the 2nd mixer circuit (IC5) to produce a 10.7 MHz 2nd IF signal. The 2nd IF signal is passed through one of 2 bandpass filters (FI2 or FI3; depending on the selected mode and bandwidth) after being amplified at the IF amplifier (Q85). The filtered 2nd IF signal is amplified at the buffer amplifier (Q39), then applied to the WFM demodulator or 3rd IF circuit.

4-1-7 3RD MIXER CIRCUIT (RF UNIT)

The 3rd mixer circuit mixes the 2nd IF signal and 3rd LO signal to produce a 450 kHz 3rd IF signal (except WFM mode).

• IF and demodulator circuits

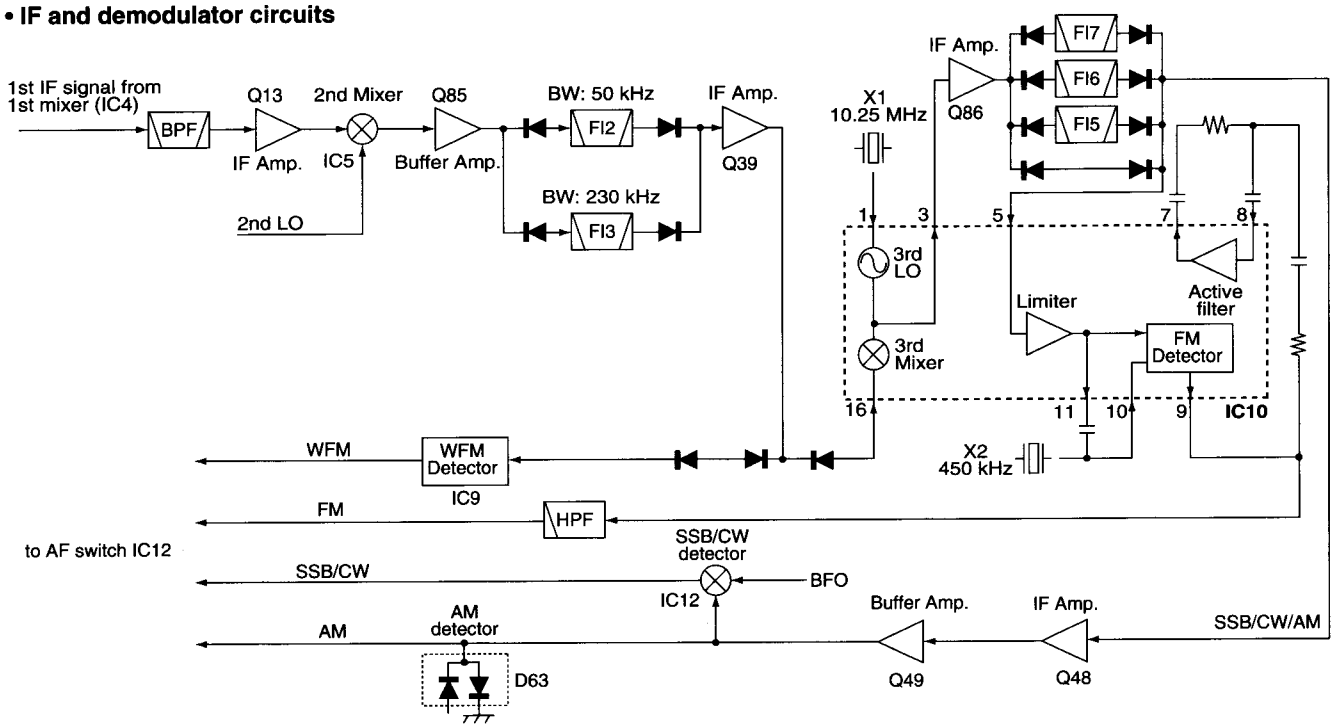

The 10.7 MHz 2nd IF signal from the buffer amplifier (Q39) is applied to the 3rd mixer section in the FM IF IC (IC10, pin 16). The applied signal is mixed with a 3rd LO signal generated by X1 (10.25 MHz) to produce a 450 kHz 3rd IF signal.

The 3rd IF signal is output from pin 3, and passed through one of 3 bandpass filters (FI5, FI6 or FI7) or bypassed, according to the selected mode and bandwidth after being amplified at the IF amplifier (Q86). The filtered or bypassed signal is applied to the each demodulator circuit (except WFM mode).

• Bandpass filter selection

Modes	Bandpass filter	Passband width
AM, SSB, CW	FI5	2.8 kHz
FM, AM, SSB, CW	FI6	6 kHz
FM, AM	FI7	15 kHz

4-1-8 DEMODULATOR CIRCUITS (RF UNIT)

The demodulator circuit converts the 2nd IF signal into AF signals. 4 separate demodulator circuits are employed for each mode.

(1) WFM mode

The 10.7 MHz 2nd IF signal from the buffer amplifier (Q39) is applied to the WFM demodulator circuit (IC9, pin 2).

The applied IF signal is amplified at the IF amplifier section in the IC9 and then output from pin 10. The output signal is applied to the quadrature detector section (pin 11) to demodulate AF signals. The demodulated AF signals are applied to the AF switch circuit via the de-emphasis circuit (R179, C285).

(2) FM mode

The filtered or bypassed 3rd IF signal is applied to the quadrature detector section in the FM IF IC (IC10, pin 10) then mixed with the signal generated by the discriminator (X2) to demodulate AF signals. The AF signals are output from pin 9 and applied to the AF switch circuit via the high-pass filter circuit (IC11).

(3) AM mode

The filtered 3rd IF signal from the one of 3 bandpass filters (FI5, FI6 or FI7) is amplified at the IF and buffer amplifiers (Q48, Q49). The amplified IF signal is applied to the AM detector circuit (D63) to be converted into AF signals, and the AF signals are applied to the AF switch circuit.

(4) SSB and CW modes

The amplified 3rd IF signal from the buffer amplifier (Q49) is applied to the mixer circuit (IC12, pin 6) and mixed with the BFO signal generated by the BFO circuit for demodulation. The demodulated AF signals are applied to the AF switch circuit.

4-1-9 AF SWITCH CIRCUIT (RF UNIT)

The demodulated AF signals from the demodulator circuits are applied to the AF switch (IC14). This consists of 4 analog switches which are selected with a mode signal from the CPU (LOGIC unit; IC1) via the I/O expander (IC3). The switched AF signals are applied to the AF circuit.

4-1-10 AF CIRCUIT (RF AND LOGIC UNITS)

The switched AF signals from the AF switch circuit are amplified at the AF amplifier circuit (RF unit; Q56) and then applied to the LOGIC unit.

The AF signals from the RF unit are applied to the electronic volume control circuit (LOGIC unit; IC9a, pin 1). The level controlled AF signals are output from pin 2 and applied to the AF power amplifier (LOGIC unit; IC10, pin 4). The power amplified AF signals are passed through the AF level control switch (LOGIC unit; S1) then applied to the internal speaker via the [EXT SP] jack.

The electronic volume control circuit controls AF gain, therefore, the AF output level varies according to the [VOL] setting and also the squelch conditions.

4-1-11 SQUELCH CIRCUIT (RF AND LOGIC UNITS)

A squelch circuit cuts out AF signals when no RF signal is received or when the S-meter signal is lower than the [SQUELCH] control setting level. By detecting noise components in the AF signals, the CPU controls the electronic volume control circuit.

• NOISE SQUELCH

Some noise components in the AF signals from pin 9 of the FM IF IC (IC10) are applied to the noise amplifier section in the IC (IC10, pin 8). The amplified signals are output from pin 7, and applied to the electronic volume control circuit (LOGIC unit; IC9b, pin 8) and level controlled noise components are output from pin 7. The output signals are applied to the noise amplifiers (LOGIC unit; Q6, Q7) to be converted into pulse-type signals, then applied to the CPU (LOGIC unit; IC1, pin 39) as an NOIN signal.

• Squelch and AF amplifier circuits

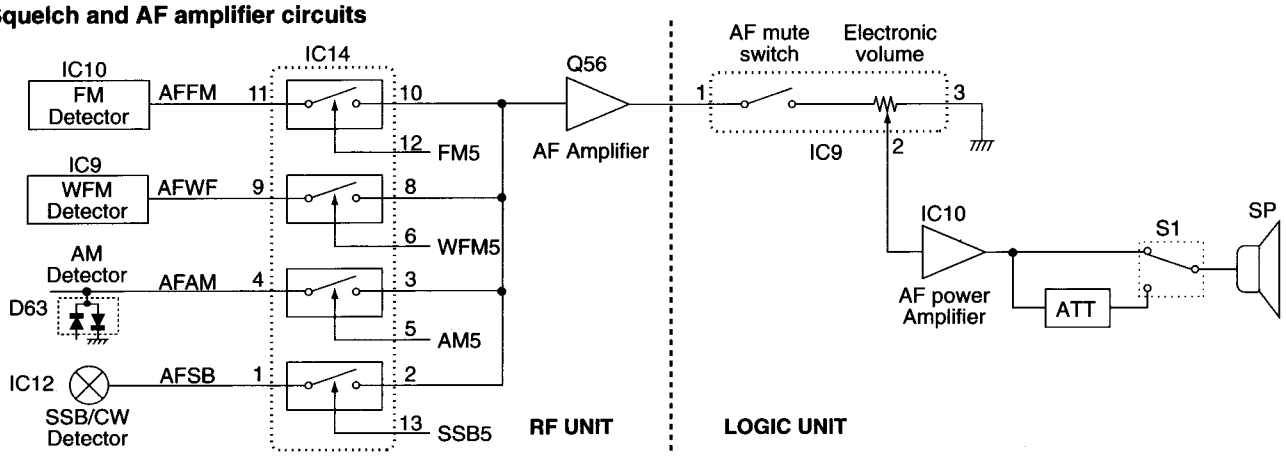

• **S-METER SQUELCH**
The S-meter signal is applied to the CPU from the meter amplifier circuit (RF unit; IC13a) via the SMAD line, and also the S-meter squelch setting level is applied to the CPU. The CPU compares these signals, then outputs a control signal to the electronic volume control circuit (RF unit; IC9a) to cut out AF signals.

4-1-12 NOISE BLANKER CIRCUIT (RF UNIT)
The noise blanker circuit detects pulse-type noise, and stops IF amplifier operation during detection. The noise blanker function activates only when SSB, CW or AM mode is selected.

A portion of the filtered 2nd IF signal from one of 2 bandpass filters (FI2 or FI3) is amplified at the NB amplifier (Q41) then applied to the WFM IF IC (IC9, pin 2). The applied signal is amplified at the IF amplifier section in the IC, then output from pin 10. The output signal is rectified at the NB detector circuit (D53) to be converted into DC voltage after being amplified at the noise amplifier (Q35). The DC voltage is applied to the NB gate control circuit (Q37, Q38) to control the NB gate (Q40).

Some DC voltage is fed back to the IF amplifier section in the WFM IF IC (IC9, pin 3). The IF amplifier functions as an AGC circuit to reduce average noise. Therefore, the noise blanker function shuts off pulse-type noise only.

4-1-13 AGC CIRCUIT (RF UNIT)
The AGC (Auto Gain Control) circuit reduces IF amplifier gain to keep the audio output at a constant level.

An RSSI signal is used for AGC function from the WFM IF IC (IC9, pin 17) while in WFM mode, or used from the FM IF IC (IC10, pin 12) while in FM, AM, SSB or CW (except WFM) mode.

The RSSI output signal is applied to the IF amplifiers (Q13, Q39) after being amplified at the AGC amplifier (Q33) during WFM operation. In other modes, the RSSI signal is amplified at the AGC amplifier (Q51), passes through the time constant circuit (Q52, Q53, R284, R290, R291, C371–C373) and is then applied to the IF amplifiers (Q13, Q39). The AGC control signal is applied to the VHF/UHF tunable bandpass filters after being amplified at the VHF/UHF AGC amplifier (IC13b).

AGC speed is controlled by changing the time constant at the AGC control line with resistors (R284, R290, R291) and capacitors (C371–C373). R290 and C372 are used for AGC slow, and R284 and C371 are used for AGC fast mode's time constant. However, R291 and C373 are connected to the AGC control line while scanning to obtain the fastest AGC response.

4-1-14 VSC CIRCUIT (LOGIC UNIT)
The VSC (Voice Scan Control) detects AF signals and mutes undesired signals such as unmodulated, beat and noise component signals. When the VSC function is ON and an unmodulated signal is received, squelch functions the same as closed (no signal condition) even when it's open, or the scan function resumes for a short period on any scan setting during scanning.

A portion of the AF signals from the AF amplifier (RF unit; Q56) is applied to the VSC control circuit (IC15, pin 16) to detect demodulated signals while the VSC function is ON. When audio (voice) component signals are included in the AF signals, the VSC IC (IC15) outputs a low level signal from pin 13 to the CPU (IC1, pin 45) to release the mute switch (IC9).

4-1-15 S-METER CIRCUIT (RF UNIT)
The S-meter circuit indicates the relative received signal strength while receiving and changes depending on the received signal strength.

A portion of the AGC signal is applied to the meter amplifier circuit (IC13a). The amplified signal is then applied to the CPU (LOGIC unit; IC1, pins 31) as an SMAD signal to drive the S-meter.

The SMAD signal is also used for noise and S-meter squelch operation by comparison with the [SQUELCH] control setting level and received signal strength at the CPU.

4-2 PLL CIRCUITS
4-2-1 1ST LO PLL CIRCUIT (RF UNIT)
The 1st LO circuit generates the 1st LO frequencies, and the signals are applied to the 1st mixer circuit. The 1st LO circuit consists of a VCO-1/2 circuit and PLL IC, etc.

The generated signal from VCO-1 (Q14, Q15) or VCO-2 (Q18, Q19) is applied to the prescaler section in the PLL IC (IC7, pin 11) after being amplified at the buffer amplifiers (IC26, Q27). The applied signal is prescaled in the PLL IC based on the divided ratio (N-data) to produce approx. 50 kHz signals which are applied to the phase detector section.

The generated reference signal from the reference oscillator (X1; 10.25 MHz) is amplified at the buffer amplifiers (Q22, Q42) and is applied to the programmable divider section in the PLL IC (IC7, pin 20). The applied signal is prescaled in the PLL IC based on the divided ratio (1/205) to produce approx. 50 kHz phase signals. The reference phase signals are applied to the phase detector section.

The phase detector section compares 2 of the applied phase signals. The phase detected signals are passed through the charge pump section and then output from pin 6 of the PLL IC. The output signals are applied to the loop filter circuit (Q25, Q26) to be converted into DC voltage as a PLL lock voltage. The lock voltage is applied to the CPU (LOGIC unit; IC1, pin 33) as an L1AD signal to control the VHF/UHF tunable bandpass filter.

4-2-2 2ND LO PLL CIRCUIT (RF UNIT)
The 2nd LO circuit generates the 2nd LO frequencies, and the signals are applied to the 2nd mixer circuit. The 2nd LO circuit consists of a DDS, VCO-3 and loop filter circuit, etc.

The generated signal from VCO-3 (Q76) is divided by 8 at the divider circuit (IC23) after being amplified at the buffer amplifier (Q77). The divided signal is then amplified at IC28, and applied to the DDS circuit (IC18). The DDS circuit generates digital signals using the applied signal as a clock frequency. The phase detector section in the DDS IC compares

it's phase with the divided reference frequency (3.41 MHz) which is generated at the reference oscillator (X1).

The D/A converter (R351–R374), bandpass filter (L117, L118, L175, C496–C503) and buffer amplifier (IC19) circuits are connected to the DDS output to convert the digital oscillated signals into smooth analog signals.

4-2-3 BFO CIRCUIT (RF UNIT)

The BFO signals are generated by the DDS circuit (IC25) using the divided reference signal. 10-bit digital signals are converted into 447.3–452.7 kHz analog wave signals at the D/A converter (R423–R442). The converted analog wave signals are passed through the bandpass filter (L99–L101, C269–C274) via the switching diode (D52), then applied to the mixer circuit (IC12).

4-3 SCOPE CIRCUIT

4-3-1 SCOPE RECEIVER CIRCUIT (RF UNIT)

A portion of the 10.7 MHz 2nd IF signal from the 2nd mixer circuit (IC5) passes through the bandpass filter (FI8) to suppress out-of-band signals, and is then mixed with a scope LO signal at the mixer section in the FM IF IC (IC8, pin 15), which includes the RSSI terminal, to produce a 450 kHz scope IF signal. The mixed IF signal is filtered at the ceramic bandpass filter (FI4) then applied to the limiter amplifier section in the FM IF IC (IC8, pin 5). The applied IF signal is converted into DC voltages according to the applied IF signal strength at the RSSI section in the IC.

The converted voltages are applied to the CPU (LOGIC unit; IC1, pin 34) as an SCAD signal.

The sweeping scope LO signals generated by IC25 (10.05–10.35 MHz/11.25–11.35 MHz) are applied to the mixer section in the FM IF IC, when the scope function is activated.

4-4 POWER SUPPLY CIRCUITS

4-4-1 VOLTAGE LINES (LOGIC UNIT)

Line	Description
ACHV	The voltage from a DC power supply.
HV	The same voltage as the ACHV line which is controlled by the [POWER] switch.
RF+5	Common 5 V line converted from the HV line by the RF+5 regulator circuit (IC5).
RF+8	Common 8 V line converted from the HV line by the RF+8 regulator circuit (IC6).
RF33	Common 33 V line converted from the HV line by the 33 V DC-DC convertor circuit (IC7). The output voltage is applied to the PLL circuit (RF unit).
RF–5	Common –5 V line converted from the RF+8 line by the –5 V DC-DC convertor circuit (IC8).
L+5	Common 5 V line converted from the HV line by the L+5 regulator circuit (IC4).

• PLL circuits

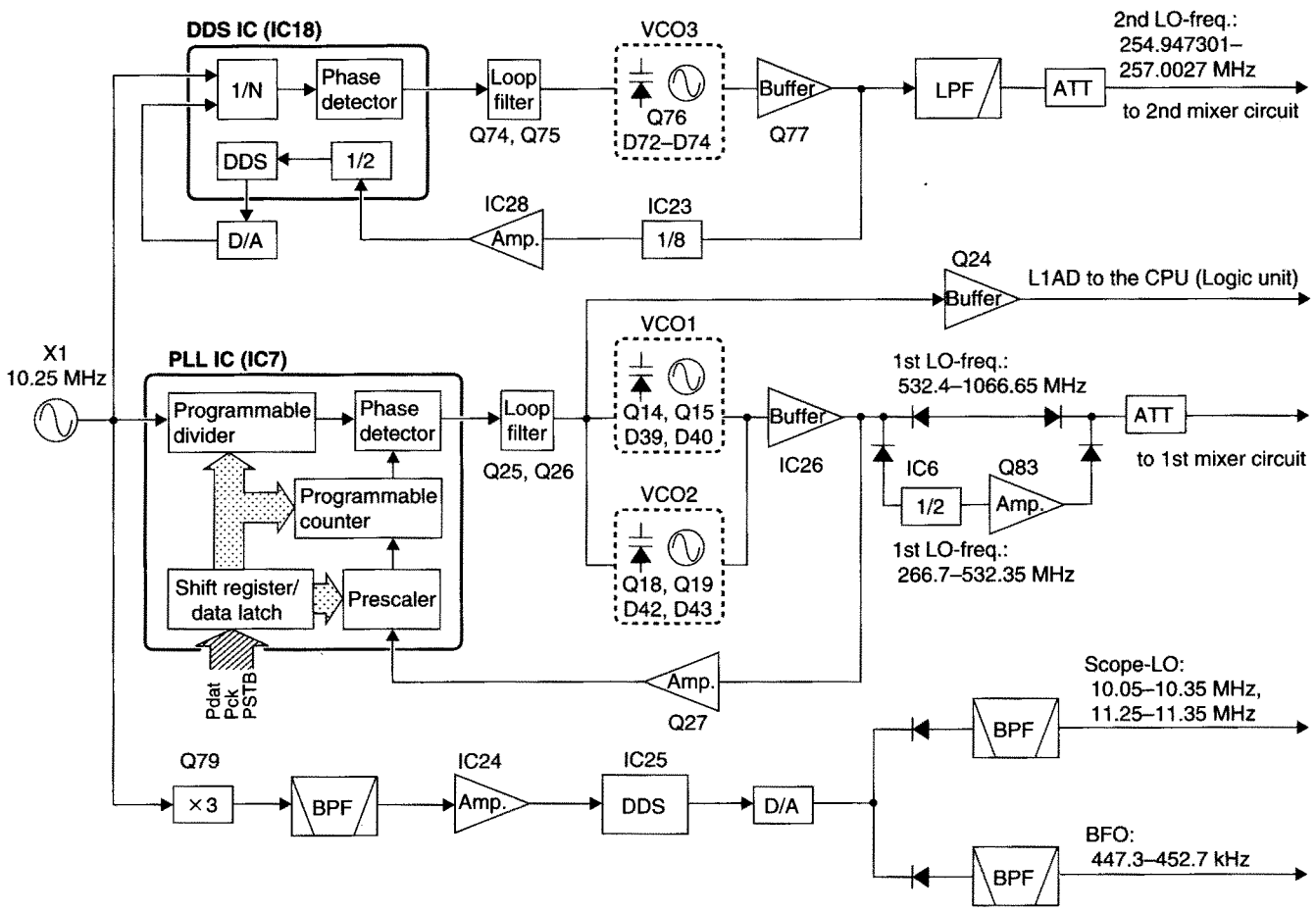

4-5 PORT ALLOCATIONS

4-5-1 CPU (LOGIC unit; IC1)

Pin number	Port name	Description
1	RES	Input port for the reset signal.
2, 3	ETAL, EXTAL	Input ports for the CPU system clock oscillator (X1; 9.8304 MHz).
10	RXD	Input port for data signal from the connected PC via the RS-232C interface IC (IC3).
11	TXD	Outputs data signal to the connected PC via the RS-232C interface IC (IC3).
17	ECK	Outputs clock signal to the EEPROM IC (IC13).
18	EDAT	Outputs data signal to the EEPROM IC (IC13).
21	DSTD	Input port for the DTMF latch data.
22–25	DQ4–DQ1	Input ports for the DTMF decode signals.
27	Mck	Outputs serial clock signal for the electronic volume IC (IC9) and output expander ICs (RF unit; IC1– IC3).
28	Mdat	Outputs serial data signal for the electronic volume IC (IC9) and output expander ICs (RF unit; IC1– IC3).
31	SMAD	Input port for S-meter signal.
32	CMAD	Input port for center indicator signal.
33	L1AD	Input port for 1st LO PLL lock voltage.
34	SCAD	Input port for the scope signal.
35	CTAD	Input port for the CTCSS decoded signal.
36	REDA	Output port for reference frequency control voltage.
37	TUDA	Outputs tunable bandpass filter control voltage.
39	NOIN	Input port signal strength detection signal (NOIN; pulse-type).
40	LCT	Input port for unlock signal from the PLL IC (RF unit; IC7). High : PLL unlock
41	POCO	Outputs power switching circuit control signal. High: While turning power ON.
43	VSSW	Output VSC-time constant control signal. High: Modulated signals are received. Low : Unmodulated or beat signals are received or while scanning.
44	VSON	Outputs VSC control signals. Low : When the VSC function is ON.
45	VSC	Input port for VSC detected signals. High: Unmodulated or beat signals are received. Low : Modulated signals are received.
46	AFST	Outputs strobe signals for the volume control IC (IC9).
48–50	CON2–CON0	Output mode control signals for the 2nd LO DDS IC (RF unit; IC18).

CPU (IC1) — continued

Pin number	Port name	Description
51	STD2	Outputs strobe signals for the BFO/scope DDS IC (RF unit; IC25).
52	STD1	Outputs strobe signals for the 2nd LO DDS IC (RF unit; IC18).
53	PSTB	Outputs strobe signals for the PLL IC (RF unit; IC7).
54	Pdat	Outputs serial data signals for the PLL IC (RF unit; IC7) and DDS ICs (RF unit; IC18, IC25).
55	Pck	Outputs serial clock signal for the PLL IC (RF unit; IC7) and DDS ICs (RF unit; IC18, IC25).
58–60	MST3–MST1	Outputs strobe signals for the output expander ICs (RF unit; IC1–IC3).
61	DRES	Outputs reset signal for the DDS ICs (RF unit; IC18, IC25).

4-5-2 DDS (RF unit; IC18)

Pin number	Port name	Description
68	PFIL4	Outputs scope LO select signals. High: When Scope function is ON.
69	PFIL3	Outputs BFO select signals. High: When SSB or CW mode is selected.
70	PFIL2	Outputs 1st LO filter select signals. High: When frequencies from 0.01 to 265.699999 MHz are displayed. Low : When frequencies from 265.7 to 1300.0 MHz are displayed.
72	VSFT2	Outputs VCO2 shift signals.
73, 75	VCO2, VCO1	Output VCO2/VCO1 select signals.

Display freq. [MHz]	Selected VCO	VCO freq. [MHz]
0.01–108.299999	VCO1	533.40–749.90
108.3–265.699999	VCO2	750.00–1064.70
265.7–266.699999	VCO1	533.40–534.35
266.7–267.699999	VCO1	532.40–533.35
267.7–483.299999	VCO1	534.40–749.95
483.3–799.999999	VCO2	750.00–1066.65
800.0–1016.699999	VCO1	533.30–749.95
1016.7–1300.000000	VCO2	750.00–1033.300000

Pin number	Port name	Description
74	VSFT1	Outputs VCO1 shift signals.

4-5-3 OUTPUT EXPANDER IC

(1) RF unit; IC1

Pin number	Port name	Description
4	B0C	Outputs low-pass filter select signal. High: When frequencies below 1.8 MHz are displayed.
5	B1C	Outputs bandpass filter select signal. High: When frequencies from 1.8 to 14.999999 MHz are displayed.
6	B2C	Outputs bandpass filter select signal. High: When frequencies from 15.0 to 29.999999 MHz are displayed.
7	B3C	Outputs bandpass filter select signal. High: When frequencies from 30.0 to 49.999999 MHz are displayed.
11	B7C	Outputs bandpass filter select signal. High: When frequencies from 700.0 to 1300.0 MHz are displayed.
12	B6C	Outputs bandpass filter select signal. High: When frequencies from 350.0 to 699.999999 MHz are displayed.
13	B5C	Outputs bandpass filter select signal. High: When frequencies from 150.0 to 349.999999 MHz are displayed.
14	B4C	Outputs bandpass filter select signal. High: When frequencies from 50.0 to 149.999999 MHz are displayed.

(2) RF unit; IC2

Pin number	Port name	Description
4	NB	Outputs NB control signals. High: While NB fuction is ON. (SSB/CW mode only)
5	AGCF	Outputs AGC time constant control signals. High: When WFM or FM mode is selected (AGC-fast).
7	SCAN	Outputs AGC time constant control signals. High: While scanning (fastest AGC speed).
12, 13	FL5, FL4	Output 10.7 MHz IF filter select signals. SW signal / Bandpass filter / Passband width FL4 / FI2 / 50 kHz FL5 / FI3 / 230 kHz
14	ATTC	Outputs attenuator control signals. High: When attenuator function is ON.

(3) RF unit; IC3

Pin number	Port name	Description
4	WFM	Outputs WFM mode select signals. High: When WFM mode is selected.
5	FM	Outputs FM mode select signals. High: When FM mode is selected.
6	AM	Outputs AM mode select signals. High: When AM mode is selected.
7	SSB	Outputs SSB mode select signals. High: When SSB mode is selected.
11–14	FL3–FL0	Output 450 kHz IF filter select signals. SW signal / Bandpass filter / Passband width FL0 / FI5 / 2.8 kHz FL1 / FI6 / 6 kHz FL2 / FI7 / 15 kHz FL3 / By-pass / —

SECTION 5 ADJUSTMENT PROCEDURES

5-1 PREPARATION BEFORE SERVICING

The receiver (IC-PCR1000) can be adjusted by sending adjustment data to the RS-232C port via a PC. Most of the adjustments in this section must use **EX-2099,** an adjustment program for IC-PCR1000. The software that comes with the IC-PCR1000 is not necessary for adjustments in this section.

■ SYSTEM REQUIREMENTS

- IBM PC compatible computer
- An RS-232C serial port (38400 bps or faster)
- Microsoft Windows 95
- Intel i486DX4 processor or faster (pentium 100 MHz or faster recommended)
- At least 16 MB RAM
- At least 10 MB of hard disk space
- 640 × 480 pixel display (800 × 600 pixel display recommended)

■ SOFTWARE INSTALLATION

NOTE: Before using the program, make a backup copy of the original disk. After making a backup copy, keep the original disk in a safe place.

① Boot up Windows.
- Quit all applications when Windows is running.

② Insert the backup disk 1 into the appropriate floppy drive.
③ Select 'Run' from the [Start] menu.
④ Type the setup program name using the full path name, then push the [Enter] key. (A:\ setup [Enter])
⑤ Follow the prompts.
⑥ Program group 'IC-PCR1000' appears in the 'Programs' folder of the [Start] menu.

■ OPERATING INSTRUCTIONS

The adjustment program window contains 3 panels; the Power Panel, Control Panel and Adjustment Panel. The Power Panel will appear at start up the program.

① Connect IC-PCR1000 and PC with an RS-232C serial cable.
② Boot up Windows.
③ Click the "EX-2099 for IC-PCR1000" in the program group 'IC-PCR1000' to start the program.
- The Power Panel appears.

④ Click "POWER ON" on the Power panel.
- Control Panel and Adjustment Panel appear.

⑤ Click "START" on the Adjustment Panel when starting the SOFTWARE adjustment.
- Data panel appears at the bottom side of the Adjustment panel.

⑥ Click "Read ALL DATA" on the Adjustment Panel.
- Application reads adjustment data of the connected receiver.

⑦ Set or modify adjustment data as desired. See the following SOFTWARE adjustments.

IBM is a registered trademark of International Business Machines Corporation in the U.S.A and other countries. Microsoft and Windows are registered trademarks of Microsoft Corporation in the U.S.A and other countries. Screen shots produced with permission from Microsoft Corporation. All other products or brands are registered trademarks or trademarks of their respective holders.

■ BASIC CONNECTION

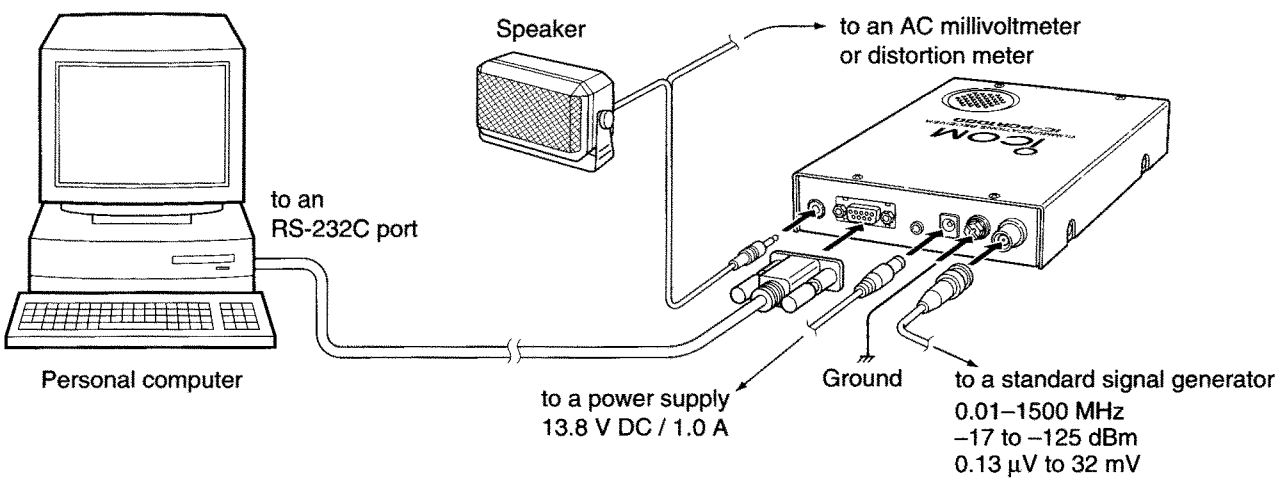

■ PANEL DESCRIPTIONS

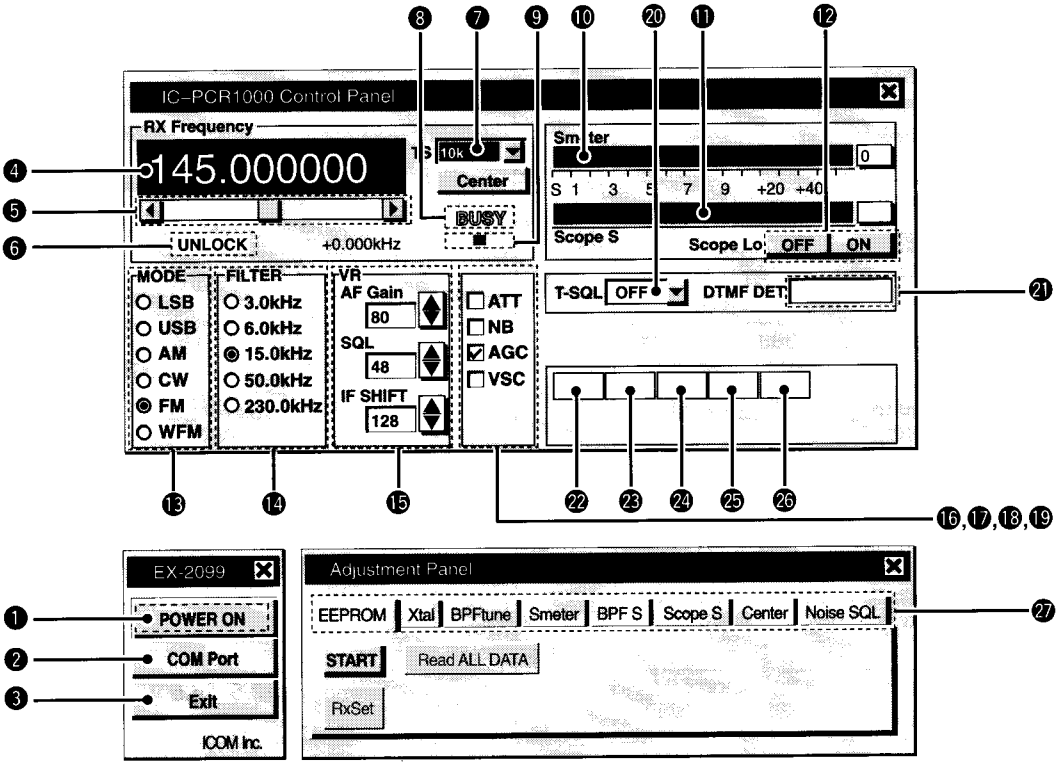

♦ POWER PANEL

❶ **POWER button**
Turns IC-PCR1000 on and off.

❷ **COM port button**
Used to select a COM port.

❸ **EXIT button**
Quits the program.

♦ CONTROL PANEL

❹ **FREQENCY indication**
Indicates or inputs the receive frequency.

❺ **FREQUENCY scroll bar**
Used to change the receive frequency. Moving the button to the right increases the frequency; to the left decreases the frequency.

❻ **UNLOCK indicator**
Appears when the PLL is unlocked.

❼ **Tuning step button**
Used to change the tuning step.

❽ **BUSY indicator**
Appears when receiving a signal or when signal noise opens the squelch.

❾ **FM center indicator**
Indicates the tuning level when selecting the 6 kHz or 15 kHz IF filter in FM mode.

❿ **S-meter indicator**
Indicates the receive signal strength.

⓫ **Scope S indicator**

⓬ **Scope Lo (ON/OFF) button**

⓭ **Receive mode** buttons
Select a receive mode.

⓮ **FILTER (IF filter) buttons**
Change the IF filter in use.

⓯ **Volume buttons**
Adjust the audio output, squelch level and set the signals passband position.

⓰ **ATT (Attenuator) button**
Turns the attenuator on and off.

⓱ **NB (Noise Blanker) button**
Turns the noise blanker function on and off. The noise blanker is used to reduce pulse type noise.

⓲ **AGC (Automatic Gain Control) button**
Turns the AGC function on and off.

⓳ **VSC (Voice Scan Control) button**
Turns the voice scan control function on and off. This function detects whether signals are modulated (contain voice or music components, etc.) or not.

⓴ **T-SQL (Tone squelch) button**
Indicates or selects tone frequency for the tone squelch.

㉑ **DTMF decode indicator**
Indicates the decoded DTMF signals.

㉒ **AD1 (SMAD) indicator**
Indicates voltage level for the S-meter.

㉓ **AD2 (CMAD) indicator**
Indicates voltage level for the center meter.

㉔ **AD3 (L1AD) indicator**
Indicates the 1st LO PLL lock voltage level.

㉕ **AD4 (SCAD) indicator**
Indicates voltage level for the scope signal.

㉖ **AD5 (CTAD) indicator**
Indicates voltage level for the CTCSS decoded signal.

♦ ADJUSTMENT PANEL

㉗ **Item select buttons**
Used to select the adjustment items.

5-2 PLL ADJUSTMENT AND IF PEAK ADJUSTMENT

ADJUSTMENT		ADJUSTMENT CONDITION	MEASUREMENT		VALUE	ADJUSTMENT
			UNIT	LOCATION		
REFERENCE FREQUENCY	1	• Display freq. : Any	RF	Connect a frequency counter to check point CP4.	10.250000 MHz	Use the adjustment software. **(see page 5-6)**
1ST LO PLL LOCK VOLTAGE	1	• Display freq. : 265.7000 MHz	RF	Connect a digital multi-meter or oscilloscope to check point CP2.	2.0–6.0 V	Verify
	2	• Display freq. : 383.2000 MHz			13.5–17.7 V	
	3	• Display freq. : 383.3000 MHz			3.0–7.0 V	
	4	• Display freq. : 483.2000 MHz			10.0–14.0 V	
	5	• Display freq. : 483.3000 MHz			1.5–5.5 V	
	6	• Display freq. : 633.2000 MHz			12.5–16.5 V	
	7	• Display freq. : 633.3000 MHz			4.0–8.0 V	
	8	• Display freq. : 799.9000 MHz			12.5–16.5 V	
2ND LO PLL LOCK VOLTAGE	1	• Display freq. : 265.0000 MHz	RF	Connect a digital multi-meter or oscilloscope to check point CP3.	6.5–10.5 V	Verify
	2	• Display freq. : 266.0000 MHz			6.6–10.6 V	
	3	• Display freq. : 267.0000 MHz			6.4–10.4 V	
LCT TERMINAL	1	• Display freq. : Any frequency of the 1st LO and 2nd LO are locked.	RF	Connect a digital multi-meter or oscilloscope to check point CP9.	Less than 1.5 V	Verify
IF PEAK	1	• Display freq. : 130.0200 MHz • Mode : FM • AGC : ON • Filter : 15 kHz • R521 (RF unit) : Center • R523 (RF unit) : Center • Connect a standard signal generator to [ANT] and set as: Frequency : 130.0200 MHz Level : 50 μV* (–73 dBm) Modulation : OFF • Receiving			Maximum S-meter level	Use the adjustment software. **(see page 5-6, Tuned BPF)**
	2	• Display freq. : 149.9800 MHz • Set an SSG as : Frequency : 149.9800 MHz • Receiving				

*This output level of a standard signal generator (SSG) is indicated as SSG's open circuit.

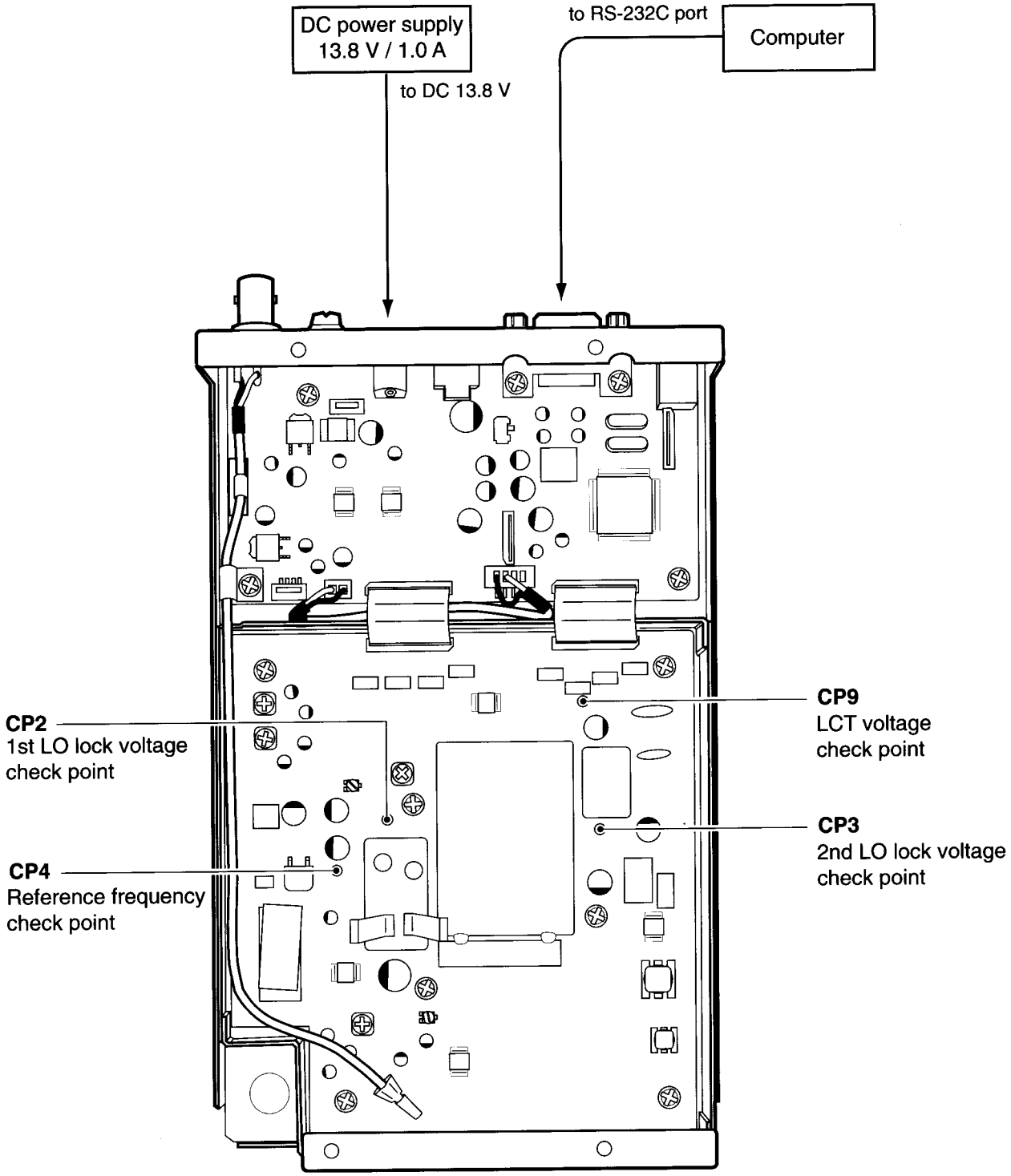
DC power supply
13.8 V / 1.0 A
to DC 13.8 V
to RS-232C port
Computer
CP2
1st LO lock voltage
check point
CP4
Reference frequency
check point
CP9
LCT voltage
check point
CP3
2nd LO lock voltage
check point

5-3 RECEIVE ADJUSTMENT

ADJUSTMENT		ADJUSTMENT CONDITION	MEASUREMENT		VALUE	ADJUSTMENT POINT	
			UNIT	LOCATION		UNIT	ADJUST
TOTAL GAIN	1	• Display freq. : 149.97000 MHz • Mode : USB • Filter : 3.0 kHz • Set an SSG as : Frequency : 149.97015 MHz Level : 1.8 μV* (–102 dBm) Modulation : OFF • Receiving	Rear Panel	Connect an AC millivoltmeter to the [EXT SP] jack with an 8 Ω dummy load.	Maximum AF level	RF	L112
	2	• Display freq. : 149.97000 MHz • Mode : FM • Filter : 15.0 kHz • Set an SSG as : Mode : FM Level : 1.0 mV* (–47 dBm) Modulation : 1 kHz Deviation : 3.5 kHz • Receiving			Any AF level	Computer display	AF Gain
	3	• Display freq. : 149.97015 MHz • Mode : USB • Filter : 3.0 kHz • Set an SSG as : Level : 1.0 mV* (–47 dBm) Modulation : OFF • Receiving			Same AF level as step 2	RF	R523
	4	• Set an SSG as : Level : OFF • Receiving			20 dB of AF level difference as step 3		R521
WFM RECEIVER	1	• Display freq. : 149.97000 MHz • Mode : WFM • Filter : 230.0 kHz • Set an SSG as : Mode : FM Level : 1.0 μV* (–47 dBm) Modulation : 1 kHz Deviation : 75 kHz • Receiving	Rear Panel	Connect a distortion meter to the [EXT SP] jack with an 8 Ω dummy load.	Minimum distortion level	RF	L106
NOISE BLANKER	1	• Display freq. : 149.97000 MHz • Mode : USB • Filter : 3.0 kHz • NB : ON • Apply the following noise signal to the [ANT] connector. 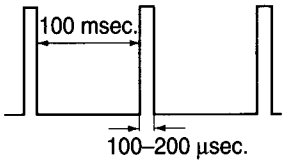 • Receiving	Rear Panel	Connect an oscilloscope to the [EXT SP] jack with an 8 Ω dummy load.	Minimum noise level	RF	L107

*This output level of a standard signal generator (SSG) is indicated as SSG's open circuit.

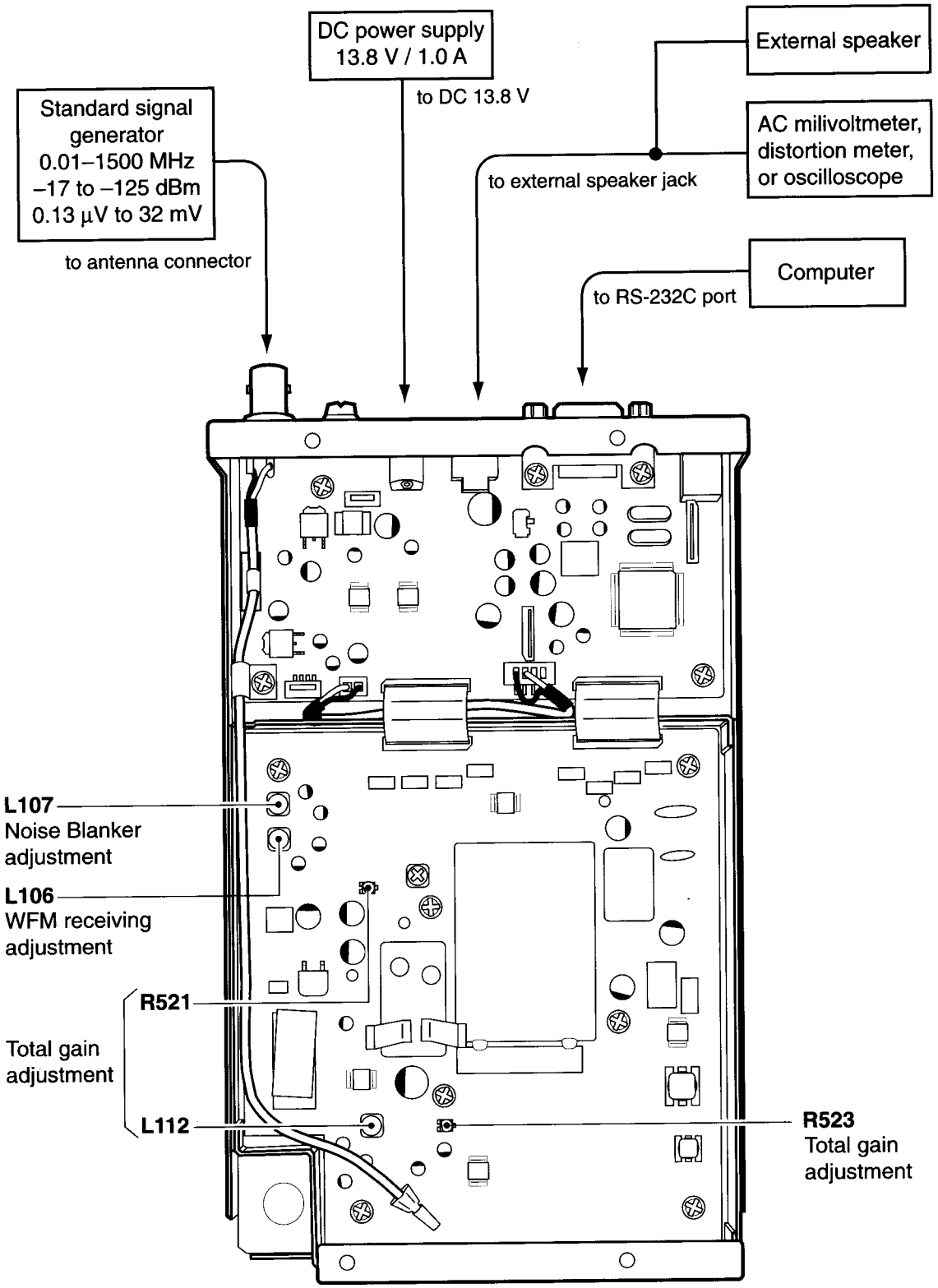
DC power supply
13.8 V / 1.0 A
to DC 13.8 V
External speaker
Standard signal generator
0.01–1500 MHz
–17 to –125 dBm
0.13 µV to 32 mV
to antenna connector
AC milivoltmeter, distortion meter, or oscilloscope
to external speaker jack
Computer
to RS-232C port
L107
Noise Blanker adjustment
L106
WFM receiving adjustment
R521
Total gain adjustment
L112
R523
Total gain adjustment

5-4 SOFTWARE ADJUSTMENT

ADJUSTMENT		ADJUSTMENT CONDITION	OPERATION
REFERENCE FREQUENCY	1	• Click adjustment item [Xtal] on the Adjustment Panel. • Connect a frequency counter to check point CP4 on the RF unit **(see page 5-4)**.	• Click "▲" or "▼" to set reference frequency to 10.250000 MHz.
TUNED BPF	1	• Click adjustment item [BPFtune] on the Adjustment Panel. • Select "BPF 4-1" at the left side of Adjustment Panel. • Manual/Auto Tune : Manual • Set an SSG as : Frequency : 50.02 MHz Level : 50 μV* (–73 dBm) Modulation : OFF • Receiving	• Move the scroll bar at the bottom side of Adjustment Panel, and set maximum S-meter level on the Control Panel. • Then, click "Write" switch to store into memory.
	2	• Same operation as step 1 for the listed frequencies. BPF 4-2 – 58.28 MHz BPF 4-3 – 58.32 MHz BPF 4-4 – 88.02 MHz BPF 4-5 – 108.28 MHz BPF 4-6 – 108.32 MHz BPF 4-7 – 130.02 MHz BPF 4-8 – 149.98 MHz BPF 5-1 – 150.02 MHz BPF 5-2 – 183.28 MHz BPF 5-3 – 183.32 MHz BPF 5-4 – 216.02 MHz BPF 5-5 – 265.68 MHz BPF 5-6 – 265.72 MHz BPF 5-7 – 300.02 MHz BPF 5-8 – 349.98 MHz BPF 6-1 – 350.02 MHz BPF 6-2 – 383.28 MHz BPF 6-3 – 383.32 MHz BPF 6-4 – 433.32 MHz BPF 6-5 – 483.28 MHz BPF 6-6 – 483.32 MHz BPF 6-7 – 558.32 MHz BPF 6-8 – 633.28 MHz BPF 6-9 – 633.32 MHz BPF 6-10 – 699.98 MHz BPF 7-1 – 700.02 MHz BPF 7-2 – 750.02 MHz BPF 7-3 – 799.98 MHz BPF 7-4 – 800.02 MHz BPF 7-5 – 916.68 MHz BPF 7-6 – 916.72 MHz BPF 7-7 – 1016.68 MHz BPF 7-8 – 1016.72 MHz BPF 7-9 – 1166.68 MHz BPF 7-10 – 1166.72 MHz BPF 7-11 – 1299.98 MHz • Receiving	
S-METER	1	• Click adjustment item [Smeter] on the Adjustment Panel. • Select "FM S0" at the left side of Adjustment Panel. • Set an SSG as : Frequency : 149.97000 MHz Mode : FM Level : 0.5 μV* (–113 dBm) Modulation : OFF • Receiving	• Click "Write" switch to store sampled data into memory.
	2	• Same operation as step 1 for the listed levels. • Set an SSG as: FM S3 : 1.3 μV* (–105 dBm) FM S5 : 3.2 μV* (–97 dBm) FM S7 : 13 μV* (–85 dBm) FM S9 : 50 μV* (–73 dBm) FM S9+20 : 280 μV* (–58 dBm) FM S9+40 : 1.6 mV* (–43 dBm) FM S9+60 : 8.9 mV* (–28 dBm) WFM S0 : 0.79 μV* (–109 dBm) WFM S3 : 1.6 μV* (–103 dBm) WFM S5 : 3.2 μV* (–97 dBm) WFM S7 : 13 μV* (–85 dBm) WFM S9 : 50 μV* (–73 dBm) WFM S9+20 : 280 μV* (–58 dBm) WFM S9+40 : 1.6 mV* (–43 dBm) WFM S9+60 : 8.9 mV* (–28 dBm) • Receiving	
S-METER FLAT	1	• Click adjustment item [BPF S] on the Adjustment Panel. • Select "BPF0" at the left side of Adjustment Panel. • Set an SSG as : Frequency : 1.02 MHz Level : 50 μV* (–73 dBm) Modulation : OFF • Receiving	• Click "Write" switch to store sampled data into memory.

*This output level of a standard signal generator (SSG) is indicated as SSG's open circuit.

SOFTWARE ADJUSTMENT (continued)

ADJUSTMENT		ADJUSTMENT CONDITION	OPERATION
S-METER FLAT	2	• Same adjustment as step 1 for the listed BPFs frequencies. BPF 1 – 7.02 MHz BPF 2 – 21.02 MHz BPF 3 – 40.02 MHz BPF 4-1 – 50.02 MHz BPF 4-2 – 58.28 MHz BPF 4-3 – 58.32 MHz BPF 4-4 – 88.02 MHz BPF 4-5 – 108.28 MHz BPF 4-6 – 108.32 MHz BPF 4-7 – 130.02 MHz BPF 4-8 – 149.98 MHz BPF 5-1 – 150.02 MHz BPF 5-2 – 183.28 MHz BPF 5-3 – 183.32 MHz BPF 5-4 – 216.02 MHz BPF 5-5 – 265.68 MHz BPF 5-6 – 265.72 MHz BPF 5-7 – 300.02 MHz BPF 5-8 – 349.98 MHz BPF 6-1 – 350.02 MHz BPF 6-2 – 383.28 MHz BPF 6-3 – 383.32 MHz BPF 6-4 – 433.32 MHz BPF 6-5 – 483.28 MHz BPF 6-6 – 483.32 MHz BPF 6-7 – 558.32 MHz BPF 6-8 – 633.28 MHz BPF 6-9 – 633.32 MHz BPF 6-10 – 699.98 MHz BPF 7-1 – 700.02 MHz BPF 7-2 – 750.02 MHz BPF 7-3 – 799.98 MHz BPF 7-4 – 800.02 MHz BPF 7-5 – 916.68 MHz BPF 7-6 – 916.72 MHz BPF 7-7 – 1016.68 MHz BPF 7-8 – 1016.72 MHz BPF 7-9 – 1166.68 MHz BPF 7-10 – 1166.72 MHz BPF 7-11 – 1299.98 MHz • Receiving	
SCOPE S	1	• Click adjustment item [Scope S] on the Adjustment Panel. • Select "S0" at the left side of Adjustment Panel. • Mode : FM • Filter : 15.0 kHz • Set an SSG as : Frequency : 149.97000 MHz Level : 0.32 μV* (–117 dBm) Modulation : OFF • Receiving	• Click "Write" switch to store sampled data into memory.
	2	• Same operation as step 1 for the listed levels. • Set an SSG as : S3 : 3.2 μV* (–97 dBm) S5 : 10 μV* (–87 dBm) S7 : 32 μV* (–77 dBm) S9 : 100 μV* (–67 dBm) S9+20 : 320 μV* (–57 dBm) S9+40 : 1.0 mV* (–47 dBm) S9+60 : 3.2 mV* (–37 dBm) • Receiving	
CENTER INDICATOR	1	• Click adjustment item [Center] on the Adjustment Panel. • Select "CW low" at the left side of Adjustment Panel. • Set an SSG as : Frequency : 149.96700 MHz Level : 50 μV* (–73 dBm) Modulation : OFF • Receiving	• Click "Write" switch to store sampled data into memory.
	2	• Select "CW high" at the left side of Adjustment Panel. • Set an SSG as : Frequency : 149.97300 MHz • Receiving	• Click "Write" switch to store sampled data into memory.
NOISE SQUELCH	1	• Click adjustment item [Noise SQL] on the Adjustment Panel.	• Click each "Write" switch for Timing and Level.
	2	• Set an Adjustment panel as: Timing : T2 — 2 T3 — 100 Level : Thresh — 20 Tight — 20	• Click "▼" then "Write" switches at 'Level' to set Thresh/Tight data until noise disappears. **NOTE**: "Write" switch must be clicked at each level, otherwise the level is invalid.
	3	• Set an Adjustment panel as: Timing : T2 — 2 T3 — 4	• Click "Write" switch for Timing.

*This output level of a standard signal generator (SSG) is indicated as SSG's open circuit.

SECTION 6 PARTS LIST

[LOGIC UNIT]

REF NO.	ORDER NO.	DESCRIPTION	
IC1	1140007000	S.IC	HD6433334YL04F
IC2	1130004330	S.IC	LC7385M
IC3	1120002510	S.IC	DS14C232TM
IC4	1180000970	S.IC	AN78L05M-(E1)
IC5	1180001070	S.IC	TA7805F (TE16L)
IC6	1180001250	S.IC	TA7808F (TE16L)
IC7	1110002350	S.IC	BA6161F
IC8	1110001400	S.IC	μPC1555G2-T1
IC9	1110004490	S.IC	M62429FP 700C
IC10	1110001810	S.IC	TA7368F (TP1)
IC11	1120002170	S.IC	M5223FP
IC12	1110004450	S.IC	PST592DMT
IC13	1140004450	S.IC	X24C01AS-3.0T6
IC15	1140006210	S.IC	μPC5023GR-115-GJG-E1
Q1	1520000560	S.TRANSISTOR	2SB1123T-TD
Q2	1590000430	S.TRANSISTOR	DTC144EU T107
Q6	1530003280	S.TRANSISTOR	2SC4211-6-TL
Q7	1530003280	S.TRANSISTOR	2SC4211-6-TL
Q10	1590000720	S.TRANSISTOR	DTA144EU T107
Q11	1590000430	S.TRANSISTOR	DTC144EU T107
Q12	1590000720	S.TRANSISTOR	DTA144EU T107
Q13	1590000720	S.TRANSISTOR	DTA144EU T107
D1	1750000550	S.DIODE	1SS355 TE-17
D2	1710000840	S.DIODE	1SR154-400 TE25
D3	1750000550	S.DIODE	1SS355 TE-17
D5	1750000110	S.DIODE	1SS272 (TE85R)
D6	1730002320	S.ZENER	MA8051-M (TX)
D7	1750000550	S.DIODE	1SS355 TE-17
D8	1750000520	S.DIODE	DAN222TL
D9	1750000520	S.DIODE	DAN222TL
X1	6050009870	S.XTAL	CR-567 (9.8304 MHz)
X2	6050010130	S.XTAL	SMD-49 3.579545 MHz
L1	6200003950	S.COIL	HF50ACC 322513-T
L2	6180002650	COIL	RCR-875D-472K
L3	6200003520	S.COIL	ELJFB 102K-F
L4	6200007420	S.COIL	ELJFC 101K-F 100U
L5	6200007420	S.COIL	ELJFC 101K-F 100U
L6	6200007840	S.COIL	LQN6C101M04
L7	6200003950	S.COIL	HF50ACC 322513-T
L8	6200003950	S.COIL	HF50ACC 322513-T
L9	6200003950	S.COIL	HF50ACC 322513-T
L10	6200003950	S.COIL	HF50ACC 322513-T
R1	7030003520	S.RESISTOR	ERJ3GEYJ 472 V (4.7 kΩ)
R2	7030003520	S.RESISTOR	ERJ3GEYJ 472 V (4.7 kΩ)
R3	7030003520	S.RESISTOR	ERJ3GEYJ 472 V (4.7 kΩ)
R4	7030003600	S.RESISTOR	ERJ3GEYJ 223 V (22 kΩ)
R5	7030003600	S.RESISTOR	ERJ3GEYJ 223 V (22 kΩ)
R6	7030003680	S.RESISTOR	ERJ3GEYJ 104 V (100 kΩ)
R7	7030003680	S.RESISTOR	ERJ3GEYJ 104 V (100 kΩ)
R8	7030003800	S.RESISTOR	ERJ3GEYJ 105 V (1 MΩ)
R9	7030003740	S.RESISTOR	ERJ3GEYJ 334 V (330 kΩ)
R10	7030007990	S.RESISTOR	ERJ12YJ820H (82 Ω)
R12	7030008380	S.RESISTOR	ERJ1WYJ270H (27 Ω)
R13	7030003450	S.RESISTOR	ERJ3GEYJ 122 V (1.2 kΩ)
R16	7030003500	S.RESISTOR	ERJ3GEYJ 332 V (3.3 kΩ)
R17	7030003620	S.RESISTOR	ERJ3GEYJ 333 V (33 kΩ)
R18	7030003220	S.RESISTOR	ERJ3GEYJ 150 V (15 Ω)
R19	7030003320	S.RESISTOR	ERJ3GEYJ 101 V (100 Ω)
R22	7030003560	S.RESISTOR	ERJ3GEYJ 103 V (10 kΩ)
R23	7030003200	S.RESISTOR	ERJ3GEYJ 100 V (10 Ω)
R24	7030003200	S.RESISTOR	ERJ3GEYJ 100 V (10 Ω)
R25	7030003320	S.RESISTOR	ERJ3GEYJ 101 V (100 Ω)
R26	7030003570	S.RESISTOR	ERJ3GEYJ 123 V (12 kΩ)
R27	7030003440	S.RESISTOR	ERJ3GEYJ 102 V (1 kΩ)
R28	7030003640	S.RESISTOR	ERJ3GEYJ 473 V (47 kΩ)
R29	7030003600	S.RESISTOR	ERJ3GEYJ 223 V (22 kΩ)

[LOGIC UNIT]

REF NO.	ORDER NO.	DESCRIPTION	
R30	7030003640	S.RESISTOR	ERJ3GEYJ 473 V (47 kΩ)
R31	7030003560	S.RESISTOR	ERJ3GEYJ 103 V (10 kΩ)
R34	7030003590	S.RESISTOR	ERJ3GEYJ 183 V (18 kΩ)
R35	7030003670	S.RESISTOR	ERJ3GEYJ 823 V (82 kΩ)
R36	7030003520	S.RESISTOR	ERJ3GEYJ 472 V (4.7 kΩ)
R37	7030003640	S.RESISTOR	ERJ3GEYJ 473 V (47 kΩ)
R38	7030003620	S.RESISTOR	ERJ3GEYJ 333 V (33 kΩ)
R39	7030003560	S.RESISTOR	ERJ3GEYJ 103 V (10 kΩ)
R40	7030003320	S.RESISTOR	ERJ3GEYJ 101 V (100 Ω)
R41	7030003580	S.RESISTOR	ERJ3GEYJ 153 V (15 kΩ)
R43	7030003380	S.RESISTOR	ERJ3GEYJ 331 V (330 Ω)
R44	7030003320	S.RESISTOR	ERJ3GEYJ 101 V (100 Ω)
R45	7030003320	S.RESISTOR	ERJ3GEYJ 101 V (100 Ω)
R46	7030003320	S.RESISTOR	ERJ3GEYJ 101 V (100 Ω)
R47	7030003320	S.RESISTOR	ERJ3GEYJ 101 V (100 Ω)
R48	7030008170	S.RESISTOR	ERJ12YJ1R0H (1 Ω)
R49	7030003680	S.RESISTOR	ERJ3GEYJ 104 V (100 kΩ)
R50	7030003460	S.RESISTOR	ERJ3GEYJ 152 V (1.5 kΩ)
R51	7030003710	S.RESISTOR	ERJ3GEYJ 184 V (180 kΩ)
R52	7030003560	S.RESISTOR	ERJ3GEYJ 103 V (10 kΩ)
R53	7030003580	S.RESISTOR	ERJ3GEYJ 153 V (15 kΩ)
R54	7030003740	S.RESISTOR	ERJ3GEYJ 334 V (330 kΩ)
R56	7030003580	S.RESISTOR	ERJ3GEYJ 153 V (15 kΩ)
R57	7030003700	S.RESISTOR	ERJ3GEYJ 154 V (150 kΩ)
R58	7030003580	S.RESISTOR	ERJ3GEYJ 153 V (15 kΩ)
R59	7030003680	S.RESISTOR	ERJ3GEYJ 104 V (100 kΩ)
R60	7030003560	S.RESISTOR	ERJ3GEYJ 103 V (10 kΩ)
R61	7030003560	S.RESISTOR	ERJ3GEYJ 103 V (10 kΩ)
R62	7030003200	S.RESISTOR	ERJ3GEYJ 100 V (10 Ω)
R63	7030007850	S.RESISTOR	ERJ8EN 1001V (1 kΩ)
R64	7030007130	S.RESISTOR	ERJ1WYJ150H (15 Ω)
R65	7030007510	S.RESISTOR	ERJ12YJ270H (27 Ω)
R66	7030003520	S.RESISTOR	ERJ3GEYJ 472 V (4.7 kΩ)
R67	7030003520	S.RESISTOR	ERJ3GEYJ 472 V (4.7 kΩ)
R68	7030003520	S.RESISTOR	ERJ3GEYJ 472 V (4.7 kΩ)
R69	7030003640	S.RESISTOR	ERJ3GEYJ 473 V (47 kΩ)
R70	7030003640	S.RESISTOR	ERJ3GEYJ 473 V (47 kΩ)
R71	7030003800	S.RESISTOR	ERJ3GEYJ 105 V (1 MΩ)
R72	7030003440	S.RESISTOR	ERJ3GEYJ 102 V (1 kΩ)
R73	7030003440	S.RESISTOR	ERJ3GEYJ 102 V (1 kΩ)
R74	7030003560	S.RESISTOR	ERJ3GEYJ 103 V (10 kΩ)
C1	4510004630	S.ELECTROLYTIC	ECEV1CA100SR
C2	4510004630	S.ELECTROLYTIC	ECEV1CA100SR
C3	4510004630	S.ELECTROLYTIC	ECEV1CA100SR
C4	4510004630	S.ELECTROLYTIC	ECEV1CA100SR
C5	4030006900	S.CERAMIC	C1608 JB 1E 103K-T-A
C6	4030006900	S.CERAMIC	C1608 JB 1E 103K-T-A
C7	4030006900	S.CERAMIC	C1608 JB 1E 103K-T-A
C8	4030007020	S.CERAMIC	C1608 CH 1H 120J-T-A
C9	4030007020	S.CERAMIC	C1608 CH 1H 120J-T-A
C10	4030006900	S.CERAMIC	C1608 JB 1E 103K-T-A
C11	4030006900	S.CERAMIC	C1608 JB 1E 103K-T-A
C12	4030011600	S.CERAMIC	C1608 JB 1C 104KT-N
C13	4030011600	S.CERAMIC	C1608 JB 1C 104KT-N
C14	4030006900	S.CERAMIC	C1608 JB 1E 103K-T-A
C15	4030008560	S.CERAMIC	C1608 CH 1H 300J-T-A
C16	4030008560	S.CERAMIC	C1608 CH 1H 300J-T-A
C17	4510004650	S.ELECTROLYTIC	ECEV1EA4R7SR
C18	4030006900	S.CERAMIC	C1608 JB 1E 103K-T-A
C19	4030011600	S.CERAMIC	C1608 JB 1C 104KT-N
C20	4510005300	S.ELECTROLYTIC	ECEV1AA330SR
C23	4510004650	S.ELECTROLYTIC	ECEV1EA4R7SR
C24	4030006900	S.CERAMIC	C1608 JB 1E 103K-T-A
C25	4030011600	S.CERAMIC	C1608 JB 1C 104KT-N
C26	4510005300	S.ELECTROLYTIC	ECEV1AA330SR
C27	4510004650	S.ELECTROLYTIC	ECEV1EA4R7SR
C28	4030006900	S.CERAMIC	C1608 JB 1E 103K-T-A
C29	4030011600	S.CERAMIC	C1608 JB 1C 104KT-N
C30	4510005300	S.ELECTROLYTIC	ECEV1AA330SR
C31	4510006210	S.ELECTROLYTIC	ECEV1VA330UP
C32	4030011600	S.CERAMIC	C1608 JB 1C 104KT-N
C33	4510005360	S.ELECTROLYTIC	ECEV1HA4R7SR
C34	4510005360	S.ELECTROLYTIC	ECEV1HA4R7SR
C35	4030006880	S.CERAMIC	C1608 JB 1H 472K-T-A

S.=Surface mount

[LOGIC UNIT]

REF NO.	ORDER NO.	DESCRIPTION	
C36	4030006880	S.CERAMIC	C1608 JB 1H 472K-T-A
C37	4510005360	S.ELECTROLYTIC	ECEV1HA4R7SR
C42	4030011600	S.CERAMIC	C1608 JB 1C 104KT-N
C43	4030010210	S.CERAMIC	C3216 JB 1C 105M-T-A
C44	4510006220	S.ELECTROLYTIC	ECEV1CA101UP
C45	4030006860	S.CERAMIC	C1608 JB 1H 102K-T-A
C46	4030006900	S.CERAMIC	C1608 JB 1E 103K-T-A
C47	4510004630	S.ELECTROLYTIC	ECEV1CA100SR
C48	4510004630	S.ELECTROLYTIC	ECEV1CA100SR
C49	4550006560	S.TANTALUM	ECST1CY225R
C50	4510006220	S.ELECTROLYTIC	ECEV1CA101UP
C51	4030006900	S.CERAMIC	C1608 JB 1E 103K-T-A
C52	4030012610	S.CERAMIC	C2012 JB 1C 474K-T-A
C53	4510004630	S.ELECTROLYTIC	ECEV1CA100SR
C54	4030006900	S.CERAMIC	C1608 JB 1E 103K-T-A
C55	4030006900	S.CERAMIC	C1608 JB 1E 103K-T-A
C57	4030009000	S.CERAMIC	C2012 JB 1C 224K-T-A
C58	4510006220	S.ELECTROLYTIC	ECEV1CA101UP
C59	4030011600	S.CERAMIC	C1608 JB 1C 104KT-N
C60	4030006860	S.CERAMIC	C1608 JB 1H 102K-T-A
C61	4030007090	S.CERAMIC	C1608 CH 1H 470J-T-A
C62	4550006710	S.TANTALUM	ECST1AX226R
C63	4030011600	S.CERAMIC	C1608 JB 1C 104KT-N
C64	4510006260	S.ELECTROLYTIC	ECEV1AA471UP
C65	4030006860	S.CERAMIC	C1608 JB 1H 102K-T-A
C66	4030006860	S.CERAMIC	C1608 JB 1H 102K-T-A
C68	4030006900	S.CERAMIC	C1608 JB 1E 103K-T-A
C69	4510004630	S.ELECTROLYTIC	ECEV1CA100SR
C70	4030006900	S.CERAMIC	C1608 JB 1E 103K-T-A
C71	4030006860	S.CERAMIC	C1608 JB 1H 102K-T-A
C75	4530000400	S.ARRAY	EZANCE 220M 22P
C76	4530000400	S.ARRAY	EZANCE 220M 22P
C77	4530000400	S.ARRAY	EZANCE 220M 22P
C78	4530000400	S.ARRAY	EZANCE 220M 22P
C79	4530000410	S.ARRAY	EZANCE 471M 470P
C80	4530000420	S.ARRAY	NFA41R10C104
C81	4530000400	S.ARRAY	EZANCE 220M 22P
C82	4530000420	S.ARRAY	NFA41R10C104
C86	4030008650	S.CERAMIC	C1608 JB 1H 332K-T-A
C87	4030009000	S.CERAMIC	C2012 JB 1C 224K-T-A
C88	4030007110	S.CERAMIC	C1608 CH 1H 680J-T-A
C89	4030012610	S.CERAMIC	C2012 JB 1C 474K-T-A
C90	4550006300	S.TANTALUM	ECST1AY475R
C91	4550006680	S.TANTALUM	ECST0JY156R
C92	4030011600	S.CERAMIC	C1608 JB 1C 104KT-N
C93	4030009000	S.CERAMIC	C2012 JB 1C 224K-T-A
C94	4550006300	S.TANTALUM	ECST1AY475R
C95	4550006300	S.TANTALUM	ECST1AY475R
C96	4030011600	S.CERAMIC	C1608 JB 1C 104KT-N
C97	4030009000	S.CERAMIC	C2012 JB 1C 224K-T-A
C98	4030007170	S.CERAMIC	C1608 CH 1H 221J-T-A
C99	4030006880	S.CERAMIC	C1608 JB 1H 472K-T-A
C100	4030009980	S.CERAMIC	C1608 JB 1H 152K-T-A
C101	4030011600	S.CERAMIC	C1608 JB 1C 104KT-N
C102	4030006860	S.CERAMIC	C1608 JB 1H 102K-T-A
C103	4030011600	S.CERAMIC	C1608 JB 1C 104KT-N
C104	4030004750	S.CERAMIC	C2012 JB 1H 103K-T-A
C105	4030006900	S.CERAMIC	C1608 JB 1E 103K-T-A
S1	2220000530	S.SWITCH	SW-161
J1	6510020530	S.CONNECTOR	52808-1890
J2	6510020530	S.CONNECTOR	52808-1890
J3	6510019970	S.CONNECTOR	52808-1090
J4	6510018970	S.CONNECTOR	B4B-PH-SM3-TB
J6	6450001330	CONNECTOR	HSJ1332-01-020
J7	6510019370	S.CONNECTOR	B3B-ZR-SM3-TF
J8	6510020540	CONNECTOR	DELC-J9SAF-23L8
J9	6450000140	CONNECTOR	HSJ0807-01-010
J10	6450000410	CONNECTOR	HEC0470-01-630
J11	6510015540	S.CONNECTOR	B4B-ZR-SM3-TF
J12	6510020520	S.CONNECTOR	52808-1290
W1	7030003860	S.JUMPER	ERJ3GE JPW V except [USA]
W2	7030003860	S.JUMPER	ERJ3GE JPW V [USA]
W3	7030003860	S.JUMPER	ERJ3GE JPW V
W4	7030003860	S.JUMPER	ERJ3GE JPW V
W7	7030003860	S.JUMPER	ERJ3GE JPW V

[LOGIC UNIT]

REF NO.	ORDER NO.	DESCRIPTION	
WS1	8600035990	OTHER	P01×J05LO
EP1	0910049004	PCB	B 5014D

[RF UNIT]

REF NO.	ORDER NO.	DESCRIPTION	
IC1	1130007510	S.IC	BU4094BCFV-E1
IC2	1130007510	S.IC	BU4094BCFV-E1
IC3	1130007510	S.IC	BU4094BCFV-E1
IC4	1110004470	S.IC	μPC2721GV-E1
IC5	1110004470	S.IC	μPC2721GV-E1
IC6	1110004610	S.IC	UPB1508GV-E1
IC7	1130007970	S.IC	MC145190FR2
IC8	1110003200	S.IC	TA31136FN (EL)
IC9	1110004440	S.IC	LA1145M-TE-L
IC10	1110003200	S.IC	TA31136FN (EL)
IC11	1110003800	S.IC	NJM2904V-TE1
IC12	1110003350	S.IC	μPC1037GR-E1 (MS)
IC13	1110003800	S.IC	NJM2904V-TE1
IC14	1130008090	S.IC	BU4066BCFV-E1
IC18	1140003641	S.IC	SC-1246 (L7B1106)
IC19	1130003830	S.IC	TC7S04F (TE85R)
IC23	1110004460	S.IC	UPB1509GV-E1
IC24	1130003830	S.IC	TC7S04F (TE85R)
IC25	1140004550	S.IC	M65343FP/SC1287
IC26	1110004080	S.IC	μPC2709T-E3
IC27	1130004200	S.IC	TC4S66F (TE85R)
IC28	1130003830	S.IC	TC7S04F (TE85R)
Q1	1530003280	S.TRANSISTOR	2SC4211-6-TL
Q2	1590000430	S.TRANSISTOR	DTC144EU T107
Q3	1590000720	S.TRANSISTOR	DTA144EU T107
Q4	1590002010	S.TRANSISTOR	XP1114 (TX)
Q5	1590002010	S.TRANSISTOR	XP1114 (TX)
Q6	1590002010	S.TRANSISTOR	XP1114 (TX)
Q7	1590002010	S.TRANSISTOR	XP1114 (TX)
Q8	1580000630	S.FET	3SK228XR-TL
Q9	1580000630	S.FET	3SK228XR-TL
Q10	1580000630	S.FET	3SK228XR-TL
Q11	1580000630	S.FET	3SK228XR-TL
Q12	1560000720	S.FET	2SK2171-4-TD
Q13	1580000540	S.FET	3SK131-T2-LA
Q14	1530003550	S.TRANSISTOR	2SC5193-T1
Q15	1530003550	S.TRANSISTOR	2SC5193-T1
Q17	1590000680	S.TRANSISTOR	DTC114EU T107
Q18	1530003550	S.TRANSISTOR	2SC5193-T1
Q19	1530003550	S.TRANSISTOR	2SC5193-T1
Q20	1590000680	S.TRANSISTOR	DTC114EU T107
Q22	1530003280	S.TRANSISTOR	2SC4211-6-TL
Q23	1590000720	S.TRANSISTOR	DTA144EU T107
Q24	1560000540	S.FET	2SK880-Y (TE85R)
Q25	1560000540	S.FET	2SK880-Y (TE85R)
Q26	1530003000	S.TRANSISTOR	2SC4117-BL (TE85R)
Q27	1530003450	S.TRANSISTOR	2SC4835-R (TX)
Q30	1590002010	S.TRANSISTOR	XP1114 (TX)
Q31	1590001960	S.TRANSISTOR	XP4311 (TX)
Q32	1590000430	S.TRANSISTOR	DTC144EU T107
Q33	1530003280	S.TRANSISTOR	2SC4211-6-TL
Q34	1590001650	S.TRANSISTOR	XP4601 (TX)
Q35	1560000560	S.FET	2SK882-GR (TE85L)
Q36	1590000430	S.TRANSISTOR	DTC144EU T107
Q37	1530003280	S.TRANSISTOR	2SC4211-6-TL
Q38	1590001960	S.TRANSISTOR	XP4311 (TX)
Q39	1580000540	S.FET	3SK131-T2-LA
Q40	1530003280	S.TRANSISTOR	2SC4211-6-TL
Q41	1560000560	S.FET	2SK882-GR (TE85L)
Q42	1530003450	S.TRANSISTOR	2SC4835-R (TX)
Q43	1530003280	S.TRANSISTOR	2SC4211-6-TL
Q44	1590000430	S.TRANSISTOR	DTC144EU T107
Q45	1590001650	S.TRANSISTOR	XP4601 (TX)
Q48	1560000560	S.FET	2SK882-GR (TE85L)
Q49	1530003280	S.TRANSISTOR	2SC4211-6-TL
Q51	1530003280	S.TRANSISTOR	2SC4211-6-TL
Q52	1510000880	S.TRANSISTOR	2SA1622-6-TL

S.=Surface mount

[RF UNIT]

REF NO.	ORDER NO.	DESCRIPTION	
Q53	1510000880	S.TRANSISTOR	2SA1622-6-TL
Q54	1590001770	S.TRANSISTOR	XP1213 (TX)
Q56	1530003280	S.TRANSISTOR	2SC4211-6-TL
Q65	1590002010	S.TRANSISTOR	XP1114 (TX)
Q67	1590002010	S.TRANSISTOR	XP1114 (TX)
Q68	1590002010	S.TRANSISTOR	XP1114 (TX)
Q69	1590001960	S.TRANSISTOR	XP4311 (TX)
Q72	1530003450	S.TRANSISTOR	2SC4835-R (TX)
Q74	1560000540	S.FET	2SK880-Y (TE85R)
Q75	1530003000	S.TRANSISTOR	2SC4117-BL (TE85R)
Q76	1530003550	S.TRANSISTOR	2SC5193-T1
Q77	1530003450	S.TRANSISTOR	2SC4835-R (TX)
Q79	1530003450	S.TRANSISTOR	2SC4835-R (TX)
Q81	1590001960	S.TRANSISTOR	XP4311 (TX)
Q82	1590001330	S.TRANSISTOR	DTA114EU T107
Q83	1530003450	S.TRANSISTOR	2SC4835-R (TX)
Q84	1530003450	S.TRANSISTOR	2SC4835-R (TX)
Q85	1530003280	S.TRANSISTOR	2SC4211-6-TL
Q86	1560000560	S.FET	2SK882-GR (TE85L)
Q87	1530003280	S.TRANSISTOR	2SC4211-6-TL
Q88	1590000430	S.TRANSISTOR	DTC144EU T107
Q89	1530003280	S.TRANSISTOR	2SC4211-6-TL
D1	1750000580	S.DIODE	1SV307 (TPH3)
D2	1750000580	S.DIODE	1SV307 (TPH3)
D3	1790000450	S.DIODE	MA862 (TX)
D5	1790000620	S.DIODE	MA77 (TW)
D6	1790000620	S.DIODE	MA77 (TW)
D7	1790000450	S.DIODE	MA862 (TX)
D8	1790000620	S.DIODE	MA77 (TW)
D10	1750000580	S.DIODE	1SV307 (TPH3)
D11	1720000660	S.VARICAP	1SV288 (TPH2)
D12	1720000660	S.VARICAP	1SV288 (TPH2)
D13	1720000660	S.VARICAP	1SV288 (TPH2)
D14	1720000660	S.VARICAP	1SV288 (TPH2)
D15	1750000580	S.DIODE	1SV307 (TPH3)
D16	1750000580	S.DIODE	1SV307 (TPH3)
D18	1720000270	S.VARICAP	1SV217 (TPH2)
D19	1720000270	S.VARICAP	1SV217 (TPH2)
D20	1750000580	S.DIODE	1SV307 (TPH3)
D21	1750000580	S.DIODE	1SV307 (TPH3)
D23	1720000500	S.VARICAP	1SV230 (TPH3)
D24	1720000500	S.VARICAP	1SV230 (TPH3)
D25	1750000580	S.DIODE	1SV307 (TPH3)
D26	1750000580	S.DIODE	1SV307 (TPH3)
D29	1720000500	S.VARICAP	1SV230 (TPH3)
D30	1720000500	S.VARICAP	1SV230 (TPH3)
D31	1720000500	S.VARICAP	1SV230 (TPH3)
D32	1720000500	S.VARICAP	1SV230 (TPH3)
D33	1750000580	S.DIODE	1SV307 (TPH3)
D34	1750000520	S.DIODE	DAN222TL
D35	1750000520	S.DIODE	DAN222TL
D36	1750000210	S.DIODE	1SV237 (TE85R)
D37	1790000450	S.DIODE	MA862 (TX)
D38	1790000450	S.DIODE	MA862 (TX)
D39	1750000580	S.DIODE	1SV307 (TPH3)
D40	1720000260	S.VARICAP	1SV214 (TPH2)
D41	1750000580	S.DIODE	1SV307 (TPH3)
D42	1750000580	S.DIODE	1SV307 (TPH3)
D43	1720000260	S.VARICAP	1SV214 (TPH2)
D44	1750000580	S.DIODE	1SV307 (TPH3)
D45	1750000520	S.DIODE	DAN222TL
D46	1790000450	S.DIODE	MA862 (TX)
D47	1790000450	S.DIODE	MA862 (TX)
D49	1790000450	S.DIODE	MA862 (TX)
D50	1790000450	S.DIODE	MA862 (TX)
D52	1790000450	S.DIODE	MA862 (TX)
D53	1790001210	S.DIODE	1SS375-TL
D54	1790000450	S.DIODE	MA862 (TX)
D55	1790000450	S.DIODE	MA862 (TX)
D56	1720000500	S.VARICAP	1SV230 (TPH3)
D57	1790000450	S.DIODE	MA862 (TX)
D58	1790000450	S.DIODE	MA862 (TX)
D59	1790000450	S.DIODE	MA862 (TX)
D60	1790000450	S.DIODE	MA862 (TX)
D61	1750000520	S.DIODE	DAN222TL
D63	1790001210	S.DIODE	1SS375-TL
D64	1750000550	S.DIODE	1SS355 TE-17
D65	1750000550	S.DIODE	1SS355 TE-17
D66	1750000550	S.DIODE	1SS355 TE-17
D72	1720000270	S.VARICAP	1SV217 (TPH2)

[RF UNIT]

REF NO.	ORDER NO.	DESCRIPTION	
D73	1720000270	S.VARICAP	1SV217 (TPH2)
D74	1720000270	S.VARICAP	1SV217 (TPH2)
D75	1750000580	S.DIODE	1SV307 (TPH3)
D76	1720000270	S.VARICAP	1SV217 (TPH2)
D77	1720000270	S.VARICAP	1SV217 (TPH2)
D78	1720000500	S.VARICAP	1SV230 (TPH3)
D79	1720000500	S.VARICAP	1SV230 (TPH3)
D80	1720000660	S.VARICAP	1SV288 (TPH2)
D81	1720000660	S.VARICAP	1SV288 (TPH2)
D82	1720000660	S.VARICAP	1SV288 (TPH2)
D83	1720000660	S.VARICAP	1SV288 (TPH2)
D84	1750000580	S.DIODE	1SV307 (TPH3)
D85	1750000520	S.DIODE	DAN222TL
D86	1750000520	S.DIODE	DAN222TL
D87	1750000580	S.DIODE	1SV307 (TPH3)
FI1	2040001270	S.SAW	EFCH266MWNT1
FI2	2020001440	CERAMIC	SFE10.7MV
FI3	2020001450	CERAMIC	SFT10.7MS2-A
FI4	2020001460	CERAMIC	CFWS450HT
FI5	2020001470	CERAMIC	CFWS450K3
FI6	2020001460	CERAMIC	CFWS450HT
FI7	2020001210	CERAMIC	CFWS450E
FI8	2020001140	S.CERAMIC	SFECA10.7MA-5-A
X1	6050010120	S.XTAL	CR-588 (10.250 MHz)
X2	6070000210	S.DISCRIMINATOR	CDBCA450CX24
L1	6200001920	S.COIL	ELJNC R15K-F
L2	6200002520	S.COIL	ELJNC R18K-F
L3	6200004900	S.COIL	ELJFC 5R6K-F
L4	6200004900	S.COIL	ELJFC 5R6K-F
L5	6200005500	S.COIL	NL 322522T-471J
L6	6200005540	S.COIL	ELJNC R47K-F
L7	6200005200	S.COIL	ELJNC R68K-F
L8	6200007380	S.COIL	ELJFC 8R2K-F
L9	6200007830	S.COIL	ELJFC 4R7K-F
L10	6200003350	S.COIL	ELJNC R27K-F
L11	6200002920	S.COIL	ELJNC R33K-F
L12	6200005540	S.COIL	ELJNC R47K-F
L13	6200005540	S.COIL	ELJNC R47K-F
L14	6200003300	S.COIL	ELJNC R22K-F
L15	6200003350	S.COIL	ELJNC R27K-F
L16	6200005550	S.COIL	ELJFC 100K-F
L17	6200007820	S.COIL	ELJND R33J 0.33U
L18	6200001630	S.COIL	ELJNC R10K-F
L19	6200007340	S.COIL	ELJND R22J 0.22U
L20	6200007290	S.COIL	ELJND 56NJF
L21	6200007280	S.COIL	ELJND 47NJF
L22	6200002240	S.COIL	ELJFC 2R2K-F
L23	6200007290	S.COIL	ELJND 56NJF
L24	6200007280	S.COIL	ELJND 47NJF
L25	6200007300	S.COIL	ELJND 68NJF
L26	6200005550	S.COIL	ELJFC 100K-F
L27	6200007280	S.COIL	ELJND 47NJF
L28	6200007280	S.COIL	ELJND 47NJF
L29	6200007280	S.COIL	ELJND 47NJF
L31	6200007290	S.COIL	ELJND 56NJF
L32	6200007070	S.COIL	ELJND 15NKF
L33	6200007070	S.COIL	ELJND 15NKF
L34	6200004230	S.COIL	ELJNC R56K-F
L35	6200005690	S.COIL	ELJRE 18NG-F
L36	6200005690	S.COIL	ELJRE 18NG-F
L37	6200007290	S.COIL	ELJND 56NJF
L38	6200001620	S.COIL	ELJFC 1R0K-F
L39	6200005540	S.COIL	ELJNC R47K-F
L40	6200005690	S.COIL	ELJRE 18NG-F
L41	6200005700	S.COIL	ELJRE 22NG-F
L42	6200005700	S.COIL	ELJRE 22NG-F
L44	6200001630	S.COIL	ELJNC R10K-F
L45	6200005650	S.COIL	ELJRE 8N2Z-F
L46	6200005650	S.COIL	ELJRE 8N2Z-F
L47	6200005700	S.COIL	ELJRE 22NG-F
L48	6200005540	S.COIL	ELJNC R47K-F
L49	6200003300	S.COIL	ELJNC R22K-F
L51	6200005660	S.COIL	ELJRE 10NG-F
L52	6200005580	S.COIL	ELJRE 2N2Z-F
L53	6200005580	S.COIL	ELJRE 2N2Z-F
L54	6200007290	S.COIL	ELJND 56NJF

S.=Surface mount

[RF UNIT]

REF NO.	ORDER NO.	DESCRIPTION	
L55	6200005600	S.COIL	ELJRE 3N3Z-F
L56	6200006770	S.COIL	ELJRE 1N5Z-F
L58	6200001630	S.COIL	ELJNC R10K-F
L59	6140000640	COIL	LR-86
L60	6200002240	S.COIL	ELJFC 2R2K-F
L61	6140001500	COIL	LR-171
L63	6200005740	S.COIL	ELJRE 47NG-F
L64	6200005720	S.COIL	ELJRE 33NG-F
L65	6200001620	S.COIL	ELJFC 1R0K-F
L66	6200005620	S.COIL	ELJRE 4N7Z-F
L67	6200005650	S.COIL	ELJRE 8N2Z-F
L68	6200001620	S.COIL	ELJFC 1R0K-F
L69	6200001620	S.COIL	ELJFC 1R0K-F
L70	6200005720	S.COIL	ELJRE 33NG-F
L71	6200005680	S.COIL	ELJRE 15NG-F
L72	6200005680	S.COIL	ELJRE 15NG-F
L73	6200003300	S.COIL	ELJNC R22K-F
L74	6200006040	S.COIL	LQP11A 5N6C14
L75	6200006070	S.COIL	LQP11A 10NG14
L76	6200006070	S.COIL	LQP11A 10NG14
L77	6200005740	S.COIL	ELJRE 47NG-F
L78	6200003300	S.COIL	ELJNC R22K-F
L79	6200001630	S.COIL	ELJNC R10K-F
L80	6200006020	S.COIL	LQP11A 3N9C14
L81	6200006040	S.COIL	LQP11A 5N6C14
L82	6200006040	S.COIL	LQP11A 5N6C14
L83	6200005720	S.COIL	ELJRE 33NG-F
L84	6200001630	S.COIL	ELJNC R10K-F
L85	6200001620	S.COIL	ELJFC 1R0K-F
L86	6200007420	S.COIL	ELJFC 101K-F 100U
L87	6200007420	S.COIL	ELJFC 101K-F 100U
L88	6200005700	S.COIL	ELJRE 22NG-F
L94	6200005550	S.COIL	ELJFC 100K-F
L95	6200006430	S.COIL	ELJFC 180K-F
L96	6200007400	S.COIL	ELJFC 270K-F 27U
L97	6200007390	S.COIL	ELJFC 120K-F 12U
L98	6200005490	S.COIL	NL 322522T-331J
L99	6200005490	S.COIL	NL 322522T-331J
L100	6200005500	S.COIL	NL 322522T-471J
L101	6200005500	S.COIL	NL 322522T-471J
L102	6200007410	S.COIL	ELJFC 470K-F 47U
L103	6200002240	S.COIL	ELJFC 2R2K-F
L104	6200002890	S.COIL	ELJFC 220K-F
L105	6200007420	S.COIL	ELJFC 101K-F 100U
L106	6150004880	S.COIL	LS-513
L107	6150004880	S.COIL	LS-513
L108	6150004880	S.COIL	LS-513
L110	6200003230	S.COIL	NL 322522T-181J
L112	6150004840	S.COIL	LS-510
L113	6200003950	S.COIL	HF50ACC 322513-T
L114	6200003950	S.COIL	HF50ACC 322513-T
L115	6200003950	S.COIL	HF50ACC 322513-T
L116	6200007860	S.COIL	ELJFC 330K-F 33U
L117	6200007410	S.COIL	ELJFC 470K-F 47U
L118	6200007410	S.COIL	ELJFC 470K-F 47U
L119	6200005550	S.COIL	ELJFC 100K-F
L121	6200003950	S.COIL	HF50ACC 322513-T
L122	6200003950	S.COIL	HF50ACC 322513-T
L124	6200002240	S.COIL	ELJFC 2R2K-F
L125	6200006160	S.COIL	LQP21A 68NG14
L126	6200006140	S.COIL	LQP21A 39NG14
L127	6200002240	S.COIL	ELJFC 2R2K-F
L128	6200002240	S.COIL	ELJFC 2R2K-F
L129	6200001620	S.COIL	ELJFC 1R0K-F
L130	6200005720	S.COIL	ELJRE 33NG-F
L131	6200005720	S.COIL	ELJRE 33NG-F
L132	6200001920	S.COIL	ELJNC R15K-F
L133	6200003300	S.COIL	ELJNC R22K-F
L134	6200002920	S.COIL	ELJNC R33K-F
L135	6200001620	S.COIL	ELJFC 1R0K-F
L136	6200001620	S.COIL	ELJFC 1R0K-F
L138	6200001620	S.COIL	ELJFC 1R0K-F
L139	6200006380	S.COIL	ELJFC 150K 15U
L141	6200005690	S.COIL	ELJRE 18NG-F
L142	6200005690	S.COIL	ELJRE 18NG-F
L143	6200001620	S.COIL	ELJFC 1R0K-F
L144	6200001620	S.COIL	ELJFC 1R0K-F
L145	6200005500	S.COIL	NL 322522T-471J
L146	6200005500	S.COIL	NL 322522T-471J
L147	6200007420	S.COIL	ELJFC 101K-F 100U
L148	6200005550	S.COIL	ELJFC 100K-F
L149	6200005550	S.COIL	ELJFC 100K-F

[RF UNIT]

REF NO.	ORDER NO.	DESCRIPTION	
L150	6200005740	S.COIL	ELJRE 47NG-F
L151	6200005200	S.COIL	ELJNC R68K-F
L152	6200005680	S.COIL	ELJRE 15NG-F
L153	6200005740	S.COIL	ELJRE 47NG-F
L154	6200005680	S.COIL	ELJRE 15NG-F
L155	6200005680	S.COIL	ELJRE 15NG-F
L156	6200005690	S.COIL	ELJRE 18NG-F
L157	6200005690	S.COIL	ELJRE 18NG-F
L158	6200005720	S.COIL	ELJRE 33NG-F
L160	6200005700	S.COIL	ELJRE 22NG-F
L161	6200001620	S.COIL	ELJFC 1R0K-F
L163	6200007070	S.COIL	ELJND 15NKF
L165	6200005540	S.COIL	ELJNC R47K-F
L166	6200003300	S.COIL	ELJNC R22K-F
L167	6200006980	S.COIL	ELJRE R10G-F
L168	6200006980	S.COIL	ELJRE R10G-F
L169	6200005500	S.COIL	NL 322522T-471J
L170	6200005500	S.COIL	NL 322522T-471J
L171	6200005500	S.COIL	NL 322522T-471J
L172	6200002520	S.COIL	ELJNC R18K-F
L173	6200005620	S.COIL	ELJRE 4N7Z-F
L174	6200005600	S.COIL	ELJRE 3N3Z-F
L175	6200007860	S.COIL	ELJFC 330K-F 33U
L176	6200005630	S.COIL	ELJRE 5N6Z-F
R1	7030000330	S.RESISTOR	MCR10EZHJ 390 Ω (391)
R2	7030003440	S.RESISTOR	ERJ3GEYJ 102 V (1 kΩ)
R3	7030000230	S.RESISTOR	MCR10EZHJ 56 Ω (560)
R5	7030003560	S.RESISTOR	ERJ3GEYJ 103 V (10 kΩ)
R6	7030003440	S.RESISTOR	ERJ3GEYJ 102 V (1 kΩ)
R8	7030003440	S.RESISTOR	ERJ3GEYJ 102 V (1 kΩ)
R9	7030000020	S.RESISTOR	MCR10EZHJ 1 Ω (010)
R14	7030003480	S.RESISTOR	ERJ3GEYJ 222 V (2.2 kΩ)
R15	7030003480	S.RESISTOR	ERJ3GEYJ 222 V (2.2 kΩ)
R17	7030003480	S.RESISTOR	ERJ3GEYJ 222 V (2.2 kΩ)
R19	7030003480	S.RESISTOR	ERJ3GEYJ 222 V (2.2 kΩ)
R20	7030003640	S.RESISTOR	ERJ3GEYJ 473 V (47 kΩ)
R22	7030003640	S.RESISTOR	ERJ3GEYJ 473 V (47 kΩ)
R23	7030003640	S.RESISTOR	ERJ3GEYJ 473 V (47 kΩ)
R24	7030003760	S.RESISTOR	ERJ3GEYJ 474 V (470 kΩ)
R26	7030003290	S.RESISTOR	ERJ3GEYJ 560 V (56 Ω)
R28	7030003280	S.RESISTOR	ERJ3GEYJ 470 V (47 Ω)
R29	7030003640	S.RESISTOR	ERJ3GEYJ 473 V (47 kΩ)
R30	7030003440	S.RESISTOR	ERJ3GEYJ 102 V (1 kΩ)
R33	7030003640	S.RESISTOR	ERJ3GEYJ 473 V (47 kΩ)
R34	7030003760	S.RESISTOR	ERJ3GEYJ 474 V (470 kΩ)
R35	7030003480	S.RESISTOR	ERJ3GEYJ 222 V (2.2 kΩ)
R36	7030003290	S.RESISTOR	ERJ3GEYJ 560 V (56 Ω)
R38	7030003280	S.RESISTOR	ERJ3GEYJ 470 V (47 Ω)
R39	7030003640	S.RESISTOR	ERJ3GEYJ 473 V (47 kΩ)
R43	7030003640	S.RESISTOR	ERJ3GEYJ 473 V (47 kΩ)
R44	7030003760	S.RESISTOR	ERJ3GEYJ 474 V (470 kΩ)
R45	7030003290	S.RESISTOR	ERJ3GEYJ 560 V (56 Ω)
R47	7030003280	S.RESISTOR	ERJ3GEYJ 470 V (47 Ω)
R48	7030004050	S.RESISTOR	ERJ3GEYJ 1R0 V (1 Ω)
R49	7030003640	S.RESISTOR	ERJ3GEYJ 473 V (47 kΩ)
R50	7030003480	S.RESISTOR	ERJ3GEYJ 222 V (2.2 kΩ)
R53	7030003640	S.RESISTOR	ERJ3GEYJ 473 V (47 kΩ)
R54	7030003760	S.RESISTOR	ERJ3GEYJ 474 V (470 kΩ)
R55	7030003290	S.RESISTOR	ERJ3GEYJ 560 V (56 Ω)
R57	7030003280	S.RESISTOR	ERJ3GEYJ 470 V (47 Ω)
R59	7030003640	S.RESISTOR	ERJ3GEYJ 473 V (47 kΩ)
R72	7030003310	S.RESISTOR	ERJ3GEYJ 820 V (82 Ω)
R73	7030004050	S.RESISTOR	ERJ3GEYJ 1R0 V (1 Ω)
R74	7030007680	S.RESISTOR	ERJ8ENF 47R0V (47 Ω)
R75	7030003480	S.RESISTOR	ERJ3GEYJ 222 V (2.2 kΩ)
R76	7030003320	S.RESISTOR	ERJ3GEYJ 101 V (100 Ω)
R77	7030003320	S.RESISTOR	ERJ3GEYJ 101 V (100 Ω)
R79	7030003680	S.RESISTOR	ERJ3GEYJ 104 V (100 kΩ)
R80	7030003610	S.RESISTOR	ERJ3GEYJ 273 V (27 kΩ)
R81	7030003400	S.RESISTOR	ERJ3GEYJ 471 V (470 Ω)
R82	7030003420	S.RESISTOR	ERJ3GEYJ 681 V (680 Ω)
R83	7030003520	S.RESISTOR	ERJ3GEYJ 472 V (4.7 kΩ)
R84	7030003200	S.RESISTOR	ERJ3GEYJ 100 V (10 Ω)
R87	7030003320	S.RESISTOR	ERJ3GEYJ 101 V (100 Ω)
R88	7030003440	S.RESISTOR	ERJ3GEYJ 102 V (1 kΩ)
R89	7030003460	S.RESISTOR	ERJ3GEYJ 152 V (1.5 kΩ)
R90	7030003440	S.RESISTOR	ERJ3GEYJ 102 V (1 kΩ)
R92	7030003440	S.RESISTOR	ERJ3GEYJ 102 V (1 kΩ)
R93	7030003270	S.RESISTOR	ERJ3GEYJ 390 V (39 Ω)
R94	7030003340	S.RESISTOR	ERJ3GEYJ 151 V (150 Ω)

S.=Surface mount

[RF UNIT]

REF NO.	ORDER NO.	DESCRIPTION	
R95	7030003340	S.RESISTOR	ERJ3GEYJ 151 V (150 Ω)
R96	7030003440	S.RESISTOR	ERJ3GEYJ 102 V (1 kΩ)
R97	7030003440	S.RESISTOR	ERJ3GEYJ 102 V (1 kΩ)
R98	7030003460	S.RESISTOR	ERJ3GEYJ 152 V (1.5 kΩ)
R99	7030003460	S.RESISTOR	ERJ3GEYJ 152 V (1.5 kΩ)
R100	7030003440	S.RESISTOR	ERJ3GEYJ 102 V (1 kΩ)
R101	7030003490	S.RESISTOR	ERJ3GEYJ 272 V (2.7 kΩ)
R102	7030003490	S.RESISTOR	ERJ3GEYJ 272 V (2.7 kΩ)
R103	7030003490	S.RESISTOR	ERJ3GEYJ 272 V (2.7 kΩ)
R104	7030003320	S.RESISTOR	ERJ3GEYJ 101 V (100 Ω)
R106	7030003320	S.RESISTOR	ERJ3GEYJ 101 V (100 Ω)
R108	7030003480	S.RESISTOR	ERJ3GEYJ 222 V (2.2 kΩ)
R109	7030003320	S.RESISTOR	ERJ3GEYJ 101 V (100 Ω)
R110	7030003320	S.RESISTOR	ERJ3GEYJ 101 V (100 Ω)
R111	7030003490	S.RESISTOR	ERJ3GEYJ 272 V (2.7 kΩ)
R112	7030003490	S.RESISTOR	ERJ3GEYJ 272 V (2.7 kΩ)
R113	7030003490	S.RESISTOR	ERJ3GEYJ 272 V (2.7 kΩ)
R114	7030003320	S.RESISTOR	ERJ3GEYJ 101 V (100 Ω)
R116	7030003320	S.RESISTOR	ERJ3GEYJ 101 V (100 Ω)
R122	7030003360	S.RESISTOR	ERJ3GEYJ 221 V (220 Ω)
R123	7030003390	S.RESISTOR	ERJ3GEYJ 391 V (390 Ω)
R124	7030003720	S.RESISTOR	ERJ3GEYJ 224 V (220 kΩ)
R125	7030003410	S.RESISTOR	ERJ3GEYJ 561 V (560 Ω)
R126	7030003640	S.RESISTOR	ERJ3GEYJ 473 V (47 kΩ)
R127	7030003560	S.RESISTOR	ERJ3GEYJ 103 V (10 kΩ)
R128	7030003640	S.RESISTOR	ERJ3GEYJ 473 V (47 kΩ)
R129	7030003280	S.RESISTOR	ERJ3GEYJ 470 V (47 Ω)
R130	7030003560	S.RESISTOR	ERJ3GEYJ 103 V (10 kΩ)
R131	7030003650	S.RESISTOR	ERJ3GEYJ 563 V (56 kΩ)
R132	7030003360	S.RESISTOR	ERJ3GEYJ 221 V (220 Ω)
R133	7030003400	S.RESISTOR	ERJ3GEYJ 471 V (470 Ω)
R134	7030003600	S.RESISTOR	ERJ3GEYJ 223 V (22 kΩ)
R135	7030003440	S.RESISTOR	ERJ3GEYJ 102 V (1 kΩ)
R136	7030003440	S.RESISTOR	ERJ3GEYJ 102 V (1 kΩ)
R137	7030003320	S.RESISTOR	ERJ3GEYJ 101 V (100 Ω)
R139	7030003720	S.RESISTOR	ERJ3GEYJ 224 V (220 kΩ)
R140	7030003500	S.RESISTOR	ERJ3GEYJ 332 V (3.3 kΩ)
R141	7030003440	S.RESISTOR	ERJ3GEYJ 102 V (1 kΩ)
R145	7030003440	S.RESISTOR	ERJ3GEYJ 102 V (1 kΩ)
R146	7030003380	S.RESISTOR	ERJ3GEYJ 331 V (330 Ω)
R149	7030003560	S.RESISTOR	ERJ3GEYJ 103 V (10 kΩ)
R150	7030003560	S.RESISTOR	ERJ3GEYJ 103 V (10 kΩ)
R151	7030003480	S.RESISTOR	ERJ3GEYJ 222 V (2.2 kΩ)
R152	7030003320	S.RESISTOR	ERJ3GEYJ 101 V (100 Ω)
R153	7030003480	S.RESISTOR	ERJ3GEYJ 222 V (2.2 kΩ)
R154	7030003480	S.RESISTOR	ERJ3GEYJ 222 V (2.2 kΩ)
R155	7030003480	S.RESISTOR	ERJ3GEYJ 222 V (2.2 kΩ)
R156	7030003320	S.RESISTOR	ERJ3GEYJ 101 V (100 Ω)
R157	7030003480	S.RESISTOR	ERJ3GEYJ 222 V (2.2 kΩ)
R158	7030003480	S.RESISTOR	ERJ3GEYJ 222 V (2.2 kΩ)
R159	7030003560	S.RESISTOR	ERJ3GEYJ 103 V (10 kΩ)
R160	7030003560	S.RESISTOR	ERJ3GEYJ 103 V (10 kΩ)
R161	7030003440	S.RESISTOR	ERJ3GEYJ 102 V (1 kΩ)
R164	7030003480	S.RESISTOR	ERJ3GEYJ 222 V (2.2 kΩ)
R166	7030003440	S.RESISTOR	ERJ3GEYJ 102 V (1 kΩ)
R168	7030003480	S.RESISTOR	ERJ3GEYJ 222 V (2.2 kΩ)
R169	7030003720	S.RESISTOR	ERJ3GEYJ 224 V (220 kΩ)
R170	7030003530	S.RESISTOR	ERJ3GEYJ 562 V (5.6 kΩ)
R171	7030003560	S.RESISTOR	ERJ3GEYJ 103 V (10 kΩ)
R172	7030004050	S.RESISTOR	ERJ3GEYJ 1R0 V (1 Ω)
R173	7030003640	S.RESISTOR	ERJ3GEYJ 473 V (47 kΩ)
R174	7030003540	S.RESISTOR	ERJ3GEYJ 682 V (6.8 kΩ)
R176	7030004050	S.RESISTOR	ERJ3GEYJ 1R0 V (1 Ω)
R177	7030003540	S.RESISTOR	ERJ3GEYJ 682 V (6.8 kΩ)
R179	7030003520	S.RESISTOR	ERJ3GEYJ 472 V (4.7 kΩ)
R180	7030003560	S.RESISTOR	ERJ3GEYJ 103 V (10 kΩ)
R181	7030003640	S.RESISTOR	ERJ3GEYJ 473 V (47 kΩ)
R182	7030003510	S.RESISTOR	ERJ3GEYJ 392 V (3.9 kΩ)
R183	7030003640	S.RESISTOR	ERJ3GEYJ 473 V (47 kΩ)
R184	7030003620	S.RESISTOR	ERJ3GEYJ 333 V (33 kΩ)
R185	7030003440	S.RESISTOR	ERJ3GEYJ 102 V (1 kΩ)
R186	7030003320	S.RESISTOR	ERJ3GEYJ 101 V (100 Ω)
R188	7030003680	S.RESISTOR	ERJ3GEYJ 104 V (100 kΩ)
R189	7030003620	S.RESISTOR	ERJ3GEYJ 333 V (33 kΩ)
R190	7030003640	S.RESISTOR	ERJ3GEYJ 473 V (47 kΩ)
R191	7030003530	S.RESISTOR	ERJ3GEYJ 562 V (5.6 kΩ)
R192	7030003400	S.RESISTOR	ERJ3GEYJ 471 V (470 Ω)
R193	7030003400	S.RESISTOR	ERJ3GEYJ 471 V (470 Ω)
R194	7030003240	S.RESISTOR	ERJ3GEYJ 220 V (22 Ω)
R195	7030003560	S.RESISTOR	ERJ3GEYJ 103 V (10 kΩ)
R197	7030003680	S.RESISTOR	ERJ3GEYJ 104 V (100 kΩ)
R198	7030003400	S.RESISTOR	ERJ3GEYJ 471 V (470 Ω)

[RF UNIT]

REF NO.	ORDER NO.	DESCRIPTION	
R199	7030003400	S.RESISTOR	ERJ3GEYJ 471 V (470 Ω)
R200	7030003560	S.RESISTOR	ERJ3GEYJ 103 V (10 kΩ)
R202	7030003600	S.RESISTOR	ERJ3GEYJ 223 V (22 kΩ)
R203	7030003560	S.RESISTOR	ERJ3GEYJ 103 V (10 kΩ)
R204	7030003400	S.RESISTOR	ERJ3GEYJ 471 V (470 Ω)
R206	7030003480	S.RESISTOR	ERJ3GEYJ 222 V (2.2 kΩ)
R207	7030003480	S.RESISTOR	ERJ3GEYJ 222 V (2.2 kΩ)
R209	7030003480	S.RESISTOR	ERJ3GEYJ 222 V (2.2 kΩ)
R210	7030003500	S.RESISTOR	ERJ3GEYJ 332 V (3.3 kΩ)
R211	7030003360	S.RESISTOR	ERJ3GEYJ 221 V (220 Ω)
R212	7030003320	S.RESISTOR	ERJ3GEYJ 101 V (100 Ω)
R213	7030003480	S.RESISTOR	ERJ3GEYJ 222 V (2.2 kΩ)
R214	7030003480	S.RESISTOR	ERJ3GEYJ 222 V (2.2 kΩ)
R215	7030003520	S.RESISTOR	ERJ3GEYJ 472 V (4.7 kΩ)
R216	7030003320	S.RESISTOR	ERJ3GEYJ 101 V (100 Ω)
R217	7030003640	S.RESISTOR	ERJ3GEYJ 473 V (47 kΩ)
R218	7030003600	S.RESISTOR	ERJ3GEYJ 223 V (22 kΩ)
R219	7030003520	S.RESISTOR	ERJ3GEYJ 472 V (4.7 kΩ)
R220	7030003320	S.RESISTOR	ERJ3GEYJ 101 V (100 Ω)
R221	7030003640	S.RESISTOR	ERJ3GEYJ 473 V (47 kΩ)
R222	7030003600	S.RESISTOR	ERJ3GEYJ 223 V (22 kΩ)
R223	7030003520	S.RESISTOR	ERJ3GEYJ 472 V (4.7 kΩ)
R224	7030003520	S.RESISTOR	ERJ3GEYJ 472 V (4.7 kΩ)
R225	7030003320	S.RESISTOR	ERJ3GEYJ 101 V (100 Ω)
R226	7030003640	S.RESISTOR	ERJ3GEYJ 473 V (47 kΩ)
R227	7030003600	S.RESISTOR	ERJ3GEYJ 223 V (22 kΩ)
R228	7030003600	S.RESISTOR	ERJ3GEYJ 223 V (22 kΩ)
R229	7030003640	S.RESISTOR	ERJ3GEYJ 473 V (47 kΩ)
R230	7030003520	S.RESISTOR	ERJ3GEYJ 472 V (4.7 kΩ)
R231	7030003460	S.RESISTOR	ERJ3GEYJ 152 V (1.5 kΩ)
R232	7030003410	S.RESISTOR	ERJ3GEYJ 561 V (560 Ω)
R233	7030003700	S.RESISTOR	ERJ3GEYJ 154 V (150 kΩ)
R234	7030003540	S.RESISTOR	ERJ3GEYJ 682 V (6.8 kΩ)
R235	7030003440	S.RESISTOR	ERJ3GEYJ 102 V (1 kΩ)
R236	7030003440	S.RESISTOR	ERJ3GEYJ 102 V (1 kΩ)
R237	7030003560	S.RESISTOR	ERJ3GEYJ 103 V (10 kΩ)
R238	7030003440	S.RESISTOR	ERJ3GEYJ 102 V (1 kΩ)
R239	7030003280	S.RESISTOR	ERJ3GEYJ 470 V (47 Ω)
R240	7030003480	S.RESISTOR	ERJ3GEYJ 222 V (2.2 kΩ)
R241	7030003480	S.RESISTOR	ERJ3GEYJ 222 V (2.2 kΩ)
R242	7030003640	S.RESISTOR	ERJ3GEYJ 473 V (47 kΩ)
R243	7030003640	S.RESISTOR	ERJ3GEYJ 473 V (47 kΩ)
R245	7030003560	S.RESISTOR	ERJ3GEYJ 103 V (10 kΩ)
R246	7030003650	S.RESISTOR	ERJ3GEYJ 563 V (56 kΩ)
R247	7030003510	S.RESISTOR	ERJ3GEYJ 392 V (3.9 kΩ)
R248	7030003760	S.RESISTOR	ERJ3GEYJ 474 V (470 kΩ)
R249	7030003560	S.RESISTOR	ERJ3GEYJ 103 V (10 kΩ)
R250	7030003560	S.RESISTOR	ERJ3GEYJ 103 V (10 kΩ)
R251	7030003320	S.RESISTOR	ERJ3GEYJ 101 V (100 Ω)
R252	7030003600	S.RESISTOR	ERJ3GEYJ 223 V (22 kΩ)
R253	7030003680	S.RESISTOR	ERJ3GEYJ 104 V (100 kΩ)
R256	7030003520	S.RESISTOR	ERJ3GEYJ 472 V (4.7 kΩ)
R257	7030003640	S.RESISTOR	ERJ3GEYJ 473 V (47 kΩ)
R258	7030003640	S.RESISTOR	ERJ3GEYJ 473 V (47 kΩ)
R259	7030003600	S.RESISTOR	ERJ3GEYJ 223 V (22 kΩ)
R260	7030003600	S.RESISTOR	ERJ3GEYJ 223 V (22 kΩ)
R261	7030003600	S.RESISTOR	ERJ3GEYJ 223 V (22 kΩ)
R262	7030003470	S.RESISTOR	ERJ3GEYJ 182 V (1.8 kΩ)
R263	7030003440	S.RESISTOR	ERJ3GEYJ 102 V (1 kΩ)
R264	7030003710	S.RESISTOR	ERJ3GEYJ 184 V (180 kΩ)
R266	7030003360	S.RESISTOR	ERJ3GEYJ 221 V (220 Ω)
R267	7030003650	S.RESISTOR	ERJ3GEYJ 563 V (56 kΩ)
R268	7030003640	S.RESISTOR	ERJ3GEYJ 473 V (47 kΩ)
R270	7030003320	S.RESISTOR	ERJ3GEYJ 101 V (100 Ω)
R271	7030003680	S.RESISTOR	ERJ3GEYJ 104 V (100 kΩ)
R272	7030003700	S.RESISTOR	ERJ3GEYJ 154 V (150 kΩ)
R274	7030003620	S.RESISTOR	ERJ3GEYJ 333 V (33 kΩ)
R275	7030003340	S.RESISTOR	ERJ3GEYJ 151 V (150 Ω)
R277	7030003320	S.RESISTOR	ERJ3GEYJ 101 V (100 Ω)
R278	7030003720	S.RESISTOR	ERJ3GEYJ 224 V (220 kΩ)
R279	7030003440	S.RESISTOR	ERJ3GEYJ 102 V (1 kΩ)
R281	7030003520	S.RESISTOR	ERJ3GEYJ 472 V (4.7 kΩ)
R282	7030003440	S.RESISTOR	ERJ3GEYJ 102 V (1 kΩ)
R284	7030003840	S.RESISTOR	ERJ3GEYJ 225 V (2.2 MΩ)
R285	7030003520	S.RESISTOR	ERJ3GEYJ 472 V (4.7 kΩ)
R286	7030004050	S.RESISTOR	ERJ3GEYJ 1R0 V (1 Ω)
R288	7030003520	S.RESISTOR	ERJ3GEYJ 472 V (4.7 kΩ)
R289	7030003600	S.RESISTOR	ERJ3GEYJ 223 V (22 kΩ)
R290	7030003320	S.RESISTOR	ERJ3GEYJ 101 V (100 Ω)
R291	7030003560	S.RESISTOR	ERJ3GEYJ 103 V (10 kΩ)
R292	7030003680	S.RESISTOR	ERJ3GEYJ 104 V (100 kΩ)
R293	7030003670	S.RESISTOR	ERJ3GEYJ 823 V (82 kΩ)

S.=Surface mount

[RF UNIT]

REF NO.	ORDER NO.	DESCRIPTION	
R294	7030003440	S.RESISTOR	ERJ3GEYJ 102 V (1 kΩ)
R295	7030003540	S.RESISTOR	ERJ3GEYJ 682 V (6.8 kΩ)
R296	7030003680	S.RESISTOR	ERJ3GEYJ 104 V (100 kΩ)
R297	7030003660	S.RESISTOR	ERJ3GEYJ 683 V (68 kΩ)
R298	7030003640	S.RESISTOR	ERJ3GEYJ 473 V (47 kΩ)
R299	7030003320	S.RESISTOR	ERJ3GEYJ 101 V (100 Ω)
R300	7030003440	S.RESISTOR	ERJ3GEYJ 102 V (1 kΩ)
R301	7030003500	S.RESISTOR	ERJ3GEYJ 332 V (3.3 kΩ)
R302	7030003500	S.RESISTOR	ERJ3GEYJ 332 V (3.3 kΩ)
R303	7030003560	S.RESISTOR	ERJ3GEYJ 103 V (10 kΩ)
R304	7030003640	S.RESISTOR	ERJ3GEYJ 473 V (47 kΩ)
R309	7030003680	S.RESISTOR	ERJ3GEYJ 104 V (100 kΩ)
R310	7030003320	S.RESISTOR	ERJ3GEYJ 101 V (100 Ω)
R311	7030003620	S.RESISTOR	ERJ3GEYJ 333 V (33 kΩ)
R312	7030003780	S.RESISTOR	ERJ3GEYJ 684 V (680 kΩ)
R313	7030003570	S.RESISTOR	ERJ3GEYJ 123 V (12 kΩ)
R314	7030003800	S.RESISTOR	ERJ3GEYJ 105 V (1 MΩ)
R315	7030003840	S.RESISTOR	ERJ3GEYJ 225 V (2.2 MΩ)
R316	7030003440	S.RESISTOR	ERJ3GEYJ 102 V (1 kΩ)
R317	7030003470	S.RESISTOR	ERJ3GEYJ 182 V (1.8 kΩ)
R318	7030003560	S.RESISTOR	ERJ3GEYJ 103 V (10 kΩ)
R319	7030003580	S.RESISTOR	ERJ3GEYJ 153 V (15 kΩ)
R320	7030003640	S.RESISTOR	ERJ3GEYJ 473 V (47 kΩ)
R321	7030003570	S.RESISTOR	ERJ3GEYJ 123 V (12 kΩ)
R322	7030003320	S.RESISTOR	ERJ3GEYJ 101 V (100 Ω)
R323	7030003480	S.RESISTOR	ERJ3GEYJ 222 V (2.2 kΩ)
R324	7030003640	S.RESISTOR	ERJ3GEYJ 473 V (47 kΩ)
R325	7030003680	S.RESISTOR	ERJ3GEYJ 104 V (100 kΩ)
R326	7030003700	S.RESISTOR	ERJ3GEYJ 154 V (150 kΩ)
R327	7030003620	S.RESISTOR	ERJ3GEYJ 333 V (33 kΩ)
R351	7030007220	S.RESISTOR	ERA3YED 202V
R352	7030007220	S.RESISTOR	ERA3YED 202V
R353	7030007230	S.RESISTOR	ERA3YED 102V
R354	7030007220	S.RESISTOR	ERA3YED 202V
R355	7030007230	S.RESISTOR	ERA3YED 102V
R356	7030007220	S.RESISTOR	ERA3YED 202V
R357	7030007230	S.RESISTOR	ERA3YED 102V
R358	7030007220	S.RESISTOR	ERA3YED 202V
R359	7030007230	S.RESISTOR	ERA3YED 102V
R360	7030007220	S.RESISTOR	ERA3YED 202V
R361	7030007230	S.RESISTOR	ERA3YED 102V
R362	7030007220	S.RESISTOR	ERA3YED 202V
R363	7030007230	S.RESISTOR	ERA3YED 102V
R364	7030007220	S.RESISTOR	ERA3YED 202V
R365	7030007210	S.RESISTOR	ERA3YEB 102V
R366	7030007200	S.RESISTOR	ERA3YEB 202V
R367	7030007210	S.RESISTOR	ERA3YEB 102V
R368	7030007200	S.RESISTOR	ERA3YEB 202V
R369	7030007210	S.RESISTOR	ERA3YEB 102V
R370	7030007200	S.RESISTOR	ERA3YEB 202V
R371	7030007210	S.RESISTOR	ERA3YEB 102V
R372	7030007200	S.RESISTOR	ERA3YEB 202V
R373	7030007210	S.RESISTOR	ERA3YEB 102V
R374	7030007200	S.RESISTOR	ERA3YEB 202V
R375	7030003440	S.RESISTOR	ERJ3GEYJ 102 V (1 kΩ)
R376	7030003680	S.RESISTOR	ERJ3GEYJ 104 V (100 kΩ)
R377	7030003680	S.RESISTOR	ERJ3GEYJ 104 V (100 kΩ)
R380	7030003280	S.RESISTOR	ERJ3GEYJ 470 V (47 Ω)
R381	7030003400	S.RESISTOR	ERJ3GEYJ 471 V (470 Ω)
R382	7030003700	S.RESISTOR	ERJ3GEYJ 154 V (150 kΩ)
R383	7030003440	S.RESISTOR	ERJ3GEYJ 102 V (1 kΩ)
R391	7030003360	S.RESISTOR	ERJ3GEYJ 221 V (220 Ω)
R392	7030003440	S.RESISTOR	ERJ3GEYJ 102 V (1 kΩ)
R393	7030003440	S.RESISTOR	ERJ3GEYJ 102 V (1 kΩ)
R394	7030003400	S.RESISTOR	ERJ3GEYJ 471 V (470 Ω)
R395	7030003600	S.RESISTOR	ERJ3GEYJ 223 V (22 kΩ)
R396	7030003320	S.RESISTOR	ERJ3GEYJ 101 V (100 Ω)
R397	7030003440	S.RESISTOR	ERJ3GEYJ 102 V (1 kΩ)
R398	7030003490	S.RESISTOR	ERJ3GEYJ 272 V (2.7 kΩ)
R399	7030003520	S.RESISTOR	ERJ3GEYJ 472 V (4.7 kΩ)
R400	7030003490	S.RESISTOR	ERJ3GEYJ 272 V (2.7 kΩ)
R401	7030003440	S.RESISTOR	ERJ3GEYJ 102 V (1 kΩ)
R402	7030003360	S.RESISTOR	ERJ3GEYJ 221 V (220 Ω)
R403	7030003320	S.RESISTOR	ERJ3GEYJ 101 V (100 Ω)
R404	7030003320	S.RESISTOR	ERJ3GEYJ 101 V (100 Ω)
R405	7030003510	S.RESISTOR	ERJ3GEYJ 392 V (3.9 kΩ)
R406	7030003460	S.RESISTOR	ERJ3GEYJ 152 V (1.5 kΩ)
R407	7030003360	S.RESISTOR	ERJ3GEYJ 221 V (220 Ω)
R408	7030003280	S.RESISTOR	ERJ3GEYJ 470 V (47 Ω)
R409	7030003800	S.RESISTOR	ERJ3GEYJ 105 V (1 MΩ)
R411	7030003360	S.RESISTOR	ERJ3GEYJ 221 V (220 Ω)
R412	7030003230	S.RESISTOR	ERJ3GEYJ 180 V (18 Ω)

[RF UNIT]

REF NO.	ORDER NO.	DESCRIPTION	
R413	7030003320	S.RESISTOR	ERJ3GEYJ 101 V (100 Ω)
R415	7030003290	S.RESISTOR	ERJ3GEYJ 560 V (56 Ω)
R416	7030003680	S.RESISTOR	ERJ3GEYJ 104 V (100 kΩ)
R418	7030003320	S.RESISTOR	ERJ3GEYJ 101 V (100 Ω)
R420	7030003690	S.RESISTOR	ERJ3GEYJ 124 V (120 kΩ)
R423	7030007220	S.RESISTOR	ERA3YED 202V
R424	7030007220	S.RESISTOR	ERA3YED 202V
R425	7030007230	S.RESISTOR	ERA3YED 102V
R426	7030007220	S.RESISTOR	ERA3YED 202V
R427	7030007230	S.RESISTOR	ERA3YED 102V
R428	7030007220	S.RESISTOR	ERA3YED 202V
R429	7030007230	S.RESISTOR	ERA3YED 102V
R430	7030007220	S.RESISTOR	ERA3YED 202V
R431	7030007230	S.RESISTOR	ERA3YED 102V
R432	7030007220	S.RESISTOR	ERA3YED 202V
R433	7030007230	S.RESISTOR	ERA3YED 102V
R434	7030007220	S.RESISTOR	ERA3YED 202V
R435	7030007230	S.RESISTOR	ERA3YED 102V
R436	7030007220	S.RESISTOR	ERA3YED 202V
R437	7030007210	S.RESISTOR	ERA3YEB 102V
R438	7030007200	S.RESISTOR	ERA3YEB 202V
R439	7030007210	S.RESISTOR	ERA3YEB 102V
R440	7030007200	S.RESISTOR	ERA3YEB 202V
R441	7030007210	S.RESISTOR	ERA3YEB 102V
R442	7030007200	S.RESISTOR	ERA3YEB 202V
R449	7030003680	S.RESISTOR	ERJ3GEYJ 104 V (100 kΩ)
R450	7030003560	S.RESISTOR	ERJ3GEYJ 103 V (10 kΩ)
R451	7030003360	S.RESISTOR	ERJ3GEYJ 221 V (220 Ω)
R452	7030003640	S.RESISTOR	ERJ3GEYJ 473 V (47 kΩ)
R453	7030003350	S.RESISTOR	ERJ3GEYJ 181 V (180 Ω)
R454	7030003320	S.RESISTOR	ERJ3GEYJ 101 V (100 Ω)
R455	7030003500	S.RESISTOR	ERJ3GEYJ 332 V (3.3 kΩ)
R456	7030003380	S.RESISTOR	ERJ3GEYJ 331 V (330 Ω)
R457	7030003460	S.RESISTOR	ERJ3GEYJ 152 V (1.5 kΩ)
R459	7030003600	S.RESISTOR	ERJ3GEYJ 223 V (22 kΩ)
R460	7030003490	S.RESISTOR	ERJ3GEYJ 272 V (2.7 kΩ)
R462	7030003840	S.RESISTOR	ERJ3GEYJ 225 V (2.2 MΩ)
R463	7030003270	S.RESISTOR	ERJ3GEYJ 390 V (39 Ω)
R464	7030003440	S.RESISTOR	ERJ3GEYJ 102 V (1 kΩ)
R466	7030003680	S.RESISTOR	ERJ3GEYJ 104 V (100 kΩ)
R467	7030005870	S.RESISTOR	RR0816R-104-D (100 kΩ)
R468	7030003610	S.RESISTOR	ERJ3GEYJ 273 V (27 kΩ)
R469	7030003620	S.RESISTOR	ERJ3GEYJ 333 V (33 kΩ)
R470	7030003290	S.RESISTOR	ERJ3GEYJ 560 V (56 Ω)
R471	7030003270	S.RESISTOR	ERJ3GEYJ 390 V (39 Ω)
R473	7030003340	S.RESISTOR	ERJ3GEYJ 151 V (150 Ω)
R474	7030003270	S.RESISTOR	ERJ3GEYJ 390 V (39 Ω)
R475	7030003340	S.RESISTOR	ERJ3GEYJ 151 V (150 Ω)
R476	7030003340	S.RESISTOR	ERJ3GEYJ 151 V (150 Ω)
R477	7030003270	S.RESISTOR	ERJ3GEYJ 390 V (39 Ω)
R478	7030003340	S.RESISTOR	ERJ3GEYJ 151 V (150 Ω)
R479	7030003320	S.RESISTOR	ERJ3GEYJ 101 V (100 Ω)
R480	7030003650	S.RESISTOR	ERJ3GEYJ 563 V (56 kΩ)
R482	7030003320	S.RESISTOR	ERJ3GEYJ 101 V (100 Ω)
R483	7030003340	S.RESISTOR	ERJ3GEYJ 151 V (150 Ω)
R485	7030003300	S.RESISTOR	ERJ3GEYJ 680 V (68 Ω)
R486	7030003320	S.RESISTOR	ERJ3GEYJ 101 V (100 Ω)
R487	7030003280	S.RESISTOR	ERJ3GEYJ 470 V (47 Ω)
R488	7030003640	S.RESISTOR	ERJ3GEYJ 473 V (47 kΩ)
R489	7030003680	S.RESISTOR	ERJ3GEYJ 104 V (100 kΩ)
R490	7030003380	S.RESISTOR	ERJ3GEYJ 331 V (330 Ω)
R491	7030003440	S.RESISTOR	ERJ3GEYJ 102 V (1 kΩ)
R494	7030003520	S.RESISTOR	ERJ3GEYJ 472 V (4.7 kΩ)
R496	7030003700	S.RESISTOR	ERJ3GEYJ 154 V (150 kΩ)
R497	7030003400	S.RESISTOR	ERJ3GEYJ 471 V (470 Ω)
R498	7030003400	S.RESISTOR	ERJ3GEYJ 471 V (470 Ω)
R501	7030003320	S.RESISTOR	ERJ3GEYJ 101 V (100 Ω)
R502	7030003320	S.RESISTOR	ERJ3GEYJ 101 V (100 Ω)
R503	7030003480	S.RESISTOR	ERJ3GEYJ 222 V (2.2 kΩ)
R504	7030003340	S.RESISTOR	ERJ3GEYJ 151 V (150 Ω)
R505	7030003400	S.RESISTOR	ERJ3GEYJ 471 V (470 Ω)
R506	7030003680	S.RESISTOR	ERJ3GEYJ 104 V (100 kΩ)
R507	7030003520	S.RESISTOR	ERJ3GEYJ 472 V (4.7 kΩ)
R509	7030003560	S.RESISTOR	ERJ3GEYJ 103 V (10 kΩ)
R511	7030003560	S.RESISTOR	ERJ3GEYJ 103 V (10 kΩ)
R512	7030003370	S.RESISTOR	ERJ3GEYJ 271 V (270 Ω)
R513	7030003230	S.RESISTOR	ERJ3GEYJ 180 V (18 Ω)
R514	7030003370	S.RESISTOR	ERJ3GEYJ 271 V (270 Ω)
R515	7030003440	S.RESISTOR	ERJ3GEYJ 102 V (1 kΩ)
R516	7510000920	S.THERMISTOR	NTCCF2012 4CH 104KC-T
R517	7030003600	S.RESISTOR	ERJ3GEYJ 223 V (22 kΩ)
R518	7030003560	S.RESISTOR	ERJ3GEYJ 103 V (10 kΩ)

S.=Surface mount

[RF UNIT]

REF NO.	ORDER NO.	DESCRIPTION	
R519	7030003610	S.RESISTOR	ERJ3GEYJ 273 V (27 kΩ)
R520	7030003320	S.RESISTOR	ERJ3GEYJ 101 V (100 Ω)
R521	7310004030	S.TRIMMER	EVM-1YSX50 B12 (101)
R523	7310004110	S.TRIMMER	EVM-1YSX50 B54 (503)
R524	7030004050	S.RESISTOR	ERJ3GEYJ 1R0 V (1 Ω)
R525	7030003280	S.RESISTOR	ERJ3GEYJ 470 V (47 Ω)
R526	7030003370	S.RESISTOR	ERJ3GEYJ 271 V (270 Ω)
R527	7030003370	S.RESISTOR	ERJ3GEYJ 271 V (270 Ω)
R528	7030003290	S.RESISTOR	ERJ3GEYJ 560 V (56 Ω)
R529	7030004050	S.RESISTOR	ERJ3GEYJ 1R0 V (1 Ω)
R530	7030004050	S.RESISTOR	ERJ3GEYJ 1R0 V (1 Ω)
R531	7030003560	S.RESISTOR	ERJ3GEYJ 103 V (10 kΩ)
R532	7030003320	S.RESISTOR	ERJ3GEYJ 101 V (100 Ω)
R533	7030003320	S.RESISTOR	ERJ3GEYJ 101 V (100 Ω)
R534	7030003320	S.RESISTOR	ERJ3GEYJ 101 V (100 Ω)
R535	7030003320	S.RESISTOR	ERJ3GEYJ 101 V (100 Ω)
R536	7030003320	S.RESISTOR	ERJ3GEYJ 101 V (100 Ω)
R537	7030003400	S.RESISTOR	ERJ3GEYJ 471 V (470 Ω)
R538	7030003320	S.RESISTOR	ERJ3GEYJ 101 V (100 Ω)
R539	7030003640	S.RESISTOR	ERJ3GEYJ 473 V (47 kΩ)
R540	7030003640	S.RESISTOR	ERJ3GEYJ 473 V (47 kΩ)
R541	7510000900	S.THERMISTOR	NTCCF2012 3SH 223KC-T
R542	7510000900	S.THERMISTOR	NTCCF2012 3SH 223KC-T
R543	7030003520	S.RESISTOR	ERJ3GEYJ 472 V (4.7 kΩ)
R544	7030004050	S.RESISTOR	ERJ3GEYJ 1R0 V (1 Ω)
R545	7030003320	S.RESISTOR	ERJ3GEYJ 101 V (100 Ω)
R546	7030003360	S.RESISTOR	ERJ3GEYJ 221 V (220 Ω)
C1	4030011600	S.CERAMIC	C1608 JB 1C 104KT-N
C2	4030011600	S.CERAMIC	C1608 JB 1C 104KT-N
C3	4030006860	S.CERAMIC	C1608 JB 1H 102K-T-A
C4	4030006860	S.CERAMIC	C1608 JB 1H 102K-T-A
C6	4030006860	S.CERAMIC	C1608 JB 1H 102K-T-A
C7	4030009990	S.CERAMIC	C1608 CH 1H 200J-T-A
C8	4030006990	S.CERAMIC	C1608 CH 1H 080D-T-A
C9	4030008560	S.CERAMIC	C1608 CH 1H 300J-T-A
C10	4030007130	S.CERAMIC	C1608 CH 1H 101J-T-A
C11	4030007100	S.CERAMIC	C1608 CH 1H 560J-T-A
C13	4030011600	S.CERAMIC	C1608 JB 1C 104KT-N
C14	4030011280	S.CERAMIC	C1608 CH 1H 271J-T-A
C15	4030009980	S.CERAMIC	C1608 JB 1H 152K-T-A
C16	4030006860	S.CERAMIC	C1608 JB 1H 102K-T-A
C17	4030011600	S.CERAMIC	C1608 JB 1C 104KT-N
C18	4030011600	S.CERAMIC	C1608 JB 1C 104KT-N
C19	4030011600	S.CERAMIC	C1608 JB 1C 104KT-N
C20	4030011600	S.CERAMIC	C1608 JB 1C 104KT-N
C21	4030007120	S.CERAMIC	C1608 CH 1H 820J-T-A
C22	4030007060	S.CERAMIC	C1608 CH 1H 270J-T-A
C23	4030007150	S.CERAMIC	C1608 CH 1H 151J-T-A
C24	4030010760	S.CERAMIC	C1608 CH 1H 331J-T-A
C25	4030007160	S.CERAMIC	C1608 CH 1H 181J-T-A
C26	4030008650	S.CERAMIC	C1608 JB 1H 332K-T-A
C27	4030006860	S.CERAMIC	C1608 JB 1H 102K-T-A
C28	4030006870	S.CERAMIC	C1608 JB 1H 222K-T-A
C29	4030008470	S.CERAMIC	C1608 JB 1H 272K-T-A
C30	4030006900	S.CERAMIC	C1608 JB 1E 103K-T-A
C31	4030011600	S.CERAMIC	C1608 JB 1C 104KT-N
C32	4030011600	S.CERAMIC	C1608 JB 1C 104KT-N
C33	4030007080	S.CERAMIC	C1608 CH 1H 390J-T-A
C34	4030007020	S.CERAMIC	C1608 CH 1H 120J-T-A
C35	4030007080	S.CERAMIC	C1608 CH 1H 390J-T-A
C36	4030007150	S.CERAMIC	C1608 CH 1H 151J-T-A
C37	4030007120	S.CERAMIC	C1608 CH 1H 820J-T-A
C38	4030007170	S.CERAMIC	C1608 CH 1H 221J-T-A
C39	4030007160	S.CERAMIC	C1608 CH 1H 181J-T-A
C40	4030006860	S.CERAMIC	C1608 JB 1H 102K-T-A
C41	4030006860	S.CERAMIC	C1608 JB 1H 102K-T-A
C42	4030006900	S.CERAMIC	C1608 JB 1E 103K-T-A
C43	4030011600	S.CERAMIC	C1608 JB 1C 104KT-N
C44	4030006900	S.CERAMIC	C1608 JB 1E 103K-T-A
C45	4030007170	S.CERAMIC	C1608 CH 1H 221J-T-A
C46	4030007110	S.CERAMIC	C1608 CH 1H 680J-T-A
C47	4030007140	S.CERAMIC	C1608 CH 1H 121J-T-A
C48	4030009980	S.CERAMIC	C1608 JB 1H 152K-T-A
C49	4030006850	S.CERAMIC	C1608 JB 1H 471K-T-A
C50	4030006900	S.CERAMIC	C1608 JB 1E 103K-T-A
C51	4030011600	S.CERAMIC	C1608 JB 1C 104KT-N
C52	4030006880	S.CERAMIC	C1608 JB 1H 472K-T-A
C53	4030006860	S.CERAMIC	C1608 JB 1H 102K-T-A
C54	4030007090	S.CERAMIC	C1608 CH 1H 470J-T-A
C55	4030006860	S.CERAMIC	C1608 JB 1H 102K-T-A

[RF UNIT]

REF NO.	ORDER NO.	DESCRIPTION	
C57	4030007090	S.CERAMIC	C1608 CH 1H 470J-T-A
C59	4030006860	S.CERAMIC	C1608 JB 1H 102K-T-A
C60	4030006860	S.CERAMIC	C1608 JB 1H 102K-T-A
C61	4030009920	S.CERAMIC	C1608 CH 1H 050B-T-A
C62	4030006860	S.CERAMIC	C1608 JB 1H 102K-T-A
C63	4030006860	S.CERAMIC	C1608 JB 1H 102K-T-A
C64	4030006860	S.CERAMIC	C1608 JB 1H 102K-T-A
C65	4030006860	S.CERAMIC	C1608 JB 1H 102K-T-A
C66	4030006880	S.CERAMIC	C1608 JB 1H 472K-T-A
C67	4030006880	S.CERAMIC	C1608 JB 1H 472K-T-A
C68	4030006860	S.CERAMIC	C1608 JB 1H 102K-T-A
C69	4030007040	S.CERAMIC	C1608 CH 1H 180J-T-A
C70	4030007030	S.CERAMIC	C1608 CH 1H 150J-T-A
C71	4030009990	S.CERAMIC	C1608 CH 1H 200J-T-A
C72	4030006860	S.CERAMIC	C1608 JB 1H 102K-T-A
C73	4030007100	S.CERAMIC	C1608 CH 1H 560J-T-A
C74	4030007130	S.CERAMIC	C1608 CH 1H 101J-T-A
C75	4030006860	S.CERAMIC	C1608 JB 1H 102K-T-A
C79	4030006860	S.CERAMIC	C1608 JB 1H 102K-T-A
C80	4030006860	S.CERAMIC	C1608 JB 1H 102K-T-A
C81	4030006860	S.CERAMIC	C1608 JB 1H 102K-T-A
C82	4030006850	S.CERAMIC	C1608 JB 1H 471K-T-A
C83	4030006860	S.CERAMIC	C1608 JB 1H 102K-T-A
C84	4030006860	S.CERAMIC	C1608 JB 1H 102K-T-A
C85	4030009530	S.CERAMIC	C1608 CH 1H 030B-T-A
C86	4030006860	S.CERAMIC	C1608 JB 1H 102K-T-A
C87	4030006860	S.CERAMIC	C1608 JB 1H 102K-T-A
C88	4030006860	S.CERAMIC	C1608 JB 1H 102K-T-A
C89	4030006860	S.CERAMIC	C1608 JB 1H 102K-T-A
C90	4030011600	S.CERAMIC	C1608 JB 1C 104KT-N
C91	4030006860	S.CERAMIC	C1608 JB 1H 102K-T-A
C92	4030008750	S.CERAMIC	C1608 CH 1H 360J-T-A
C93	4030006860	S.CERAMIC	C1608 JB 1H 102K-T-A
C94	4030007040	S.CERAMIC	C1608 CH 1H 180J-T-A
C97	4030006860	S.CERAMIC	C1608 JB 1H 102K-T-A
C98	4030006860	S.CERAMIC	C1608 JB 1H 102K-T-A
C99	4030006860	S.CERAMIC	C1608 JB 1H 102K-T-A
C100	4030006850	S.CERAMIC	C1608 JB 1H 471K-T-A
C101	4030006860	S.CERAMIC	C1608 JB 1H 102K-T-A
C102	4030006860	S.CERAMIC	C1608 JB 1H 102K-T-A
C103	4030009530	S.CERAMIC	C1608 CH 1H 030B-T-A
C104	4030006860	S.CERAMIC	C1608 JB 1H 102K-T-A
C106	4030006860	S.CERAMIC	C1608 JB 1H 102K-T-A
C107	4030006860	S.CERAMIC	C1608 JB 1H 102K-T-A
C108	4030011600	S.CERAMIC	C1608 JB 1C 104KT-N
C109	4030006860	S.CERAMIC	C1608 JB 1H 102K-T-A
C110	4030009990	S.CERAMIC	C1608 CH 1H 200J-T-A
C113	4030006860	S.CERAMIC	C1608 JB 1H 102K-T-A
C114	4030006860	S.CERAMIC	C1608 JB 1H 102K-T-A
C115	4030006860	S.CERAMIC	C1608 JB 1H 102K-T-A
C116	4030006850	S.CERAMIC	C1608 JB 1H 471K-T-A
C117	4030006850	S.CERAMIC	C1608 JB 1H 471K-T-A
C118	4030006850	S.CERAMIC	C1608 JB 1H 471K-T-A
C119	4030006860	S.CERAMIC	C1608 JB 1H 102K-T-A
C120	4030006860	S.CERAMIC	C1608 JB 1H 102K-T-A
C121	4030011770	S.CERAMIC	C1608 CH 1H 060B-T-A
C123	4030006860	S.CERAMIC	C1608 JB 1H 102K-T-A
C125	4030006860	S.CERAMIC	C1608 JB 1H 102K-T-A
C126	4030011600	S.CERAMIC	C1608 JB 1C 104KT-N
C127	4030011600	S.CERAMIC	C1608 JB 1C 104KT-N
C128	4030006860	S.CERAMIC	C1608 JB 1H 102K-T-A
C129	4030011600	S.CERAMIC	C1608 JB 1C 104KT-N
C130	4030006860	S.CERAMIC	C1608 JB 1H 102K-T-A
C131	4030007130	S.CERAMIC	C1608 CH 1H 101J-T-A
C132	4030006860	S.CERAMIC	C1608 JB 1H 102K-T-A
C133	4030011600	S.CERAMIC	C1608 JB 1C 104KT-N
C134	4030006860	S.CERAMIC	C1608 JB 1H 102K-T-A
C135	4030006850	S.CERAMIC	C1608 JB 1H 471K-T-A
C136	4030006860	S.CERAMIC	C1608 JB 1H 102K-T-A
C137	4030011600	S.CERAMIC	C1608 JB 1C 104KT-N
C138	4030008560	S.CERAMIC	C1608 CH 1H 300J-T-A
C139	4030011810	S.CERAMIC	C1608 JB 1A 224K-T-N
C140	4030011770	S.CERAMIC	C1608 CH 1H 060B-T-A
C141	4030009920	S.CERAMIC	C1608 CH 1H 050B-T-A
C142	4030006860	S.CERAMIC	C1608 JB 1H 102K-T-A
C143	4030006860	S.CERAMIC	C1608 JB 1H 102K-T-A
C145	4030006860	S.CERAMIC	C1608 JB 1H 102K-T-A
C146	4030011600	S.CERAMIC	C1608 JB 1C 104KT-N
C148	4030006860	S.CERAMIC	C1608 JB 1H 102K-T-A
C149	4030006860	S.CERAMIC	C1608 JB 1H 102K-T-A
C150	4030007050	S.CERAMIC	C1608 CH 1H 220J-T-A
C151	4030011600	S.CERAMIC	C1608 JB 1C 104KT-N

S.=Surface mount

[RF UNIT]

REF NO.	ORDER NO.	DESCRIPTION	
C152	4030006860	S.CERAMIC	C1608 JB 1H 102K-T-A
C153	4550006700	S.TANTALUM	ECST1AY106R
C154	4030006860	S.CERAMIC	C1608 JB 1H 102K-T-A
C155	4030006860	S.CERAMIC	C1608 JB 1H 102K-T-A
C157	4030009520	S.CERAMIC	C1608 CH 1H 020B-T-A
C158	4030009560	S.CERAMIC	C1608 CH 1H R75B-T-A
C159	4030009520	S.CERAMIC	C1608 CH 1H 020B-T-A
C160	4030009530	S.CERAMIC	C1608 CH 1H 030B-T-A
C161	4030009550	S.CERAMIC	C1608 CH 1H 2R5B-T-A
C162	4030006860	S.CERAMIC	C1608 JB 1H 102K-T-A
C163	4030007030	S.CERAMIC	C1608 CH 1H 150J-T-A
C164	4030007030	S.CERAMIC	C1608 CH 1H 150J-T-A
C166	4030009540	S.CERAMIC	C1608 CH 1H 1R5B-T-A
C167	4030009510	S.CERAMIC	C1608 CH 1H 010B-T-A
C168	4030009910	S.CERAMIC	C1608 CH 1H 040B-T-A
C169	4030007010	S.CERAMIC	C1608 CH 1H 100D-T-A
C170	4030006980	S.CERAMIC	C1608 CH 1H 070D-T-A
C171	4030006860	S.CERAMIC	C1608 JB 1H 102K-T-A
C172	4030006860	S.CERAMIC	C1608 JB 1H 102K-T-A
C173	4030011600	S.CERAMIC	C1608 JB 1C 104KT-N
C174	4030006860	S.CERAMIC	C1608 JB 1H 102K-T-A
C175	4030006860	S.CERAMIC	C1608 JB 1H 102K-T-A
C176	4030011600	S.CERAMIC	C1608 JB 1C 104KT-N
C177	4030006860	S.CERAMIC	C1608 JB 1H 102K-T-A
C178	4030006860	S.CERAMIC	C1608 JB 1H 102K-T-A
C179	4030007010	S.CERAMIC	C1608 CH 1H 100D-T-A
C180	4030009510	S.CERAMIC	C1608 CH 1H 010B-T-A
C181	4030007010	S.CERAMIC	C1608 CH 1H 100D-T-A
C182	4030009920	S.CERAMIC	C1608 CH 1H 050B-T-A
C183	4030006860	S.CERAMIC	C1608 JB 1H 102K-T-A
C185	4030009500	S.CERAMIC	C1608 CH 1H 0R5B-T-A
C186	4030007090	S.CERAMIC	C1608 CH 1H 470J-T-A
C187	4030011600	S.CERAMIC	C1608 JB 1C 104KT-N
C188	4030006860	S.CERAMIC	C1608 JB 1H 102K-T-A
C189	4030006860	S.CERAMIC	C1608 JB 1H 102K-T-A
C190	4030006860	S.CERAMIC	C1608 JB 1H 102K-T-A
C191	4030006860	S.CERAMIC	C1608 JB 1H 102K-T-A
C192	4030011600	S.CERAMIC	C1608 JB 1C 104KT-N
C193	4510006260	S.ELECTROLYTIC	ECEV1AA471UP
C194	4030007010	S.CERAMIC	C1608 CH 1H 100D-T-A
C195	4030009500	S.CERAMIC	C1608 CH 1H 0R5B-T-A
C196	4030009530	S.CERAMIC	C1608 CH 1H 030B-T-A
C197	4030009530	S.CERAMIC	C1608 CH 1H 030B-T-A
C198	4030006860	S.CERAMIC	C1608 JB 1H 102K-T-A
C199	4030007090	S.CERAMIC	C1608 CH 1H 470J-T-A
C200	4030011600	S.CERAMIC	C1608 JB 1C 104KT-N
C201	4030006860	S.CERAMIC	C1608 JB 1H 102K-T-A
C203	4030009500	S.CERAMIC	C1608 CH 1H 0R5B-T-A
C204	4030006860	S.CERAMIC	C1608 JB 1H 102K-T-A
C205	4030006860	S.CERAMIC	C1608 JB 1H 102K-T-A
C206	4030007050	S.CERAMIC	C1608 CH 1H 220J-T-A
C207	4030006900	S.CERAMIC	C1608 JB 1E 103K-T-A
C208	4030006900	S.CERAMIC	C1608 JB 1E 103K-T-A
C209	4030006900	S.CERAMIC	C1608 JB 1E 103K-T-A
C210	4030006880	S.CERAMIC	C1608 JB 1H 472K-T-A
C211	4030012600	S.CERAMIC	C2012 JB 1A 105M-T-A
C212	4030012600	S.CERAMIC	C2012 JB 1A 105M-T-A
C213	4030011600	S.CERAMIC	C1608 JB 1C 104KT-N
C214	4030006860	S.CERAMIC	C1608 JB 1H 102K-T-A
C215	4030006860	S.CERAMIC	C1608 JB 1H 102K-T-A
C216	4030006880	S.CERAMIC	C1608 JB 1H 472K-T-A
C217	4030011600	S.CERAMIC	C1608 JB 1C 104KT-N
C218	4510004630	S.ELECTROLYTIC	ECEV1CA100SR
C219	4030007050	S.CERAMIC	C1608 CH 1H 220J-T-A
C220	4030007050	S.CERAMIC	C1608 CH 1H 220J-T-A
C221	4030006860	S.CERAMIC	C1608 JB 1H 102K-T-A
C222	4030007010	S.CERAMIC	C1608 CH 1H 100D-T-A
C223	4030011600	S.CERAMIC	C1608 JB 1C 104KT-N
C224	4030006860	S.CERAMIC	C1608 JB 1H 102K-T-A
C225	4510006210	S.ELECTROLYTIC	ECEV1VA330UP
C226	4030006860	S.CERAMIC	C1608 JB 1H 102K-T-A
C227	4510006210	S.ELECTROLYTIC	ECEV1VA330UP
C228	4030006880	S.CERAMIC	C1608 JB 1H 472K-T-A
C229	4550006130	S.TANTALUM	ECST1VY224R
C230	4550006130	S.TANTALUM	ECST1VY224R
C231	4550006810	S.TANTALUM	ECST1VY473R
C232	4030006860	S.CERAMIC	C1608 JB 1H 102K-T-A
C233	4030006980	S.CERAMIC	C1608 CH 1H 070D-T-A
C234	4030006860	S.CERAMIC	C1608 JB 1H 102K-T-A
C235	4030006860	S.CERAMIC	C1608 JB 1H 102K-T-A
C236	4030009920	S.CERAMIC	C1608 CH 1H 050B-T-A
C238	4030006900	S.CERAMIC	C1608 JB 1E 103K-T-A

[RF UNIT]

REF NO.	ORDER NO.	DESCRIPTION	
C239	4030007050	S.CERAMIC	C1608 CH 1H 220J-T-A
C240	4030006900	S.CERAMIC	C1608 JB 1E 103K-T-A
C241	4030006900	S.CERAMIC	C1608 JB 1E 103K-T-A
C242	4030006900	S.CERAMIC	C1608 JB 1E 103K-T-A
C243	4030006900	S.CERAMIC	C1608 JB 1E 103K-T-A
C244	4030006900	S.CERAMIC	C1608 JB 1E 103K-T-A
C249	4030006900	S.CERAMIC	C1608 JB 1E 103K-T-A
C253	4030011600	S.CERAMIC	C1608 JB 1C 104KT-N
C254	4030011600	S.CERAMIC	C1608 JB 1C 104KT-N
C255	4030012600	S.CERAMIC	C2012 JB 1A 105M-T-A
C256	4030011600	S.CERAMIC	C1608 JB 1C 104KT-N
C257	4030011600	S.CERAMIC	C1608 JB 1C 104KT-N
C260	4030006900	S.CERAMIC	C1608 JB 1E 103K-T-A
C261	4030006900	S.CERAMIC	C1608 JB 1E 103K-T-A
C262	4030009990	S.CERAMIC	C1608 CH 1H 200J-T-A
C263	4030007020	S.CERAMIC	C1608 CH 1H 120J-T-A
C264	4030008560	S.CERAMIC	C1608 CH 1H 300J-T-A
C265	4030009920	S.CERAMIC	C1608 CH 1H 050B-T-A
C266	4030007040	S.CERAMIC	C1608 CH 1H 180J-T-A
C267	4030006980	S.CERAMIC	C1608 CH 1H 070D-T-A
C268	4030011600	S.CERAMIC	C1608 JB 1C 104KT-N
C269	4030011280	S.CERAMIC	C1608 CH 1H 271J-T-A
C270	4030011330	S.CERAMIC	C1608 CH 1H 391J-T-A
C271	4030009980	S.CERAMIC	C1608 JB 1H 152K-T-A
C272	4030007110	S.CERAMIC	C1608 CH 1H 680J-T-A
C273	4030011330	S.CERAMIC	C1608 CH 1H 391J-T-A
C274	4030010760	S.CERAMIC	C1608 CH 1H 331J-T-A
C275	4030006860	S.CERAMIC	C1608 JB 1H 102K-T-A
C277	4030011600	S.CERAMIC	C1608 JB 1C 104KT-N
C278	4030006880	S.CERAMIC	C1608 JB 1H 472K-T-A
C279	4030012600	S.CERAMIC	C2012 JB 1A 105M-T-A
C280	4030006880	S.CERAMIC	C1608 JB 1H 472K-T-A
C281	4510005870	S.ELECTROLYTIC	ECEV1HA3R3SR
C285	4030006880	S.CERAMIC	C1608 JB 1H 472K-T-A
C286	4030011810	S.CERAMIC	C1608 JB 1A 224K-T-N
C287	4030006880	S.CERAMIC	C1608 JB 1H 472K-T-A
C288	4030007110	S.CERAMIC	C1608 CH 1H 680J-T-A
C289	4030007170	S.CERAMIC	C1608 CH 1H 221J-T-A
C290	4030007090	S.CERAMIC	C1608 CH 1H 470J-T-A
C291	4030007140	S.CERAMIC	C1608 CH 1H 121J-T-A
C292	4030006900	S.CERAMIC	C1608 JB 1E 103K-T-A
C293	4030009520	S.CERAMIC	C1608 CH 1H 020B-T-A
C294	4510004650	S.ELECTROLYTIC	ECEV1EA4R7SR
C295	4030006880	S.CERAMIC	C1608 JB 1H 472K-T-A
C296	4030011600	S.CERAMIC	C1608 JB 1C 104KT-N
C297	4510004630	S.ELECTROLYTIC	ECEV1CA100SR
C298	4030006900	S.CERAMIC	C1608 JB 1E 103K-T-A
C299	4030006880	S.CERAMIC	C1608 JB 1H 472K-T-A
C300	4030006900	S.CERAMIC	C1608 JB 1E 103K-T-A
C301	4030007110	S.CERAMIC	C1608 CH 1H 680J-T-A
C302	4030006900	S.CERAMIC	C1608 JB 1E 103K-T-A
C303	4030006900	S.CERAMIC	C1608 JB 1E 103K-T-A
C304	4030006900	S.CERAMIC	C1608 JB 1E 103K-T-A
C305	4030006900	S.CERAMIC	C1608 JB 1E 103K-T-A
C306	4030009520	S.CERAMIC	C1608 CH 1H 020B-T-A
C308	4030006900	S.CERAMIC	C1608 JB 1E 103K-T-A
C309	4030006900	S.CERAMIC	C1608 JB 1E 103K-T-A
C310	4030011600	S.CERAMIC	C1608 JB 1C 104KT-N
C311	4030011600	S.CERAMIC	C1608 JB 1C 104KT-N
C312	4030011600	S.CERAMIC	C1608 JB 1C 104KT-N
C313	4030011600	S.CERAMIC	C1608 JB 1C 104KT-N
C314	4030011600	S.CERAMIC	C1608 JB 1C 104KT-N
C315	4030011600	S.CERAMIC	C1608 JB 1C 104KT-N
C316	4030011600	S.CERAMIC	C1608 JB 1C 104KT-N
C317	4030011330	S.CERAMIC	C1608 CH 1H 391J-T-A
C318	4030011600	S.CERAMIC	C1608 JB 1C 104KT-N
C319	4030011600	S.CERAMIC	C1608 JB 1C 104KT-N
C320	4030006880	S.CERAMIC	C1608 JB 1H 472K-T-A
C321	4030007040	S.CERAMIC	C1608 CH 1H 180J-T-A
C322	4030007070	S.CERAMIC	C1608 CH 1H 330J-T-A
C323	4030007070	S.CERAMIC	C1608 CH 1H 330J-T-A
C324	4030007150	S.CERAMIC	C1608 CH 1H 151J-T-A
C325	4030007170	S.CERAMIC	C1608 CH 1H 221J-T-A
C326	4030007170	S.CERAMIC	C1608 CH 1H 221J-T-A
C327	4030011340	S.CERAMIC	C1608 CH 1H 471J-T-A
C328	4030011600	S.CERAMIC	C1608 JB 1C 104KT-N
C329	4510006220	S.ELECTROLYTIC	ECEV1CA101UP
C330	4030011600	S.CERAMIC	C1608 JB 1C 104KT-N
C331	4030006900	S.CERAMIC	C1608 JB 1E 103K-T-A
C332	4030009530	S.CERAMIC	C1608 CH 1H 030B-T-A
C333	4030011600	S.CERAMIC	C1608 JB 1C 104KT-N
C334	4030006900	S.CERAMIC	C1608 JB 1E 103K-T-A

S.=Surface mount

[RF UNIT]

REF NO.	ORDER NO.	DESCRIPTION	
C335	4030007130	S.CERAMIC	C1608 CH 1H 101J-T-A
C336	4030006860	S.CERAMIC	C1608 JB 1H 102K-T-A
C337	4030006860	S.CERAMIC	C1608 JB 1H 102K-T-A
C341	4030006900	S.CERAMIC	C1608 JB 1E 103K-T-A
C342	4030008880	S.CERAMIC	C1608 JB 1C 223K-T-A
C343	4030008880	S.CERAMIC	C1608 JB 1C 223K-T-A
C344	4030011600	S.CERAMIC	C1608 JB 1C 104KT-N
C345	4030006900	S.CERAMIC	C1608 JB 1E 103K-T-A
C346	4510004630	S.ELECTROLYTIC	ECEV1CA100SR
C347	4030006900	S.CERAMIC	C1608 JB 1E 103K-T-A
C348	4510004630	S.ELECTROLYTIC	ECEV1CA100SR
C351	4030011600	S.CERAMIC	C1608 JB 1C 104KT-N
C352	4030011600	S.CERAMIC	C1608 JB 1C 104KT-N
C353	4030011310	S.CERAMIC	C2012 JB 1A 564K-T-A
C354	4030006870	S.CERAMIC	C1608 JB 1H 222K-T-A
C355	4030011600	S.CERAMIC	C1608 JB 1C 104KT-N
C357	4030008770	S.CERAMIC	C1608 JB 1H 562K-T-A
C358	4510004650	S.ELECTROLYTIC	ECEV1EA4R7SR
C359	4030011600	S.CERAMIC	C1608 JB 1C 104KT-N
C360	4030006900	S.CERAMIC	C1608 JB 1E 103K-T-A
C362	4030011600	S.CERAMIC	C1608 JB 1C 104KT-N
C363	4030011600	S.CERAMIC	C1608 JB 1C 104KT-N
C365	4030011600	S.CERAMIC	C1608 JB 1C 104KT-N
C366	4030006850	S.CERAMIC	C1608 JB 1H 471K-T-A
C367	4030011600	S.CERAMIC	C1608 JB 1C 104KT-N
C371	4030011810	S.CERAMIC	C1608 JB 1A 224K-T-N
C372	4510005870	S.ELECTROLYTIC	ECEV1HA3R3SR
C373	4030006900	S.CERAMIC	C1608 JB 1E 103K-T-A
C374	4030006880	S.CERAMIC	C1608 JB 1H 472K-T-A
C375	4030007170	S.CERAMIC	C1608 CH 1H 221J-T-A
C377	4030011600	S.CERAMIC	C1608 JB 1C 104KT-N
C378	4030006880	S.CERAMIC	C1608 JB 1H 472K-T-A
C379	4030006880	S.CERAMIC	C1608 JB 1H 472K-T-A
C380	4030011600	S.CERAMIC	C1608 JB 1C 104KT-N
C381	4030011600	S.CERAMIC	C1608 JB 1C 104KT-N
C382	4030011600	S.CERAMIC	C1608 JB 1C 104KT-N
C383	4030012610	S.CERAMIC	C2012 JB 1C 474K-T-A
C384	4030011600	S.CERAMIC	C1608 JB 1C 104KT-N
C386	4030011600	S.CERAMIC	C1608 JB 1C 104KT-N
C387	4030011600	S.CERAMIC	C1608 JB 1C 104KT-N
C388	4030011600	S.CERAMIC	C1608 JB 1C 104KT-N
C389	4030006860	S.CERAMIC	C1608 JB 1H 102K-T-A
C390	4030006860	S.CERAMIC	C1608 JB 1H 102K-T-A
C391	4030011600	S.CERAMIC	C1608 JB 1C 104KT-N
C392	4030011810	S.CERAMIC	C1608 JB 1A 224K-T-N
C393	4030006860	S.CERAMIC	C1608 JB 1H 102K-T-A
C394	4510004630	S.ELECTROLYTIC	ECEV1CA100SR
C395	4030007110	S.CERAMIC	C1608 CH 1H 680J-T-A
C396	4030012610	S.CERAMIC	C2012 JB 1C 474K-T-A
C428	4530000400	S.ARRAY	EZANCE 220M 22P
C429	4530000400	S.ARRAY	EZANCE 220M 22P
C430	4530000400	S.ARRAY	EZANCE 220M 22P
C431	4530000400	S.ARRAY	EZANCE 220M 22P
C433	4530000410	S.ARRAY	EZANCE 471M 470P
C434	4530000420	S.ARRAY	NFA41R10C104
C435	4530000400	S.ARRAY	EZANCE 220M 22P
C436	4530000420	S.ARRAY	NFA41R10C104
C470	4550006700	S.TANTALUM	ECST1AY106R
C471	4030006860	S.CERAMIC	C1608 JB 1H 102K-T-A
C475	4030011600	S.CERAMIC	C1608 JB 1C 104KT-N
C476	4030011600	S.CERAMIC	C1608 JB 1C 104KT-N
C481	4030011600	S.CERAMIC	C1608 JB 1C 104KT-N
C483	4030011600	S.CERAMIC	C1608 JB 1C 104KT-N
C484	4030011600	S.CERAMIC	C1608 JB 1C 104KT-N
C486	4030011600	S.CERAMIC	C1608 JB 1C 104KT-N
C488	4030011600	S.CERAMIC	C1608 JB 1C 104KT-N
C490	4030011600	S.CERAMIC	C1608 JB 1C 104KT-N
C492	4030011600	S.CERAMIC	C1608 JB 1C 104KT-N
C494	4030011600	S.CERAMIC	C1608 JB 1C 104KT-N
C496	4030007090	S.CERAMIC	C1608 CH 1H 470J-T-A
C497	4030007090	S.CERAMIC	C1608 CH 1H 470J-T-A
C498	4030007020	S.CERAMIC	C1608 CH 1H 120J-T-A
C499	4030009920	S.CERAMIC	C1608 CH 1H 050B-T-A
C500	4030007170	S.CERAMIC	C1608 CH 1H 221J-T-A
C501	4030007100	S.CERAMIC	C1608 CH 1H 560J-T-A
C502	4030007110	S.CERAMIC	C1608 CH 1H 680J-T-A
C503	4030007100	S.CERAMIC	C1608 CH 1H 560J-T-A
C504	4030007050	S.CERAMIC	C1608 CH 1H 220J-T-A
C505	4030006900	S.CERAMIC	C1608 JB 1E 103K-T-A
C506	4030011600	S.CERAMIC	C1608 JB 1C 104KT-N
C508	4030011600	S.CERAMIC	C1608 JB 1C 104KT-N
C511	4030011600	S.CERAMIC	C1608 JB 1C 104KT-N

[RF UNIT]

REF NO.	ORDER NO.	DESCRIPTION	
C512	4030011600	S.CERAMIC	C1608 JB 1C 104KT-N
C514	4030011600	S.CERAMIC	C1608 JB 1C 104KT-N
C516	4030012600	S.CERAMIC	C2012 JB 1A 105M-T-A
C517	4030006860	S.CERAMIC	C1608 JB 1H 102K-T-A
C518	4030007050	S.CERAMIC	C1608 CH 1H 220J-T-A
C519	4030006900	S.CERAMIC	C1608 JB 1E 103K-T-A
C520	4030006900	S.CERAMIC	C1608 JB 1E 103K-T-A
C521	4030006860	S.CERAMIC	C1608 JB 1H 102K-T-A
C522	4030006900	S.CERAMIC	C1608 JB 1E 103K-T-A
C523	4030006860	S.CERAMIC	C1608 JB 1H 102K-T-A
C524	4510006210	S.ELECTROLYTIC	ECEV1VA330UP
C525	4030006860	S.CERAMIC	C1608 JB 1H 102K-T-A
C526	4510006210	S.ELECTROLYTIC	ECEV1VA330UP
C527	4030006880	S.CERAMIC	C1608 JB 1H 472K-T-A
C528	4550006460	S.TANTALUM	ECST1VX225R
C529	4550006460	S.TANTALUM	ECST1VX225R
C531	4030006860	S.CERAMIC	C1608 JB 1H 102K-T-A
C532	4030007050	S.CERAMIC	C1608 CH 1H 220J-T-A
C533	4030007010	S.CERAMIC	C1608 CH 1H 100D-T-A
C534	4030006980	S.CERAMIC	C1608 CH 1H 070D-T-A
C535	4030006860	S.CERAMIC	C1608 JB 1H 102K-T-A
C536	4510006220	S.ELECTROLYTIC	ECEV1CA101UP
C537	4030011600	S.CERAMIC	C1608 JB 1C 104KT-N
C538	4030006860	S.CERAMIC	C1608 JB 1H 102K-T-A
C539	4030011600	S.CERAMIC	C1608 JB 1C 104KT-N
C540	4030009510	S.CERAMIC	C1608 CH 1H 010B-T-A
C541	4030006860	S.CERAMIC	C1608 JB 1H 102K-T-A
C542	4030007050	S.CERAMIC	C1608 CH 1H 220J-T-A
C543	4030006860	S.CERAMIC	C1608 JB 1H 102K-T-A
C544	4030011600	S.CERAMIC	C1608 JB 1C 104KT-N
C545	4030006900	S.CERAMIC	C1608 JB 1E 103K-T-A
C546	4030011600	S.CERAMIC	C1608 JB 1C 104KT-N
C547	4030006880	S.CERAMIC	C1608 JB 1H 472K-T-A
C548	4030006860	S.CERAMIC	C1608 JB 1H 102K-T-A
C549	4030006860	S.CERAMIC	C1608 JB 1H 102K-T-A
C550	4030006860	S.CERAMIC	C1608 JB 1H 102K-T-A
C551	4030009910	S.CERAMIC	C1608 CH 1H 040B-T-A
C553	4030007010	S.CERAMIC	C1608 CH 1H 100D-T-A
C554	4030007030	S.CERAMIC	C1608 CH 1H 150J-T-A
C556	4030006880	S.CERAMIC	C1608 JB 1H 472K-T-A
C557	4030007150	S.CERAMIC	C1608 CH 1H 151J-T-A
C558	4030007120	S.CERAMIC	C1608 CH 1H 820J-T-A
C559	4030011280	S.CERAMIC	C1608 CH 1H 271J-T-A
C560	4030007140	S.CERAMIC	C1608 CH 1H 121J-T-A
C561	4030012600	S.CERAMIC	C2012 JB 1A 105M-T-A
C562	4030006860	S.CERAMIC	C1608 JB 1H 102K-T-A
C564	4030011600	S.CERAMIC	C1608 JB 1C 104KT-N
C565	4030011600	S.CERAMIC	C1608 JB 1C 104KT-N
C567	4030006860	S.CERAMIC	C1608 JB 1H 102K-T-A
C568	4030011600	S.CERAMIC	C1608 JB 1C 104KT-N
C569	4550006700	S.TANTALUM	ECST1AY106R
C572	4030011600	S.CERAMIC	C1608 JB 1C 104KT-N
C583	4030006860	S.CERAMIC	C1608 JB 1H 102K-T-A
C584	4030011600	S.CERAMIC	C1608 JB 1C 104KT-N
C586	4030011600	S.CERAMIC	C1608 JB 1C 104KT-N
C592	4030011600	S.CERAMIC	C1608 JB 1C 104KT-N
C593	4030006880	S.CERAMIC	C1608 JB 1H 472K-T-A
C594	4030011600	S.CERAMIC	C1608 JB 1C 104KT-N
C595	4030006900	S.CERAMIC	C1608 JB 1E 103K-T-A
C597	4030007070	S.CERAMIC	C1608 CH 1H 330J-T-A
C600	4030006860	S.CERAMIC	C1608 JB 1H 102K-T-A
C601	4030006860	S.CERAMIC	C1608 JB 1H 102K-T-A
C602	4030009910	S.CERAMIC	C1608 CH 1H 040B-T-A
C603	4510004630	S.ELECTROLYTIC	ECEV1CA100SR
C604	4030011600	S.CERAMIC	C1608 JB 1C 104KT-N
C605	4030006860	S.CERAMIC	C1608 JB 1H 102K-T-A
C606	4030007040	S.CERAMIC	C1608 CH 1H 180J-T-A
C607	4030011600	S.CERAMIC	C1608 JB 1C 104KT-N
C609	4030006860	S.CERAMIC	C1608 JB 1H 102K-T-A
C610	4030007010	S.CERAMIC	C1608 CH 1H 100D-T-A
C611	4030006860	S.CERAMIC	C1608 JB 1H 102K-T-A
C612	4030006860	S.CERAMIC	C1608 JB 1H 102K-T-A
C613	4030006880	S.CERAMIC	C1608 JB 1H 472K-T-A
C616	4030006900	S.CERAMIC	C1608 JB 1E 103K-T-A
C617	4030006860	S.CERAMIC	C1608 JB 1H 102K-T-A
C618	4030007090	S.CERAMIC	C1608 CH 1H 470J-T-A
C621	4030006880	S.CERAMIC	C1608 JB 1H 472K-T-A
C622	4030008920	S.CERAMIC	C1608 JB 1C 473K-T-A
C623	4030006860	S.CERAMIC	C1608 JB 1H 102K-T-A
C624	4030011600	S.CERAMIC	C1608 JB 1C 104KT-N
C625	4030006860	S.CERAMIC	C1608 JB 1H 102K-T-A
C626	4030006860	S.CERAMIC	C1608 JB 1H 102K-T-A

S.=Surface mount

[RF UNIT]

REF NO.	ORDER NO.	DESCRIPTION	
C627	4030007050	S.CERAMIC	C1608 CH 1H 220J-T-A
C628	4030007010	S.CERAMIC	C1608 CH 1H 100D-T-A
C630	4030007080	S.CERAMIC	C1608 CH 1H 390J-T-A
C631	4030007130	S.CERAMIC	C1608 CH 1H 101J-T-A
C632	4030006860	S.CERAMIC	C1608 JB 1H 102K-T-A
C633	4030011600	S.CERAMIC	C1608 JB 1C 104KT-N
C634	4030007160	S.CERAMIC	C1608 CH 1H 181J-T-A
C635	4030006860	S.CERAMIC	C1608 JB 1H 102K-T-A
C636	4030007090	S.CERAMIC	C1608 CH 1H 470J-T-A
C637	4030006860	S.CERAMIC	C1608 JB 1H 102K-T-A
C638	4030006860	S.CERAMIC	C1608 JB 1H 102K-T-A
C640	4030006900	S.CERAMIC	C1608 JB 1E 103K-T-A
C641	4030006900	S.CERAMIC	C1608 JB 1E 103K-T-A
C642	4030006860	S.CERAMIC	C1608 JB 1H 102K-T-A
C643	4030006860	S.CERAMIC	C1608 JB 1H 102K-T-A
C644	4030006860	S.CERAMIC	C1608 JB 1H 102K-T-A
C645	4030006860	S.CERAMIC	C1608 JB 1H 102K-T-A
C646	4030007110	S.CERAMIC	C1608 CH 1H 680J-T-A
C647	4030011600	S.CERAMIC	C1608 JB 1C 104KT-N
C648	4030011600	S.CERAMIC	C1608 JB 1C 104KT-N
C649	4030011280	S.CERAMIC	C1608 CH 1H 271J-T-A
C650	4030011600	S.CERAMIC	C1608 JB 1C 104KT-N
C651	4030007130	S.CERAMIC	C1608 CH 1H 101J-T-A
C652	4030007130	S.CERAMIC	C1608 CH 1H 101J-T-A
C653	4030006900	S.CERAMIC	C1608 JB 1E 103K-T-A
C654	4550006700	S.TANTALUM	ECST1AY106R
C655	4030009920	S.CERAMIC	C1608 CH 1H 050B-T-A
C656	4030006860	S.CERAMIC	C1608 JB 1H 102K-T-A
C657	4030009520	S.CERAMIC	C1608 CH 1H 020B-T-A
C659	4030006860	S.CERAMIC	C1608 JB 1H 102K-T-A
C660	4030006860	S.CERAMIC	C1608 JB 1H 102K-T-A
C661	4030011600	S.CERAMIC	C1608 JB 1C 104KT-N
C663	4030011600	S.CERAMIC	C1608 JB 1C 104KT-N
C664	4030011600	S.CERAMIC	C1608 JB 1C 104KT-N
C665	4550006810	S.TANTALUM	ECST1VY473R
C667	4030009920	S.CERAMIC	C1608 CH 1H 050B-T-A
C669	4030007010	S.CERAMIC	C1608 CH 1H 100D-T-A
C670	4030007010	S.CERAMIC	C1608 CH 1H 100D-T-A
C671	4030007010	S.CERAMIC	C1608 CH 1H 100D-T-A
C672	4030007010	S.CERAMIC	C1608 CH 1H 100D-T-A
C673	4030007010	S.CERAMIC	C1608 CH 1H 100D-T-A
C674	4030007010	S.CERAMIC	C1608 CH 1H 100D-T-A
C675	4030006860	S.CERAMIC	C1608 JB 1H 102K-T-A
C676	4030006860	S.CERAMIC	C1608 JB 1H 102K-T-A
C677	4030009510	S.CERAMIC	C1608 CH 1H 010B-T-A
C678	4030006860	S.CERAMIC	C1608 JB 1H 102K-T-A
C679	4030006860	S.CERAMIC	C1608 JB 1H 102K-T-A
C680	4030010760	S.CERAMIC	C1608 CH 1H 331J-T-A
C681	4030009510	S.CERAMIC	C1608 CH 1H 010B-T-A
C682	4030007070	S.CERAMIC	C1608 CH 1H 330J-T-A
C683	4030006860	S.CERAMIC	C1608 JB 1H 102K-T-A
C684	4030006850	S.CERAMIC	C1608 JB 1H 471K-T-A
C685	4030006850	S.CERAMIC	C1608 JB 1H 471K-T-A
C686	4030006850	S.CERAMIC	C1608 JB 1H 471K-T-A
C687	4030007010	S.CERAMIC	C1608 CH 1H 100D-T-A
C688	4030007010	S.CERAMIC	C1608 CH 1H 100D-T-A
J1	6510020530	S.CONNECTOR	52808-1890
J2	6510020530	S.CONNECTOR	52808-1890
J5	6510006360	CONNECTOR	TMP-J02X-A1
W2	7030003860	S.JUMPER	ERJ3GE JPW V
W3	7030003860	S.JUMPER	ERJ3GE JPW V
W4	7030003860	S.JUMPER	ERJ3GE JPW V
W5	7030003860	S.JUMPER	ERJ3GE JPW V
W6	7030003860	S.JUMPER	ERJ3GE JPW V
W7	7030003860	S.JUMPER	ERJ3GE JPW V
EP1	0910049015	PCB	B 5015E

S.=Surface mount

SECTION 7 MECHANICAL PARTS AND DISASSEMBLY

7-1 CABINET PARTS

[LOGIC UNIT]

REF NO.	ORDER NO.	DESCRIPTION	QTY.
MP 1	8930044920	2032 Coil cover	1
MP 2	8930014140	Grounding spring (D)	1
MP 3	8950004610	S-5 (Wiresticker)	1

[RF UNIT]

REF NO.	ORDER NO.	DESCRIPTION	QTY.
MP 1	8510007950	1312 VCO case	1
MP 2	8510010850	1897 D/A case	2
MP 3	8510004280	VCO case (A)	1
MP 4	8510011160	1897 PLL shield case	1
MP 5	8930043100	Sponge (EU)	2
MP 6	8930014140	Grounding spring (D)	1
MP 7	8510010460	1691 Main shield plate	3
MP 8	8930024170	Grounding spring (G)	1
MP 9	8930027730	Sponge (DC)	1

[CHASSIS]

REF NO.	ORDER NO.	DESCRIPTION	QTY.
J 1	6510015550	Connector BNC-R117 (incl. nut)	1
S 1	2260002400	Switch DS850K-S-LG	1
W 7	8900007640	OPC-740 cable	1
W 8	8900007640	OPC-740 cable	1
MP 1	8110006250	2032 Cover	1
MP 2	8510011390	2032 Case	1
MP 3	8510011370	2032 Shield cover	1
MP 6	8930039620	Leg cushion (A)	4
MP 7	8930009630	SP net	1
MP 8	8930044120	Sponge (FI)	1
MP 9	8810008960	Screw FH M2.6×5 ZK	8
MP10	8810008630	Screw FH BT M3×6 NI-ZU	7
MP11	8810008680	Screw PH M3×8 NI 5	
MP12	8850001560	Star washer M4	1
MP13	8850000140	Flat washer M4 NI BS	1
MP14	8820000530	Hexagon bolt M4 × 8 NI	1
MP15	8930044790	Sheet BR	1
MP16	8930044780	2032 Sponge	1
MP18	8930015640	Code holder	1
MP19	8930043100	Sponge (EU)	1
MP20	8930018570	Cushion sheet (D)	1
MP22	8930045500	2032 SHIELD PLATE	2
SP 1	2510001020	Speaker SV-36W0843	1
WS 1	8600036000	Code P01CH	1
WS 2	8600036010	Code P02CH	1

Screw abbreviations: PH: Pan head FH: Flat head
NI: Nickel ZK: Black

7-2 ACCESSORIES

REF NO.	ORDER NO.	DESCRIPTION	QTY.
F1	5210000040	Fuse FGB 2A [EUR]	2
P1	5610000020	Connector AP313 3.5ϕ CS plug	1
W1	8900007650	RS-232C cable OPC-743	1
W2	8900001410	DC cable OPC-131 [EUR]	1
EP1	3310001920	2032 Antenna	1
EP2		3.5" FD 40MF2HDGEDV	1set
EP3	Optional product	AC adaptor BC-123A/BM-104A [USA]	1
		AC adaptor BC-123E/BM-104E [OTH]	1

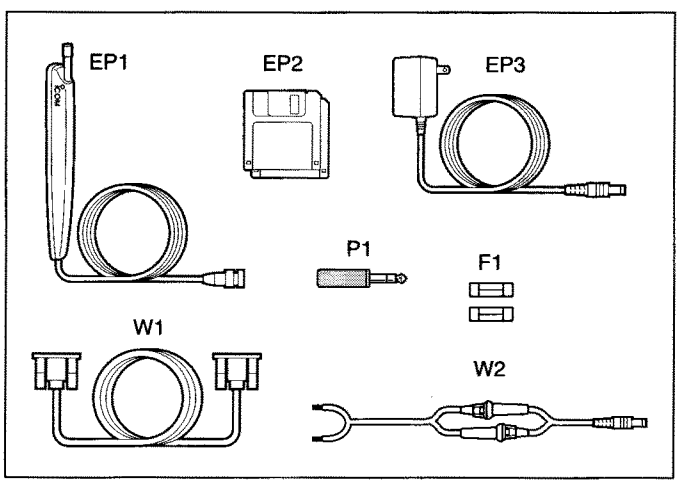

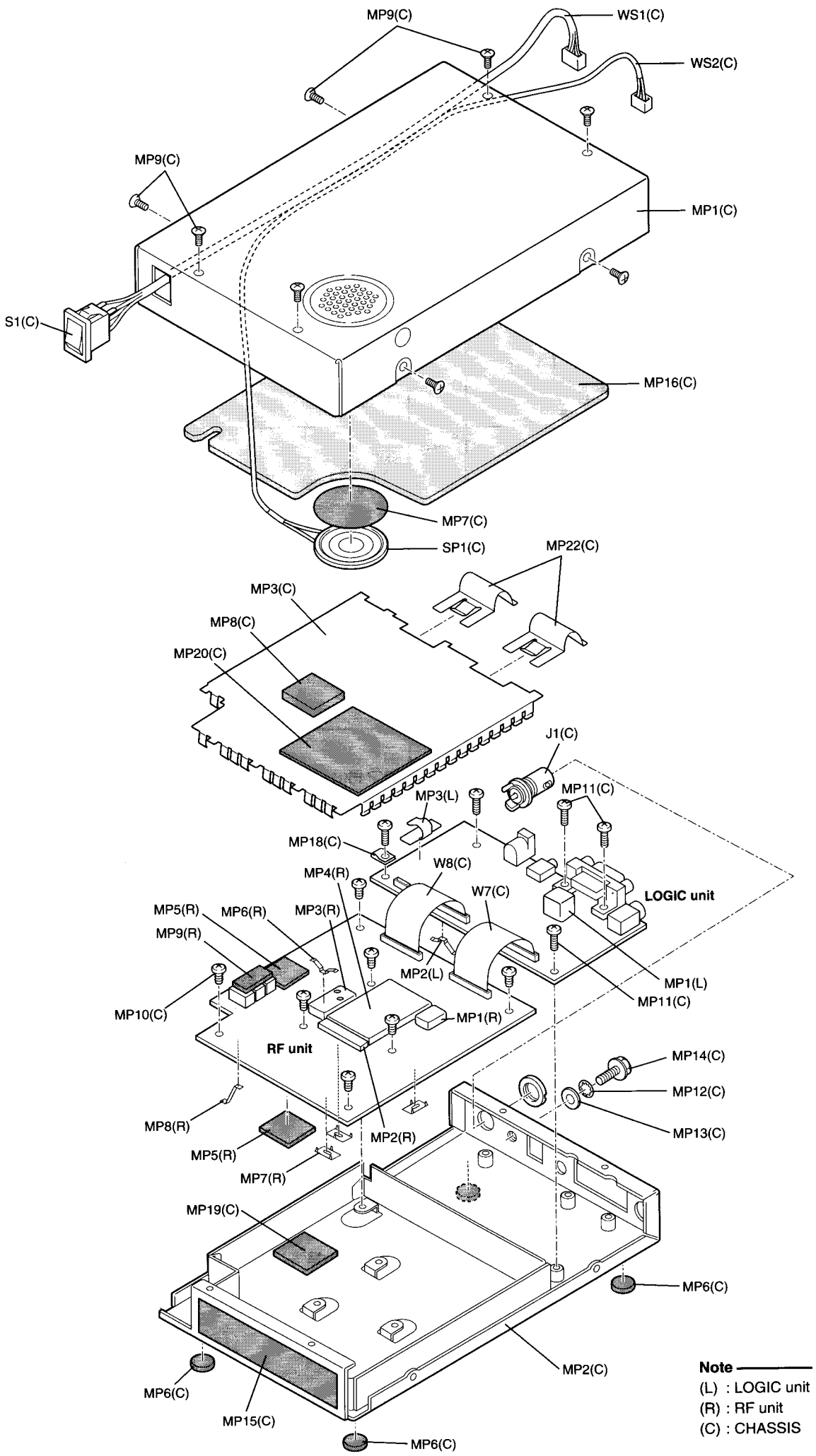
MP9(C)
WS1(C)
WS2(C)
MP9(C)
MP1(C)
S1(C)
MP16(C)
MP7(C)
SP1(C)
MP22(C)
MP3(C)
MP8(C)
MP20(C)
J1(C)
MP3(L)
MP11(C)
MP18(C)
W8(C)
MP4(R)
W7(C)
LOGIC unit
MP5(R)
MP6(R)
MP3(R)
MP9(R)
MP2(L)
MP1(L)
MP11(C)
MP10(C)
MP1(R)
RF unit
MP14(C)
MP12(C)
MP8(R)
MP13(C)
MP2(R)
MP5(R)
MP7(R)
MP19(C)
MP6(C)
MP2(C)
MP6(C)
MP15(C)
MP6(C)
Note
(L) : LOGIC unit
(R) : RF unit
(C) : CHASSIS

SECTION 8 SEMI-CONDUCTOR INFORMATION

8-1 TRANSISTORS AND FET'S

NAME	SYMBOL	INSIDE VIEW
2SA1622-6-TL	M6	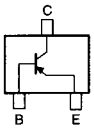
2SB1123T-TD	BF	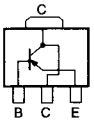
2SC4117-BL 2SC4211-6 2SC4835-R 2SC5193-T1	CL L6 3M T88	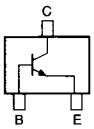
2SK2171-4-TD	KM	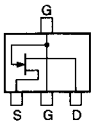
2SK880-Y 2SK882-GR	XY TG	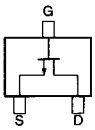
3SK131-T2 3SK228XR	V12 XR	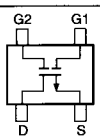

NAME	SYMBOL	INSIDE VIEW
DTA114EU	26	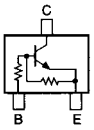
DTA144EU	16	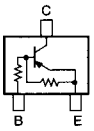
XP1114	7Q	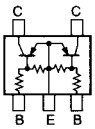
XP1213	9L	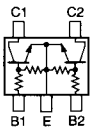
XP4311	7X	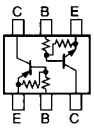
XP4601	5C	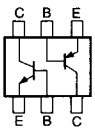

8-2 DIODES

NAME	SYMBOL	INSIDE VIEW
1SR154-400 1SS355 1SV307 DAN222TL	14 A TX N-4	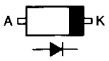
1SS272 1SV237	A1 BB	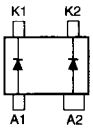
1SS375-TL	FH	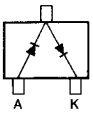
1SV214 1SV230 1SV288	T1 T7 TJ	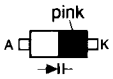

NAME	SYMBOL	INSIDE VIEW
1SV217	T6	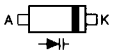
MA77	4B	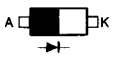
MA8051-M	5-1	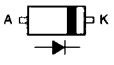
MA862	M1L	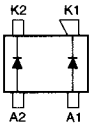

SECTION 9 BOARD LAYOUTS

The combination of this page and the next page shows the unit layout in the same configuration as the actual P.C. Board.

9-1 LOGIC UNIT

• TOP VIEW

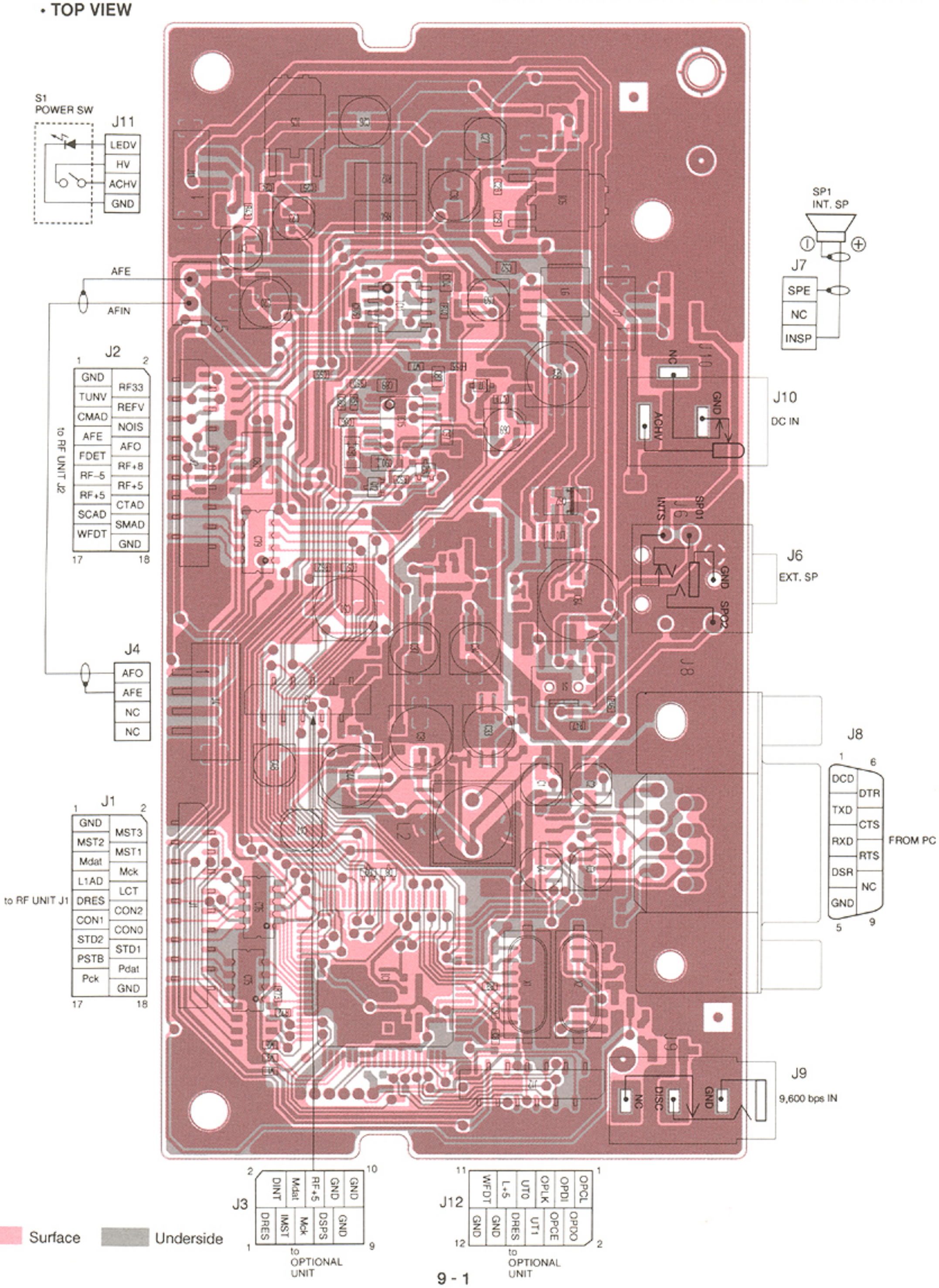

• BOTTOM VIEW

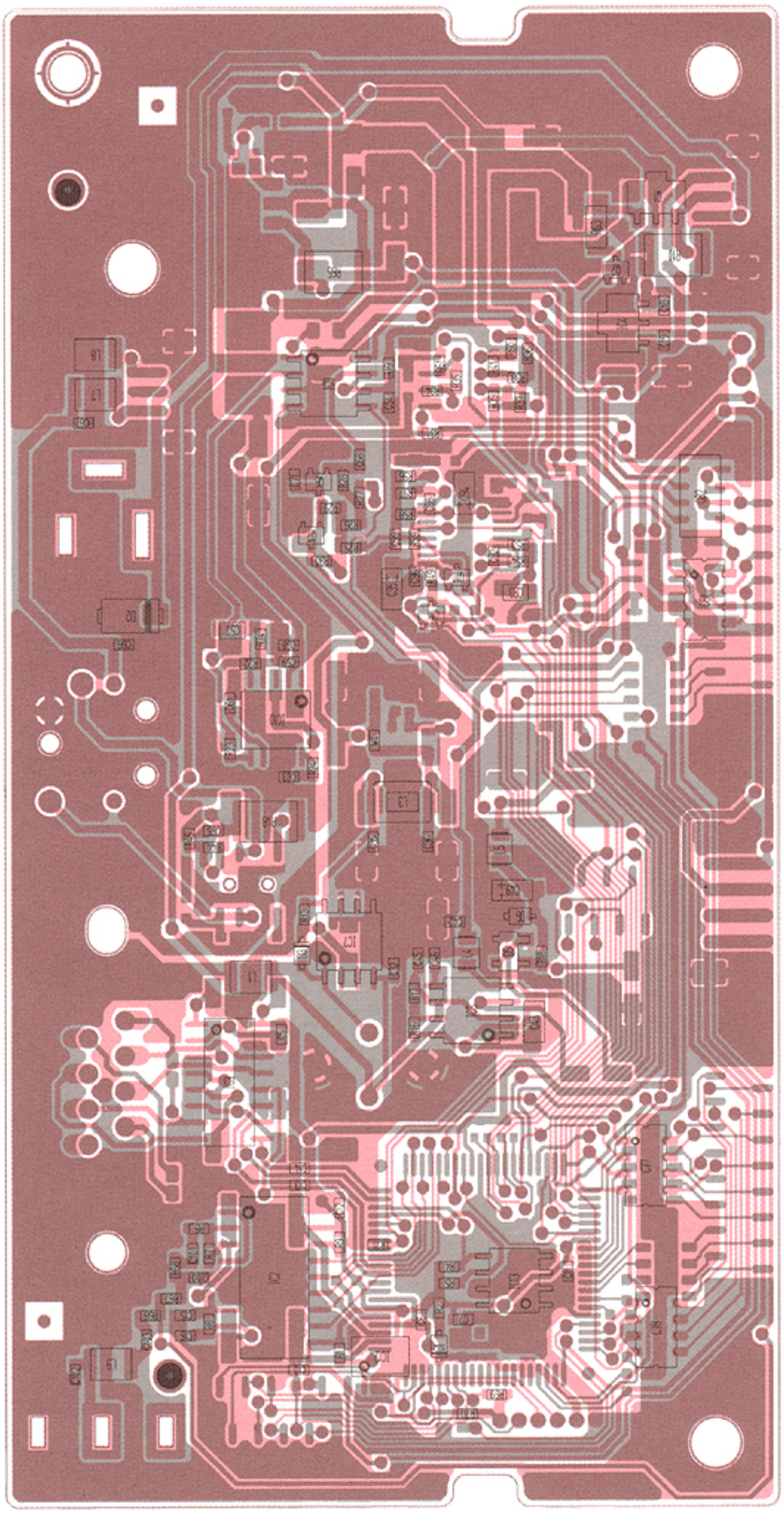

Surface Underside

9-2 RF UNIT

• TOP VIEW

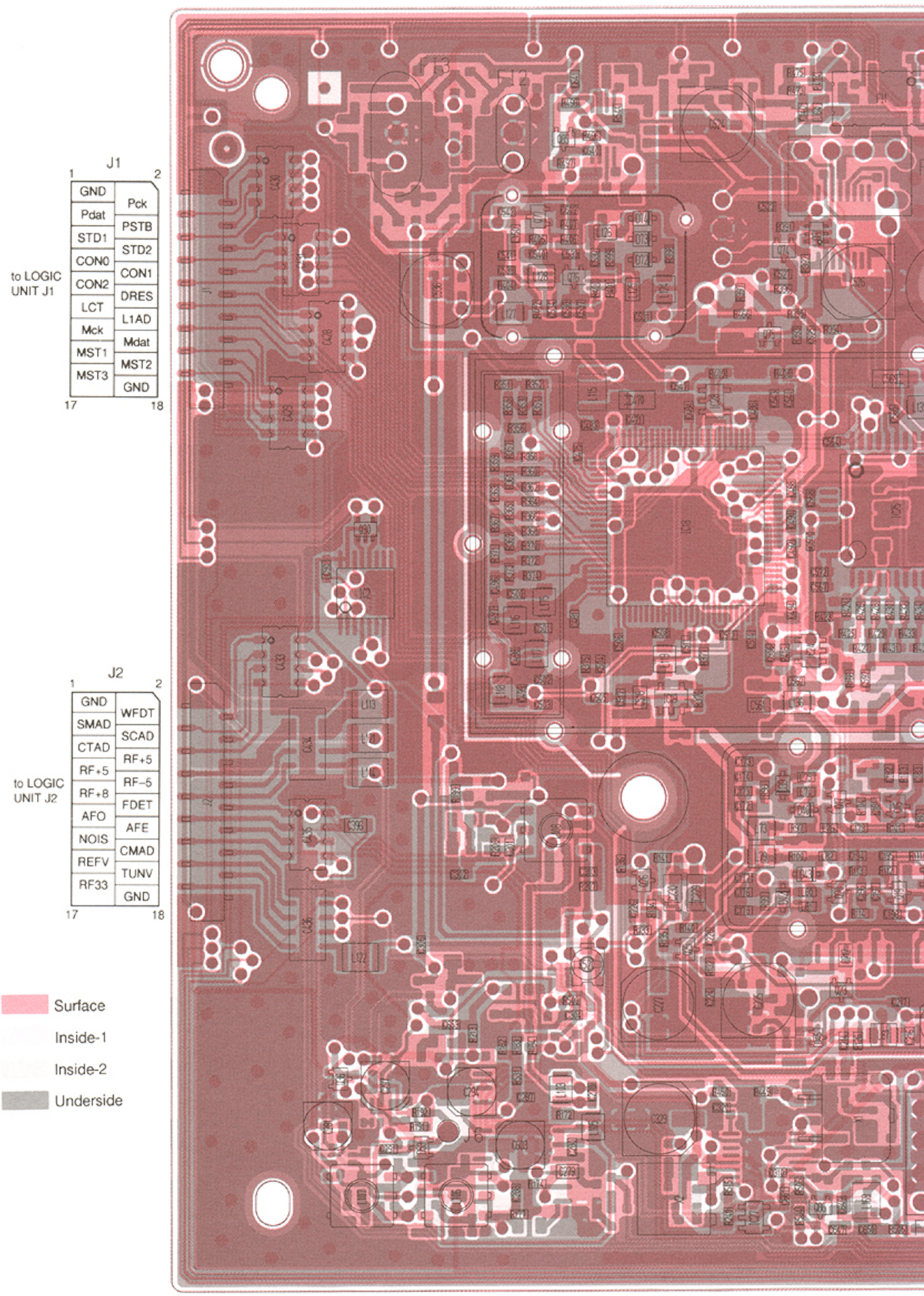

The combination of this page and the next page shows the unit layout in the same configuration as the actual P.C. Board.

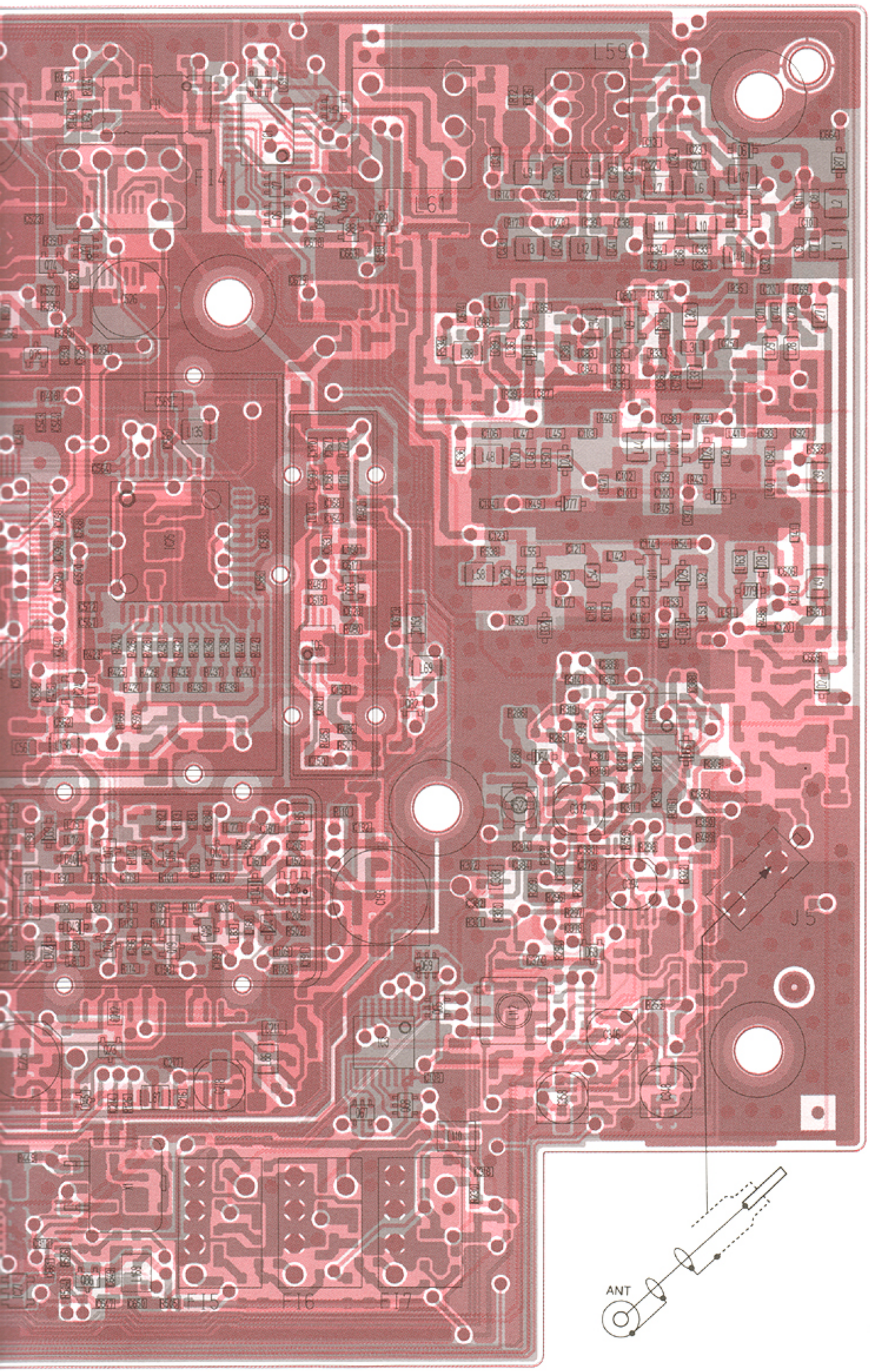

• BOTTOM VIEW

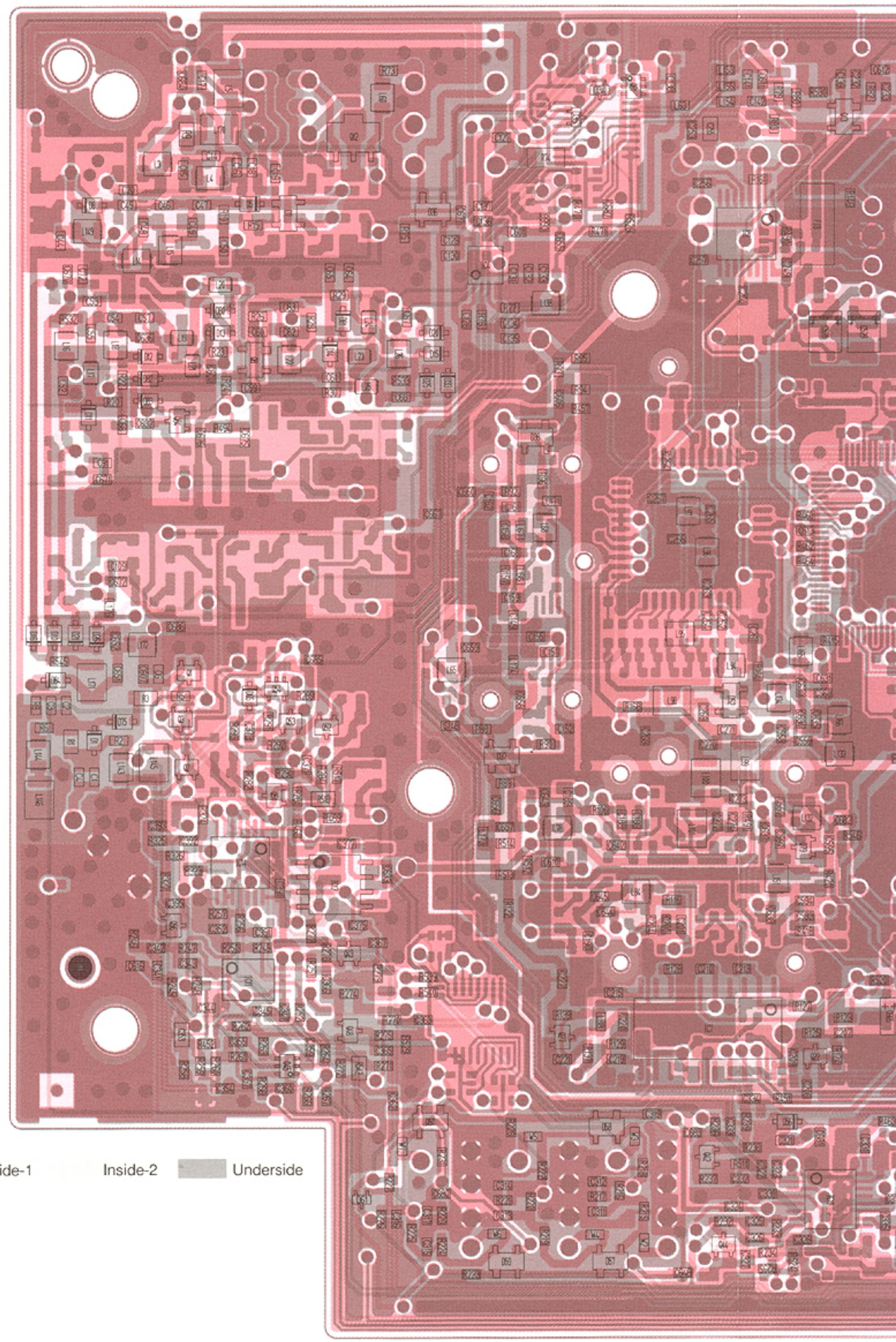

Surface Inside-1 Inside-2 Underside

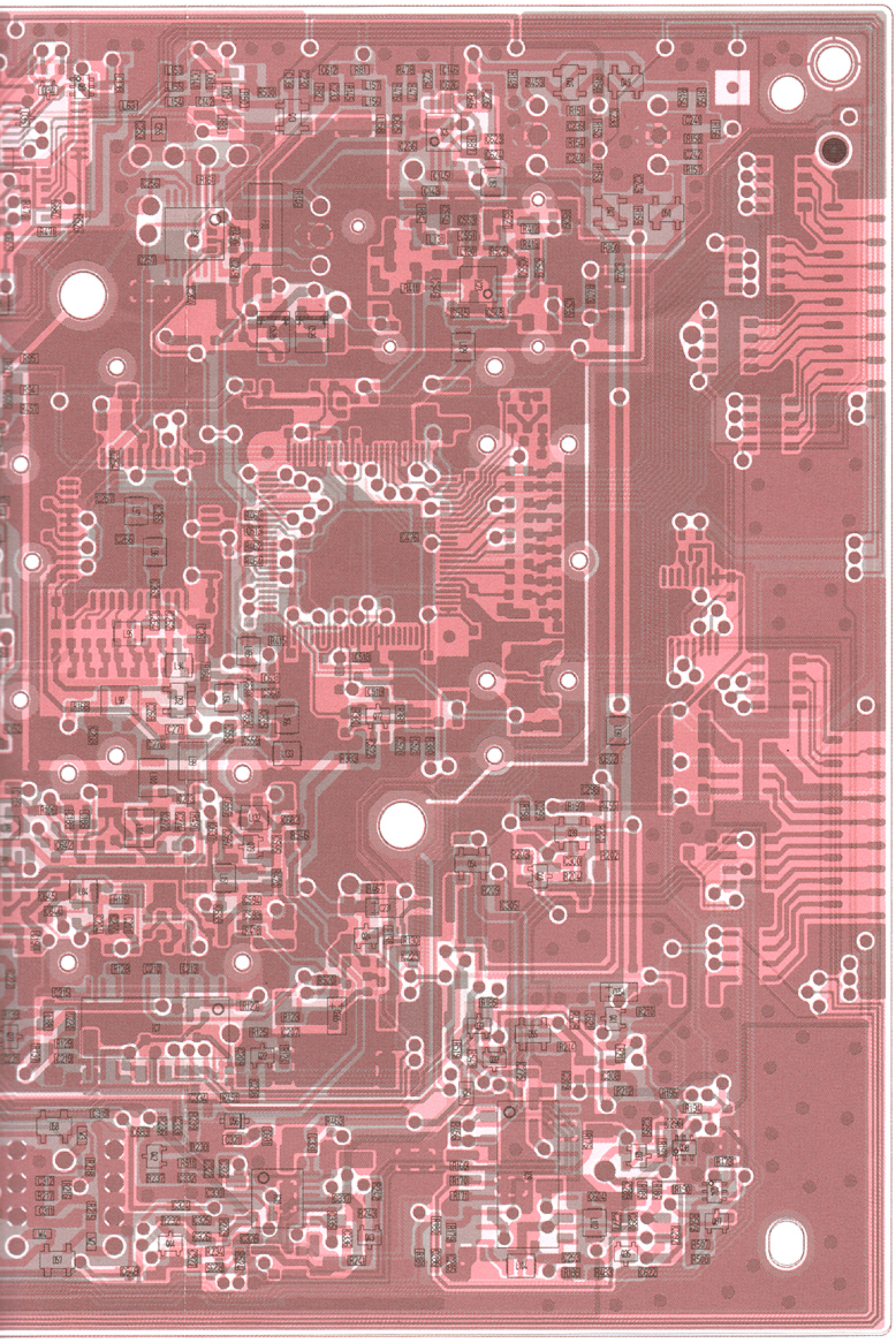

SECTION 10 BLOCK DIAGRAM

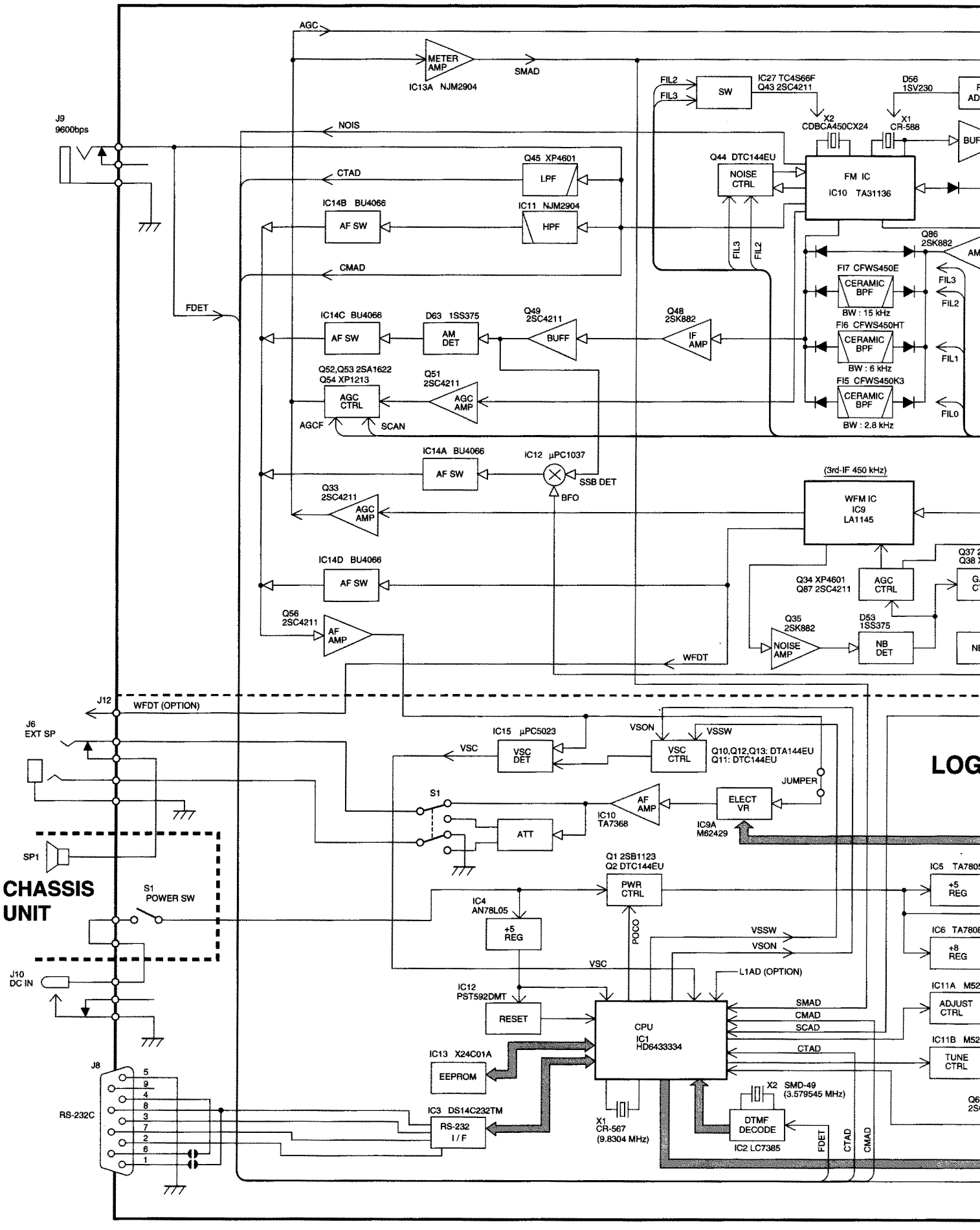

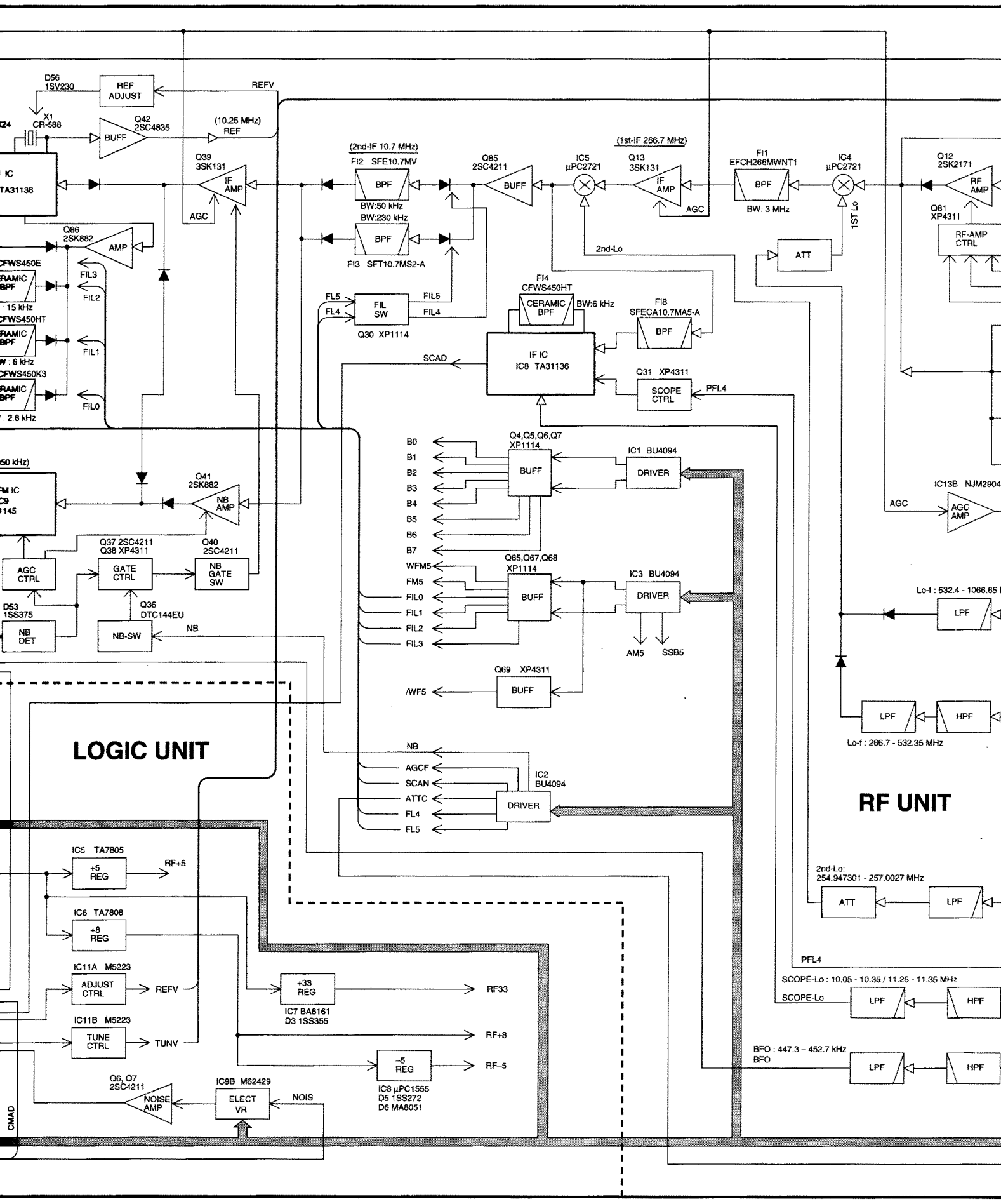
D56
1SV230
REF
ADJUST
REFV
X1
CR-588
Q42
2SC4835
BUFF
(10.25 MHz)
REF
IC
TA31136
Q39
3SK131
IF
AMP
AGC
(2nd-IF 10.7 MHz)
FI2 SFE10.7MV
BPF
BW:50 kHz
BW:230 kHz
BPF
FI3 SFT10.7MS2-A
Q85
2SC4211
BUFF
IC5
μPC2721
(1st-IF 266.7 MHz)
Q13
3SK131
IF
AMP
AGC
FI1
EFCH266MWNT1
BPF
BW: 3 MHz
IC4
μPC2721
1ST Lo
Q12
2SK2171
RF
AMP
Q81
XP4311
RF-AMP
CTRL
Q86
2SK882
AMP
CFWS450E
RAMIC
BPF
15 kHz
CFWS450HT
RAMIC
BPF
W : 6 kHz
CFWS450K3
RAMIC
BPF
2.8 kHz
FIL3
FIL2
FIL1
FIL0
2nd-Lo
ATT
FI4
CFWS450HT
CERAMIC
BPF
BW:6 kHz
FI8
SFECA10.7MA5-A
BPF
FL5
FL4
FIL
SW
FIL5
FIL4
Q30 XP1114
IF IC
IC8 TA31136
SCAD
Q31 XP4311
SCOPE
CTRL
PFL4
Q41
2SK882
NB
AMP
AGC
CTRL
Q37 2SC4211
Q38 XP4311
GATE
CTRL
Q40
2SC4211
NB
GATE
SW
D53
1SS375
NB
DET
Q36
DTC144EU
NB-SW
NB
B0
B1
B2
B3
B4
B5
B6
B7
WFM5
FM5
FIL0
FIL1
FIL2
FIL3
Q4,Q5,Q6,Q7
XP1114
BUFF
IC1 BU4094
DRIVER
Q65,Q67,Q68
XP1114
BUFF
IC3 BU4094
DRIVER
AM5
SSB5
Q69 XP4311
/WF5
BUFF
IC13B NJM2904
AGC
AGC
AMP
Lo-f : 532.4 - 1066.65
LPF
LPF
HPF
Lo-f : 266.7 - 532.35 MHz
LOGIC UNIT
NB
AGCF
SCAN
ATTC
FL4
FL5
IC2
BU4094
DRIVER
RF UNIT
IC5 TA7805
+5
REG
RF+5
IC6 TA7808
+8
REG
IC11A M5223
ADJUST
CTRL
REFV
IC11B M5223
TUNE
CTRL
TUNV
+33
REG
IC7 BA6161
D3 1SS355
RF33
RF+8
-5
REG
IC8 μPC1555
D5 1SS272
D6 MA8051
RF-5
Q6, Q7
2SC4211
NOISE
AMP
IC9B M62429
ELECT
VR
NOIS
CMAD
2nd-Lo:
254.947301 - 257.0027 MHz
ATT
LPF
PFL4
SCOPE-Lo : 10.05 - 10.35 / 11.25 - 11.35 MHz
SCOPE-Lo
LPF
HPF
BFO : 447.3 – 452.7 kHz
BFO
LPF
HPF

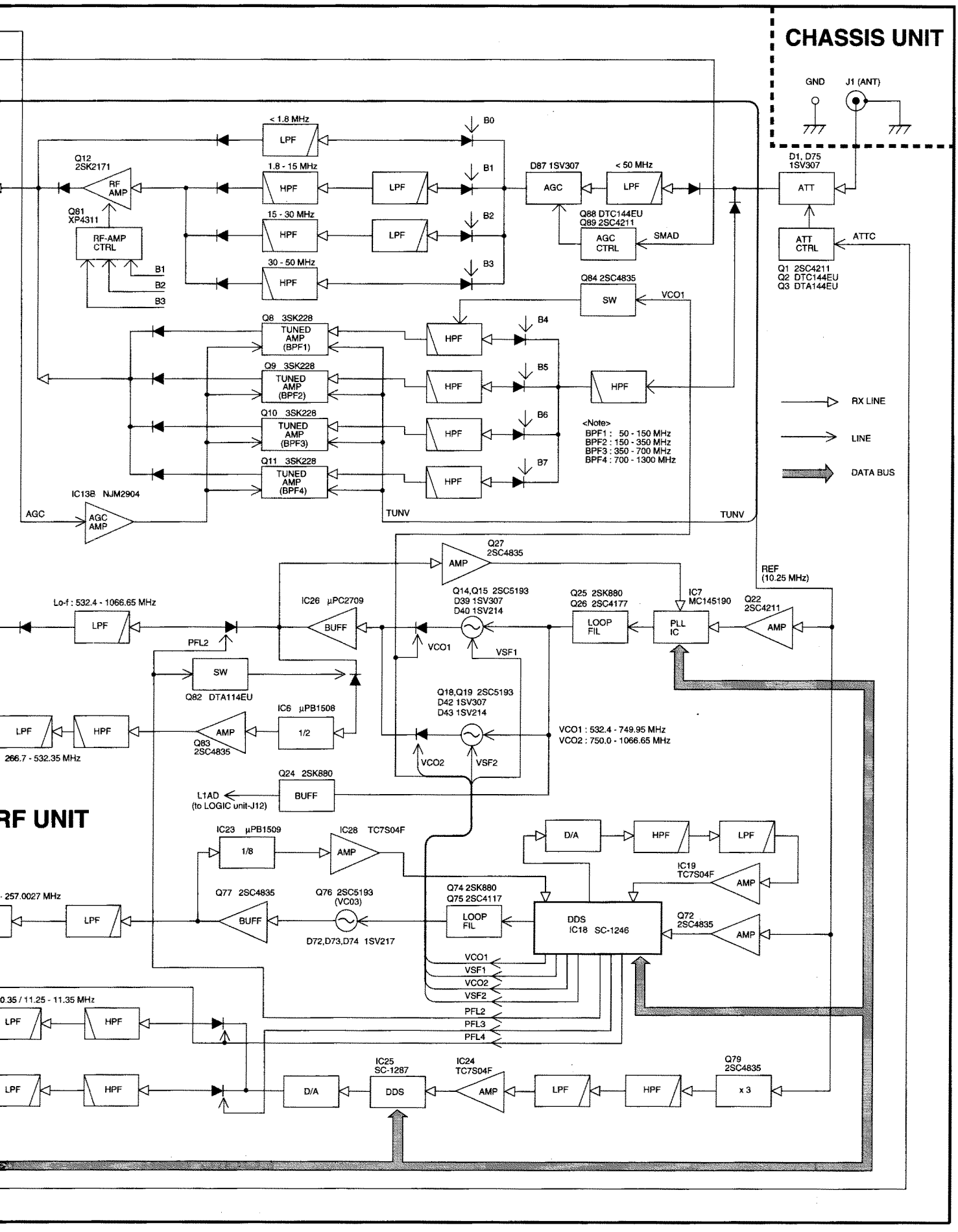
CHASSIS UNIT
GND
J1 (ANT)
< 1.8 MHz
LPF
B0
Q12
2SK2171
RF
AMP
1.8 - 15 MHz
HPF
LPF
B1
D87 1SV307
AGC
< 50 MHz
LPF
D1, D75
1SV307
ATT
Q81
XP4311
RF-AMP
CTRL
15 - 30 MHz
HPF
LPF
B2
Q88 DTC144EU
Q89 2SC4211
AGC
CTRL
SMAD
ATT
CTRL
ATTC
B1
B2
B3
30 - 50 MHz
HPF
B3
Q1 2SC4211
Q2 DTC144EU
Q3 DTA144EU
Q84 2SC4835
SW
VCO1
Q8 3SK228
TUNED
AMP
(BPF1)
HPF
B4
Q9 3SK228
TUNED
AMP
(BPF2)
HPF
B5
HPF
Q10 3SK228
TUNED
AMP
(BPF3)
HPF
B6
Q11 3SK228
TUNED
AMP
(BPF4)
HPF
B7
<Note>
BPF1 : 50 - 150 MHz
BPF2 : 150 - 350 MHz
BPF3 : 350 - 700 MHz
BPF4 : 700 - 1300 MHz
RX LINE
LINE
DATA BUS
IC13B NJM2904
AGC
AGC
AMP
TUNV
TUNV
Q27
2SC4835
AMP
REF
(10.25 MHz)
Lo-f : 532.4 - 1066.65 MHz
LPF
IC26 μPC2709
BUFF
Q14,Q15 2SC5193
D39 1SV307
D40 1SV214
Q25 2SK880
Q26 2SC4177
LOOP
FIL
IC7
MC145190
PLL
IC
Q22
2SC4211
AMP
PFL2
VCO1
VSF1
SW
Q82 DTA114EU
Q18,Q19 2SC5193
D42 1SV307
D43 1SV214
IC6 μPB1508
LPF
HPF
AMP
Q83
2SC4835
1/2
266.7 - 532.35 MHz
VCO1 : 532.4 - 749.95 MHz
VCO2 : 750.0 - 1066.65 MHz
VCO2
VSF2
Q24 2SK880
BUFF
L1AD
(to LOGIC unit-J12)
RF UNIT
IC23 μPB1509
1/8
IC28 TC7S04F
AMP
D/A
HPF
LPF
IC19
TC7S04F
AMP
257.0027 MHz
LPF
Q77 2SC4835
BUFF
Q76 2SC5193
(VC03)
D72,D73,D74 1SV217
Q74 2SK880
Q75 2SC4117
LOOP
FIL
DDS
IC18 SC-1246
Q72
2SC4835
AMP
VCO1
VSF1
VCO2
VSF2
PFL2
PFL3
PFL4
0.35 / 11.25 - 11.35 MHz
LPF
HPF
LPF
HPF
D/A
IC25
SC-1287
DDS
IC24
TC7S04F
AMP
LPF
HPF
Q79
2SC4835
x 3

SECTION 11 VOLTAGE DIAGRAM

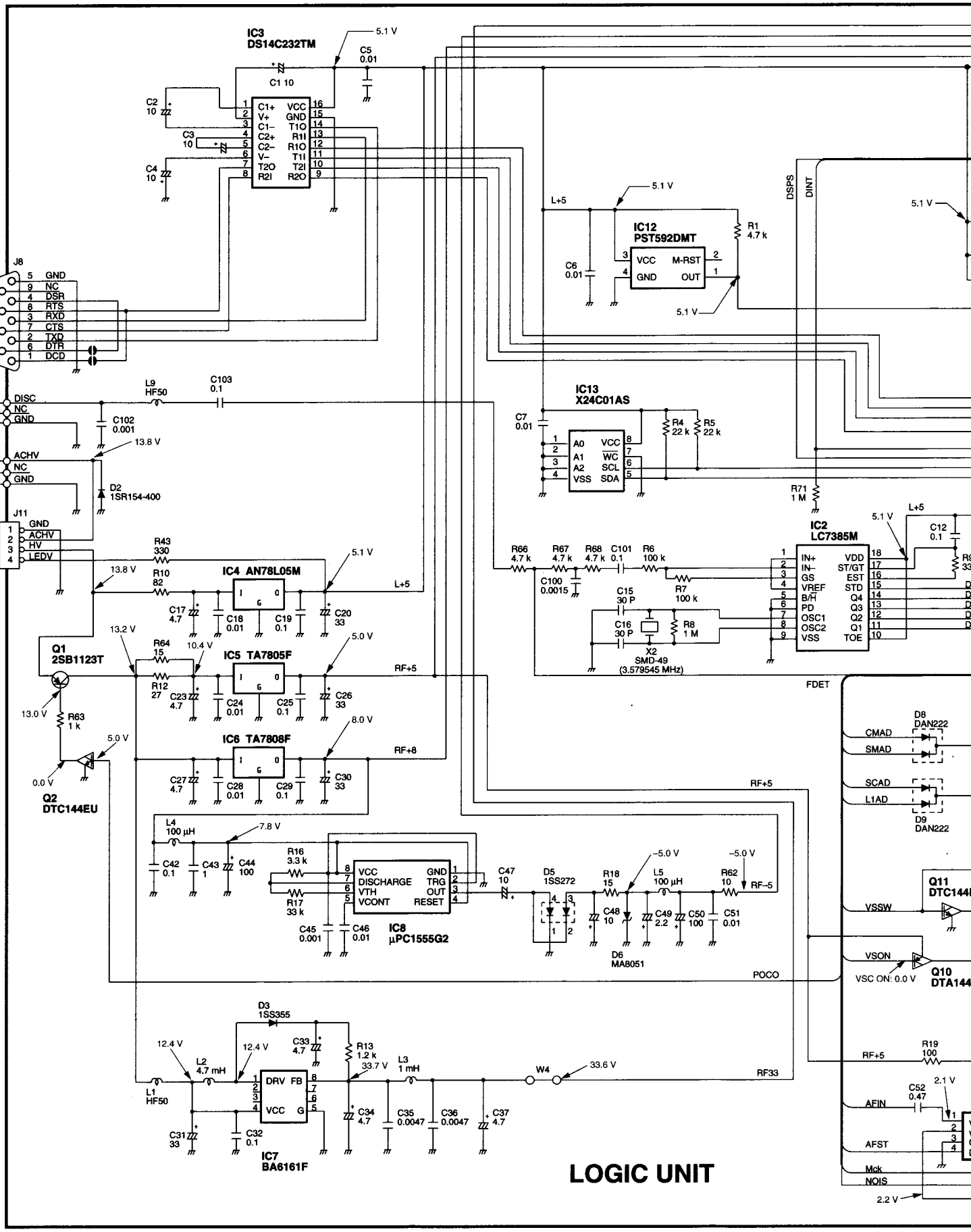

LOGIC UNIT

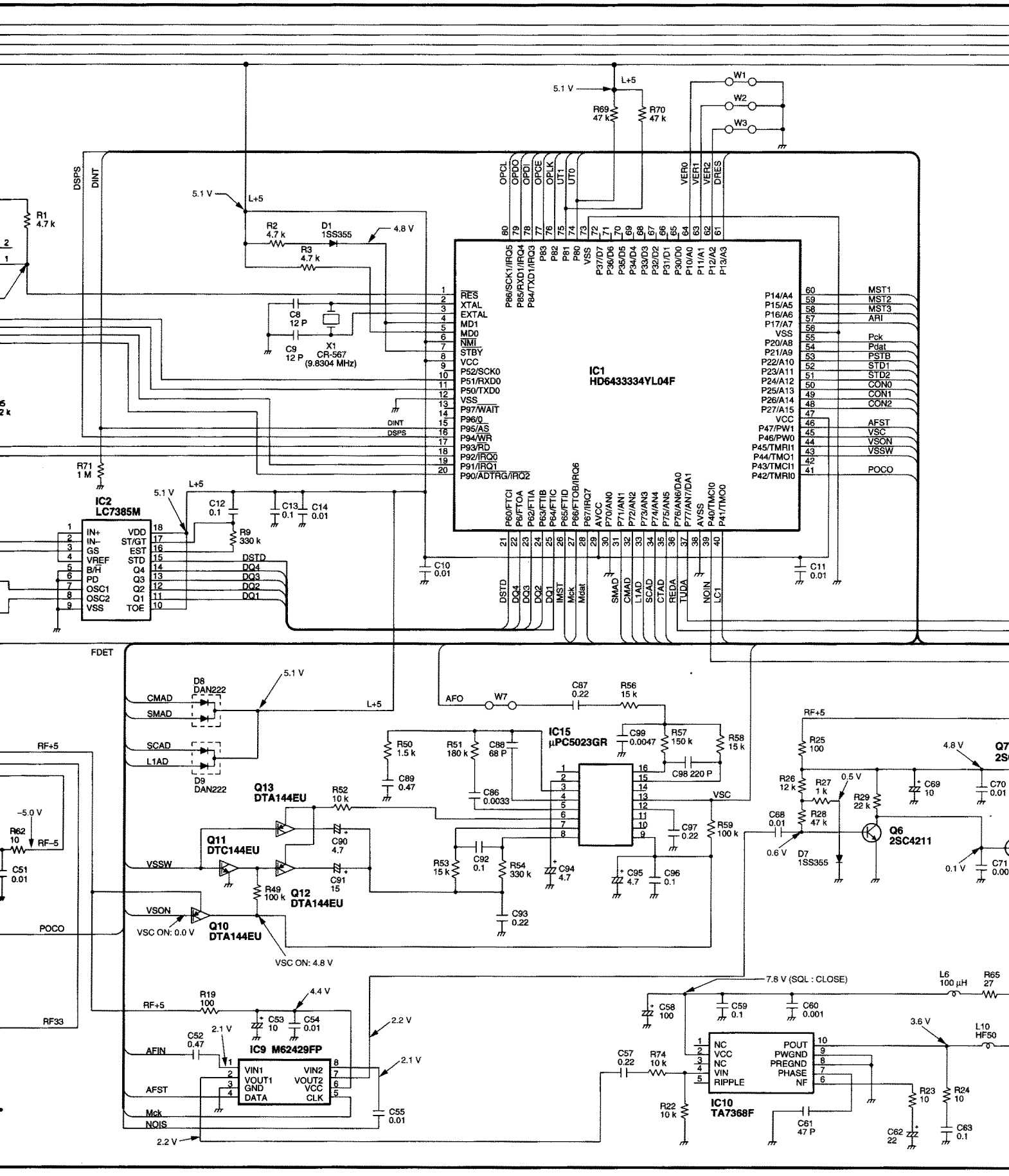
IC1
HD6433334YL04F
IC2
LC7385M
IC15
μPC5023GR
IC9 M62429FP
IC10
TA7368F
Q10
DTA144EU
Q11
DTC144EU
Q12
DTA144EU
Q13
DTA144EU
Q6
2SC4211
X1
CR-567
(9.8304 MHz)
L+5
5.1 V
4.8 V
4.4 V
2.2 V
2.1 V
0.5 V
0.6 V
0.1 V
-5.0 V
RF+5
RF-5
RF33
POCO
FDET
DSPS
DINT
VSC ON: 0.0 V
VSC ON: 4.8 V
7.8 V (SQL : CLOSE)
3.6 V
MST1
MST2
MST3
ARI
Pck
Pdat
PSTB
STD1
STD2
CON0
CON1
CON2
AFST
VSC
VSON
VSSW
DSTD
DQ4
DQ3
DQ2
DQ1
CMAD
SMAD
SCAD
L1AD
AFO
AFIN
Mck
NOIS
VSSW
VSON
R1 4.7 k
R2 4.7 k
R3 4.7 k
D1 1SS355
C8 12 P
C9 12 P
R69 47 k
R70 47 k
R71 1 M
R9 330 k
C12 0.1
C13 0.1
C14 0.01
C10 0.01
C11 0.01
D8 DAN222
D9 DAN222
R62 10
C51 0.01
R19 100
C52 0.47
C53 10
C54 0.01
C55 0.01
R50 1.5 k
R51 180 k
C88 68 P
C89 0.47
C86 0.0033
C87 0.22
R56 15 k
C99 0.0047
R57 150 k
R58 15 k
C98 220 P
R52 10 k
C90 4.7
C91 15
R49 100 k
R53 15 k
C92 0.1
R54 330 k
C93 0.22
C94 4.7
C95 4.7
C96 0.1
C97 0.22
R59 100 k
R25 100
R26 12 k
R27 1 k
R28 47 k
R29 22 k
C68 0.01
D7 1SS355
C69 10
C70 0.01
C71 0.00
C58 100
C59 0.1
C60 0.001
L6 100 μH
R65 27
L10 HF50
C57 0.22
R74 10 k
R22 10 k
C61 47 P
R23 10
R24 10
C62 22
C63 0.1

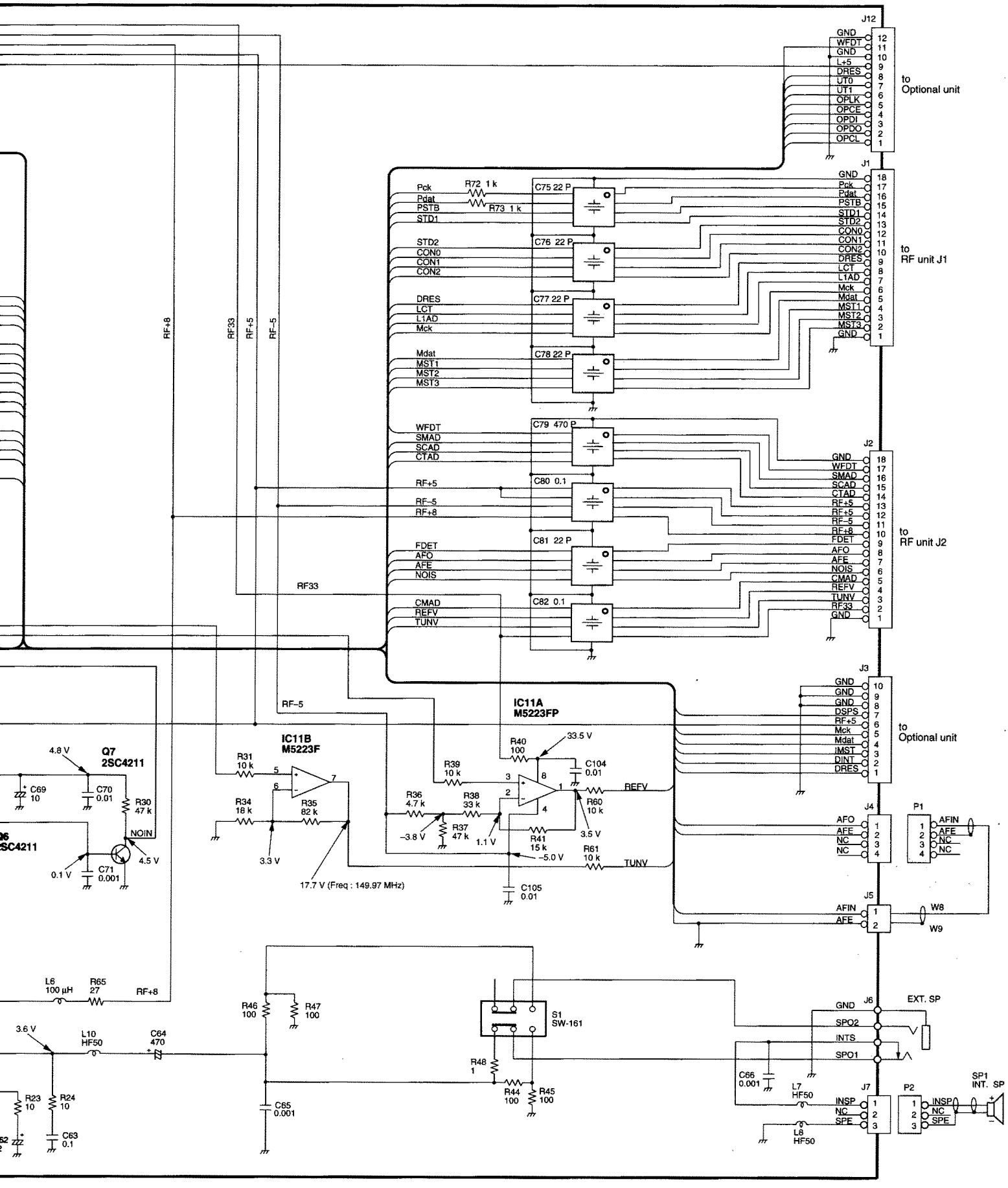
J12
GND
WFDT
GND
L+5
DRES
UT0
UT1
OPLK
OPCE
OPDI
OPDO
OPCL
to Optional unit
J1
GND
Pck
Pdat
PSTB
STD1
STD2
CON0
CON1
CON2
DRES
LCT
L1AD
Mck
Mdat
MST1
MST2
MST3
GND
to RF unit J1
R72 1 k
R73 1 k
C75 22 P
C76 22 P
C77 22 P
C78 22 P
C79 470 P
C80 0.1
C81 22 P
C82 0.1
J2
GND
WFDT
SMAD
SCAD
CTAD
RF+5
RF+5
RF−5
RF+8
FDET
AFO
AFE
NOIS
CMAD
REFV
TUNV
RF33
GND
to RF unit J2
RF+8
RF33
RF+5
RF−5
RF−5
RF33
IC11A
M5223FP
IC11B
M5223F
Q7
2SC4211
4.8 V
C69 10
C70 0.01
R30 47 k
NOIN
4.5 V
0.1 V
C71 0.001
R31 10 k
R34 18 k
R35 82 k
3.3 V
17.7 V (Freq : 149.97 MHz)
R39 10 k
R40 100
33.5 V
C104 0.01
R36 4.7 k
R38 33 k
R37 47 k
−3.8 V
1.1 V
R41 15 k
−5.0 V
R60 10 k
3.5 V
R61 10 k
C105 0.01
REFV
TUNV
J3
GND
GND
GND
DSPS
RF+5
Mck
Mdat
IMST
DINT
DRES
to Optional unit
J4
AFO
AFE
NC
NC
P1
AFIN
AFE
NC
NC
J5
AFIN
AFE
W8
W9
L6 100 μH
R65 27
RF+8
3.6 V
L10 HF50
C64 470
R46 100
R47 100
S1 SW-161
R48 1
R44 100
R45 100
C65 0.001
R23 10
R24 10
C63 0.1
J6
GND
SPO2
INTS
SPO1
EXT. SP
C66 0.001
L7 HF50
L8 HF50
J7
INSP
NC
SPE
P2
INSP
NC
SPE
SP1
INT. SP

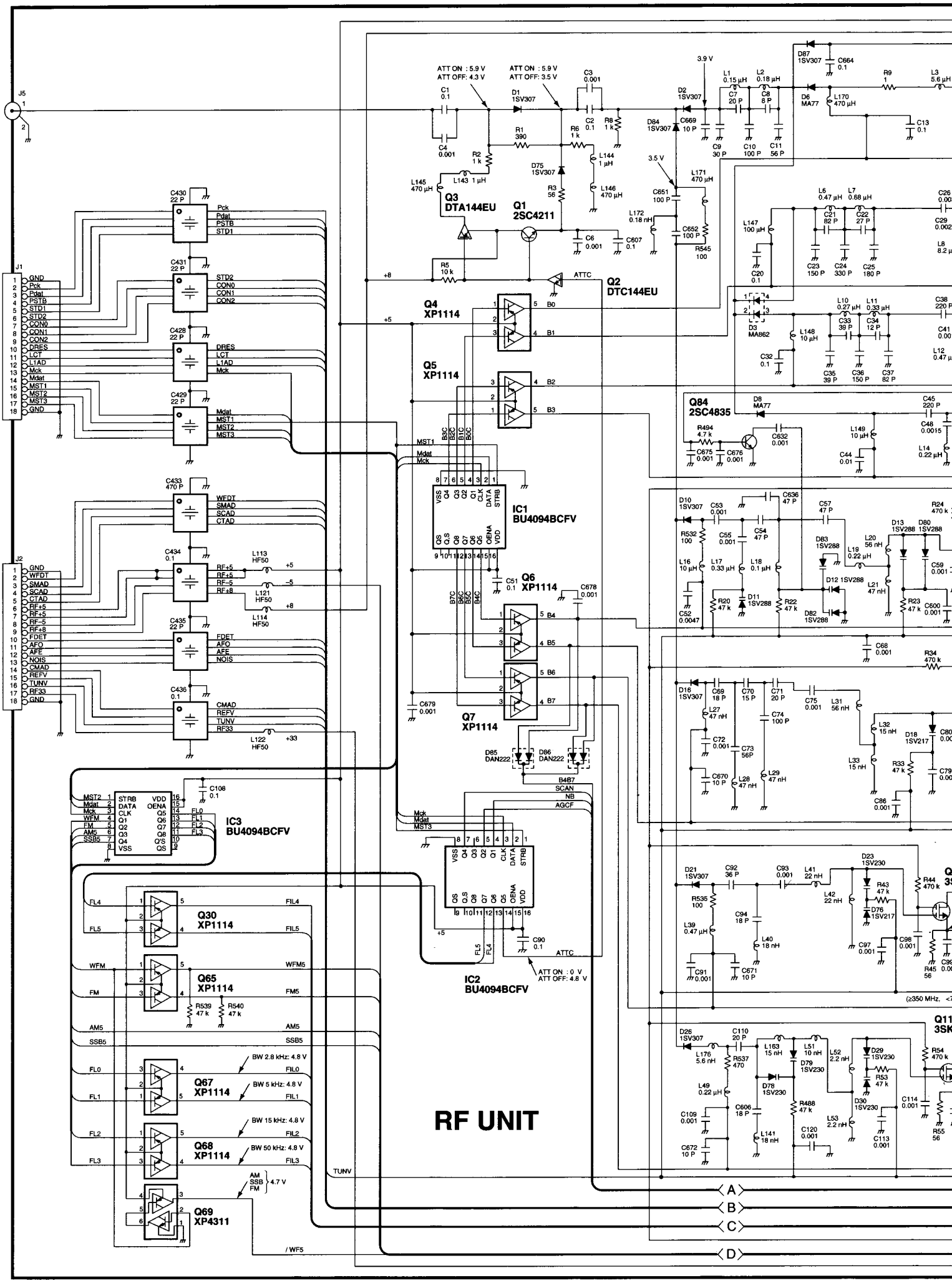
RF UNIT
Q1 2SC4211
Q2 DTC144EU
Q3 DTA144EU
Q4 XP1114
Q5 XP1114
Q6 XP1114
Q7 XP1114
Q84 2SC4835
IC1 BU4094BCFV
IC2 BU4094BCFV
IC3 BU4094BCFV
Q30 XP1114
Q65 XP1114
Q67 XP1114
Q68 XP1114
Q69 XP4311
to LOGIC unit J1
to LOGIC unit J2
ATT ON : 5.9 V
ATT OFF: 4.3 V
ATT ON : 5.9 V
ATT OFF: 3.5 V
ATT ON : 0 V
ATT OFF: 4.8 V
BW 2.8 kHz: 4.8 V
BW 5 kHz: 4.8 V
BW 15 kHz: 4.8 V
BW 50 kHz: 4.8 V
AM SSB FM 4.7 V

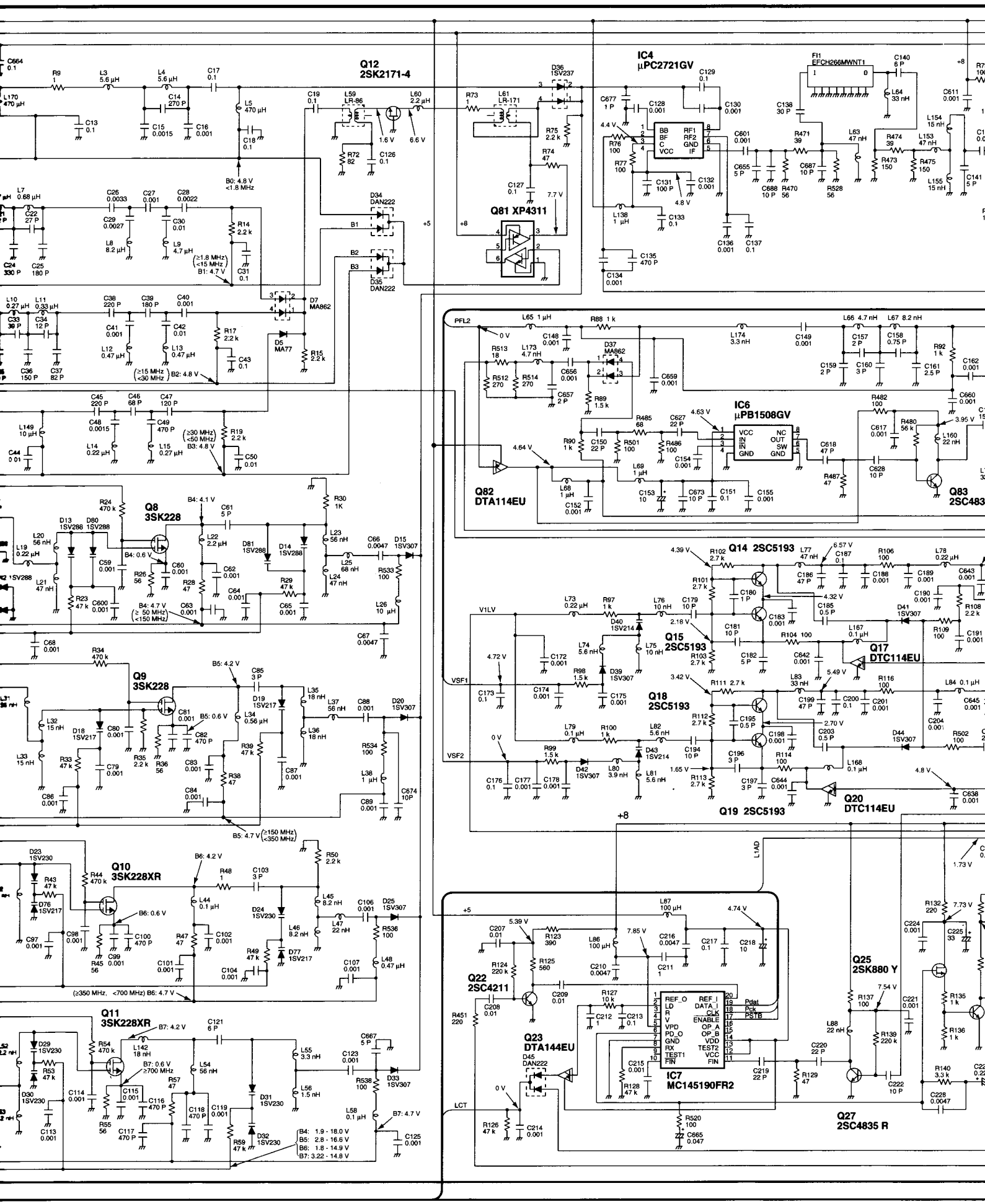
Q12
2SK2171-4
IC4
μPC2721GV
Q81 XP4311
Q8
3SK228
Q9
3SK228
Q10
3SK228XR
Q11
3SK228XR
IC6
μPB1508GV
Q82
DTA114EU
Q83
2SC483
Q14 2SC5193
Q15
2SC5193
Q17
DTC114EU
Q18
2SC5193
Q19 2SC5193
Q20
DTC114EU
Q22
2SC4211
Q23
DTA144EU
IC7
MC145190FR2
Q25
2SK880 Y
Q27
2SC4835 R

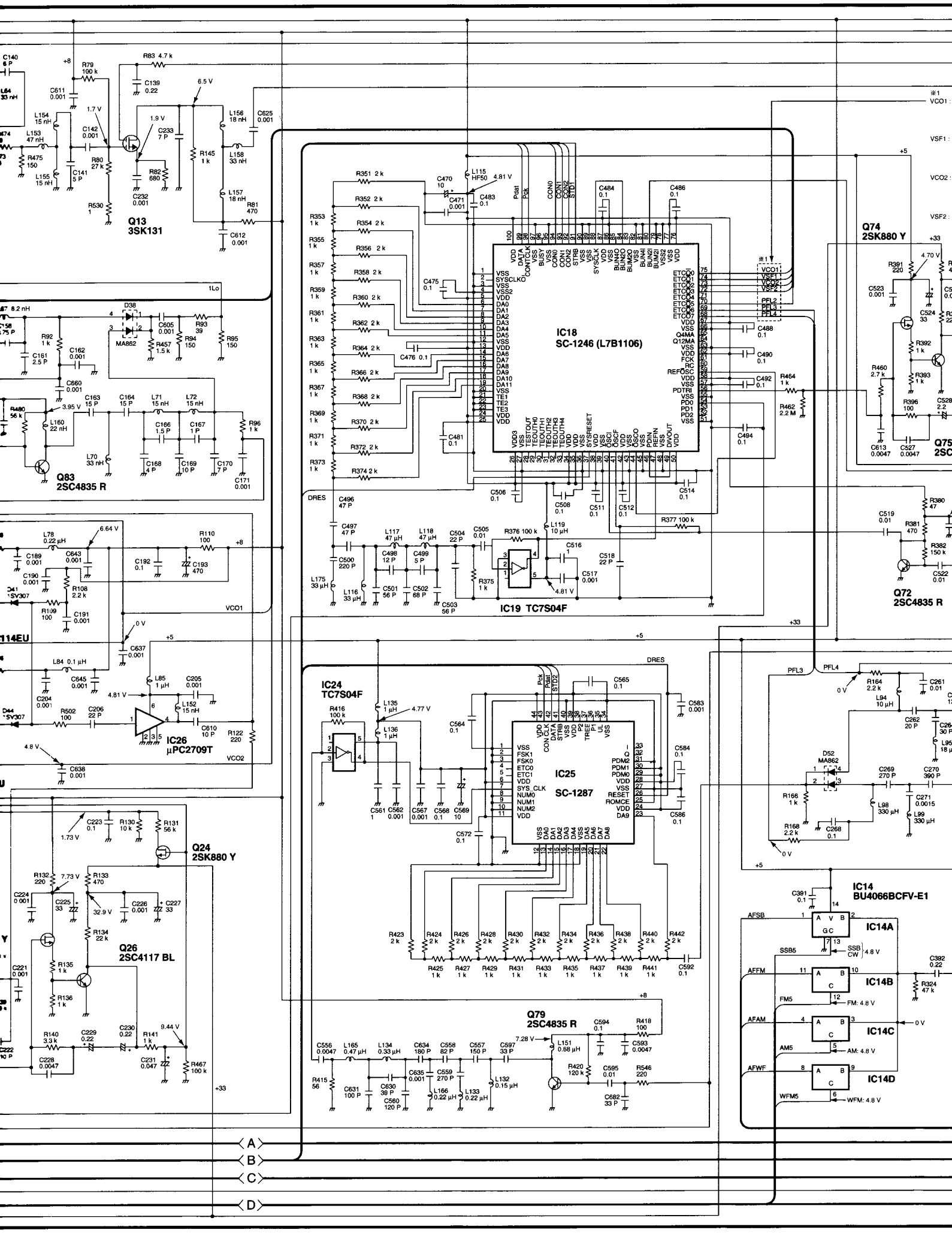
Q13
3SK131
Q83
2SC4835 R
IC18
SC-1246 (L7B1106)
IC19 TC7S04F
Q74
2SK880 Y
Q72
2SC4835 R
IC26
μPC2709T
IC24
TC7S04F
IC25
SC-1287
Q24
2SK880 Y
Q26
2SC4117 BL
Q79
2SC4835 R
IC14
BU4066BCFV-E1
IC14A
IC14B
IC14C
IC14D
A
B
C
D

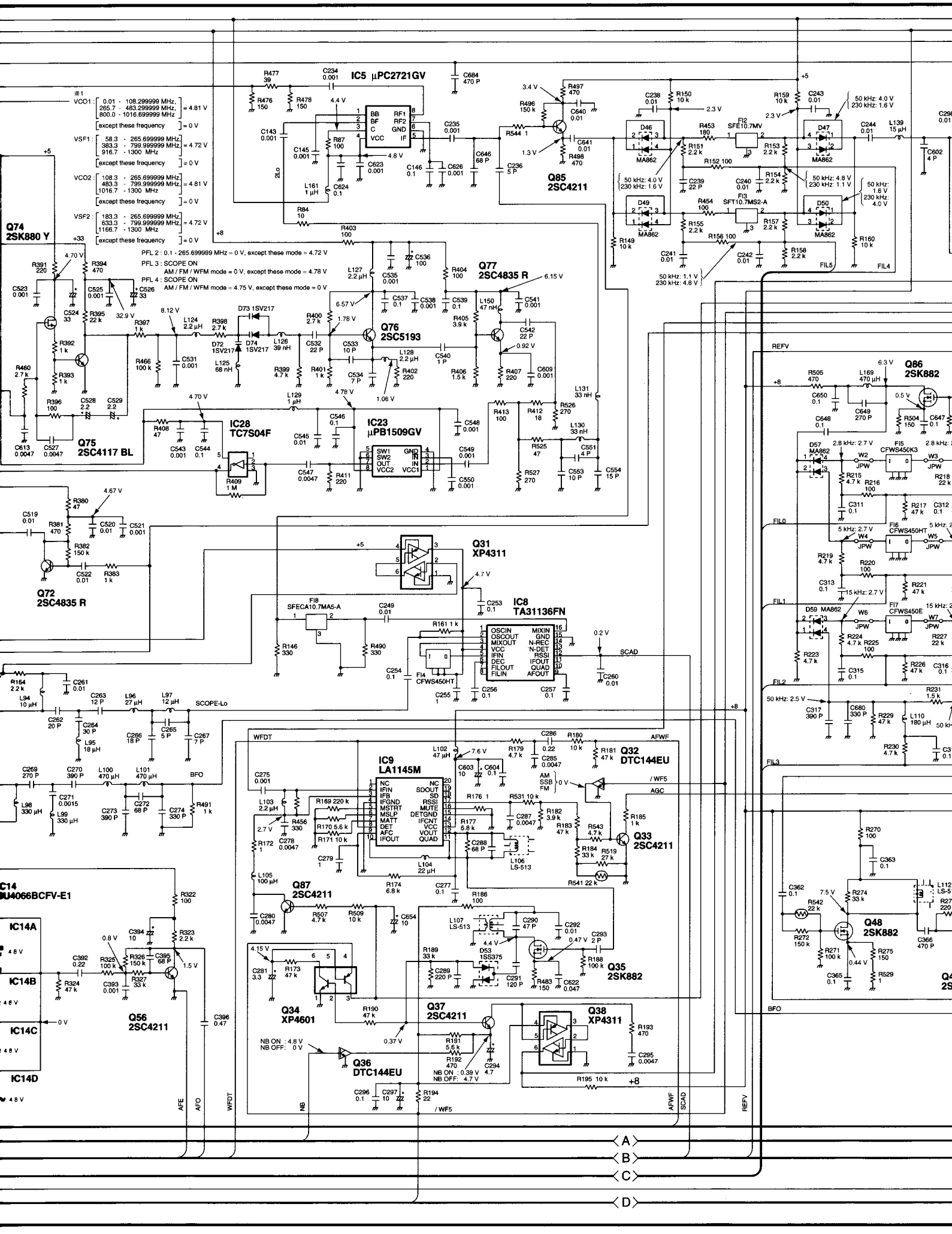
IC5 μPC2721GV
Q85 2SC4211
Q74 2SK880 Y
Q77 2SC4835 R
Q76 2SC5193
Q75 2SC4117 BL
IC28 TC7S04F
IC23 μPB1509GV
Q86 2SK882
Q31 XP4311
Q72 2SC4835 R
IC8 TA31136FN
IC9 LA1145M
Q32 DTC144EU
Q33 2SC4211
Q87 2SC4211
Q35 2SK882
Q34 XP4601
Q37 2SC4211
Q38 XP4311
Q36 DTC144EU
Q56 2SC4211
Q48 2SK882
IC14 BU4066BCFV-E1
IC14A
IC14B
IC14C
IC14D
VCO1 : 0.01 - 108.299999 MHz, 265.7 - 483.299999 MHz, 800.0 - 1016.699999 MHz = 4.81 V
except these frequency = 0 V
VSF1 : 58.3 - 265.699999 MHz, 383.3 - 799.999999 MHz, 916.7 - 1300 MHz = 4.72 V
except these frequency = 0 V
VCO2 : 108.3 - 265.699999 MHz, 483.3 - 799.999999 MHz, 1016.7 - 1300 MHz = 4.81 V
except these frequency = 0 V
VSF2 : 183.3 - 265.699999 MHz, 633.3 - 799.999999 MHz, 1166.7 - 1300 MHz = 4.72 V
except these frequency = 0 V
PFL 2 : 0.1 - 265.699999 MHz = 0 V, except these mode = 4.72 V
PFL 3 : SCOPE ON
AM / FM / WFM mode = 0 V, except these mode = 4.78 V
PFL 4 : SCOPE ON
AM / FM / WFM mode = 4.75 V, except these mode = 0 V
NB ON : 4.8 V
NB OFF: 0 V
NB ON : 0.39 V
NB OFF: 4.7 V
SCOPE-Lo
WFDT
AFWF
REFV
BFO
AGC
SCAD
AFE
AFO
NB
/ WF5
FIL0
FIL1
FIL2
FIL3
FIL4
FIL5
50 kHz: 4.0 V
230 kHz: 1.6 V
50 kHz: 4.8 V
230 kHz: 1.1 V
50 kHz: 1.1 V
230 kHz: 4.8 V
50 kHz: 2.5 V
2.8 kHz: 2.7 V
5 kHz: 2.7 V
15 kHz: 2.7 V
A
B
C
D

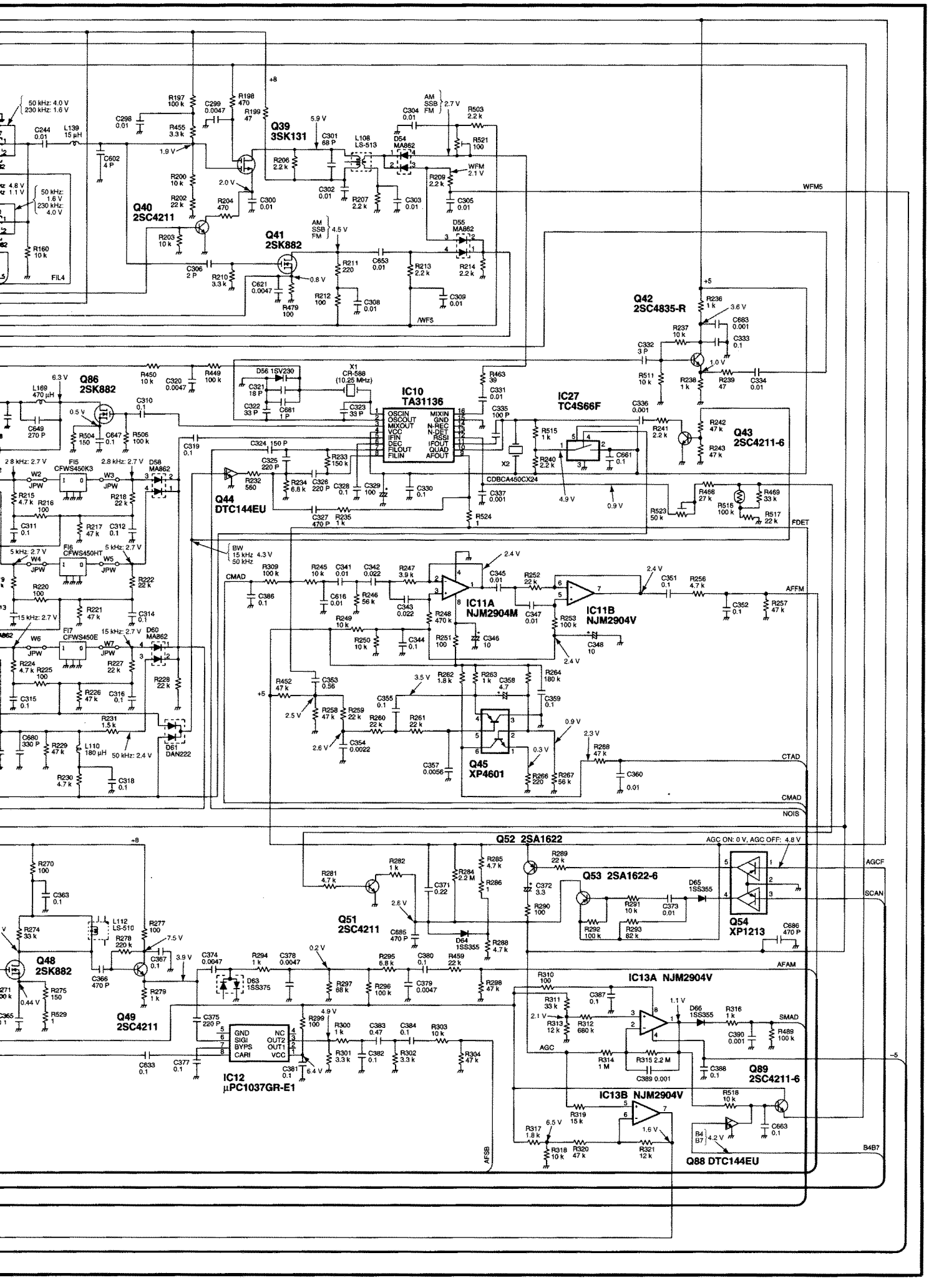
Q39
3SK131
Q40
2SC4211
Q41
2SK882
Q42
2SC4835-R
Q43
2SC4211-6
Q44
DTC144EU
Q45
XP4601
Q48
2SK882
Q49
2SC4211
Q51
2SC4211
Q52 2SA1622
Q53 2SA1622-6
Q54
XP1213
Q86
2SK882
Q88 DTC144EU
Q89
2SC4211-6
IC10
TA31136
IC11A
NJM2904M
IC11B
NJM2904V
IC12
μPC1037GR-E1
IC13A NJM2904V
IC13B NJM2904V
IC27
TC4S66F
X1
CR-588
(10.25 MHz)
X2
CDBCA450CX24
WFM5
/WFS
FDET
AFFM
CTAD
CMAD
NOIS
AGCF
SCAN
AFAM
SMAD
AGC
AFSB
B4B7

Icom Inc.

6-9-16, Kamihigashi, Hirano-ku, Osaka 547-0002, Japan
Phone : 06 6793 5302
Fax : 06 6793 0013

Icom America Inc.

<Corporate Headquarters>
2380 116th Avenue N.E., Bellevue, WA 98004, U.S.A.
Phone : (425) 454-8155 Fax : (425) 454-1509
URL : http://www.icomamerica.com
<Customer Service>
Phone : (425) 454-7619

Icom Canada

3071 #5 Road, Unit 9, Richmond, B.C., V6X 2T4, Canada
Phone : (604) 273-7400 Fax : (604) 273-1900
URL : http://www.icomcanada.com

Icom (Australia) Pty. Ltd.

A.C.N. 006 092 575
290-294 Albert Street, Brunswick, Victoria, 3056, Australia
Phone : 03 9387 0666 Fax : 03 9387 0022
URL : http://www.icom.net.au

Asia Icom Inc.

6F No. 68, Sec. 1 Cheng-Teh Road, Taipei, Taiwan, R.O.C.
Phone : (02) 2559 1899 Fax : (02) 2559 1874

Icom (Europe) GmbH

Communication Equipment
Himmelgeister Str. 100, D-40225 Düsseldorf, Germany
Phone : 0211 346047 Fax : 0211 333639
URL : http://www.icomeurope.com

Icom Spain S.L.

Crta. de Gracia a Manresa Km. 14,750
08190 Sant Cugat del Valles Barcelona, SPAIN
Phone : (93) 590 26 70 Fax : (93) 589 04 46
URL : http://www.icomspain.com

Icom (UK) Ltd.

Unit 9, Sea St., Herne Bay, Kent, CT6 8LD, U.K.
Phone : 01227 741741 Fax : 01227 741742
URL : http://www.icomuk.co.uk

Icom France S a

Zac de la Plaine, Rue Brindejonc des Moulinais
BP 5804, 31505 Toulouse Cedex, France
Phone : 561 36 03 03 Fax : 561 36 03 00
URL : http://www.icom-france.com

Count on us!

Icom Inc.
6-9-16, Kamihigashi, Hirano-ku, Osaka 547-0002, Japan

A-5456MH-S-②
Printed in Japan
© 1997 Icom Inc.