INSTRUCTION MANUAL

FOR

TYPE WJ-8610 SERIES RECEIVER

7

WATKINS-JOHNSON

INSTRUCTION MANUAL

FOR

TYPE WJ-8610 SERIES RECEIVER

The TYPE WJ-8610 SERIES RECEIVER manual covers the WJ-8616A and WJ-8617A receivers. Differences between the receivers are described in the WJ-8610 Series Receiver Configurations Table (Table 1-0) and the WJ-8610 Series Receiver, Specifications (Table 1-1). Descriptions of the documented options are provided in the separate Appendix manual.

WATKINS-JOHNSON COMPANY
700 QUINCE ORCHARD ROAD
GAITHERSBURG, MARYLAND 20760

GJS 8/81

WARNING

This equipment employs voltages which are dangerous and may be fatal if contacted. Extreme caution should be exercised in working with the equipment with any of the protective covers removed.

PROPRIETARY STATEMENT

This document and subject matter disclosed herein are proprietary items to which Watkins-Johnson Company retains the exclusive right of dissemination, reproduction, manufacture and sale.

This document is provided to the individual or using organization for their use alone in the direct support of the associated equipment unless permission for further disclosure is expressly granted in writing.

ADDENDA

The following operating changes apply to all WJ-8610A Series and WJ-8618A Receivers containing 1.6.1 version software. This software is installed in and affects the operation of WJ-8616A Receivers, serial no. 16 and above, WJ-8617A Receivers, serial no. 57 and above, and WJ-8618A Receivers, serial no. 56 and above.

Paragraph	
2.4.1.1	Push ON/OFF Power - When the Power ON/OFF pushbutton is placed in the ON position, a delay of approximately 1/2 seconds will occur before the front panel illuminates.
2.4.2.3	SCAN Mode - The width of each SCAN band is limited to 64000 frequency increments for each band. The maximum frequency coverage of each band is equal to the SCAN INCREMENT (see Table 2-3 of Section II) times 64000. Table 2-3 - The SCAN INCREMENT for the 10 KHz IF bandwidth has been changed from 10 KHz to 5 KHz.
2.4.2.3.3	LOCK-OUT Channel Recall and Deletion - In addition to LOCK-OUT Channel Recall and Deletion, the capability of setting the receiver to the frequency and bandwidth of the recalled LOCK-OUT Channel has been added. This is accomplished by recalling the LOCK-OUT Channel, as described in 2.4.2.3.3 and then depressing the EXC (Execute) push-button.
2.4.2.6	CURSOR - The operation of the cursor mode has been modified, as follows: A) Selection of the Cursor mode and activating a Cursor Scan no longer require two seperate steps. Depressing the Cursor (Scan) push-button one time, after selecting the upper case function, selects the Cursor mode and Activates the Cursor Scan. B) When in the cursor mode, the Signal Monitor can be restored to its standard operation by depressing the MAN pushbutton.

2.4.2.7 ERROR CODES - The three-digit error codes, 501 and 502, have been changed to codes 551 and 552, respectively.

Error Code 812 has been added. This code will be displayed if a SCAN is initiated when the width of the Scan band requires more than 64000 incremental steps. If this code is displayed, either the width of the frequency spectrum to be scanned must be decreased, or the programmed IF bandwidth must be increased to increase the size of the SCAN increments.

TABLE OF CONTENTS

SECTION I

GENERAL DESCRIPTION

Paragraph		Page
1.1	Electrical Characteristics	1-1
1.2	Mechanical Characteristics	1-1
1.3	Equipment Supplied	1-2
1.4	Equipment Required But Not Supplied	1-2

SECTION II

INSTALLATION AND OPERATION

2.1	Unpacking and Inspection	2-1
2.2	Installation	2-1
2.2.1	Connector Signals	2-1
2.2.1.1	Line Cord Receptacle and Voltage Selector Fuse Block	2-1
2.2.1.2	Antenna #1 Input ANT 1	2-2
2.2.1.3	Antenna #2 Input ANT 2	2-2
2.2.1.4	SW IF Out J1	2-2
2.2.1.5	FM MON J2	2-2
2.2.1.6	Audio J3	2-2
2.2.1.7	SW Video Out J4	2-2
2.2.1.8	Scan Out J5	2-2
2.2.1.9	X Out J6	2-2
2.2.1.10	Y Out J7	2-2
2.2.1.11	1 MHz Ref J8	2-3
2.2.1.12	WB IF Out J20	2-3
2.2.1.13	COR J21	2-3
2.2.1.14	Remote Control J22	2-3
2.2.1.15	Phones A7J1	2-3
2.2.1.16	Optional Tuning A6J1	2-3
2.3	Equipment Malfunctions	2-3
2.4	Operation	2-3
2.4.1	Controls And Indicators	2-3
2.4.1.1	Push ON/OFF Power	2-3
2.4.1.2	Detect Mode	2-3
2.4.1.3	Bandwidth	2-5
2.4.1.4	AFC	2-5
2.4.1.5	AGC	2-6
2.4.1.6	COR Level	2-6

TABLE OF CONTENTS (Cont'd)

SECTION II (Cont'd)

INSTALLATION AND OPERATION

Paragraph		Page
2.4.1.7	Memory Select	2-6
2.4.1.8	BFO	2-6
2.4.1.9	Tuning Rate	2-6
2.4.1.10	Tuning Knob	2-6
2.4.1.11	Disable	2-6
2.4.1.12	ANT 2	2-6
2.4.1.13	STO	2-7
2.4.1.14	MAN	2-7
2.4.1.15	REM	2-7
2.4.1.16	RCL	2-7
2.4.1.17	EXC	2-7
2.4.1.18	CLR	2-7
2.4.1.19	Scan	2-7
2.4.1.20	Step	2-8
2.4.1.21	Dwell	2-8
2.4.1.22	Audio Gain	2-8
2.4.1.23	Line Audio	2-8
2.4.1.24	RF/IF Gain	2-8
2.4.1.25	Intensity	2-8
2.4.1.26	Focus	2-8
2.4.1.27	Sweep Rate	2-8
2.4.1.28	Sweep Width	2-8
2.4.1.29	Center Freq	2-8
2.4.1.30	Gain	2-8
2.4.1.31	Marker	2-8
2.4.1.32	LIN/LOG	2-8
2.4.1.33	Digital Display	2-8
2.4.2	Local Operation	2-9
2.4.2.1	Manual Control	2-9
2.4.2.2	Memory Programming	2-9
2.4.2.3	Scan Mode	2-10
2.4.2.3.1	Scan Continue	2-13
2.4.2.3.2	Scan Lock-out	2-14
2.4.2.3.3	Lock-Out Channel Recall and Deletion	2-15
2.4.2.4	Step Mode	2-15
2.4.2.4.1	Step Continue	2-17
2.4.2.5	Master Slave Operation	2-18
2.4.2.6	Cursor	2-19
2.4.2.7	Error Codes	2-20
2.5	Preparation For Reshipment	2-21

TABLE OF CONTENTS (Cont'd)

SECTION III

REPLACEMENT PARTS LIST

Paragraph		Page
3.1	Unit Numbering Method	3-1
3.2	Reference Designation Prefix	3-1
3.3	List of Manufacturers	3-1
3.4	Parts List	3-5
3.5	Type WJ-8610 Series Receiver, Main Chassis	3-6
3.5.1	Type 764005 Power Distribution (A1)	3-10
3.5.2	Type 794103 Signal Monitor (A2)	3-11
3.5.2.1	Type 724005 IF Amplifier (A2A1)	3-12
3.5.2.1.1	Part 18106-1 Input Amplifier (A2A1A1)	3-13
3.5.2.1.2	Part 18107-1 8.0 kHz IF Amplifier (A2A1A2)	3-15
3.5.2.1.3	Part 15801-3 Output Amplifier (A2A1A3)	3-16
3.5.2.2	Type 824002 Control Board (A2A2)	3-19
3.5.2.3	Type 774007 Oscillator Assembly (A2A3)	3-21
3.5.2.3.1	Part 15799-3 Sweep Oscillator Assembly (A2A3A1)	3-22
3.5.2.3.2	Part 270521 Ref Marker Assembly (A2A3A2)	3-23
3.5.2.4	Type 794099 Focus and Intensity Control (A2A4)	3-24
3.5.2.5	Type 764006 DC/DC Converter (A2A5)	3-25
3.5.2.5.1	Part 16533 DC/DC Converter (A2A5A1)	3-26
3.5.3	Type 794084 RF/IF Motherboard (A3)	3-27
3.5.3.1	Type 794094-1 VHF High Band Preselector (A3A3)	3-30
3.5.3.2	Type 794095-1 VHF Low Band Preselector (A3A4)	3-34
3.5.3.3	Type 794097-1 Preamplifier (A3A5)	3-38
3.5.3.3.1	Type 370285 500 MHz LP Filter (A3A5A1)	3-40
3.5.3.4	Type 794096-1 1st Converter (A3A6)	3-41
3.5.3.4.1	Type 370284 1st Converter Chassis (A3A6A1)	3-42
3.5.3.5	Type 714006-1 2nd Converter (A3A7)	3-44
3.5.3.5.1	Type 370396 LO Amplifier Assembly (A3A7A1)	3-47
3.5.3.5.1.1	Part 270082 LO Amplifier Board (A3A7A1A1)	3-48
3.5.3.6	Type 784001-1 AGC Amplifier (A3A8)	3-49
3.5.3.7	Type 724006-1 21.4 MHz IF Amplifier (10 kHz BW) (A3A9 thru A3A12)	3-52
3.5.3.8	Type 724006-2 21.4 MHz IF Amplifier (20 kHz BW) (A3A9 thru A3A12)	3-43
3.5.3.9	Type 724006-3 21.4 MHz IF Amplifier (50 kHz BW) (A3A9 thru A3A12)	3-54
3.5.3.10	Type 724006-4 21.4 MHz IF Amplifier (100 kHz BW) (A3A9 thru A3A12)	3-55
3.5.3.11	Type 724006-5 21.4 MHz IF Amplifier (250 kHz BW) (A3A9 thru A3A12)	3-56
3.5.3.12	Type 724006-6 21.4 MHz IF Amplifier (300 kHz BW) (A3A9 thru A3A12)	3-57

TABLE OF CONTENTS (Cont'd)

SECTION III (Cont'd)

REPLACEMENT PARTS LIST

Paragraph		Page
3.5.3.13	Type 724012-1 21.4 MHz IF Amplifier (500 kHz BW) (A3A9 thru A3A12)	3-58
3.5.3.14	Type 724007-1 21.4 MHz IF Amplifier (1 MHz BW) (A3A9 thru A3A12)	3-60
3.5.3.15	Type 724007-2 21.4 MHz IF Amplifier (2 MHz BW) (A3A9 thru A3A12)	3-62
3.5.3.16	Type 724008-1 21.4 MHz IF Amplifier (4 MHz BW) (A3A9 thru A3A12)	3-64
3.5.3.17	Type 794112-1 Video/Audio/COR (A3A13)	3-65
3.5.3.18	Type 724009-1 IF Output/AM Demodulator (A3A14)	3-68
3.5.3.19	Type 794106-1 FM Demodulator (10 kHz BW) (A3A15 thru A3A18)	3-73
3.5.3.20	Type 794106-2 FM Demodulator (20 kHz BW) (A3A15 thru A3A18)	3-75
3.5.3.21	Type 794107-1 FM Demodulator (50 kHz BW) (A3A15 thru A3A18)	3-77
3.5.3.22	Type 794107-2 FM Demodulator (100 kHz BW) (A3A15 thru A3A18)	3-79
3.5.3.23	Type 794107-3 FM Demodulator (250 kHz BW) (A3A15 thru A3A18)	3-81
3.5.3.24	Type 794107-4 FM Demodulator (300 kHz BW) (A3A15 thru A3A18)	3-83
3.5.3.25	Type 794104-2 FM Demodulator (500 kHz BW) (A3A15 thru A3A18)	3-85
3.5.3.26	Type 794104-1 FM Demodulator (1 MHz BW) (A3A15 thru A3A18)	3-87
3.5.3.27	Type 794105-1 FM Demodulator (2 MHz BW) (A3A15 thru A3A18)	3-89
3.5.3.28	Type 794105-2 FM Demodulator (4 MHz BW (A3A15 thru A3A18)	3-91
3.5.4	Type 794082 Synthesizer Motherboard (A4)	3-93
3.5.4.1	Type 794098-1 Reference Generator (A4A1)	3-94
3.5.4.2	Type 774003-1 1st LO Synthesizer (A4A2)	3-96
3.5.4.2.1	Type 370280 Prescaler/LO Buffer/Amplifier (A4A2A1)	3-98
3.5.4.2.1.1	Part 370405 LO Buffer Amplifier Assembly (A4A2A1A1)	3-99
3.5.4.3	Type 774004-1 2nd LO Synthesizer (A4A3)	3-102
3.5.4.3.1	Type 370281 Oscillator/Mixer (A4A3A1)	3-105
3.5.4.3.1.1	Part 270347 VCO/Buffer (A4A3A1A1)	3-106
3.5.4.3.1.2	Part 270348 4.6-5.6 MHz Amplifier (A4A3A1A2)	3-108
3.5.4.4	Type 774005-1 3rd Synthesizer (A4A4)	3-109
3.5.4.4.1	Part 370282 3rd Synthesizer (A4A4A1)	3-112
3.5.4.4.1.1	Part 370324 3rd Synthesizer RF (A4A4A1A1)	3-113
3.5.4.5	Type 794179-1 BFO Assembly (A4A5)	3-116
3.5.5	Type 794083 Digital Motherboard (A5)	3-117
3.5.5.1	Type 794108-1 Receiver Interface (A5A1)	3-118
3.5.5.2	Type 794110-1 Synthesizer Interface (A5A2)	3-120
3.5.5.3	Type 794109-1 Microprocessor (A5A3)	3-122
3.5.6	Type 794093-1 Front Panel Display and Control (A6)	3-124
3.5.7	Type 791275 Phone Jack Assembly (A7)	3-126
3.5.8	Type 794165-1 Antenna Input Filter Assembly (A8)	3-127
3.5.8.1	Part 270617 HP/LP Filter (A8A1)	3-128

TABLE OF CONTENTS (Cont'd)

SECTION IV

SCHEMATIC DIAGRAMS

LIST OF ILLUSTRATIONS

Figure		Page
2-1	WJ-8610 Series Receiver Outline Drawing	2-22
2-2	WJ-8610 Series VHF/UHF Receiver, Simplified Block Diagram	2-23
2-3	WJ-8610 Series, RF/IF Section, Functional Block Diagram (Part 1 of 2)	2-24
2-4	WJ-8610 Series, RF/IF Section, Functional Block Diagram (Part 2 of 2)	2-25
2-5	WJ-8610 Series, Synthesizer Section, Functional Block Diagram	2-26
2-6	WJ-8610 Series, Digital Control Section, Functional Block Diagram	2-27
2-7	WJ-8610 Series, Signal Monitor Section, Functional Block Diagram	2-28
4-1	Type 794103 Signal Monitor (A2), Schematic Diagram 470212	4-2
4-2	Type 724005 IF Amplifier (A2A1), Schematic Diagram 470156	4-3
4-3	Part 18106-1 Input Amplifier (A2A1A1), Schematic Diagram 42917	4-4
4-4	Part 18107-1 8.0 kHz IF Amplifier (A2A1A2), Schematic Diagram 34168	4-5
4-5	Part 15801-3 Output Amplifier (A2A1A3), Schematic Diagram 51097	4-6
4-6	Type 824002 Control Board (A2A2), Schematic Diagram 470227	4-7
4-7	Type 774007 Oscillator (A2A3), Schematic Diagram 370315	4-8
4-8	Part 15799-3 Sweep Oscillator (A2A3A1), Schematic Diagram 32369	4-9
4-9	Type 794099 Focus and Intensity Control (A2A4), Schematic Diagram 270343	4-10
4-10	Type 764006 DC-DC Converter (A2A5), Schematic Diagram 32874	4-11
4-11	Type 794084 RF/IF Motherboard (A3), Schematic Diagram 570079	4-12
4-12	Type 794094-1 VHF High Band Preselector (A3A3), Schematic Diagram 570057	4-13
4-13	Type 794095-1 VHF Low Band Preselector (A3A4), Schematic Diagram 570058	4-14
4-14	Type 794097-1 VHF Preamplifier (A3A5), Schematic Diagram 470140	4-15
4-15	Type 794096-1 1st Converter (A3A6), Schematic Diagram 470139	4-16
4-16	Type 714006 2nd Converter (A3A7), Schematic Diagram 570072	4-17
4-17	Type 784001-1 AGC Amplifier (A3A8), Schematic Diagram 570085	4-18
4-18	Type 724006 21.4 MHz IF Amplifier (10/20/50/100/250/300 kHz) (A3A9-A3A12), Schematic Diagram 370348	4-19
4-19	Type 724012 21.4 MHz IF Amplifier (500 kHz) (A3A9-A3A12) Schematic Diagram 370345	4-20
4-20	Type 724007-1, -2 21.4 MHz IF Amplifier (1 MHz, 2 MHz) (A3A9-A3A12), Schematic Diagram 470164	4-21

TABLE OF CONTENTS (Cont'd)

LIST OF ILLUSTRATIONS (Cont'd)

Figure		Page
4-21	Type 724008 21.4 MHz IF Amplifier (4 MHz) (A3A9-A3A12), Schematic Diagram 370349	4-22
4-22	Type 794112-1 Video/Audio/COR (A3A13), Schematic Diagram 470163	4-23
4-23	Type 724009-1 IF Output/AM Demodulator (A3A14), Schematic Diagram 570083	4-24
4-24	Type 794106 FM Demodulator (10 kHz, 20 kHz) (A3A15-A3A18), Schematic Diagram 370347	4-25
4-25	Type 794107 FM Demodulator (50/100/250/300 kHz) (A3A15-A3A18), Schematic Diagram 370346	4-26
4-26	Type 794104-1 FM Demodulator (500 kHz, 1 MHz) (A3A15-A3A18), Schematic Diagram 470157	4-27
4-27	Type 794105 FM Demodulator (2 MHz, 4 MHz) (A3A15-A3A18), Schematic Diagram 470158	4-28
4-28	Type 794082 Synthesizer Motherboard (A4), Schematic Diagram 570082	4-29
4-29	Type 794098-1 Reference Generator (A4A1), Schematic Diagram 570063	4-30
4-30	Type 774003-1 1st LO Synthesizer (A4A2), Schematic Diagram 570059	4-31
4-31	Type 774004-1 2nd LO Synthesizer (sheet 1 of 2) (A4A3), Schematic Diagram 570060	4-32
4-32	Type 7740041 2nd LO Synthesizer (sheet 2 of 2) (A4A3), Schematic Diagram 570060	4-33
4-33	Type 774005-1 3rd LO Synthesizer (sheet 1 of 2) (A4A4), Schematic Diagram 570064	4-34
4-34	Type 774005-1 3rd LO Synthesizer (sheet 2 of 2) (A4A4), Schematic Diagram 570064	4-35
4-35	Type 794179-1 BFO Assembly (A4A5), Schematic Diagram 370484	4-36
4-36	Type 794083 Digital I/O Motherboard (sheet 1 of 2) (A5), Schematic Diagram 570076	4-37
4-37	Type 794083 Digital I/O Motherboard (sheet 2 of 2) (A5), Schematic Diagram 570076	4-38
4-38	Type 794108-1 Receiver Interface (A5A1), Schematic Diagram 570075	4-39
4-39	Type 794110-1 Synthesizer Interface (A5A2), Schematic Diagram 570073	4-40
4-40	Type 794109-1 Microprocessor (A5A3), Schematic Diagram 570074	4-41
4-41	Type 794093-1, -2 Front Panel Display and Control (A6), Schematic Diagram 570070	4-42
4-42	Type 791275 Phone Jack Assembly (A7), Schematic Diagram 23519	4-43
4-43	Type 794165-1 Antenna Input Filter Assembly (A8) Schematic Diagram 270616	4-44
4-44	WJ-8610 Series Main Chassis and Power Distribution (A1), Schematic Diagram 670040	4-45

TABLE OF CONTENTS (Cont'd)

LIST OF TABLES

Table		Page
1-0	WJ-8610 Series Receiver Configuration	xi
1-1	Type WJ-8610 Series Receiver, Specifications	1-4
2-1	Table of Connectors	2-2
2-2	Table of Controls and Indicators	2-4
2-3	Table of Scan Increments	2-11

TABLE 1-0. WJ-8610 SERIES RECEIVER CONFIGURATIONS

Ref. Desig.	Description	Option Code	WJ-8616A	WJ-8617A	Type No.	Installed Assemblies
A1	Power Distribution	---	S	S	764005	_____
A2	Signal Monitor	---	S	S	794103	_____
A2A1	IF Amplifier	---	S	S	724005	_____
A2A2	Control	---	S	S	824002	_____
A2A3	Oscillator Assembly	---	S	S	774007	_____
A2A4	Focus & Intensity Control	---	S	S	794099	_____
A2A5	DC-DC Converter	---	S	S	764006	_____
A3	RF/IF Motherboard	---	S	S	794084	_____
A3A1	UHF Preselector	FE-2	O	S	794111-1	_____
A3A2	UHF Preamplifier/Mixer/LO	FE-2	O	S	794114-1	_____
A3A3	VHF High-Band Preselector	PRE	S	S	794094-1	_____
A3A4	VHF Low-Band Preselector	---	S	S	794095-1	_____
A3A5	Preamplifier	---	S	S	794097-1	_____
A3A6	1st Converter	---	S	S	794096-1	_____
A3A7	2nd Converter	---	S	S	714006	_____
A3A8	AGC Amplifier	---	S	S	784001-1	_____
A3A9	21.4 MHz IF Amplifier*					
	10 kHz Bandwidth				724006-1	_____
	20 kHz Bandwidth				724006-2	_____
	50 kHz Bandwidth				724006-3	_____
	100 kHz Bandwidth				724006-4	_____
Thru	250 kHz Bandwidth		Selection of Four		724006-5	_____
	300 kHz Bandwidth		Standard		724006-6	_____
	500 kHz Bandwidth				724012	_____
	1 MHz Bandwidth				724007-1	_____
	2 MHz Bandwidth				724007-2	_____
A3A12	4 MHz Bandwidth				724008-1	_____

* Unless otherwise specified, the receiver is provided with 20, 50, 300 kHz and 2 MHz bandwidths.

S - Standard Assembly
O - Optional

TABLE 1-0. WJ-8610 SERIES RECEIVER CONFIGURATIONS (Cont'd)

Ref. Desig.	Description	Option Code	WJ-8616A	WJ-8617A	Type No.	Installed Assemblies
A3A13	Video/Audio/COR	---	S	S	794112-1	_____
A3A14	IF Output/AM Demodulator	---	S	S	794009-1	
A3A15	21.4 MHz FM Demodulator*					
	10 kHz Bandwidth				794106-1	_____
	20 kHz Bandwidth				794106-2	_____
	50 kHz Bandwidth				794107-1	_____
	100 kHz Bandwidth				794107-2	_____
Thru	250 kHz Bandwidth		Selection of Four		794107-3	_____
	300 kHz Bandwidth		Standard		794107-4	_____
	500 kHz Bandwidth				794104-2	_____
	1 MHz Bandwidth				794104-1	_____
	2 MHz Bandwidth				794105-1	_____
A3A18	4 MHz Bandwidth				794105-2	_____
A4	Synthesizer Motherboard	---	S	S	794082	_____
A4A1	Reference Generator (10^{-6})	---	S	S	794098	_____
A4A1	Reference Generator (10^{-7})	REF	O	O	794139-1	_____
A4A2	1st LO Synthesizer	---	S	S	774003-1	_____
A4A3	2nd LO Synthesizer	---	S	S	774004-1	_____
A4A4	3rd LO Synthesizer	---	S	S	774005-1	_____
A4A5	Variable BFO	VBFO	O	O	794149	_____
A5	Digital Motherboard	---	S	S	794083	_____
A5A1	Receiver Interface	---	S	S	794108-1	_____
A5A2	Synthesizer Interface	---	S	S	794110-1	_____
A5A3	Microprocessor	---	S	S	794109-1	_____
A5AX	Extended Memory RAM	EM	O	O	794137-1	_____
A5AX	Extended Memory ROM	EPROM	O	O	794136-1	_____
A5AX	RS-232 Async Interface	232	O	O	794115	_____

* Unless otherwise specified, the receiver is provided with 20, 50, 300 kHz and 2 MHz bandwidths.

S - Standard Assembly
O - Optional

TABLE 1-0. WJ-8610 SERIES RECEIVER CONFIGURATIONS (Concluded)

Ref. Desig.	Description	Option Code	WJ-8616A	WJ-8617A	Type No.	Installed Assemblies
A5AX	IEEE-488 Interface	488	O	O	794116	_____
A5AX	Digital Refresh	DRD	O	O	794122	_____
A5AX	Audio Scan Output	ASC	O	O	794150-1	_____
A5AX	Built In Test	BITE	O	O	794151	_____
A6	Front Panel Display-Red	---	S	S	794093-1	_____
A6AX	Pluggable Keyboard Control	PKC	O	O	794152	_____
A7	Phone Jack Assembly	---	S	S	791275	_____
A8	Antenna Switch	ANS	O	O	794128	_____
A9	Wideband IF Output	WBO	O	O	724013-1	_____
A9	Log Video Detection	LOG	O	O	724017-1	_____

S - Standard Assembly
O - Optional

NOTE

Refer to the Appendix following Section IV for a description of the currently available option documentation.

SECTION I

GENERAL DESCRIPTION

1.1 ELECTRICAL CHARACTERISTICS

The WJ-8610 Series consists of the WJ-8616A and WJ-8617A Receivers. Refer to the WJ-8610 SERIES RECEIVER CONFIGURATIONS, Table 1-0 (pages x through xii), for the modular differences between the WJ-8610 Series Receivers. The WJ-8610 Series Receivers were designed to fill the need for general purpose, digitally controlled receivers in the VHF/UHF range. The chassis of each receiver is identical with expansion capability built into the circuitry. This provides ease of modification by interchanging modules from the various receivers or adding optional modules to increase the receiver capabilities. In most cases, receiver modification consists of simply inserting an option module into an existing option connector on the chassis. Refer to the APPENDIX manual for a description, parts list and schematic diagram of the various options available.

The standard receivers are designed to receive AM, FM, CW and PULSE emissions over a frequency range from 20 to 1100 MHz. Refer to Table 1-1, WJ-8610 SERIES RECEIVER SPECIFICATIONS, for the specific frequency range of each receiver. The receivers are capable of manual operation and remote operation with the IEEE-488 bus or RS-232 interface option installed. In the manual mode, operating parameters are selected by depressing the appropriate pushbutton. When depressed, an illuminated LED, on the pushbutton indicates the selection. A digital display, composed of seven-segment LEDs, indicates tuned frequency, BFO offset frequency (optional), selected memory channel, relative signal strength and COR level selected.

A built-in memory provides 16 operator-programmed memory channels in the Manual and Step modes or 8 programmed frequency search bands in the Scan mode. The memory controls all receiver functions including tuned frequency, antenna selection, IF Bandwidth, Detection Mode, COR level, AGC ON/OFF and AFC ON/OFF. In the manual mode, the operator has full control of all receiver functions. In the step mode, the built-in microprocessor directs the receivers to step to each frequency stored in the memory channels in search of signal activity. In the scan mode, the microprocessor directs the receivers to search the operator-programmed bands for signal activity.

Internal frequency tuning circuitry of the WJ-8610 Series receivers include the 1st and 2nd LO Synthesizers and the 3rd synthesizer. The synthesizers determine the tuned frequency to a resolution of 100 Hz. A tuning knob on the front panel and three tuning rate pushbuttons provide tuning capability. Tuning can be performed in 1 MHz, 10 kHz or 100 Hz steps by selecting the appropriate tuning rate button. Pressing the Disable button locks the receiver to the selected frequency and disables the tuning knob, to prevent accidental frequency changes.

Ease of maintenance and flexibility is provided by the modular design concept. Nearly all functional modules plug directly into the motherboards and the connections are accessible from the bottom of the receiver, with the bottom panel removed.

1.2 MECHANICAL CHARACTERISTICS

Each receiver mounts in a standard 19-inch equipment rack, occupies 5.25 inches of vertical space and extends 19.9 inches into the rack. The main chassis top, bottom, front, rear and internal compartment panels are constructed of aluminum. Except for the Line Audio

control, which mounts on the rear panel, all operating controls are mounted on the front panel, while all input and output cables (except for the phones jack and optional tuning connector) connect to the rear panel.

A black bezel, etched with control markings, is mounted to the front panel. The pushbuttons, Display LEDs, dwell control and Optional Tuning connector all mount on a printed circuit board, positioned behind the front panel, and extend through cutouts in the front panel and bezel. All other controls (except for the ON/OFF Power Button) mount to the front panel. The power ON/OFF button mounts to the chassis and extends through the front panel and bezel.

The rear panel mounts all input and output connectors, except for the phones jack and Optional Tuning connector, mentioned above. N-type connectors are supplied for the ANT 1 and ANT 2 inputs. All other connectors are BNC type. The REF SEL switch for selecting an internal or external timebase is mounted immediately above the 1 MHz reference input/output connector. Line Audio control, R3, which controls the rear panel audio output is mounted on the rear panel along side of the audio output connector. Two rear mounted fuse holders are provided. The rectangular holder mounts the operational line fuse while the circular holder is used to house the alternate line voltage fuse. Also mounted on the rear panel are four heat sinked voltage regulators (for +15 V, -15 V and +5 V) and two rectifiers (for +9 V unregulated).

The top cover is held in place using 33 quarter-turn fasteners. Loosening these fasteners permit removal of the top cover, exposing the five main compartments. The power distribution circuit, signal monitor assembly compartment, RF/IF modules, Digital I/O modules and synthesizer modules are in separate compartments for mechanical support and shielding purposes. Removal of the top cover permits access to all of the plug-in modules.

Removal of the bottom cover, held in place by 31 quarter-turn fasteners, exposes the optional wideband IF amplifier and the three motherboards that mount the plug-in modules. All connections to the motherboards are made with push-on plugs so that replacement of a motherboard consists of removal of mounting screws and the plugs.

1.3 EQUIPMENT SUPPLIED

The equipment supplied consists of the receiver and a detachable line cord.

1.4 EQUIPMENT REQUIRED BUT NOT SUPPLIED

To obtain full use of the receiver, equipment from the following list should be selected.

1) Two antennas, 50-ohm

2) Audio monitoring equipment

   speaker panel, 600-ohm
   headphones set, 600-ohm
   tape recorder

3) HP-9825S calculator, with IEEE-488 option, for remote control operation

4) Computer terminal and/or line printer, with RS-232 option, for remote-control operation

5) IF-tape converter, 21.4 MHz to video

Table 1-1. WJ-8610 Series Receiver, Specifications

Frequency Range:	
WJ-8616A	20 - 500 MHz
WJ-8617A	20 - 1100 MHz
Detection Modes	AM, FM, CW and Pulse standard, Variable BFO, SSB and LOG optional (other modes are available on special order)
Tuning Scheme	Frequency synthesized local oscillators locked to internal reference
Reference Accuracy	1 part in 10^{-6} or external 1 MHz reference input (1 part in 10^{-7} optional)
Tuning Resolution	100 Hz
Synthesizer Tuning Speed	500 µs typical, 1 msec maximum, integers of 10 kHz and greater step size
Input Impedance	50 Ω
Input VSWR	2.5:1 Typical 3.0:1 Maximum
Noise Figure*	9.5 dB, Typical 11 dB maximum, 20 - 500 MHz; 10.5 dB, Typical 11 dB maximum, 500 - 1,100 MHz
Third Order Intercept Point	0 dBm typical
Second Order Intercept Point	+50 dBm, minimum
Preselection	Automatically switched, suboctave bandpass filters
LO Radiation	-100 dBm typical; -90 dBm, maximum
Image Rejection	100 dB typical; 90 dB, minimum
IF Rejection	95 dB typical; 90 dB, minimum
Internal Spurious	Equivalent to -110 dBm maximum at the RF input
Reciprocal Mixing	With an input signal at a rated sensitivity level; an out-of-band signal removed seven times the 50 kHz IF bandwidth at a level 70 dB above rated sensitivity will not degrade the desired output signal ratio (S+N)/N by more than 3 dB.
IF Bandwidths	4 IF bandwidths standard (see Table 1 for standard available bandwidths)
IF Shape Factor	3:60 dB. See Table 1
Final IF	21.4 MHz, -20 dBm Nominal Output Level
AM Stability	6 dB maximum from AGC threshold to a level 100 dB above AGC threshold (maximum input -5 dBm)
Switched Video Output	1 volt peak to peak, minimum, into 91 ohm load for FM with peak frequency deviation at 30% of the IF Bandwidth and AM with 50% modulation. DC coupled for FM and AM
FM Monitor	DC coupled FM output, 1 volt peak minimum, into 91 ohm load

Table 1-1. WJ-8610 Series Receiver, Specifications (Cont'd)

Table 1. Standard Available Bandwidths

Bandwidth (kHz**)	Shape Factor 3:60 dB BW	20-1100 MHz †* Sensitivity (dBm)
10	3:1	-104
20	3:1	-101
50	3:1	-97
75	3:1	-95
100	3:1	-94
250	4:1	-90
300	4:1	-89
500	5:1	-87
1000	4:1	-84
2000	4:1	-81
4000	4:1	-78

Video Amplifier Frequency Response . . . . . DC to ≈ 1/2 IF Bandwidth for FM Monitor; DC to ≈ 1/2 IF Bandwidth for AM/FM Switched Video Output

Line Audio Output . . . . . 10 mW, minimum, into 600 ohms for 50% AM or FM peak frequency deviation equivalent to 30% of the IF bandwidth

COR/Squelch . . . . . Adjustable threshold from noise level to approximately 40 dB above noise. COR provides 100 mA current "sink-to-ground" for switching; +24 Vdc maximum external voltage. (External current limiting must be provided.)

*Antenna switch option add 1 dB to noise figure and sensitivity.

**Unless otherwise specified the Receiver is provided with 20, 50, 300 kHz and 2 MHz IF Bandwidths.

†Sensitivity Conditions:

AM - Input signal AM modulated 50% by a 1 kHz tone, will produce a minimum video output (S+N)/N ratio of 10 dB.

FM - Input signal FM modulated at a 1 kHz rate with a peak deviation equal to 30% of the selected IF BW, will produce a minimum video output (S+N)/N ratio of 17 dB. (Note: A 400 Hz modulation rate is required for the 10 kHz IF BW.)

Table 1-1. WJ-8610 Series Receiver, Specifications (Concluded)

Signal Monitor:	
Sweepwidth	0 - 4 MHz continuously adjustable
Resolution	10 kHz
Sweep Rate	Adjustable to 15 - 25 Hz
Marker	Center frequency (locked to receiver frequency standard)
Display	Lin/Log
CRT	1 x 3 inches nominal dimensions
PAN	Provides pan display during SCAN/STEP modes with optional digitally refreshed display
Temperature Range:	
Operating	$0^{o}C$ to $50^{o}C$
Non-Operating	$-20^{o}C$ to $80^{o}C$
Power Requirement	110, 120/220, 240 Vac; 47-400 Hz; 105 watts
Dimensions	19-inch rack mount, 18-inch depth (excluding connectors and handles), and 5.25 inch panel height
Weight	50 pounds, approximately

Receiver Inputs/Outputs:

- Antenna Input (Type N) (2)
- External Reference Input (BNC)
- Optional Tuning Input (Front Panel)
- Optional Remote Control In/Out (IEEE-488) (RS-232C) (MIL-STD-188C)
- Wideband 21.4 MHz IF Output (BNC)
- Selected Bandwidth 21.4 MHz IF Output (BNC)
- COR (BNC)
- FM Monitor Output (BNC)
- AM/FM Video Output (BNC)
- Audio Output (600 Ω BNC, Rear Panel Adjustable)
- Phone Output (Front Panel, Front Panel Adjustable)
- Optional Display X-Y Outputs (BNC)
- AC Input

SPECIFICATIONS NOTE

The specifications and the design of the Type WJ-8610 Series VHF/UHF Receivers as indicated in the preceding table are subject to change in accordance with modification improvements.

SECTION II

INSTALLATION AND OPERATION

2.1 UNPACKING AND INSPECTION

Examine the shipping carton for damage before the equipment is unpacked. If the carton's exterior appears to be damaged, try to have the carrier's agent present when the equipment is unpacked. If this is not possible, retain all packing material and shipping containers for the carrier's inspection if damage to the equipment is evident after it has been unpacked. Also, verify that the equipment is complete as listed on the packing slip. Contact the Watkins-Johnson Company or your Watkins-Johnson representative for any discrepancies or shortages.

2.2 INSTALLATION

The receiver is designed for mounting in a standard 19-inch equipment rack. It occupies 5.25 inches of vertical rack space and extends approximately 19.5 inches into the rack to the tips of the rear protective handles. Do not rely solely on front panel mountings to support the receiver. The use of Jonathan Type QD110 slides, mounted to the sides of the receiver, is preferred. The rack should allow a free flow of air through the top and bottom covers and the side panels, as well as around the outer surfaces of the receiver.

Access to the rear panel should be allowed so that input and output connections can be made or changed conveniently, if desired.

The front and rear panel connections are described in Table 2-1. As a reference for the panel connectors, refer to Figure 2-1.

NOTE

Before power is applied to the unit be sure that the selected line voltage for the receiver matches the line voltage being used.

2.2.1 CONNECTOR SIGNALS

2.2.1.1 Line Cord Receptacle And Voltage Selector Fuse Block - This multi-functioned assembly should always be inspected before installation of the receiver in a new location. With the line cord unplugged, the clear plastic window can be slid over the male power receptacle prongs. This exposes the line fuse and a hinged plastic fuse pull lever.

Swinging the lever to the left ejects the fuse from the holder and frees a line-voltage-select pc wafer, at the bottom of the assembly. Looking down on the pc wafer, at a slight angle, the selected line voltage for the receiver will show on the left side (either 100, 120, 220, 240 Vac). If the voltage shown does not match the available line voltage, remove the pc wafer and install it so that the closest line voltage is visable with the pc wafer in position. The pc wafer should be set in the voltage position closest to the line voltage being used. Then, install the fuse suitable for the line voltage: 1 ampere slow-blow for 100 Vac and 120 Vac or 1/2 ampere for 220 Vac and 240 Vac. Install the other fuse in the alternate fuse holder.

Table 2-1. Table Of Connectors

ANT 1	ANTENNA INPUT	(Type-N) RF Input From #1 Antenna
ANT 2	ANTENNA INPUT	(Type-N) RF Input From #2 Antenna
J1	SW IF OUT	(BNC) Selected Bandwidth IF Output (50 ohms)
J2	FM MON	(BNC) FM Monitor Output (93 ohms)
J3	AUDIO	(BNC) AUDIO Output (600 ohms)
J4	SW VIDEO OUT	(BNC) AM/FM Video Output (93 ohms)
J5	SCAN OUT	(BNC) Scan Output
J6	X OUT	(BNC) SM Display Output
J7	Y OUT	(BNC) SM Display Output
J8	1 MHz REF	(BNC) 1 MHz Reference In/Out (50 ohms)
J20	WB IF OUT	(BNC) Wideband IF Output (50 ohms)
J21	COR	(BNC) Carrier Operated Relay
J22	REMOTE CONTROL	Remote Control Input/Output (optional)
A7J1	PHONES	Phone Output (Front Panel)
A6J1	OPTIONAL TUNING	Optional Tuning Input (Front Panel)
FL1J1	Line Cord Receptacle and Voltage Selector	Power Input

2.2.1.2 Antenna #1 Input ANT 1 - This N-type connector provides the RF input signal from the #1 antenna. Nominal input impedance is 50 ohms.

2.2.1.3 Antenna #2 Input ANT 2 - This N-type connector provides the RF input signal from the #2 antenna.

2.2.1.4 SW IF OUT J1 - The switched IF output BNC connector supplies a -20 dBm IF signal into 50 ohms. The center frequency is 21.4 MHz with a bandwidth equal to the selected IF bandwidth.

2.2.1.5 FM MON J2 - The FM Monitor BNC connector provides a DC coupled FM output. The level will be 1 volt peak, minimum, into 93 ohms.

2.2.1.6 Audio J3 - This BNC connector provides a 600 ohms audio output. This output will drive a 600 ohm load at a level to 10 mW minimum. The output level is controlled by Line Audio Control R3.

2.2.1.7 SW Video Out J4 - This Switched Video Output BNC connector provides a 1 volt peak, minimum, video signal into a 93 ohm load. The output is a DC coupled AM or FM video signal, determined by the operation mode chosen.

2.2.1.8 SCAN OUT J5 - The Scan Output BNC connector is a special sinewave output that varies in frequency with the sweep (with ASO option installed).

2.2.1.9 X OUT J6 - This BNC connector provides X axis signal monitor information to drive an external display (with DRD option installed).

2.2.1.10 Y OUT J7 - This BNC connector provides Y axis signal monitor information to drive an external display (with DRD option installed).

2.2.1.11 1 MHz REF J8 - With the REF SEL switch in the internal position, this BNC connector will provide a 1 MHz output with a level of 100 mV rms into 50 ohms In the external position, a 1 MHz reference signal must be applied to J8 to provide a time base for the receiver. The level of the external signal must be at least 100 mV but less than 5 V. into 50 ohms.

2.2.1.12 WB IF OUT J20 - The Wideband IF Output BNC connector provides a -30 dBm IF signal into 50 ohms. The center frequency is 21.4 MHz with a bandwidth of 4 MHz.

2.2.1.13 COR J21 - The Carrier-Operated-Relay BNC connector provides a 100 mA current-sink to ground for control of external equipment. The maximum external voltage that can be applied is +24 VDC.

2.2.1.14 Remote Control J22 (optional) - The Remote Control multipin connector allows the receiver to interface with other equipment via an optional interface bus. This permits the receiver to be controlled from an external source or it can be programmed to supply signals to other receivers.

2.2.1.15 Phones A7J1 - The Phones Jack, mounted on the front panel, provides an audio signal of 10 mW, minimum, into 600 ohms. This signal is capable of driving a standard 600 ohm headphone set.

2.2.1.16 Optional Tuning A6J1 - The optional tuning multipin connector, permits receiver control using an optional external keyboard.

2.3 EQUIPMENT MALFUNCTIONS

This unit was thoroughly inspected and factory adjusted for optimum performance prior to shipment. If any malfunctions are encountered after following the recommended installation procedures, verify that the correct input signals are present at the proper jacks. Maintenance and troubleshooting of the unit can be aided by using the schematics shown in Section IV of this manual. Contact with your Watkins-Johnson representative or the Watkins-Johnson Company, CEI Division, Gaithersburg, Maryland should be made, to prevent possible voiding of the warranty prior to taking any corrective maintenance action.

2.4 OPERATION

All operating controls and displays are described in Table 2-2. Depression of a pushbutton will illuminate an LED on the button, indicating that particular function is active. Depressing any pushbutton in a group will deactivate any previously selected button in that group.

2.4.1 CONTROLS AND INDICATORS

2.4.1.1 Push ON/OFF Power - This pushbutton applies power to the unit. When pushed, the button will remain partially depressed, indicating the switch is energized. Depressing the button again will cause the button to return to its fully extended OFF position.

On power up, the receiver will be set to the operating mode and parameters that were present prior to the last power interruption. However, if the Scan mode was active when the receiver was last turned off, it will return at the beginning of the scan sequence, rather than at the point where power was interrupted.

Table 2-2. Table of Controls and Indicators

PUSH ON/OFF POWER	Applies power to the receiver.
DETECT MODE (AM, FM, CW, PLS)	Selects the mode of operation.
BANDWIDTH	Selects the IF bandwidth.
AFC	Activates automatic frequency control.
AGC	Activates automatic gain control to the RF and IF amplifiers.
COR LEVEL UP/DOWN	Selects the level at which the COR function activates.
MEMORY SELECT UP/DOWN	Selects the desired memory channel.
BFO	Optional feature to permit variation of BFO frequency when the Variable BFO Option is installed.
TUNING RATE PUSH (1 MHz, 10 kHz, 100 Hz)	Selects the increments of the frequency being tuned
TUNING KNOB	Controls the tuned frequency of the receiver.
DISABLE	Locks receiver to the displayed frequency and disables tuning knob.
ANT 2	Selects RF input from Antenna 2.
STO	Stores the selected receiver functions into the displayed memory channel.
MAN	Selects manual operation.
REM	Selects either the local or remote mode of operation.
RCL	Recalls and displays information stored in active memory channel.
EXC	Sets receiver in accordance with active memory channel.
CLR	Resets the receiver front panel and clears the memory.
SCAN	Scans operator programmed bands for signal activity.
STEP	Steps to each frequency stored in the memory channels in search of signal activity.
DWELL	Sets the period spent at each frequency or band in the SCAN and STEP modes.
AUDIO GAIN	Controls the audio signal at the Phones Jack.
RF/IF GAIN	Manually controls the gain of the RF and IF amplifiers
INTENSITY	Controls the intensity of the Signal Monitor's CRT
FOCUS	Provides focus of the trace on the CRT.
SWEEP RATE	Controls the rate at which the Signal Monitor sweeps the spectrum.
SWEEP WIDTH	Controls the width of the spectrum being viewed.
CENTER FREQ	Controls the horizontal position of the IF band displayed.

Table 2-2. Table of Controls and Indicators (Continued)

GAIN	Controls the amplitude of the signal displayed on the CRT
MARKER	Superimposes a 21.4 MHz reference marker on the IF signal displayed.
LIN/LOG	Selects either a linear or logarithmic vertical display.
DIGITAL DISPLAY	Displays digitally the COR LEVEL SELECTED. Relative Signal Strength, BFO offset frequency, Memory Channel selected and the Receiver Tuned Frequency.

2.4.1.2 DETECT MODE - Depressing a button in the DETECT MODE group will select the desired receiver detection mode. An LED on the pushbutton will light indicating the active mode. The operator may select standard AM, FM, CW or PULSE modes. LOG, USB and LSB are optionally available.

2.4.1.3 BANDWIDTH - This group of pushbuttons allows the operator to select one of four IF bandwidths (5th IF bandwidth optional). An LED will light on the active button. indicating the selected bandwidth.

2.4.1.4 AFC - Depression of the AFC pushbutton switches the Automatic Frequency Control circuitry on (AFC LED illuminated) or off (AFC LED extinguished). When this function is enabled, it will correct for any frequency drift to keep the receiver locked on to the desired signal. as long as the signal strength is sufficient to exceed the programmed COR level.

NOTE

1. IF AFC is selected, the COR level should be set such that the COR LED is off when no signal is present. This will prevent the AFC circuitry from hunting or attempting to correct the RF frequency, in the absence of a valid signal.

2. With two signals in close proximity, the AFC could lock on to the stronger signal. Therefore, when monitoring a low level signal, in the presence of stronger signals close in frequency to the desired signal, it is advisable to select AFC OFF.

2.4.1.5 AGC - Depressing the AGC pushbutton switches control of the RF/IF gain between Automatic Gain Control (AGC LED illuminated) and Manual Gain Control (AGC LED extinguished). When in the AGC mode, the RF/IF gain is automatically controlled by the internal AGC circuitry. In the Manual Gain Control mode, receiver RF/IF gain is set by rotaing the front panel RF/IF Gain control. During a scan, if AGC is selected as one of the programmed parameters, it will be off during the scan and the receiver will be set at maximum gain. When a signal is detected and the receiver is set to the "Scan Continue" mode, the AGC will be then activated to control receiver gain.

2.4.1.6 COR LEVEL - Two pushbuttons are provided to set the level at which the COR and SQUELCH circuits activate. The COR level is adjustable from noise level to approximately 40 dB above noise. When the COR level is exceeded, both the COR and AUDIO circuits activate. An LED, on the down button, lights when the level is exceeded. With "00" displayed in the COR window, the COR level is set to minimum and the COR circuit will be active at all times. A display of "--" indicates maximum level. keeping the COR circuit inactive at all signal levels. The COR Level also controls the activation of automatic frequency control when AFC is selected. This circuit prevents AFC from affecting the operation of the receiver until the signal level is above the set COR level. When AFC is selected, the COR Level should be increased until the COR LED extinguishes, with no signal present.

2.4.1.7 MEMORY SELECT - Two pushbuttons are provided to select the desired memory channel. Pressing the up button will count up through the memory channels while the down button will count down. Each memory channel stores all receiver information (COR LEVEL, RF/IF GAIN, AFC and AGC STATUS, ANTENNA. DETECT MODE, BANDWIDTH, OPTIONAL BFO FREQUENCY and TUNED FREQUENCY).

2.4.1.8 BFO (Optional) - Depressing this pushbutton permits offsetting of the 21.4 MHz BFO frequency when the Variable BFO Option is installed. When depressed, the BFO frequency can be varied ±1.99 kHz, using the tuning knob.

2.4.1.9 TUNING RATE - Depressing one of the three tuning rate pushbuttons will cause the tuned frequency to change in 1 MHz, 10 kHz or 100 Hz steps as the tuning knob is rotated.

2.4.1.10 TUNING KNOB - Rotation of this knob will change the receiver tuned frequency. The frequency will change at a rate determined by the tuning rate pushbuttons.

2.4.1.11 DISABLE - Depressing this button removes control of the tuned frequency by the tuning knob. The receiver will remain locked at the last selected frequency. Depressing any tuner related pushbutton will restore control to the tuning knob.

2.4.1.12 ANT 2 - This pushbutton selects the RF input from either the ANT 1 or ANT 2 input connector. When the ANT 2 pushbutton LED is illuminated, ANT 2 is selected. When the LED is extinguished, ANT 1 is selected.

2.4.1.13 STO - Depression of the STO pushbutton will transfer the selected receiver functions into the active memory channel. The TUNED FREQUENCY, AFC, AGC, RF/IF GAIN, COR LEVEL, BANDWIDTH, DETECT MODE, OPTIONAL BFO FREQUENCY and ANTENNA selections will be stored simultaneously into the channel displayed in the Memory Select window. After the data is stored, the Memory Select display is incremented to the next higher memory channel.

2.4.1.14 MAN - The MAN pushbutton permits the return to the manual mode of operation from the Scan, Step or Memory Recall modes. When returning from Recall, a single depression of the MAN pushbutton returns the receiver to the Manual mode. When returning from the SCAN or STEP mode, a single depression places the receiver into the SCAN or STEP CONTINUE modes respectively. A second depression places the receiver into the MANUAL operating mode.

2.4.1.15 REM - Permits switching, at the receiver, between the local and remote modes of operation. The REM pushbutton LED is illuminated when in the remote mode and extinguished when in the local mode. When switching between modes is performed by a remote controlling device, the REM pushbutton LED indicates the operating mode.

2.4.1.16 RCL - The RCL pushbutton recalls the receiver information stored in the active memory channel and displays the information on the front panel display and indicator lights. The display of the memory information does not affect the receiver operation. The receiver will remain locked to the previously selected functions and frequency.

2.4.1.17 EXC - Depressing the EXC button sets the receiver in accordance with the frequency and function selection stored in the active memory.

2.4.1.18 CLR - The CLR pushbutton activates a three step clear sequence that resets the receiver front panel and clears the memory. Depressing the CLR pushbutton one time initializes the clear sequence. The CLR LED illuminates, indicating that the clear sequence has been initialized, but the front panel and memory are not affected. This sequence can be aborted by depressing any front panel pushbutton, other than CLR. Depressing CLR a second time resets the front panel to: AGC ON, AFC OFF, BW #1, AM, MAN, COR-00, MEM-00, ANT 1, 20.000 MHz with tuning disabled. The clear sequence can be aborted at this time without clearing the memory by depressing any front panel pushbutton, other than CLR. Depressing the CLR pushbutton a third time completes the clear sequence. The memory is cleared and the CLR LED is extinguished.

2.4.1.19 SCAN - In the SCAN mode the receiver will search up to 8 operator programmed bands for signal activity greater than the programmed COR level. When signal activity is present, the receiver will stop until the signal falls below the COR level or the operator again depresses the SCAN button. With the inclusion of the Extended Memory option (EM), SCAN capabilities can be increased to 48 operator programmed frequency bands.

2.4.1.20 STEP - In the STEP mode, the receiver will step to the frequency set in each of the 16 memory channels. When signal activity greater than the programmed COR level is present, the receiver will stop until the signal falls below the COR level or the operator again depresses the step button. With the inclusion of the Extended Memory option (EM), STEP capabilities can be increased to 96 memory channels.

2.4.1.21 DWELL - The DWELL control sets the time period spent at each Scan increment or Step frequency in the SCAN or STEP modes. The DWELL is adjustable from approximately 1 msec (CCW) to 4 sec (CW).

2.4.1.22 AUDIO GAIN - The AUDIO GAIN control adjusts the level of the audio signal present at the phones jack. This level is adjustable from 0 to 10 mW.

2.4.1.23 LINE AUDIO - This rear panel control adjusts the level of the audio signal present at the rear panel audio output J3. The level of the signal is adjustable from 0 to 10 mW.

2.4.1.24 RF/IF GAIN - The RF/IF GAIN control provides manual control of the RF and IF amplifiers when AGC is not selected.

2.4.1.25 INTENSITY - The INTENSITY control varies the brightness of the trace on the CRT of the signal monitor.

2.4.1.26 FOCUS - The FOCUS control provides a means of obtaining a sharp trace on the CRT.

2.4.1.27 SWEEP RATE - The SWEEP RATE control is used to obtain optimum resolution at the sweep width being used and to prevent loss of sensitivity by sweeping too fast. The sweep rate is adjustable to 25 Hz.

2.4.1.28 SWEEP WIDTH - The SWEEP WIDTH control varies the width of the frequency spectrum being viewed. In a fully clockwise position, the maximum bandwidth is displayed. The sweep width is adjustable from 0-4 MHz.

2.4.1.29 CENTER FREQ - The CENTER FREQ control varies the horizontal position of the vertical pips on the CRT. Use this control to center the frequency spectrum under the center mark of the CRT.

2.4.1.30 GAIN - The GAIN control varies the height of the vertical pips displayed on the CRT. This control is adjusted to maintain the desired height of the display.

2.4.1.31 MARKER - In the ON position a 21.4 MHz marker is superimposed on the display as a reference marker. The marker frequency is locked to the receiver synthesizer.

2.4.1.32 LIN/LOG - The LIN/LOG switch provides a linear or logarithmic vertical deflection. The LIN position will provide a display with a vertical deflection proportional to the signal strength. In the LOG position, the vertical deflection is proportional to the log of the signal strength. This provides greater resolution of weaker signals in the log position.

2.4.1.33 DIGITAL DISPLAY - The DIGITAL DISPLAY is composed of seven-segment LED's. The display provides a digital read out. displaying the tuned frequency, COR level selected, relative signal strength, active memory channel and BFO offset frequency (when incorporated).

2.4.2 LOCAL OPERATION

2.4.2.1 Manual Control

The manual mode of operation permits total control of the receiver utilizing the front panel pushbuttons and control knobs. All operating parameters are selected utilizing the controls described in paragraph 2.4.1.

In addition to manually operating the receiver, the manual mode also permits the operator to program the receiver's 16 channel memory (96 channel memory with the EM, Extended Memory, option installed) and to enter into the Scan or Step modes of operation.

2.4.2.2 Memory Programming

The receiver's memory permits storage of receiver parameters such as COR level, RF/IF Gain, AFC and AGC status, ANTENNA, DETECTION MODE, IF BANDWIDTH and TUNED FREQUENCY. This stored data can be used to provide the desired receiver parameters during the SCAN or STEP modes of operation, or it can function as a scratch-pad memory in the manual mode to retain particular receiver settings. Programming of the memory is performed as follows:

Depress Memory Select Up/Down	Hold the Up or Down Memory Select pushbutton depressed until the number corresponding to the desired memory channel is displayed in the Memory Select window (00-15 standard; 00-95 optional).
Depress COR Up/Down	Hold up or down COR LEVEL pushbutton depressed until the number corresponding to the desired COR LEVEL is displayed in the COR window (00-40 or --).
Depress AFC	Changes status of AFC. AFC on - LED illuminated AFC off -LED extinguished
Depress AGC	Changes AGC status. Automatic Gain Control - LED illuminated Manual Gain Control - LED extinguished

Depress BW	Depress Bandwidth pushbutton corresponding to the desired IF Bandwidth. LED on the selected Bandwidth pushbutton illuminates.
Depress DETECT	Depress pushbutton corresponding to the desired Detection mode. AM, FM, CW, or Pulse detection standard, LOG and SSB optional. LED on selected Detection mode pushbutton illuminates.
Rotate Tuning Knob	Rotate the tuning knob CW or CCW until the desired frequency is displayed by the frequency display above the tuning knob. The tuning increments are determined by the 1 MHz. 10 kHz and 100 Hz Tuning Rate pushbuttons.
Depress ANT 2	Selects RF input from the standard Antenna 1 or Auxiliary Antenna 2. LED illuminated - Antenna 2 selected LED extinguished - Antenna 1 selected
Depress STO	Stores the selected receiver parameters into the memory channel displayed in the memory select window. Once the information is stored, the memory channel display is automatically incremented to the next higher channel.

Data stored in each memory channel can be recalled by depressing the RCL pushbutton. When RCL is depressed, the receiver parameters stored in the channel displayed in the memory select window will be displayed on the front panel indicators of the receiver. The receiver remains at the parameters set prior to the selection of RCL. Depression of the MAN pushbutton returns the indicators to that of the receiver setting or depression of EXC (EXECUTE) sets the receiver to the recalled data on the front panel.

2.4.2.3 SCAN Mode

In the SCAN Mode, the receiver will scan up to 8 operator programmed frequency bands utilizing the standard receiver memory. Up to 48 programmed frequency bands can be scanned when the receiver is equipped with the extended memory option (EM). All receiver

parameters and the start frequency of each scan are stored in the even numbered memory channels and the stop frequency is stored in the odd channels. Upon initiation of the Scan, the receiver will begin the scan at the frequency stored in the even numbered channel. setting the receiver to the parameters stored in that channel, and continue to the next higher odd numbered channel, containing the stop frequency. The scan is performed in discrete steps equal to approximately one-half the programmed IF bandwidth. The SCAN increments for the various IF bandwidths are listed in the Table of Scan Increments (Table 2-3).

Table 2-3. Table of Scan Increments

SELECTED IF BANDWIDTH	SCAN INCREMENT	SELECTED IF BANDWIDTH	SCAN INCREMENT
10 kHz, 20 kHz	10 kHz	300 kHz	150 kHz
50 kHz	20 kHz	500 kHz	250 kHz
75 kHz	30 kHz	1 MHz	500 kHz
100 kHz	50 kHz	2 MHz	1 MHz
250 kHz	120 kHz	4 MHz	2 MHz

If the COR LED is illuminated when the Scan is initiated. the receiver will wait 50 msec. before stepping to the next frequency increment, to permit the COR circuits to deactivate. After stepping to the new frequency, if the COR LED extinguishes comes back on, the receiver will lock on to the signal. Otherwise, the Scan will continue. When programming the COR level as one of the Scan parameters, it should be set at a level that will permit the LED to extinguish in the absence of signals, but cause the LED to illuminate when signal activity is present. Otherwise, the COR LED will remain on at all times and the receiver will not stop on a signal during the scan.

During the scan, if AFC is selected, the AFC LED will remain illuminated. When a signal is detected, and the COR LED illuminates, the AFC will adjust the receiver to center the signal within the IF bandwidth. IF AGC is selected, the AGC LED will extinguish and the receiver will operate at maximum gain during the scan. AGC will remain inactive until the operator selects the Scan Continue mode.

The type Scan sequence is determined by the channel number displayed in the memory select window, when the SCAN button is depressed. When an even number is displayed, the receiver will begin the scan at the even channel and continue to the next odd number in sequence. This single band will continue to be scanned until signal activity greater than the programmed COR level is detected or until the MAN pushbutton is depressed. If an odd number is displayed when the Scan is initiated. the scan will begin scanning at channel 00 and scan each band until it reaches the odd number that was present when the scan button was depressed. This multiple Scan sequence will continue until signal activitv greater than the programmed COR level is detected or the MAN pushbutton is depressed.

Prior to initiating the Scan function, the memory must be programmed. using the procedures described in paragraph 2.4.2.2. Using this procedure, enter the operating parameters and start frequency into the even channel and then step the memory select to the next higher odd channel. Enter the stop frequency (stop frequency must be greater than start frequency). Upon completion of memory programming, the Scan function can be initiated as follows:

Depress Memory Select Up/Down	Hold the Up or Down pushbutton depressed until the desired memory channel is displayed in the memory select window (n). This step will determine the type scan sequence that will be selected. n = odd number - Receiver will first scan from channels 00 to 01. Each succeeding band will be sequentially scanned up to and including the band comprised of channels n - 1 to n. n = even number - Receiver will scan a single band from channel n to n + 1.
Depress SCAN	Initiates the selected Scan sequence. Scan pushbutton LED illuminates and the front panel indicators reflect the programmed parameters for the active band. The frequency display displays the frequency of each increment of the Scan. If AGC has been selected as one of the programmed parameters, the AGC LED will be extinguished and the receiver will operate at maximum gain, during the Scan.
Rotate Dwell Knob	Controls the scan rate by controlling the time that the receiver dwells at each increment of the scan. Fully counterclockwise rotation selects minimum dwell time with the time increasing as the knob is rotated clockwise.

When a signal greater than the programmed COR level is encountered, the scan will stop and the COR pushbutton LED will illuminate. The receiver will remain at this frequency as long as the signal is present or until the scan button is again depressed to resume the scan sequence.

2.4.2.3.1 SCAN Continue

The Scan Continue function permits the interruption of the Scan sequence to allow manual control of the receiver. This mode permits an operator to manually optimize the detected signal and to reenter the scan sequence at the point where the interrupt took place. Entering into the Scan Continue mode from the Scan mode is performed as follows:

Depress MAN	Initiates the Scan Continue mode of operation. Scan pushbutton LED remains on and the MAN pushbutton LED illuminates. IF AFC was on during the Scan, it will be turned off and the AFC LED will extinguish. If AFC is still desired, it must be reselected by depressing the AFC pushbutton. IF AGC was selected as a scan parameter, it will be activated and the AGC LED will illuminate. The receiver gain will then be controlled by the AGC circuitry.
Operate Manual Controls	All front panel controls function as if in the manual mode of operation. Use controls to optimize response of detected signal. From this mode: a) the scan can be reentered at the point where the scan was interrupted, or b) the receiver can be placed into the manual mode of operation.
a) Reenter the Scan mode: Depress Scan	Returns the receiver to the Scan mode of operation. The MAN LED is entinguished and the SCAN LED remains illuminated. The scan is restarted at the point where it was interrupted by the Scan Continue function.

b) Enter Manual mode:	
Depress MAN	Places the receiver into the manual mode of operation from the Scan Continue mode. The MAN LED remains illuminated and the SCAN LED is extinguished.

2.4.2.3.2 Scan Lock-out (Optional)

Scan Lock-out is an optional function that is available when the Type 794137-3 Extended Memory option (EM) is incorporated in the receiver. This function permits the exclusion of selected signals from the scan to prevent the receiver from locking onto undesired signals. Lock-out data is stored in the higher order memory channels, in ascending order, according to frequency (channel 95 will store the highest lock-out frequency). The Scan mode, utilizing the Lock-out function, is described as follows:

Depress SCAN	Activates the Scan mode of operation. The SCAN LED is illuminated. The receiver will scan the programmed frequency bands until signal activity is encountered. When signal activity greater than the programmed COR level is encountered, the receiver will lock onto the signal.
Depress MAN	Places the receiver into the SCAN CONTINUE mode of operation. The SCAN and MAN LEDs are both illuminated. The receiver can now be operated manually to optimize the detected signal and the bandwidth can be changed to determine the bandwidth of the LOCK-OUT channel.
Depress LOCK-OUT	The frequency and bandwidth of the undesired signal is stored in the Lock-out memory. LOCK-OUT LED illuminates for 1 second. All signals within 1/2 of the IF bandwidth of the Lock-out frequency will be omitted from succeeding scans. If AFC has been selected, LOCK-OUT will occur after the signal is centered.

2.4.2.3.3 LOCK-OUT Channel Recall and Deletion

This mode permits the recall and display of the information stored in the lock-out channels. It also permits revision of lock-out memory by permitting the deletion of channels where lock-out is no longer desired. To activate the recall mode, the receiver must be in either the Scan Continue or Manual mode of operation. This operating mode is activated as follows:

Depress RCL	Initializes the Recall mode of operation. The RCL pushbutton LED is illuminated and the front panel displays reflect the information stored in the channel whose number is displayed in the MEMORY SELECT window.
Depress Memory Select Up/Down	Hold the MEMORY SELECT Up or Down pushbutton in until the number corresponding to the desired memory channel is displayed in the MEMORY SELECT window. When the displayed channel is a Lock-out channel, the letters "LL" will be displayed in the COR window.
Depress LOCK-OUT	Deletes the information stored in the Lock-out channel that is displayed in the memory SELECT window. The LOCK-OUT LED will illuminate for 1 second. When a channel is deleted, all lock-out channels below the deleted one will move up one location.
Depress MAN	Deactivates the Recall mode and activates the previously selected operating mode (MAN or SCAN CONTINUE).

2.4.2.4 STEP Mode

In the STEP mode, the receiver will step through up to 16 operator programmed memory channels in search of signal activity, utilizing the standard receiver memory. Up to 96 channels can be stepped through when the Type 794137-1 or Type 794137-3 Extended Memory is incorporated. Each memory channel is programmed with a complete set of receiver parameters using the memory programming procedure described in paragraph 2.4.2.2. RF frequencies need not be in ascending order as in the SCAN mode.

The number displayed in the memory select window (n) determines the highest channel that will be used in the step sequence. When the STEP pushbutton is depressed, the receiver will begin stepping all channels containing valid memory data. starting at channel 00 and continuing to channel n. This stepping sequence will continue until a signal greater than the programmed COR level is detected or until the MAN pushbutton is depressed.

If the COR LED is illuminated when the Step mode is initiated, the receiver will wait 50 msec. before stepping to the next memory channel to permit the COR circuits to deactivate. After 50 msec, if the COR LED is still on, the receiver will lock on to the signal. Otherwise, the receiver will step to the next memory channel.

Prior to initiating the Step mode, program the memory utilizing the procedure outlined in paragraph 2.4.2.2. The Step mode can then be initiated as follows:

Depress Memory Select Up/Down	Hold the Up or Down pushbutton depressed until the number corresponding to the highest desired memory channel is displayed in the Memory Select window. NOTE: The displayed number must be greater than 00.
Depress STEP	Initiates the STEP mode of operation. The STEP pushbutton LED illuminates and the front panel indicators reflect the programmed parameters in each memory channel as it is selected. The STEP sequence begins at channel 00 and sequentially steps to each channel.
Rotate Dwell Knob	Controls the time the receiver dwells at each channel in the STEP sequence. Fully counterclockwise rotation selects minimum dwell time with the time increasing as the knob is rotated clockwise.

When a signal greater than the COR level is encountered, the STEP sequence will stop and the COR pushbutton LED will illuminate. The receiver will remain at this frequency as long as the signal is present or until the STEP pushbutton is again depressed to resume the STEP sequence.

2.4.2.4.1 STEP CONTINUE

The STEP CONTINUE function permits the interruption of the STEP sequence to allow manual control of the receiver. This function permits an operator to manually optimize the detected signal and reenter the STEP sequence at the point where the interrupt took place. It also allows the operator to reprogram that memory channel if the signal is of no further interest. Entering into the STEP CONTINUE mode from the STEP mode is performed as follows:

Depress MAN	Initiates the STEP CONTINUE mode of operation. The STEP pushbutton LED remains on and the MAN LED illuminates. The front panel indicators reflect the data stored in the channel displayed in the memory select window.
Operate MANUAL Controls	All front panel controls function as in the Manual mode of operation. Use the controls to optimize the detected signal or to change parameters if the detected signal is of no interest.
Depress STO	Updates the displayed memory channel with the new or revised data. The STO pushbutton LED illuminates for 1 second when depressed.

From the STEP CONTINUE mode, the STEP mode can be reentered at the point where the STEP sequence was interrupted or the receiver can be placed into the Manual mode of operation.

a) Reenter the STEP mode:	
Depress STEP	Returns the receiver to the STEP mode of operation. The MAN pushbutton LED is extinguished and the STEP LED remains illuminated. The STEP sequence is restarted at the point where the interrupt took place.

b) Enter the MANUAL Mode:	
Depress MAN	Places the receiver into the Manual mode of operation. The MAN pushbutton remains illuminated and the STEP pushbutton LED extinguished.

2.4.2.5 Master/Slave Operation (Optional)

The Master/Slave function permits the control of up to 14 additional Master/Slave equipped receivers, utilizing the front panel controls of one of the receivers. Each receiver must be equipped with an IEEE-488 Interface. Switch #6 of the DIP switch on the IEEE-488 must be in the open position on each receiver and the remaining 5 switches are set to a binary number between 0 and 30 to designate the receiver address address 31 (11111) cannot be used as a valid address . Only one receiver can function as the master unit at a given time and the remaining receivers function as slave units when addressed.

Depress Memory Select Up/Down	Hold Memory Select Up or Down pushbutton depressed until the number corresponding to the address of the desired slave receiver appears in the Memory Select window of the Master receiver. If more than one receiver is designated with the displayed address, each receiver will respond to the Master commands.
Depress M/S	Activates the Master/Slave mode of operation and places the addressed receiver(s) in the Slave mode. The LED on the M/S pushbutton illuminates on the master unit and the remote pushbutton LED illuminates on the addressed slave unit(s). All front panel controls on the slave unit(s) are disabled except for the remote* pushbutton. All master unit controls function normally and control both the master and addressed slave units.

Depress M/S	When in the Master/Slave mode, depression of the M/S pushbutton deactivates the Master/Slave mode. The M/S pushbutton LED is extinguished.

* At the slave unit, depression of the RMT pushbutton removes the unit from control by the master and restores local control.

2.4.2.6 CURSOR (Optional)

Cursor is an optional mode of operation that is available when the Type 794137-2 (or Type 794137-3) Extended Memory. Type 794122 Digital Refreshed Display and an active Function (F↑) pushbutton are installed. In this mode, a portion of the RF spectrum can be scanned with a signal strength vs. frequency display of the scanned frequencies displayed on the signal monitor of the receiver. The tuning knob can then be rotated to position a cursor over any of the signal PIPS displayed on the signal monitor. When the cursor is positioned over the signal pip, the frequency of that signal is displayed in the frequency window of the digital display.

Prior to entering into the Cursor mode, the memory must be programmed. using the procedure described in paragraph 2.4.2.2. Store the start frequency and operating parameters into the even numbered channels and the stop frequency in the odd channels. Upon completion of the memory programming, the cursor mode may be entered into, as follows:

Depress F↑	Selects the uppercase function. All pushbutton LED's will extinguish.
Depress Cursor (Scan pushbutton)	Selects the Cursor mode of operation. The pushbutton LEDs on the front panel will again illuminate.
Depress Cursor (Scan pushbutton) a second time	Activates the Cursor Scan. The receiver will perform a single scan of the programmed band and stop. Upon completion of the Scan, the receiver will enter into the Cursor/Manual mode of operation.

Operate the Tuning Rate push-button	Select the desired tuning rate by depressing the 1 MHz, 10 kHz or 100 Hz pushbutton and rotate the tuning knob until the cursor is positioned over the desired signal pip on the signal monitor. The frequency display on the digital display indicates the frequency at which the cursor is positioned. Note: The cursor travel is not limited to the frequency band displayed on the signal monitor. Therefore, if the cursor does not appear on the signal monitor, rotate the tuning knob until the displayed frequency is within the scanned frequency band.

To disable the Cursor mode, and return the receiver to normal operation, proceed as follows:

Depress F↑	The Cursor (Scan) pushbutton LED will illuminate and all other LED's will extinguish.
Depress Cursor (Scan)	The Cursor (Scan) LED will extinguish and the selected pushbutton LED's will again illuminate. The receiver will then be restored to normal operation.

2.4.2.7 ERROR CODES

If an error condition should occur, the word "Error" along with a three digit error code will be momentarily displayed in place of the frequency display. The error codes associated with the various operating modes are as follows:

Error 501	This code will be displayed if all lock-out channels are in use and the creation of an additional one is attempted. To increase Lock-Out memory space, depress RCL and step to a channel number below the lowest existing lock-out channel. Depress LOCK-OUT. The displayed channel and all higher channel numbers will now be available for lock-out.

Error 502	This code will be displayed if an attempt is made to store data, other than LOCK-OUT data into a channel designated for LOCK-OUT.
Error 800	This code will be displayed if SCAN is initiated when the memory is programmed with the start frequency greater than the stop frequency. The memory must be programmed with the even numbered channel containing the lower frequency with the frequencies in ascending order.
Error 810	This code will be displayed if an attempt is made to initiate the STEP or SCAN mode when no valid data is stored in the memory locations to be scanned or stepped. The memory must be programmed as described in paragraph 2.4.2.2.
Error 811	This code will be displayed if an attempt is made to initiate the STEP mode when 00 is displayed in the Memory Select window. Depress the Memory Select UP pushbutton to select a channel greater than 00.

2.5 PREPARATION FOR RESHIPMENT

If the unit must be prepared for reshipment, the packaging methods should follow the pattern established in the original shipment. If retained, the original materials can be reused to a large extent or will at minimum provide guidance for the repackaging effort.

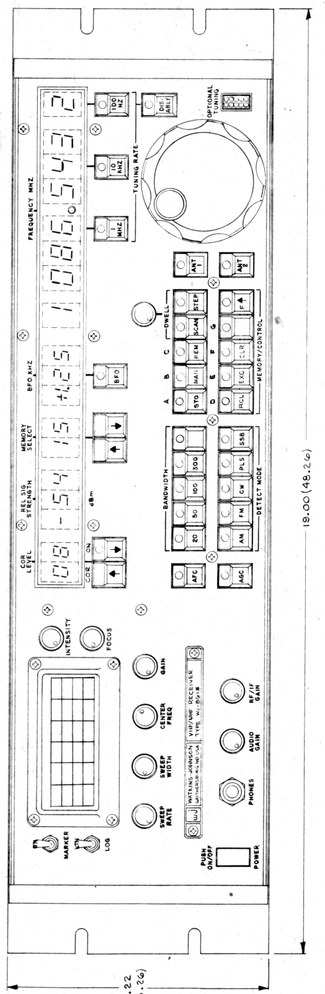

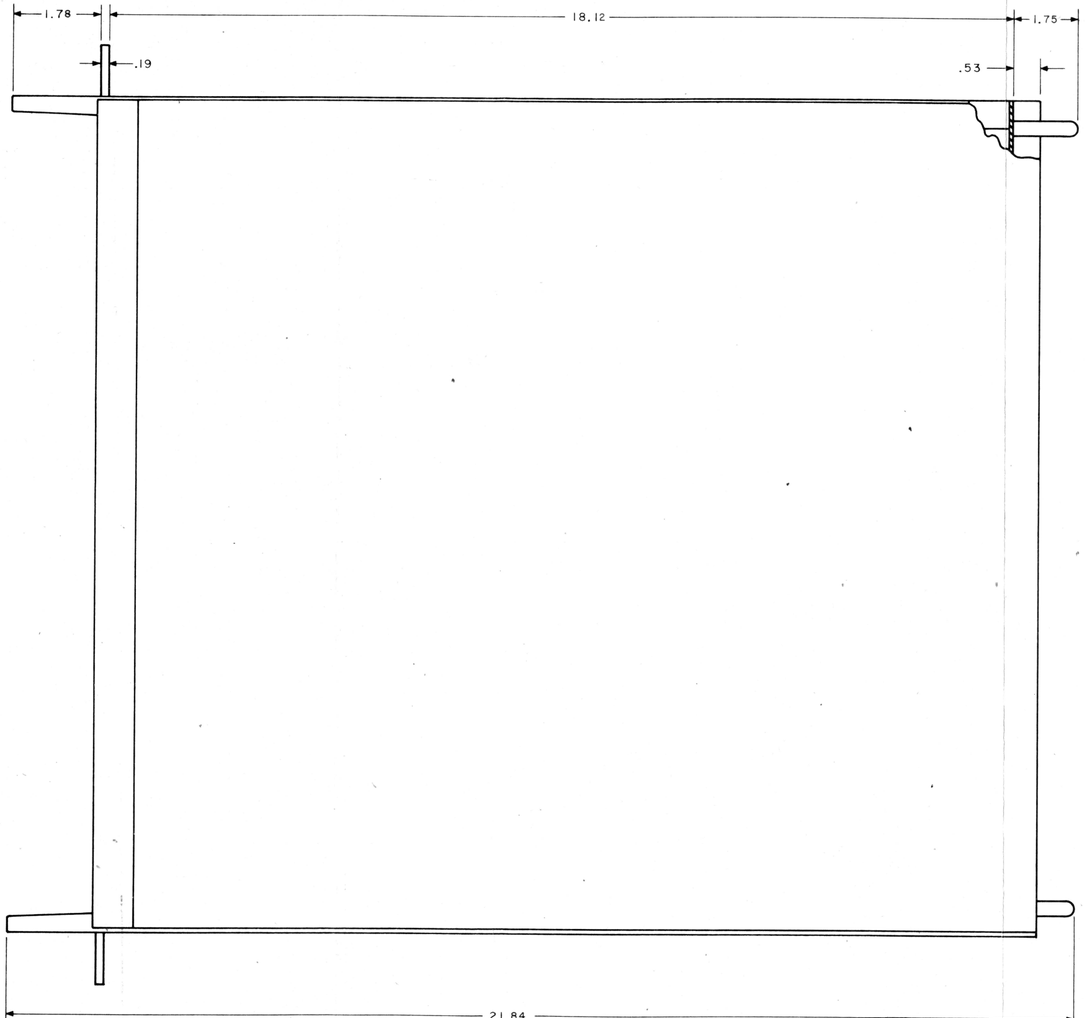

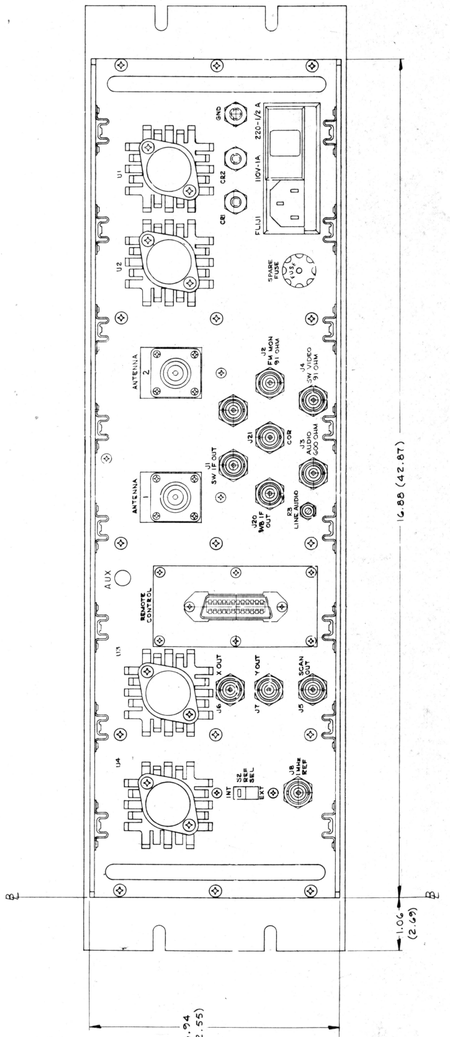

Figure 2-1. WJ-8610 Series Receiver Outline Drawing

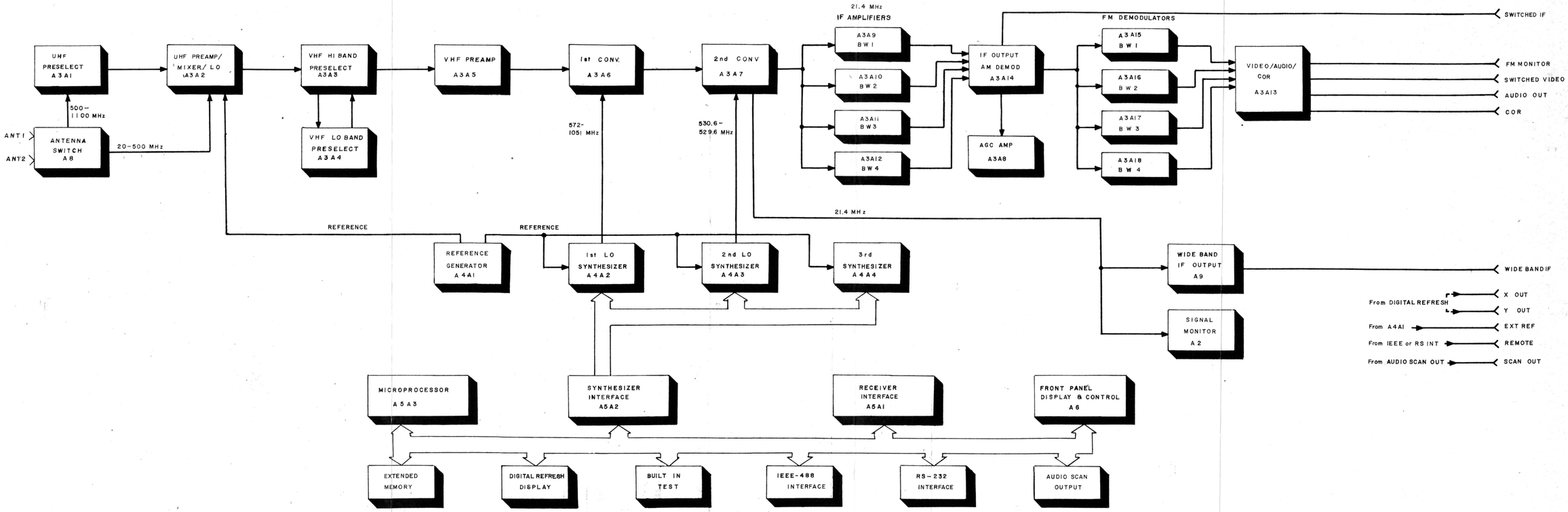

Figure 2-2 WJ-8610 Series VHF/UHF Receiver Simplified Block Diagram

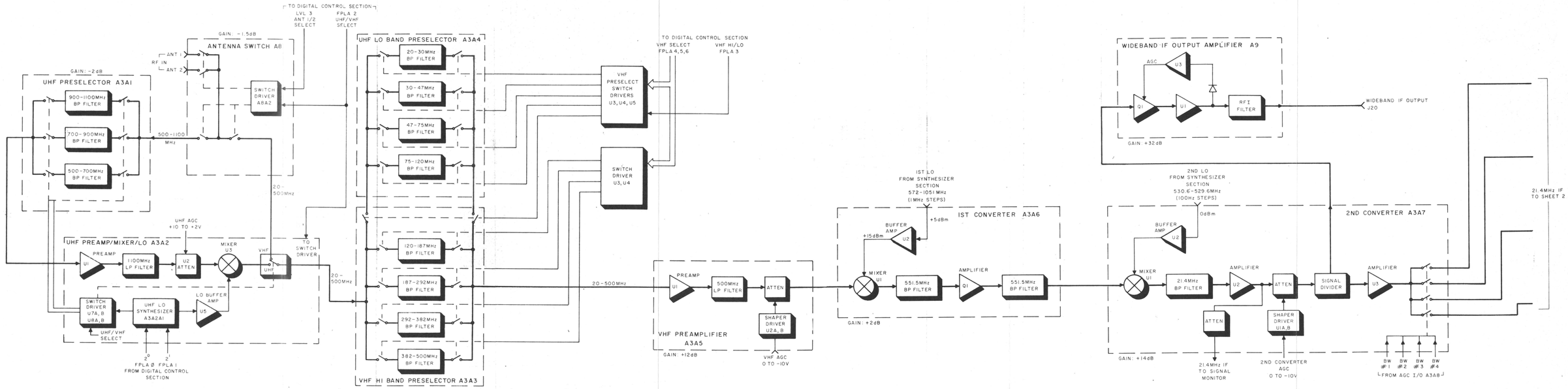

Figure 2-3 WJ-8610 Series RF/IF Section, Functional Block Diagram (1 of 2)

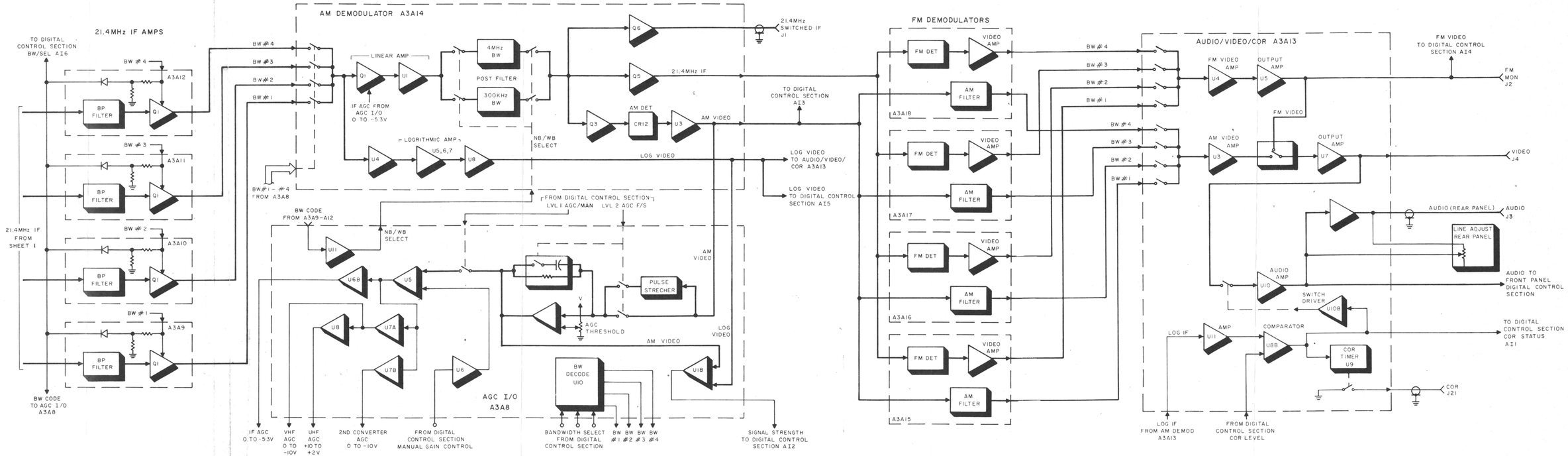

Figure 2-4 WJ-8610 Series RF/IF Section, Functional Block Diagram (2 of 2)

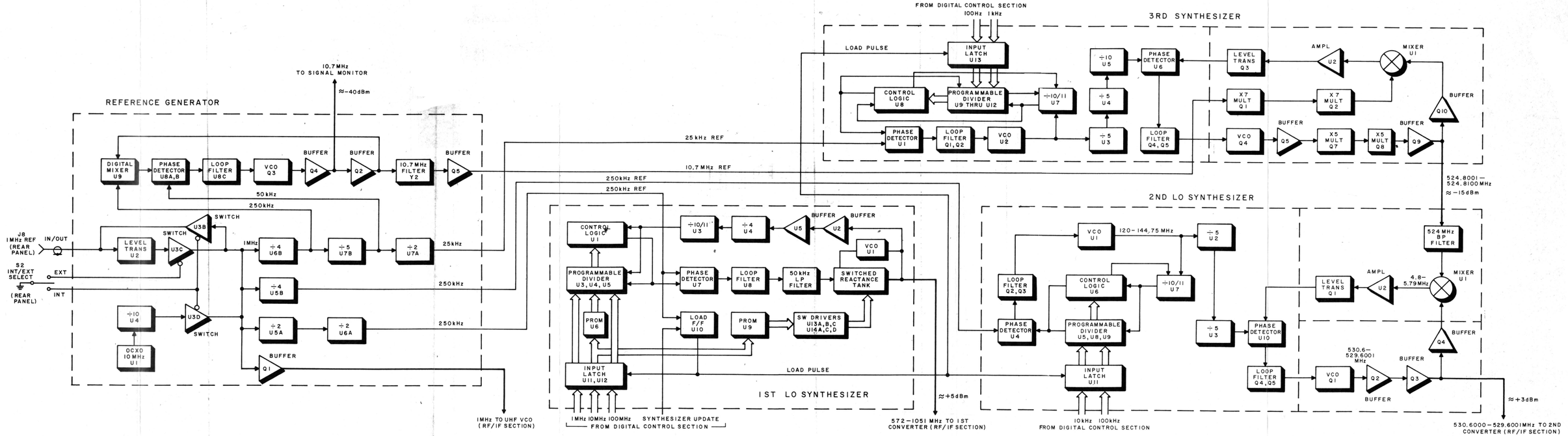

Figure 2-5 WJ-8610 Series Synthesizer Section, Functional Block Diagram

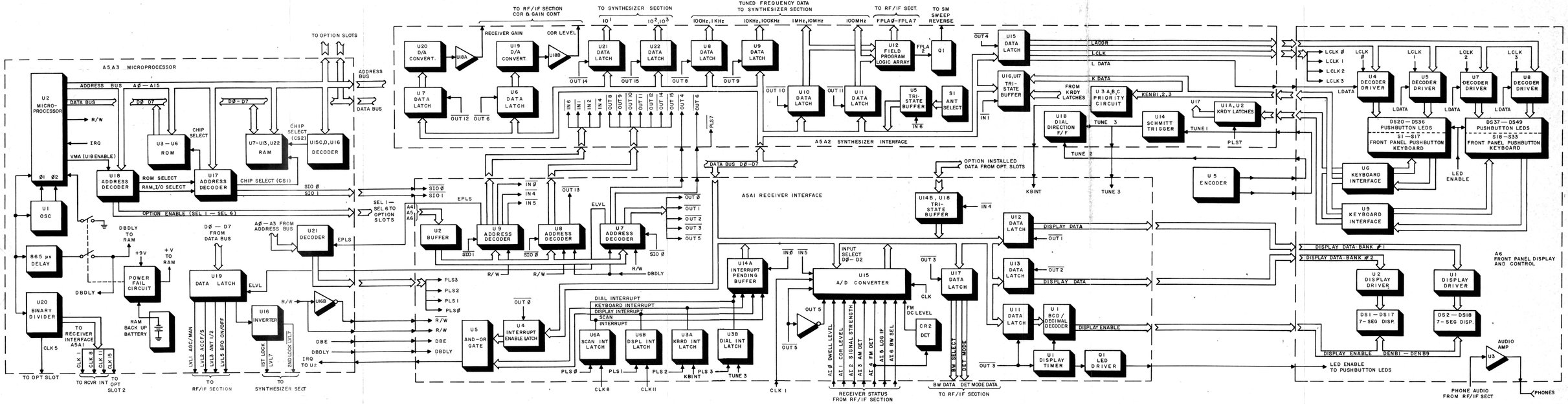

Figure 2-6 WJ-8610 Series Digital Control Section, Functional Block Diagram

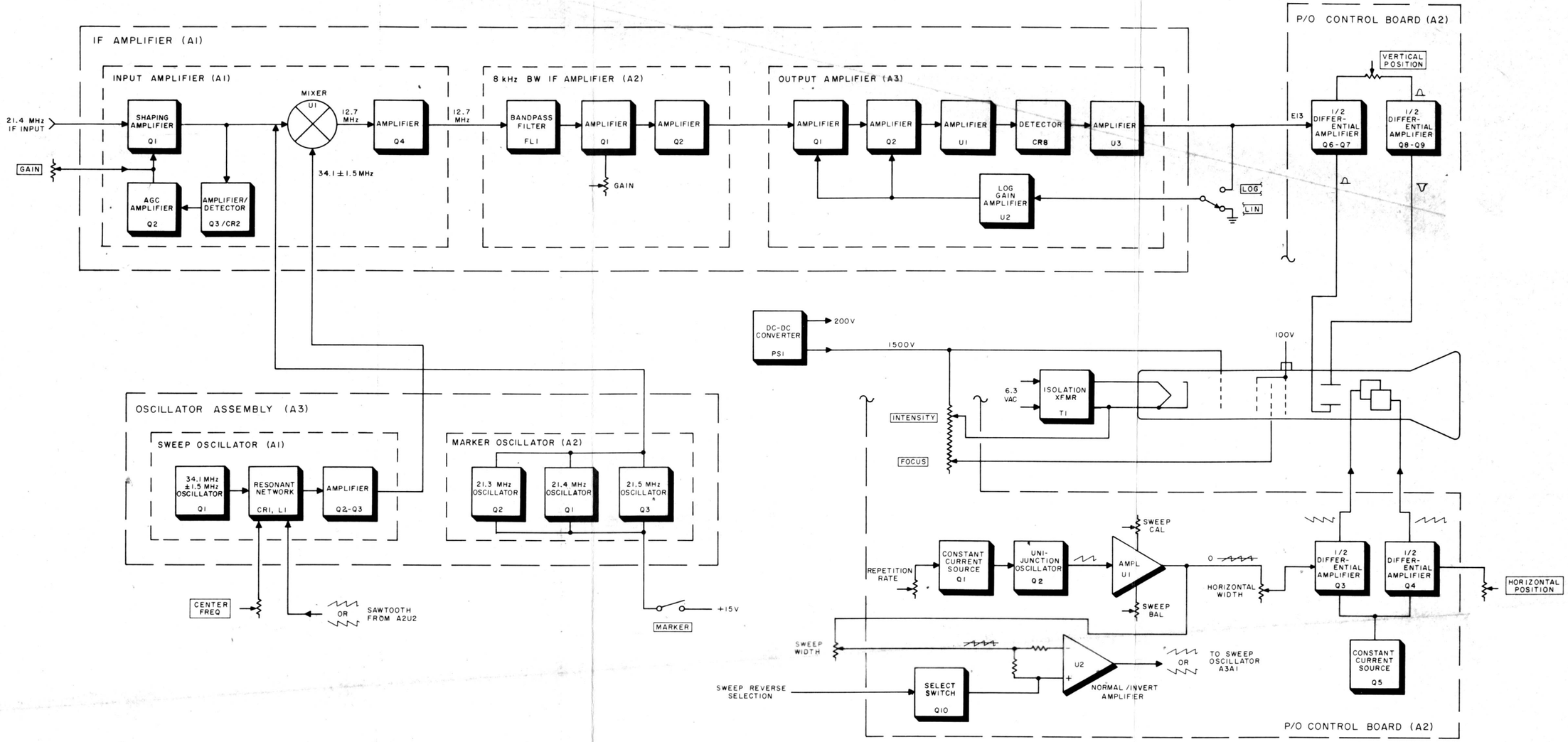

Figure 2-7 WJ-8610 Series Signal Monitor Section, Functional Block Diagram

WJ-8610 SERIES REMOTE INTERFACE OPERATION

March 1981

WJ-8610 SERIES REMOTE INTERFACE OPERATION

With the inclusion of the IEEE-488 or RS-232 Remote Interface, the WJ-8610 Series Receiver can be fully controlled using an external controlling device. The controller transmits one or more data bytes, in the form of a message, to the receiver. This message consists of a mnemonic (or binary code) representing a command or request by the controller. When the command is to set one of the receiver parameters to a specified value, it is followed by a decimal number (n or f) representing that value.

The IEEE-488 digital interface is specified as a general purpose interface for programmable instrumentation. This standard anticipates that each design using this interface will only implement a subset of the capabilities. It systematizes these subsets and introduces nomenclature for their specification. Capabilities of the IEEE interface as implemented in the WJ-8610 Series Receiver include:

SH1	source handshake
AH1	acceptor handshake
T6	basic talker with serial poll
L3	basic listener with listen only poll
SR1	service request

Essentially, this means that the receiver can talk or listen when commanded by the controller and it can issue a service request to notify the controller when it needs service. To be compatible, the controller should have the following capabilities:

C1, C2, C4, C27 AH1, SH1, T3, L1	System controller - single controller system

Up to fourteen 488 equipped receivers can interface with a single controller, with the controller being able to communicate with each receiver individually. Data is transferred between units in a bit-parallel, byte-serial form. Sixteen interconnection lines are utilized, consisting of eight bi-directional data bus lines, three data byte transfer lines, and five interface management lines. The data bus lines transfer data or address information between devices. The data byte transfer lines indicate the availability and validity of the information on the data bus lines, whether or not the devices are ready to accept data, and whether or not the data has been accepted. The interface management lines specify whether the data bus lines

are carrying data or address information, request service requests, and clear the interface and indicate the end of a transfer sequence.

A six-position DIP switch, located on the interface board, sets the binary address code for the receiver. Switch positions 1 through 5 permit address settings of from 0-31, with position 1 being the least significant bit. Position 6 enables Master/Slave (with Master/Slave incorporated). The closed positions of the switch represent a logic "0" and the open positions represent a logic "1."

All IEEE-488 Interfaces are shipped with the address preset to "6."

The RS-232 standard specifies a serial data transfer format and several control lines for interface between a DATA MODEM and a DATA SET. It is, however, commonly used to transfer data between other types of devices.

As implemented in the WJ-8610 Series Receiver, the network consists of one controller and one remote receiver. Data is transferred between the controller and receiver, in serial form, via two one-way data lines. The TX Data line transfers data from the receiver to the controller and the RX Data line transfers data to the receiver from the controller. In addition to the two data lines, associated bus control handshake lines may be used to control the data flow between the units. These lines include:

RTS	Request to Send
CTS	Clear to Send
DCD	Data Carrier Detect

Each transmitted message consists of one or more message bytes, followed by a hexadecimal "FF" to indicate the end of the message (ASCII messages may also be terminated by "LF," "CR-LF" or ";"). Each transmitted byte consists of eight data bits, an odd parity bit and a stop bit.

The data signaling rate is selectable at rates of 300, 600, 1200, 2400, 4800 or 9600 baud. A six-position DIP switch, located on the RS-232, permits the selection of the signaling rate to match that of the controller. Placing one of the switches to the closed position selects its corresponding baud rate. (All but the desired rate switches must be in the open position.)

Both the RS-232 and the IEEE-488 are byte oriented interfaces. One or more data bytes may be sent, in either ASCII or Binary format, to form a message. In the ASCII format, each data byte is an ASCII character. The message consists of a mnemonic followed optionally by a decimal number (spaces are ignored). These messages may be directly printed or displayed where the operator can readily identify the mnemonic with its corresponding function. The Binary format is used where speed is an important consideration. Only about one-fourth as many bytes are needed in this format as in ASCII and the receiver can decode the Binary messages more rapidly. The Table of Mnemonics and Binary Codes (Table I) lists the usable mnemonics and corresponding binary codes (in hexadecimal), along with a brief explanation of their function. Included in this list are codes that are unique to optional subassemblies and apply only when the option is installed in the receiver.

Table I. Mnemonics and Binary Codes

NOTE: The mnemonics in parentheses are the possible receiver responses for that function.

Mnemonic	Hexadecimal	Function
AFC	42	Turn on AFC function
AFC/	43	Turn off AFC
AFC?	44	What is state of AFC? (AFC or AFC/)
AGC	45	Turn on AGC
AGC/	46	Turn off AGC
AGC?	47	What is state of AGC? (AGC or AGC/)
AM	48	Set AM detection mode
AM?	4A	What is value of AM video? (AM n) 000-068 Range
ANT n	4B	Select antenna n
ANT?	4D	Which antenna is selected? (ANT n)
BIN	54	Set binary remote interface mode
BIN/	55	Set ASCII remote interface mode
BFO f	39	Set BFO frequency
BFO?	3B	What is BFO frequency? (BFO f)
BW n	4E	Set bandwidth number n
BW?	50	What bandwidth number is selected? (BW n) 1-5
BWC?	9C	What is bandwidth? (in kHz)
CLR	51	Perform the clear function
CLM	6C	Clear memory
COR n	57	Set the COR level: 0 minimum, 40 maximum
COR?	59	What is the COR level? (COR n)
CST?	99	What is COR status?
CW	5A	Set the CW detection mode
DET?	5F	Which detection mode is selected? (AM, FM, CW, PLS, USB, LSB)
DWL n	60	Set dwell value: 0 minimum, 255 maximum
DWL?	62	What is the dwell value? (DWL n)

Table I. Mnemonics and Binary Codes (Cont'd)

Mnemonic	Hexadecimal	Function
ERR?	65	What is the error number? (ERR n)
EXC	66	Perform the execute function
FM	69	Set FM detection mode
FM?	6B	What is the value of the FM modulation? (FM n) 000-100 range. Reads directly in % of modulation
FRQ f	3C	Set the RF frequency
FRQ?	3E	What is the frequency? (FRQ f)
INT	6C	Allow SRQ interrupts on remote interface (IEEE-488 only)
INT/	6D	Don't allow SRQ interrupts
INT?	6E	Are SRQ interrupts allowed? (INT or INT/)
LCK	94	Lockout
LGV?	71	What is the log video value? (LGV n) 000-085 range
LOG	96	Set LOG detection mode
LSB	72	Select the lower sideband SSB detection mode
MAN	75	Perform the manual function
PLS	78	Select the pulse detection mode
RCL n	7B	Recall memory channel n
RFG n	7E	Set the RF gain: 0 minimum, 255 maximum
RFG?	80	What is the RF gain? (RFG n) 0-255 range
RMT	81	Put the receiver in remote mode
RMT/	82	Put the receiver in local mode
RMT?	83	Is the receiver in remote mode? (RMT or RMT/)
SCN n	84	Put receiver in scan mode n = channel number
SS?	89	What is signal strength? (SS n)
STO n	8A	Perform a store n = channel number
STP n	8D	Put receiver in step mode n = channel number
STS n	90	Set status bit
STS?	92	What is the receiver status?
USB	93	Select the upper sideband SSB detection mode

In Table I, n represents a decimal number in the range of from 0 to 255. When the ASCII format is used, each digit is represented by a separate ASCII character. In the binary format the value of n is sent as a one byte binary word. For the FRQ function, f represents the frequency in MHz. Using the ASCII format, each digit and the decimal are represented by a separate ASCII character (i.e., 1034.5678). Leading and trailing zeros may be omitted. If the decimal is omitted, it is assumed to be to the right of the last digit. Using the Binary format, the value of f is sent as eight BCD digits packed into four bytes (i.e., 10 34 56 78).

For the BFO function, f represents the offset frequency of ±1.99 kHz. Using the ASCII format, an ASCII character is used to represent each digit and the decimal in the offset frequency. Negative frequency is sent 9's complement (trailing zeros may be omitted). In the

Binary format, f is sent in the same manner as the FRQ function, with negative frequency sent in 9's complement.

For the DWL function, n represents a value of from 0 to 255 which is used by the receiver to detemine the dwell time at each frequency step during the Scan and Step modes of operation. A value of n = 0 would represent the shortest dwell period (approximately 750 μsec) while a value of n = 255 would represent a dwell period of approximately 4 seconds. The Table of Minimum Dwell Time (Table II, page 6) provides an aid to determine the dwell period in microseconds for the various values of n (dwell number). Each time unit in the table is equal to 250 microseconds.

The response to an AM? mnemonic is a number from 000 to 068 which represents the level of AM Video present at the output of the receiver. Each digit represents approximately 13 mVrms of AM video. For FM?, the response is a number ranging from 000 to 100, which represents the precentage of FM modulation. Each digit represents a 1 percent increment with 100 being equal to 100% modulation and 000 equal to no modulation.

LGV? provides a number from 000 to 085, which represents the Log video level of the receiver. This number represents the signal level above the noise floor, of the receiver, with each number representing a .47 db change. The noise floor is represented by 000, with 085 representing 40 db above noise.

To set the COR level, a COR n function would be used. With this function, n represents a decimal number from 0 to 40. This number corresponds to a threshold setting from noise level (0) to approximately 40 dB above noise (40). Each interim step is equivalent to approximately a 1 dB change.

For the RFG n function, n represents a gain control number of from 0 to 255. This function provides a minimum of 80 dB of range, with 0 representing minimum gain and 255 representing maximum gain. The effect of the gain control number on gain is illustrated in the Gain Reduction Versus Control Number Graph (Figure 1, page 7). The curve shows an average of 0.5 dB per bit at a tuned frequency of 255 MHz. It should be noted that there will be a variation from this typical curve over the tuning range of the receiver. If precise accuracy is required, a separate table of control number versus gain reduction should be compiled at several

Table II. Minimum Dwell Time

Dwell Number	Time Units			Min. Dwell Time msec	Average Time msec
0 - 55			3	.75	1.50
56 - 63			4	1.00	1.75
64 - 67			5	1.25	2.00
68 - 71			6	1.50	2.25
72 - 75			7	1.75	2.50
76 - 79			8	2.00	2.75
80 - 81			9	2.25	3.00
82 - 83			10	2.50	3.25
84 - 85			11	2.75	3.50
86 - 87			12	3.00	3.75
88 - 89			13	3.25	4.00
90 - 91			14	3.50	4.25
92 - 93			15	3.75	4.50
94 - 95			16	4.00	4.75
96 - 111	(Dwell number - 96) x 1 + 17	96 =	17	4.25	5.00
		111 =	32	8.00	8.75
112 - 127	(Dwell number - 112) x 2 + 33	112 =	33	8.25	9.00
		127 =	63	15.75	16.50
128 - 143	(Dwell number - 128) x 4 + 65	128 =	65	16.25	17.00
		143 =	125	31.25	32.00
144 - 159	(Dwell number - 144) x 8 + 129	144 =	129	32.25	33.00
		159 =	249	62.25	63.00
160 - 175	(Dwell number - 160) x 16 + 257	160 =	257	64.25	65.00
		175 =	497	124.25	125.00
176 - 191	(Dwell number - 176) x 32 + 513	176 =	513	128.25	129.00
		191 =	993	248.25	249.00
192 - 207	(Dwell number - 192) x 64 + 1025	192 =	1025	256.25	257.00
		207 =	1985	496.25	497.00
208 - 223	(Dwell number - 208) x 128 + 2049	208 =	2049	512.25	513.00
		223 =	3969	992.25	993.00
224 - 239	(Dwell number - 224) x 256 + 4097	224 =	4097	1024.25	1025.00
		239 =	7937	1984.25	1985.00
240 - 255	(Dwell number - 240) x 512 + 8193	240 =	8193	2048.25	2049.00
		255 =	15873	3968.25	3969.00

NOTES

1. Dwell is input from dwell pot or dwell message as a number from 0 to 255.
2. Time units equal 250 μsec.
3. Average dwell time is approximately equal to Minimum Dwell Time + 750 μsec.

frequencies throughout the frequency range of the receiver. This should be done for each receiver.

To initiate the SCN n function, the receiver operating parameters, start frequencies and stop frequencies are sent to the receiver and stored in the appropriate memory channels using the commands illustrated in Table I. All operating parameters and the start frequency of each scan are stored in the even numbered memory channels and the stop frequencies are stored in the odd channels. The scan function is initiated with a SCN n command. When n is an even number, a single band is continuously scanned, beginning with channel n and ending at channel n + 1. When n is an odd number, all programmed bands are scanned, beginning with channel 0 and continuing to channel n. The receiver parameters for each scan band are taken from the even channels and the stop frequency is taken from the odd channels.

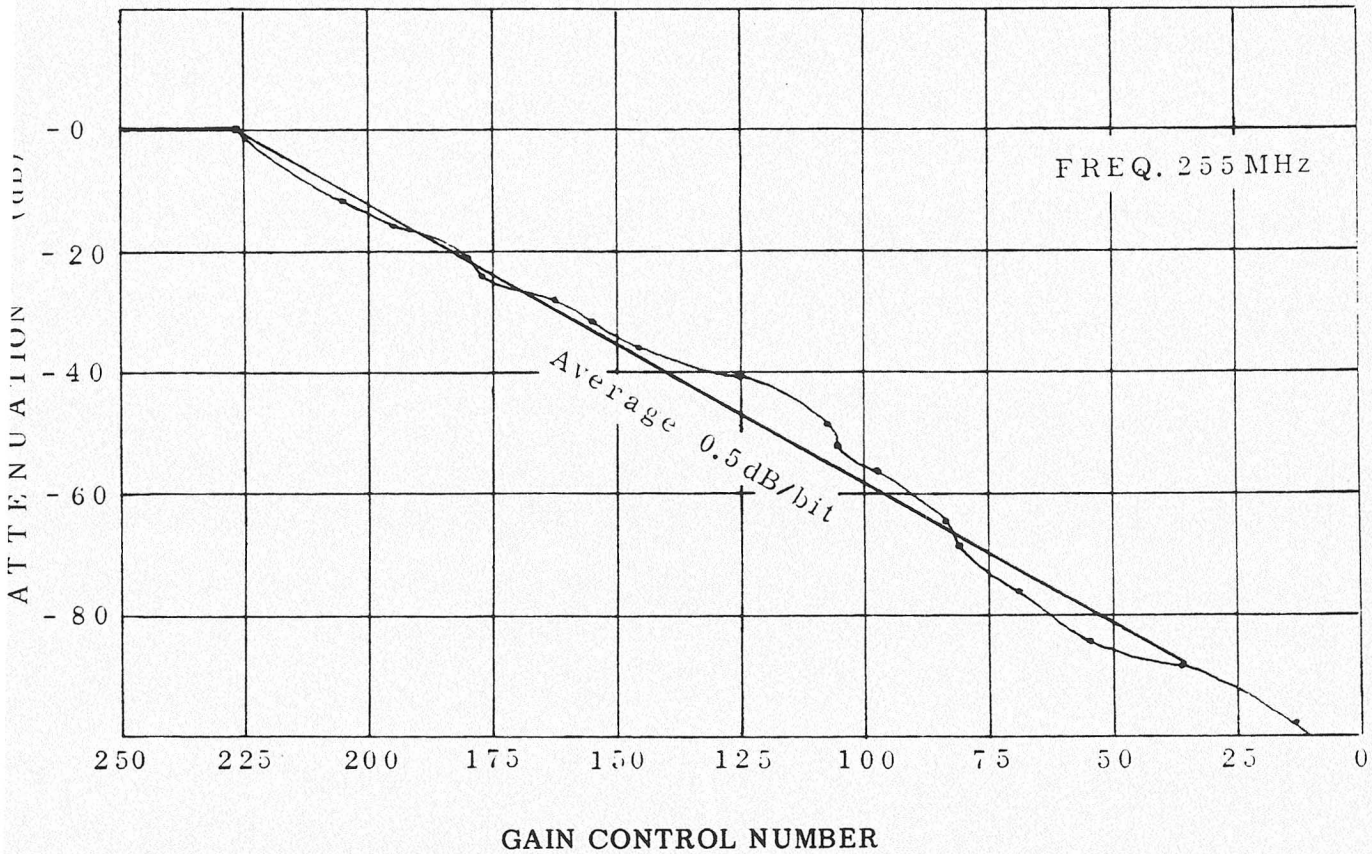

Figure 1. Gain Reduction Versus Control Number

The following is a typical example of the SCN function:

FRQ 20; BW 1; COR 5; DWL 100; AM; STO 0; FRQ 30; STO 1 (CR) (LF)

FRQ 31; BW 2; COR 4; DWL 100; FM; STO 2; FRQ 40; STO 3 (CR) (LF)

SCN 3 (CR) (LF)

The receiver will scan from 20 MHz to 30 MHz using the parameters stored in channel 0. It will then scan from 31 MHz to 40 MHz using the parameters stored in channel 2. The scan will continue until a signal is encountered or a MAN command is sent to the receiver.

SCN 2 (CR) (LF)

The receiver will scan from 31 MHz to 40 MHz using the parameters stored in channel 2. The receiver will continue scanning between channels 2 and 3 until a signal is encountered or a MAN command is sent.

The STP n function is similar to the SCN n except that each memory channel contains a complete set of receiver parameters and the receiver tunes to the discrete frequency stored in each channel. When a STP n is sent, the receiver will step to each channel containing valid memory information starting with channel 0 and continuing to channel n. This stepping sequence will continue until a signal is encountered or a MAN function is sent.

If a scanning (or stepping) receiver encounters a signal, a Service Request (IEEE-488) or a Signal Acquisition Message (RS-232) will be sent. The Signal Acquisition Message is two bytes (FE, FF hex). The controller can then be queried as to the characteristics of the encountered signal. Upon completion of the query, the receiver can be commanded to continue the scan with a SCN command or it can be placed in the manual mode using a MAN command.

The following are typical ASCII messages:

AGC/ cr lf	turn AGC function off
ANT 2 cr lf	select antenna 2
FRQ 12. 34 cr lf	set frequency to 12. 34 MHz

The corresponding messages in binary would be as follows:

46
4B 02
3C 00 12 34 00

In ASCII format the message is usually ended with a line feed (lf). The carriage return (cr) is optional. When the IEEE interface is used, the message may be ended by asserting the EOI control line with the last data byte. The binary format messages are always ended this way. When the RS-232 interface is used, binary messages are always ended with an EMS control byte (hexadecimal FF). ASCII messages may also be ended this way. For either interface, to facilitate sending several ASCII messages, these messages may be ended with a semicolon.

Many messages are queries and call for a reply from the receiver. With the IEEE interface, after such a message is sent the controller must address the receiver to talk. After sending the message the controller can talk to other receivers; however, another message should not be sent to that receiver until the reply from the last message is received. The RS-232 interface has separate send and receive circuits for each receiver. However, each message requires a response and a new message must not be sent until the response is received.

If the message was a query, the response is the reply to the query followed by EMS (FF hex). Otherwise the response is FD, FF hex. A complete ASCII sequence for a controller sending a message and receiving a response is given below. The items in parentheses are received by the controller. Control and special characters are in lower case. Underlined characters are IEEE-488 control bytes.

lad ANT 2; AGC? cr lf tad (AGC/ cr lf) unt

If a receiver encounters an error condition, a Service Request (IEEE-488) or an Error Message (RS-232) will be sent. The Error Message is FC, FF hex. The error codes are as follows:

Remote Errors

401 Buffer full (message too long)

402 Less than 2 characters in message

403 RS-232 - Framing, parity or overrun error

404 Invalid number

406 "/" or "?" not valid for this mnemonic

407 Invalid message

Scan/Step Errors

800 Start Freq > Stop Freq
810 No valid memory channels
811 Illegal to step with memory channel = 0

Lock Out

501 No room for lockout channel
502 Attempt to store into lockout channel

A status byte is available as a reply to an STS? query or as a response to a serial poll. The response is a 3 digit number, from 000 to 127, representing the binary value contained in the status byte.

The bits in the status byte have the following significance:

Bit	0	= 1	if a signal is present or when the remote interface is first initialized (cleared by STS?).
	1		is set to 1 by an STS 2 command to activate RFG with AGC on.
	2		
	3		
	4	= 1	when processing or responding to an interface message
	5	= 1	if error (cleared by ERR?)
	6	= 1	if SRQ was sent
	7	not used	
	000	= 00000000; 127 = 01111111	

Below are some response times for ASCII messages. Similar times may be expected for similar messages. For binary mode the times will be about one-fourth those listed. These times are only for the receiver and do not include any processing by the controller. In addition the latent period between commands is .5 msec. If the receiver is in scan or step mode when the message is received, these times will be significantly longer.

AFC	1.0 msec
AFC?	2.3 msec (including response)
COR 40	2.5 msec
COR?	3.8 msec (including response)
FRQ 1234.5678	5.7 msec
FRQ?	6.8 msec (including response)

After a power fail condition, the system must be reinitialized. The receiver will come up in the ASCII format. If the binary format is required, a BIN command will set the binary remote mode. Returning the receiver to the local mode of operation is accomplished using the RMT/command.

SECTION III

REPLACEMENT PARTS LIST

3.1 UNIT NUMBERING METHOD

The unit numbering method of assigning reference designations (electrical symbol numbers) has been used to identify assemblies, subassemblies (and modules) and parts. An example of the unit numbering method follows:

Subassembly Designation A1	R1 Class and No. of Item
Identify from right to left as:	First (1) resistor (R) of first (1) subassembly (A)

As shown on the main chassis schematic, components which are an integral part of the main chassis have no subassembly designation.

3.2 REFERENCE DESIGNATION PREFIX

Partial reference designations have been used on the equipment and on the illustrations in this manual. The partial reference designations consist of the class letter(s) and identifying item number. The complete reference designations may be obtained by placing the proper prefix before the partial reference designations. Reference Designation Prefixes are provided on drawings and illustrations in parentheses within the figure titles.

3.3 LIST OF MANUFACTURERS

Mfr. Code	Name and Address
00629	Eby Sales Company, Inc. 148-05 Archer Avenue Jamaica, NY 11435
00779	AMP, Incorporated P.O. Box 3608 Harrisburg, PA 17105
01121	Allen-Bradley Company 1201 South 2nd Street Milwaukee, WI 53204
01295	Texas Instruments, Inc. Semiconductor-Components Div. 13500 North Central Expressway
02114	Ferroxcube Corp. P.O. Box 359 Mt. Marion Road Saugerties, NY 12477
02735	RCA Corporation Solid State Division Route 202 Somerville, NJ 08876
04013	Taurus Corporation 1 Academy Hill Lambertville, NJ 08530
04213	Caddell-Burns Mfg. Co., Inc. 40 E. Second Street Mineola, NY 11501

Mfr. Code	Name and Address
04239	General Electric Company Chemical & Metallurgical Ventures Opn. Magnetic Mtls. Produce Sec. P.O. Box 72 Edmore, MI 49928
04713	Motorola, Incorporated Semiconductor Products Division 5005 East McDowell Road Phoenix, AZ 80058
05245	Components Corporation 2857 N. Halsted Street Chicago, IL 60657
05397	Union Carbide Corporation Materials Systems Division 11901 Madison Avenue Cleveland, OH 44101
07263	Fairchild Camera & Instr, Corp. Semiconductor Division 464 Ellis Street Mountain View, CA 94040
09353	C & K Components, Inc. 103 Morse Street Watertown, MA 02172
13103	Thermalloy Company 2021 W. Valley View Lane Dallas, TX 75234
14482	Watkins-Johnson Company 3333 Hillview Avenue Palo Alto, CA 94304
14632	Watkins-Johnson Company 700 Quince Orchard Road Gaithersburg, MD 20760
15454	Rodan Industries, Inc. 2905 Blue Star Street Anaheim, CA 92806
15542	Mini-Circuits Laboratory Div. of Scientific Comp. Corp. 2913 Quentin Road Brooklyn, NY 11229
15818	Teledyne Semiconductor 1300 Terra Bella Avenue Mountain View, CA 94040
16428	Belden Corporation P.O. Box 1101 Richmond, IN 47374
17856	Siliconix, Inc. 2201 Laurelwood Road Santa Clara, CA 95050
18324	Signetics Corporation 811 East Arques Avenue Sunnyvale, CA 94086
19505	Applied Engineering Prod. Co. Division of Samarius, Inc. 300 Seymour Avenue Derby, CT 06418
20183	General Atronics Corp. 1200 East Mermaid Lane Philadelphia, PA 19118
25088	Siemens America, Inc. 186 Wood Avenue S. Iselin, NJ 08830
25120	Piezo Technology, Inc. P.O. Box 7877 2400 Diversified Way Orlando, FL 32804
26629	Frequency Sources Inc. P.O. Box 159 North Chelmsford, MA 01863

Mfr. Code	Name and Address
26654	Varadyne Industries, Inc. 2110 Broadway Santa Monica, CA 94040
26805	Americon Microwave Industries, Inc. 87 Rumford Avenue Waltham, MA 02154
27014	National Semi-Conductor Corp. 2950 San Ysidro Way Santa Clara, CA 95051
27802	Vectron Labs., Inc. 121 Water Street Norwalk, CT 06854
27956	Relcom 3333 Hillview Avenue Palo Alto, CA 94304
28480	Hewlett-Packard Co. Corporate Headquarters 1501 Page Mill Road Palo Alto, CA 94304
28733	Ceramic Magnetics, Inc. 87 Fairfield Road Fairfield, NJ 07006
29990	American Technical Ceramics Division of Phase Industries 1 Norden Lane Huntington Station, NY 11746
31433	Union Carbide Corp. Highway 276, S.E. Greenville, SC 29606
31918	IEE/Schadow, Inc. 8081 Wallace Road Eden Prairie, MN 55343
32293	Intersil, Inc. 10900 North Tantau Avenue Cupertin, CA 95014
33095	Spectrum Control, Inc. 152 E. Main Street Fairview, PA 16415
34371	Harris Semiconductor Div. Harris-Intertype Corp. P.O. Box 883 Melbourne, FL 32901
50088	Mostek Corporation 1400 Upfield Drive Carrollton, TX 75006
50101	GHZ Devices Inc. Kennedy Drive North Chelmsford, MA 01863
52648	Plessey Memories, Inc. DBA Plessey Semiconductors 1674 McGaw Avenue Irvine, CA 92714
55153	Dielectric Laboratories Inc. 69 Albany Street Cazenovia, NY 13035
56289	Sprague Electric Co. Marshall Street North Adams, MA 01247
71279	Cambridge Thermionic Corp. 445 Concord Avenue Cambridge, MA 02138
71400	Bussman Manufacturing Division of MCGraw-Edison Co. 2536 W. University Street St. Louis, MO 63107

Mfr. Code	Name and Address
71785	TRW Electronic Components Cinch Connector Operations 1501 Morse Avenue Elk Grove Village, IL 60007
72136	Electro Motive Mfg. Co., Inc. South Park & John Streets Willimantic, CT 06226
72259	Nytronics, Inc. 10 Pelham Parkway Pelham Manor, NY 10803
72982	Erie Tech. Products, Inc. 644 West 12th Street Erie, PA 16512
73138	Beckman Instr., Inc. Helipot Division 2500 Harbor Blvd. Fullerton, CA 92634
73445	Amperex Elctrnc. Corp. 230 Duffy Avenue Hicksville, LI, NY 11802
73899	JFD Electronics Co. 15th at 62nd Street Brooklyn, NY 11219
75915	Littelfuse, Inc. 800 E Northwest Highway Des Plaines, IL 60016
76055	Mallory Controls Division P.R. Mallory and Co., Inc. P.O. Box 327 State Road 28 W Frankfort, IN 46041
80031	Electra-Midland Corp. MEPCO Division 22 Columbia Road Morristown, NJ 07960
80058	Joint Electronic Type Designation System
80103	Lambda Electronics Corp. Div. of Veeco Instruments, Inc. 515 Broad Hollow Road Melville, NY 11746
80131	Electronic Industries Assoc. 2001 Eye Street, N.W. Washington, D.C. 20006
80294	Bourns, Incorporated Instrument Division 6135 Magnolia Avenue Riverside, CA 92506
81073	Grayhill Incorporated 561 Hillgrove Avenue LaGrange, IL 60525
81349	Military Specifications
81350	Joint Army-Navy Specifications
82389	Switchcraft, Inc. 5555 North Elston Avenue Chicago, IL 60630
91293	Johanson Mfg. Company P.O. Box 329 Boonton, NJ 07005
91418	Radio Materials Company 4242 West Bryn Mawr Avenue Chicago, IL 60646

Mfr. Code	Name and Address
91984	Maida Development Co. 214 Academy Street Hampton, VA 23369
93958	Republic Electronics Corp. 176 East 7th Street Paterson, NJ 07524
95121	Quality Components, Inc. P.O. Box 113 St. Mary's, PA 15857
98291	Sealectro Corporation 225 Hoyt Mamaroneck, NY 10544
98978	Intl. Elec. Research Corp. 135 West Magnolia Blvd. Burbank, CA 91502
99800	American Precision Industries Delevan Electronics Division 270 Quaker Road East Aurora, NY 14052

3.4 PARTS LIST

The parts list which follows contains all electrical parts used in the equipment and certain mechanical parts which are subject to unusual wear or damage. When ordering replacement parts from the Watkins-Johnson Company, specify the type and serial number of the equipment and the reference designation and description of each part ordered. The list of manufacturers provided in paragraph 3.3 and the manufacturer's part number for components are included as a guide to the user of the equipment in the field. These parts may not necessarily agree with the parts installed in the equipment; however, the parts specified in this list will provide satisfactory operation of the equipment. Replacement parts may be obtained from any manufacturer as long as the physical and electrical parameters of the part selected agree with the original indicated part. In the case of components defined by a military or industrial specification, a vendor which can provide the necessary component is suggested as a convenience to the user.

NOTE

As improved semi-conductors become available, it is the policy of Watkins-Johnson to incorporate them in proprietary products. For this reason some transistors, diodes and integrated circuits installed in the equipment may not agree with those specified in the parts lists and schematic diagrams of this manual. However, the semiconductors designated in the manual may be substituted in every case with satisfactory results.

3.5 TYPE WJ-8610 MAIN CHASSIS

REF DESIG	DESCRIPTION	QTY. PER ASSY.	MANUFACTURER'S PART NO.	MFR. CODE	RECM. VENDOR
AI-1	Extender Board Assembly	2	794054-1	14632	
AI-2	Extender Board Assembly	1	794140-1	14632	
AI-3	Handle, P.C. Board	1	15689-1	14632	
AI-4	Alignment Tool	1	5284	73899	
A1	Power Distribution Assembly	1	764005-1	14632	
A2	Signal Monitor	1	794103	14632	
A3	RF/IF Motherboard	1	794084-1	14632	
A4	Synthesizer Motherboard	1	794082-1	14632	
A5	Digital Motherboard	1	794083-1	14632	
A6	Front Panel Display and Control	1	794093-1	14632	
A7	Phone Jack Assembly	1	791275-1	14632	
A8					
BT1	Battery	1	N4546	83740	
C1	Capacitor, Electrolytic, Tantalum: 27 µF, 10%, 35 V	2	196D276X9035TE4	56289	
C2	Same as C1				
C3	Capacitor, Electrolytic, Tantalum: 2.2 µF, 20%, 35 V	1	CS13BF225K	81349	
C4	Capacitor, Electrolytic, Tantalum: 1.0 µF, 20%, 35 V	1	196D105X0035HE3	56289	
C5	Capacitor, Ceramic, Feedthru: 0.05 µF, GMV, 300 V	13	54-785-005-503P	33095	
C6 Thru C13	Same as C5				
C14	Capacitor, Ceramic, Disc: 0.47 µF, 20%, 100 V	2	8131M100-651-474M	72982	
C15	Capacitor, Ceramic, Disc: 0.1 µF, 20%, 100 V	2	34475-1	14632	
C16 Thru C18	Same as C5				
C19	Same as C14				
C20	Same as C15				
C21	Same as C5				
C22	Capacitor, Ceramic, Feedthru: 5000 pF, 200 V	5	2425-001X5W0-502AA	32897	
C23 Thru C26	Same as C22				
C27	Capacitor, Electrolytic, Aluminum: 1100 µF, 20%, 28 V	1	622D113M028AB2A	56289	
C28	Capacitor, Electrolytic, Tantalum: 200 µF, 20%, 15 V	3	MTP207M015P1C	76055	
C29	Same as C28				
C30	Same as C28				
CP1	Connector, SMC (Female/Female)	1	113	19505	
CR1	Diode	2	1N1614	80131	
CR2	Same as CR1				
F1	Fuse, Cartridge: 1.5 Amp, 3AG, Slow	1	MDX1.5	71400	
F2	Fuse, Cartridge: 3/4 Amp, 3AG, Slow	1	MDL3/4	71400	

MAIN CHASSIS

REF DESIG	DESCRIPTION	QTY. PER ASSY.	MANUFACTURER'S PART NO.	MFR. CODE	RECM. VENDOR
FL1	Power Filter	1	370436-1	14632	
FL1P1	Plug, Assembly	1	370433-1	14632	
FL1P2	Plug, Assembly	1	370429-1	14632	
FL1P3	Plug, Assembly	1	370433-2	14632	
FL1P4	Plug, Assembly	1	370433-3	14632	
FL1P5	Plug, Assembly	1	370433-4	14632	
FL1P6	Plug, Assembly	1	370433-5	14632	
FL1P7	Plug, Assembly	1	370429-2	14632	
J1	Connector, Receptacle	10	225398-7	00779	
J2 Thru J8	Same as J1				
J9	Connector, Jack, SMC (RT Angle)	2	156/085	19505	
J10	Connector, Plug (RT Angle)	4	50-030-3875	98291	
J11	Same as J9				
J12	Connector, Jack, SMC (Straight)	3	153/085	19505	
J13	Same as J12				
J14	Same as J12				
J15	Same as J10				
J16	Same as J10				
J17	Not Used				
J18	Same as J10				
J19	Receptacle Assembly	1	370441-1	14632	
J20	Same as J1				
J21	Same as J1				
L1	Ferrite Choke	7	VK200-10-3B	02114	
L2 Thru L7	Same as L1				
P1	Part of W1				
P2	Part of W1				
P3	Connector, Plug	4	42236-1	00779	
P4	Connector, Plug	4	2-350804-2	00779	
P5	Same as P3				
P6	Same as P4				
P7	Same as P3				
P8	Same as P4				
P9	Plug, Assembly	1	370429-9	14632	
P10	Same as P4				
P11	Plug, Assembly	1	370429-3	14632	
P12	Plug, Assembly	1	370429-4	14632	
P13	Plug, Assembly	1	370429-5	14632	

MAIN CHASSIS

REF DESIG	DESCRIPTION	QTY. PER ASSY.	MANUFACTURER'S PART NO.	MFR. CODE	RECM. VENDOR
P14	Plug, Assembly	1	370429-6	14632	
P15	Plug, Assembly	1	370429-7	14632	
P16	Plug, Assembly	1	370429-8	14632	
P17	Same as P3				
P18	Plug, Assembly	1	370433-6	14632	
P19	Plug, Assembly	1	370433-7	14632	
P20	Connector, Plug	11	50-024-3875	98291	
P21	Not Used				
P22	Connector, Plug	3	50-328-3875	98291	
P23 Thru P26	Smae as P20				
P27	Connector, Plug	12	87499-5	00779	
P28	Same as P27				
P29	Same as P27				
P30	Plug, Assembly	1	370429-10	14632	
P31	Plug, Assembly	1	370429-11	14632	
P32	Plug, Assembly	1	370429-12	14632	
P33	Plug, Assembly	1	370429-13	14632	
P34	Plug, Assembly	1	370429-14	14632	
P35	Plug, Assembly	1	370429-15	14632	
P36	Same as P27				
P37	Plug, Assembly	1	370427-1	14632	
P38	Plug, Assembly	1	370431-1	14632	
P39	Plug, Assembly	1	370427-2	14632	
P40	Plug, Assembly	1	370427-3	14632	
P41	Plug, Assembly	1	370430-1	14632	
P42	Plug, Assembly	1	370430-2	14632	
P43	Plug, Assembly	1	370430-3	14632	
P44 Thru P49	Same as P27				
P50	Connector, Plug, SMC (Straight)	1	152/085	19505	
P51	Same as P27				
P52	Same as P20				
P53	Same as P22				
P54	Same as P22				
P55	Same as P20				
P56	Connector, Plug (Straight)	3	50-007-3875	98291	
P57	Same as P56				

MAIN CHASSIS

REF DESIG	DESCRIPTION	QTY. PER ASSY.	MANUFACTURER'S PART NO.	MFR. CODE	RECM. VENDOR
P58 Thru P60	Same as P20				
P61	Not Used				
P62	Not Used				
P63	Connector, Plug	1	87499-1	00779	
P64	Plug, Assembly	1	270695-1	14632	
P65	Not Used				
P66	Plug, Assembly	1	370434-1	14632	
P67	Plug, Assembly	1	370434-3	14632	
P68	Plug, Assembly	1	370434-2	14632	
P69	Same as P20				
P70	Same as P27				
P71	Connector, Plug	1	UG1465/U	80058	
R1	Resistor, Variable, Composition: 10 kΩ, 10%, 1 W (Log)	1	70A3N048L103A	01121	
R2	Resistor, Variable, Composition: 10 kΩ, 10%, 1 W (Linear)	1	70A3N048L103U	01121	
R3	Resistor, Variable, Composition: 10 kΩ, 10%, 1 W (Linear)	1	70A3L036L103U	01121	
R4	Not Used				
S1	Switch, Pushbutton	1	SCD18542	14632	
S2	Switch, Slide	1	11A1211	82389	
T1	Transformer	1	370378-1	14632	
U1	Voltage Regulator: +15 V, 1.5 Amp	1	LM340AKC15	27014	
U2	Voltage Regulator: -15 V, 1.5 Amp	1	LM120K15	27014	
U3	Voltage Regulator: +5 V, 5.0 Amp	2	78H05ASC	07263	
U4	Same as U3				
U5	Encoder	1	290378-1	14632	
U5R1	Resistor, Fixed, Composition: 4.7 kΩ, 5%, 1/8 W	1	RCR05G472JS	81349	
U5R2	Resistor, Fixed, Composition: 10 kΩ, 5%, 1/8 W	1	RCR05G103JS	81349	
W1	Line Cord, 3 Conductor, 6 ft.	1	17250	16428	
W2	Cable Assembly	1	370428-1	14632	
W3	Cable Assembly	1	370428-2	14632	
W4	Cable Assembly	1	370428-3	14632	
W5	Cable Assembly	1	370428-4	14632	
W6	Cable Assembly		370432-4	14632	
W7	Cable Assembly		370437-4	14632	
W8	Cable Assembly	1	370437-3	14632	
W9	Cable Assembly	1	370438-1	14632	
W10	Cable Assembly	1	370438-2	14632	
W11	Cable Assembly	1	370438-3	14632	

MAIN CHASSIS

REF DESIG	DESCRIPTION	QTY. PER ASSY.	MANUFACTURER'S PART NO.	MFR. CODE	RECM. VENDOR
W12	Cable Assembly	1	370432-1	14632	
W13	Cable Assembly	1	370432-2	14632	
W14	Cable Assembly	1	370432-3	14632	
W15	Not Used				
W16	Cable Assembly	1	370432-5	14632	
W17	Cable Assembly	1	370432-6	14632	
W18	Cable Assembly	1	370432-7	14632	
W19	Cable Assembly	1	370432-8	14632	
W20	Cable Assembly	1	370432-9	14632	
W21	Cable Assembly	1	370432-10	14632	
W22	Cable Assembly	1	370432-11	14632	
W23	Cable Assembly	1	370437-4	14632	
W24	Cable Assembly	1	370437-5	14632	
W25	Cable Assembly	1	370437-6	14632	
W26	Cable Assembly	1	370437-7	14632	
W27	Cable Assembly	1	370437-8	14632	
W28	Not Used				
W29	Cable Assembly	1	370439-1	14632	
W30	Cable Assembly	1	370432-12	14632	
W31	Cable Assembly	1	370437-10	14632	

3.5.1 TYPE 764005 POWER DISTRIBUTION REF DESIG PREFIX A1

REF DESIG	DESCRIPTION	QTY. PER ASSY.	MANUFACTURER'S PART NO.	MFR. CODE	RECM. VENDOR
C1	Capacitor, Electrolytic, Aluminum: 2200 µF, -10%, +75%, 25 V	2	39D228G025HP4	56289	
C2	Same as C1				
C3	Capacitor, Electrolytic, Aluminum: 8000 µF, -10%, +75%, 15 V	3	39D808G015JT4	56289	
C4	Same as C3				
C5	Same as C3				
CR1	Diode	4	1N4998	80131	
CR2 Thru CR4	Same as CR1				
J1	Faston Tabs	20	62073-1	00779	
J2 Thru J20	Same as J1				

3.5.2 TYPE 794103 SIGNAL MONITOR REF DESIG PREFIX A2

REF DESIG	DESCRIPTION	QTY. PER ASSY.	MANUFACTURER'S PART NO.	MFR. CODE	RECM. VENDOR
A1	IF Amplifier	1	724005	14632	
A2	Control Board	1	824002	14632	
A3	Oscillator Assembly	1	774007	14632	
A4	Focus and Intensity Control	1	794099	14632	
A5	DC/DC Converter	1	764006	14632	
C1	Capacitor, Ceramic, Disc: 1000 pF, GMV, 500 V	1	SM(1000 pF)P	91418	
P1	Connector, Plug, SMC	2	50-311-3188	98291	
P2	Connector, Plug, SMC	2	UG1465/U	80058	
P3	Same as P1				
P4	Same as P2				
R1	Resistor, Variable, Composition: 5 kΩ, 10%, 1 W Linear	1	70A1N044L502U	01121	
R2	Resistor, Fixed, Film: 26.7 Ω, 1%, 1/4 W	1	RN60D26R7F	81349	
R3	Resistor, Variable, Composition: 10 kΩ, 10%, 1 W Linear	3	70A1N048L103U	01121	
R4	Resistor, Fixed, Composition: 2.4 kΩ, 5%, 1/4 W	1	RCR07G242JS	81349	
R5	Resistor, Fixed, Composition: 2.2 kΩ, 5%, 1/4 W	2	RCR07G222JS	81349	
R6	Resistor, Fixed, Film: 2.94 kΩ, 1%, 1/4 W	1	RN60D2941F	81349	
R7	Same as R5				
R8	Same as R3				
R9	Resistor, Fixed, Composition: 82 kΩ, 5%, 1/4 W	1	RCR07G823JS	81349	
R10	Same as R3				
RT1	Thermistor 1 kΩ at 25°C	1	2D102	04239	
S1	Switch, Toggle, DPDT	2	7201-S-Y4-Z-Q-E	09353	
S2	Same as S1				
T1	Transformer	1	170218-1	14632	
V1	Tube, CRT	1	3ASP1	93332	
VR1	Diode, Zener: 5.6 V Silicone	1	1N752A	80131	
W1	Cable Assembly	1	17300-191-1	14632	
W2	Cable Assembly	1	17300-191-2	14632	
XY1A	Socket, Crystal	1	9859-2	00629	
XY1B	Connector, Plug	1	463-99-99-097	71785	

3.5.2.1 Type 724005 IF Amplifier REF DESIG PREFIX A2A1

REF DESIG	DESCRIPTION	QTY. PER ASSY.	MANUFACTURER'S PART NO.	MFR. CODE	RECM. VENDOR
A1	Input Amplifier	1	18106-2	14632	
A2	8.0 kHz IF Amplifier	1	18107-1	14632	
A3	Output Amplifier	1	15801-3	14632	
C1	Capacitor, Mica, Dipped: 33 pF, ±2%, 500 V	1	CM05ED330G03	81349	
C2	Capacitor, Ceramic, Feedthru: 470 pF, ±20%, 500 V	11	54-794-009-471M	33095	
C3	Capacitor, Variable, Glass: 1-28 pF, 1000 V	1	MC603	73899	
C4	Capacitor, Ceramic, Disc: 5000 pF, ±20%, 100 V	5	C023B101E502M	56289	
C5	Same as C4				
C6	Same as C2				
C7	Same as C4				
C8 Thru C16	Same as C2				
C17	Capacitor, Ceramic, Disc: 0.01 µF, ±20%, 200 V	1	8131A200Z5U103M	72982	
C18	Same as C4				
C19	Same as C4				
C20	Capacitor, Electrolytic, Tantalum: 100 µF, 20%, 20 V	1	196D107X0020TE4	56289	
E1	Terminal, Feedthru	3	SFU16Y	04013	
E2	Same as E1				
E3	Same as E1				
E4	Not Used				
FB1	Ferrite Bead	4	56-590-65-4A	02114	
FB2 Thru FB4	Same as FB1				
J1	Connector, Receptacle	2	10-0104-002	19505	
J2	Same as J1				
J3	Connector, Plug	1	UG1468/U	80058	
L1	Inductor	1	22295-4	14632	
L2	Coil, Fixed: 30 µH, 5%	1	1537-50	99800	
L3	Coil, Fixed: 100 µH, 10%	1	553-3635-61	71279	
R1	Resistor, Fixed, Composition: 300 Ω, 5%, 1/4 W	1	RCR07G301JS	81349	
R2	Resistor, Fixed, Composition: 18 Ω, 5%, 1/4 W	1	RCR07G180JS	81349	
R3	Resistor, Fixed, Composition: 100 Ω, 5%, 1/4 W	1	RCR07G101JS	81349	
R4	Resistor, Fixed, Composition: 2.7 Ω, 5%, 1/4 W	4	RCR07G2R7JS	81349	
R5 Thru R7	Same as R4				
R8	Resistor, Fixed, Composition: 5.1 kΩ, 5%, 1/4 W	1	RCR07G512JS	81349	

3.5.2.1.1 Part 18106-2 Input Amplifier REF DESIG PREFIX A2A1A1

REF DESIG	DESCRIPTION	QTY. PER ASSY.	MANUFACTURER'S PART NO.	MFR. CODE	RECM. VENDOR
C1	Capacitor, Mica, Dipped: 82 pF, 2%, 500 V	1	CM05ED820G03	81349	
C2	Capacitor, Mica, Dipped: 180 pF, 2%, 500 V	1	CM05FD181G03	81349	
C3	Capacitor, Ceramic, Disc: 5000 pF, 20%, 100 V	10	C023B101E502M	56289	
C4	Same as C3				
C5	Capacitor, Mica, Dipped: 51 pF, 2%, 500 V	1	CM05ED510G03	81349	
C6	Same as C3				
C7	Same as C3				
C8	Capacitor, Mica, Dipped: 12 pF, 5%, 500 V	1	CM05CD120J03	81349	
C9	Capacitor, Electrolytic, Tantalum: 1.0 µF, 10%, 35 V	1	CS13BF105K	81349	
C10	Capacitor, Ceramic, Disc: 1000 pF, GMV, 500 V	2	SM(1000 pF)P	91418	
C11	Capacitor, Mica, Dipped: 91 pF, 2%, 500 V	1	CM05FD910G03	81349	
C12	Same as C3				
C13	Same as C10				
C14	Same as C3				
C15	Capacitor, Ceramic, Tubular: 22 pF, 500 V	1	301-000C0G0-220J	72982	
C16 Thru C19	Same as C3				
C20	Capacitor, Mica, Dipped: 22 pF, 5%, 500 V	1	CM05ED220J03	81349	
C21	Capacitor, Variable, Ceramic: 5-25 pF, 100 V	1	518-000A5-25	72982	
CR1	Diode	1	1N462A	80131	
CR2	Diode	2	1N198A	80131	
CR3	Same as CR2				
L1	Coil, Variable: 0.9-1.1 µH	2	558-7107-13	71279	
L2	Coil, Fixed	1	20861-44	14632	
L3	Same as L1				
L4	Coil, Variable: 2.97-3.63 µH	1	558-7107-19	71279	
L5	Coil, Fixed: 47 µH, 5%	1	1537-60	99800	
L6	Not Used				
Q1	Transistor	1	841001-1	14632	
Q2	Transistor	1	2N930	80131	
Q3	Transistor	1	2N3478	80131	
Q4	Transistor	1	U310	17856	
R1	Resistor, Fixed, Composition: 300 Ω, 5%, 1/4 W	1	RCR07G301JS	81349	
R2	Resistor, Fixed, Composition: 4.7 kΩ, 5%, 1/4 W	1	RCR07G472JS	81349	
R3	Resistor, Fixed, Composition: 130 kΩ, 5%, 1/4 W	1	RCR07G134JS	81349	
R4	Resistor, Fixed, Composition: 10 kΩ, 5%, 1/4 W	1	RCR07G103JS	81349	
R5	Resistor, Fixed, Composition: 100 Ω, 5%, 1/4 W	2	RCR07G101JS	81349	
R6	Resistor, Fixed, Composition: 51 kΩ, 5%, 1/4 W	1	RCR07G513JS	81349	
R7	Resistor, Fixed, Composition: 24 kΩ, 5%, 1/4 W	1	RCR07G243JS	81349	
R8	Resistor, Fixed, Composition: 150 Ω, 5%, 1/4 W	3	RCR07G151JS	81349	
R9	Not Used				

REF DESIG PREFIX A2A1A1

REF DESIG	DESCRIPTION	QTY. PER ASSY.	MANUFACTURER'S PART NO.	MFR. CODE	RECM. VENDOR
R10	Resistor, Fixed, Composition: 47 Ω, 5%, 1/4 W	1	RCR07G470JS	81349	
R11	Resistor, Fixed, Composition: 47 kΩ, 5%, 1/4 W	1	RCR07G473JS	81349	
R12	Resistor, Fixed, Composition: 100 kΩ, 5%, 1/4 W	1	RCR07G104JS	81349	
R13	Resistor, Fixed, Composition: 3.9 kΩ, 5%, 1/4 W	1	RCR07G392JS	81349	
R14	Same as R8				
R15	Resistor, Fixed, Composition: 1.0 kΩ, 5%, 1/4 W	2	RCR07G102JS	81349	
R16	Same as R15				
R17	Resistor, Fixed, Composition: 39 Ω, 5%, 1/4 W	1	RCR07G390JS	81349	
R18	Same as R8				
R19	Resistor, Fixed, Composition: 16 kΩ, 5%, 1/4 W	1	RCR07G163JS	81349	
R20	Resistor, Fixed, Composition: 6.2 kΩ, 5%, 1/4 W	1	RCR07G622JS	81349	
R21	Same as R5				
R22	Resistor, Fixed, Composition: 56 Ω, 5%, 1/4 W	1	RCR07G560JS	81349	
R23	Resistor, Fixed, Composition: 1.8 kΩ, 5%, 1/4 W	2	RCR07G182JS	81349	
R24	Same as R23				
T1	Transformer	1	21428-19	14632	
U1	Mixer	1	M9A	27956	

3.5.2.1.2 Part 18107-1 8.0 kHz IF Amplifier REF DESIG PREFIX A2A1A2

REF DESIG	DESCRIPTION	QTY. PER ASSY.	MANUFACTURER'S PART NO.	MFR. CODE	RECM. VENDOR
C1	Capacitor, Ceramic, Disc: 0.01 µF, 20%, 200 V	8	8131A200Z5U103M	72982	
C2	Same as C1				
C3	Same as C1				
C4	Capacitor, Mica, Dipped: 12 pF, 5%, 500 V	2	CM04CD120J03	81349	
C5 Thru C7	Same as C1				
C8	Same as C4				
C9	Same as C1				
C10	Same as C1				
FL1	Filter, Crystal	1	92092	14632	
L1	Coil, Variable: 5.04 - 6.16 µH	2	558-7107-22	71279	
L2	Same as L1				
Q1	Transistor	2	2N3478	80131	
Q2	Same as Q1				
R1	Resistor, Fixed, Composition: 220 Ω, 5%, 1/4 W	1	RCR07G221JS	81349	
R2	Resistor, Fixed, Composition: 8.2 kΩ, 5%, 1/4 W	1	RCR07G822JS	81349	
R3	Resistor, Fixed, Composition: 2.2 kΩ, 5%, 1/4 W	2	RCR07G222JS	81349	
R4	Resistor, Fixed, Composition: 4.7 kΩ, 5%, 1/4 W	2	RCR07G472JS	81349	
R5	Resistor, Fixed, Composition: 33 Ω, 5%, 1/4 W	2	RCR07G330JS	81349	
R6	Resistor, Fixed, Composition: 470 Ω, 5%, 1/4 W	1	RCR07G471JS	81349	
R7	Resistor, Fixed, Composition: 100 Ω, 5%, 1/4 W	3	RCR07G101JS	81349	
R8	Resistor, Trimmer, Film: 100 Ω, 10%, 1/2 W	1	62PR100	73138	
R9	Same as R4				
R10	Same as R3				
R11	Same as R7				
R12	Resistor, Fixed, Composition: 1.0 kΩ, 5%, 1/4 W	1	RCR07G102JS	81349	
R13	Same as R5				
R14	Resistor, Fixed, Composition: 330 Ω, 5%, 1/4 W	2	RCR07G331JS	81349	
R15	Same as R14				
R16	Same as R7				
R17	Resistor, Fixed, Composition: 47 Ω, 5%, 1/4 W	1	RCR07G470JS	81349	
RT1	Thermistor, 1 kΩ	1	2D102	04239	

3.5.2.1.3 Part 15801-3 Output Amplifier REF DESIG PREFIX A2A1A3

REF DESIG	DESCRIPTION	QTY. PER ASSY.	MANUFACTURER'S PART NO.	MFR. CODE	RECM. VENDOR
C1	Capacitor, Electrolytic, Tantalum: 22 µF, 20%, 15 V	4	196D226X0015KE3	56289	
C2	Capacitor, Mica, Dipped: 470 pF, 5%, 500 V	1	DM15-471J	72136	
C3	Capacitor, Ceramic, Disc: 1000 pF, GMV, 500 V	5	SM(1000 pF)P	91418	
C4	Capacitor, Ceramic, Disc: 5000 pF, 20%, 1000 V	4	C023B101E502M	56289	
C5 Thru C7	Same as C3				
C8	Same as C4				
C9	Capacitor, Mica, Dipped: 56 pF, 2%, 500 V	1	CM05ED560G03	81349	
C10	Capacitor, Mica, Dipped: 270 pF, 2%, 500 V	1	CM05FD271G03	81349	
C11	Same as C4				
C12	Capacitor, Ceramic, Disc: 0.1 µF, 20%, 100 V	4	8131M100-651-104M	72982	
C13	Same as C12				
C14	Same as C12				
C15	Capacitor, Ceramic, Disc: 0.01 µF, 20%, 200 V	3	8131A200Z5U103M	72982	
C16	Same as C1				
C17	Same as C12				
C18	Same as C15				
C19	Same as C1				
C20	Same as C15				
C21	Capacitor, Mica, Dipped: 33 pF, 2%, 500 V	1	CM05FD330G03	81349	
C22	Capacitor, Mica, Dipped: 24 pF, 5%, 500 V	1	CM05ED240J03	81349	
C23	Same as C3				
C24	Same as C4				
C25	Capacitor, Mica, Dipped: 15 pF, 5%, 500 V	1	CM05CD150J03	81349	
C26	Same as C1				
C27	Capacitor, Fixed, Plastic: 3300 pF, 10%, 100 V	1	WMF1033	14655	
C28	Capacitor, Plastic, Tubular: 0.022 µF, 5%, 100 V	1	663UW223-5-1W	84411	
CR1	Diode	5	1N462A	80131	
CR2 Thru CR5	Same as CR1				
CR6	Diode	2	1N4449	80131	
CR7	Same as CR6				
CR8	Diode	2	5082-2800	28480	
CR9	Same as CR8				
L1	Coil, Variable: 2.97 - 3.63 µH	1	558-7107-19	71279	
L2	Coil, Variable: 5.04 - 6.16 µH	1	558-7107-22	71279	
Q1	Transistor	2	3N187	02735	
Q2	Same as Q1				
R1	Not Used				
R2	Resistor, Fixed, Composition: 120 kΩ, 5%, 1/4 W	2	RCR07G124JS	81349	

REF DESIG PREFIX A2A1A3

REF DESIG	DESCRIPTION	QTY. PER ASSY.	MANUFACTURER'S PART NO.	MFR. CODE	RECM. VENDOR
R3	Resistor, Fixed, Composition: 33 kΩ, 5%, 1/4 W	2	RCR07G333JS	81349	
R4	Resistor, Fixed, Composition: 47 kΩ, 5%, 1/4 W	3	RCR07G472JS	81349	
R5	Resistor, Fixed, Composition: 100 kΩ, 5%, 1/4 W	5	RCR07G104JS	81349	
R6	Resistor, Fixed, Composition: 10 kΩ, 5%, 1/4 W	6	RCR07G103JS	81349	
R7	Resistor, Fixed, Composition: 10 Ω, 5%, 1/4 W	2	RCR07G100JS	81349	
R8	Resistor, Fixed, Composition: 620 Ω, 5%, 1/4 W	1	RCR07G621JS	81349	
R9	Resistor, Fixed, Composition: 330 Ω, 5%, 1/4 W	2	RCR07G331JS	81349	
R10	Same as R7				
R11	Same as R2				
R12	Same as R6				
R13	Resistor, Fixed, Composition: 68 kΩ, 5%, 1/4 W	1	RCR07G683JS	81349	
R14	Same as R3				
R15	Same as R4				
R16	Resistor, Fixed, Composition: 100 Ω, 5%, 1/4 W	3	RCR07G101JS	81349	
R17	Same as R9				
R18	Resistor, Fixed, Composition: 2.7 kΩ, 5%, 1/4 W	2	RCR07G272JS	81349	
R19	Same as R16				
R20	Resistor, Fixed, Composition: 47 Ω, 5%, 1/4 W	3	RCR07G470JS	81349	
R21	Same as R6				
R22	Resistor, Fixed, Composition: 6.2 kΩ, 5%, 1/4 W	1	RCR07G622JS	81349	
R23	Same as R18				
R24	Resistor, Trimmer, Film: 500 Ω, 10%, 1/2 W	2	62PR500	73138	
R25	Same as R24				
R26	Same as R20				
R27	Resistor, Fixed, Composition: 1.2 kΩ, 5%, 1/4 W	1	RCR07G122JS	81349	
R28	Resistor, Trimmer, Film: 20 kΩ, 10%, 1/2 W	1	62PR20K	73138	
R29	Resistor, Fixed, Composition: 1.0 MΩ, 5%, 1/4 W	2	RCR07G105JS	81349	
R30	Resistor, Fixed, Composition: 2.7 Ω, 5%, 1/4 W	3	RCR07G270JS	81349	
R31	Same as R6				
R32	Same as R16				
R33	Resistor, Fixed, Composition: 5.1 kΩ, 5%, 1/4 W	3	RCR07G512JS	81349	
R34	Same as R6				
R35	Same as R33				
R36	Same as R20				
R37	Same as R5				
R38	Same as R30				
R39	Same as R29				
R40	Same as R6				
R41	Same as R5				
R42	Same as R5				
R43	Same as R30				

REF DESIG PREFIX A2A1A3

REF DESIG	DESCRIPTION	QTY. PER ASSY.	MANUFACTURER'S PART NO.	MFR. CODE	RECM. VENDOR
R44	Same as R5				
R45	Same as R33				
R46	Resistor, Fixed, Composition: 680 Ω, 5%, 1/4 W	1	RCR07G681JS	81349	
R47	Resistor, Trimmer, Film: 1 kΩ, 10%, 1/2 W	1	62PR1K	73138	
R48	Same as R4				
U1	Integrated Circuit	1	MC1550G	04713	
U2	Integrated Circuit	2	741HC	07263	
U3	Same as U2				

3.5.2.2 Type 824002 Control Board REF DESIG PREFIX A2A2

REF DESIG	DESCRIPTION	QTY. PER ASSY.	MANUFACTURER'S PART NO.	MFR. CODE	RECM. VENDOR
C1	Capacitor, Electrolytic, Tantalum: 1.0 µF, ±10%, 35 V	1	CS13BF105K	81349	
C2	Capacitor, Ceramic, Disc: 0.1 µF, ±20%, 100 V	6	8131M100-651-104M	72982	
C3 Thru C7	Same as C2				
CR1	Diode	4	1N462A	80131	
CR2 Thru CR4	Same as CR1				
Q1	Transistor	1	2N2646	80131	
Q2	Transistor	1	2N3251	80131	
Q3	Transistor	4	2N3440	80131	
Q4	Same as Q3				
Q5	Transistor	1	2N929	80131	
Q6	Transistor	2	2N2222A	80131	
Q7	Same as Q3				
Q8	Same as Q3				
Q9	Same as Q6				
Q10	Transistor	1	U1899E	15818	
R1	Resistor, Fixed, Composition: 680 Ω, 5%, 1/4 W	1	RCR07G681JS	81349	
R2	Resistor, Fixed, Composition: 2.2 kΩ, 5%, 1/4 W	1	RCR07G222JS	81349	
R3	Resistor, Fixed, Composition: 22 kΩ, 5%, 1/4 W	1	RCR07G223JS	81349	
R4*	Resistor, Fixed, Composition: 5.1 kΩ, 5%, 1/4 W	1	RCR07G512JS	81349	
R5	Resistor, Fixed, Composition: 120 Ω, 5%, 1/4 W	1	RCR07G121JS	81349	
R6	Resistor, Trimmer, Film: 1 kΩ, 10%, 1/2 W	2	62PAR1K	73138	
R7	Resistor, Fixed, Composition: 1.0 kΩ, 5%, 1/4 W	2	RCR07G102JS	81349	
R8	Resistor, Fixed, Composition: 47 kΩ, 5%, 1/4 W	5	RCR07G473JS	81349	
R9	Resistor, Trimmer, Film: 100 kΩ, 10%, 1/2 W	2	62PAR100K	73138	
R10	Same as R8				
R11	Resistor, Fixed, Composition: 10 kΩ, 5%, 1/4 W	3	RCR07G103JS	81349	
R12	Same as R8				
R13	Same as R9				
R14	Resistor, Fixed, Composition: 47 Ω, 5%, 1/4 W	1	RCR07G470JS	81349	
R15	Resistor, Fixed, Composition: 51 kΩ, 5%, 1/4 W	1	RCR07G513JS	81349	
R16	Resistor, Fixed, Composition: 180 kΩ, 5%, 1/4 W	1	RCR07G184JS	81349	
R17	Resistor, Fixed, Composition: 220 kΩ, 5%, 1/4 W	4	RCR07G224JS	81349	
R18	Resistor, Fixed, Composition: 6.8 kΩ, 5%, 1/4 W	2	RCR07G682JS	81349	
R19	Resistor, Fixed, Composition: 4.7 kΩ, 5%, 1/4 W	3	RCR07G472JS	81349	
R20	Same as R11				
R21	Same as R19				
	*Nominal Value - Final Value Factory Selected.				

REF DESIG PREFIX A2A2

REF DESIG	DESCRIPTION	QTY. PER ASSY.	MANUFACTURER'S PART NO.	MFR. CODE	RECM. VENDOR
R22	Same as R17				
R23	Same as R18				
R24	Same as R8				
R25	Resistor, Variable, Film: 50 kΩ, 10%, 1/2 W	1	62PAR50K	73138	
R26	Same as R8				
R27	Same as R6				
R28	Resistor, Fixed, Composition: 220 Ω, 5%, 1/4 W	2	RCR07G221JS	81349	
R29	Resistor, Fixed, Composition: 3.0 MΩ, 5%, 1/4 W	2	RCR07G305JS	81349	
R30	Resistor, Fixed, Composition: 15 kΩ, 5%, 1/4 W	2	RCR07G153JS	81349	
R31	Resistor, Fixed, Composition: 2.0 kΩ, 5%, 1/4 W	1	RCR07G202JS	81349	
R32	Same as R17				
R33	Resistor, Fixed, Composition: 24 kΩ, 5%, 1/4 W	2	RCR07G243JS	81349	
R34	Resistor, Variable, Film: 500 Ω, 10%, 1/2 W	1	62PAR500	73138	
R35	Resistor, Fixed, Composition: 12 kΩ, 5%, 1/4 W	1	RCR07G123JS	81349	
R36	Same as R17				
R37	Same as R33				
R38	Resistor, Fixed, Composition: 1.8 kΩ, 5%, 1/4 W	1	RCR07G182JS	81349	
R39	Same as R30				
R40	Same as R29				
R41	Same as R28				
R42	Same as R7				
R43	Resistor, Fixed, Composition: 47.5 kΩ, 1%, 1/10 W	3	RN55C4752F	81349	
R44	Same as R43				
R45	Resistor, Fixed, Composition: 100 kΩ, 5%, 1/4 W	1	RCR07G104JS	81349	
R46	Same as R43				
R47	Same as R11				
R48	Resistor, Trimmer, Film: 20 kΩ, 10%, 1/2 W	1	62PAR20K	73138	
R49	Resistor, Fixed, Composition: 8.2 kΩ, 5%, 1/4 W	1	RCR07G822JS	81349	
R50	Resistor, Fixed, Composition: 1.0 MΩ, 5%, 1/4 W	2	RCR07G105JS	81349	
R51	Same as R50				
R52	Resistor, Trimmer, Film: 1 MΩ, 10%, 1/2 W	1	62PAR1M	73138	
R53	Same as R19				
R54	Resistor, Variable, Film: 2 kΩ, 10%, 1/2 W	1	62PAR2K	73138	
U1	Integrated Circuit	2	741HC	07263	
U2	Same as U1				

3.5.2.3 Type 774007 Oscillator Assembly REF DESIG PREFIX A2A3

REF DESIG	DESCRIPTION	QTY. PER ASSY.	MANUFACTURER'S PART NO.	MFR. CODE	RECM. VENDOR
A1	Sweep Oscillators	1	15799-3	14632	
A2	Reference Marker	1	270521	14632	
C1	Capacitor, Ceramic, Disc: 5000 pF, ±20%, 100 V	5	C023B101E502M	56289	
C2	Capacitor, Ceramic, Feedthru: 470 pF, ±20%, 500 V	5	54-794-009-471M	33095	
C3 Thru C6	Same as C2				
C7	Capacitor, Electrolytic, Tantalum: 27 µF, ±10%, 35 V	1	196D276X9035MA3	56289	
C8 Thru C11	Same as C1				
C12	Capacitor, Ceramic, Feed-thru: 1000 pF, GMV, 500 V	1	54-794-009-102W	33095	
C13	Capacitor, Mica, Dipped: 30 pF, 2%, 500 V	1	CM04ED300G03	81349	
FB1	Ferrite Bead	5	56-590-65-4A	02114	
FB2 Thru FB5	Same as FB1				
J1	Connector, Receptacle	3	10-0104-002	19505	
J2	Same as J1				
J3	Same as J1				
L1	Coil, Fixed: 62 µH, 5%	1	1537-66	99800	
L2	Coil, Fixed: 30 µH, 5%	4	1537-50	99800	
L3 Thru L5	Same as L2				

3.5.2.3.1 Part 15799-3 Sweep Oscillator Assembly REF DESIG PREFIX A2A3A1

REF DESIG	DESCRIPTION	QTY. PER ASSY.	MANUFACTURER'S PART NO.	MFR. CODE	RECM. VENDOR
C1	Capacitor, Ceramic, Disc: 5000 pF, 20%, 100 V	10	C023B101E502M	56289	
C2	Same as C1				
C3	Capacitor, Mica, Dipped: 22 pF, 5%, 500 V	2	CM05ED220J03	81349	
C4	Same as C3				
C5	Capacitor, Ceramic, Tubular: 6.8 pF, ±0.25 pF, 500 V	1	301-000C0H0-689C	72982	
C6	Same as C1				
C7	Capacitor, Mica, Dipped: 30 pF, 2%, 500 V	1	CM05ED300G03	81349	
C8	Capacitor, Mica, Dipped: 430 pF, 5%, 500 V	1	DM15-431J	72136	
C9	Same as C1				
C10	Capacitor, Ceramic, Disc: 0.1 µF, 20%, 100 V	1	8131M100-651-104M	72982	
C11	Same as C1				
C12	Same as C1				
C13	Capacitor, Mica, Dipped: 47 pF, 2%, 500 V	1	CM05ED470G03	81349	
C14	Capacitor, Variable, Ceramic: 2-8 pF, 350 V	1	538-011A2-8	72982	
C15	Same as C1				
C16	Capacitor, Variable, Ceramic: 2.5-11 pF, 350 V	1	538-011B2.5-11	72982	
C17 Thru C19	Same as C1				
CR1	Diode, Varicap	1	BB109-YELLOW	25088	
L1	Coil	1	20681-180	14632	
L2	Inductor: 4.0 µH, 10%	2	1131-41	14632	
L3	Same as L2				
Q1	Transistor	1	2N2857	80131	
Q2	Transistor	2	2N3478	80131	
Q3	Same as Q2				
R1	Resistor, Fixed, Film: 20 Ω, 1%, 1/4 W	2	RN60D20R0F	81349	
R2	Resistor, Fixed, Film: 4.22 kΩ, 1%, 1/4 W	1	RN60D4221F	81349	
R3	Resistor, Fixed, Film: 619 Ω, 1%, 1/4 W	1	RN60D6190F	81349	
R4	Resistor, Fixed, Film: 47.5 kΩ, 1%, 1/4 W	1	RN60D4752F	81349	
R5	Resistor, Fixed, Film: 51.1 Ω, 1%, 1/4 W	5	RN60D51R1F	81349	
R6	Resistor, Fixed, Film: 1.82 kΩ, 1%, 1/4 W	1	RN60D1821F	81349	
R7	Resistor, Fixed, Film: 8.45 kΩ, 1%, 1/4 W	1	RN60D8451F	81349	
R8	Resistor, Fixed, Film: 56.2 kΩ, 1%, 1/4 W	1	RN60D5622F	81349	
R9 Thru R11	Same as R5				
R12	Resistor, Fixed, Film: 15.0 kΩ, 1%, 1/4 W	1	RN60D1502F	81349	
R13	Resistor, Fixed, Film: 100 Ω, 1%, 1/4 W	1	RN60D1000F	81349	
R14	Same as R5				
R15	Same as R1				
R16	Resistor, Fixed, Film: 3.57 kΩ, 1%, 1/4 W	1	RN55C3571F	81349	
T1	Coil	1	21428-62	14632	

3.5.2.3.2 Part 270521 Reference Marker Assembly REF DESIG PREFIX A2A3A2

REF DESIG	DESCRIPTION	QTY. PER ASSY.	MANUFACTURER'S PART NO.	MFR. CODE	RECM. VENDOR
C1	Not Used				
C2	Capacitor, Ceramic, Disc: 1000 pF, GMV, 500 V	1	SM(1000 pF)P	91418	
CR1	Diode	2	MPN3401	04713	
CR2	Same as CR1				
R1	Resistor, Fixed, Composition: 51 Ω, 5%, 1/4 W	2	RCR07G510JS	81349	
R2	Resistor, Fixed, Composition: 3 kΩ, 5%, 1/4 W	1	RCR07G302JS	81349	
R3	Resistor, Fixed, Composition: 1 kΩ, 5%, 1/4 W	1	RCR07G102JS	81349	
R4	Same as R1				
Y1	Crystal, Quartz	1	96402-1	14632	

3.5.2.4 Type 794099 Focus and Intensity Control REF DESIG PREFIX A2A4

REF DESIG	DESCRIPTION	QTY. PER ASSY.	MANUFACTURER'S PART NO.	MFR. CODE	RECM. VENDOR
C1	Capacitor, Ceramic, Disc: 0.05 µF, ±20%, 100 V	1	29C212A7	56289	
E1	Terminal	4	140-1941-02-01	71279	
E2	Same as E1				
E3	Same as E1				
E4	Same as E1				
R1	Resistor, Fixed, Composition: 100 kΩ, 5%, 1/4 W	1	RCR07G104JS	81349	
R2	Resistor, Variable, Composition: 500 kΩ, 10%, 1 W	1	72M1N048S504U	01121	
R3	Resistor, Fixed, Composition: 3.3 MΩ, 5%, 1/2 W	1	RCR20G335JS	81349	
R4	Resistor, Variable, Composition: 2.5 MΩ, 10%, 1 W	1	72M1N048S255U	01121	
R5	Resistor, Fixed, Composition: 3.9 MΩ, 5%, 1/2 W	1	RCR20G395JS	81349	
R6	Resistor, Fixed, Composition: 4.7 MΩ, 5%, 1/2 W	1	RCR20G475JS	81349	

3.5.2.5 Type 764006 DC/DC Converter REF DESIG PREFIX A2A5

REF DESIG	DESCRIPTION	QTY. PER ASSY.	MANUFACTURER'S PART NO.	MFR. CODE	RECM. VENDOR
A1	DC/DC Converter	1	16533	14632	

3.5.2.5.1 Part 16533 DC-DC Converter REF DESIG PREFIX A2A5A1

REF DESIG	DESCRIPTION	QTY. PER ASSY.	MANUFACTURER'S PART NO.	MFR. CODE	RECM. VENDOR
C1	Capacitor, Electrolytic, Tantalum: 45 µF, 20%, 30 V	2	MTP456M030P1B	76055	
C2	Capacitor, Ceramic, Disc: 0.1 µF, -20+80, 25 V	1	DFJ3	73899	
C3	Same as C1				
C4	Capacitor, Ceramic, Disc: 0.01 µF, GMV, 2000 V	3	2KV.01UFP	91418	
C5	Same as C4				
C6	Same as C4				
C7	Capacitor, Mylar, Dipped: 0.22 µF, 20%, 400 V	1	B32234B6224M	25088	
C8	Capacitor, Ceramic, Disc: 0.01 µF, 20%, 200 V	2	8131A200Z5U103M	72982	
C9	Same as C8				
CR1	Diode	1	1N4446	80131	
CR2	Diode	2	M20	14099	
CR3	Same as CR2				
CR4	Diode	2	1N458A	80131	
CR5	Same as CR4				
CR6	Diode	4	1N4003	80131	
CR7 Thru CR9	Same as CR6				
CR10	Diode	2	1N4004	80131	
CR11	Same as CR10				
Q1	Transistor	2	2N2102	80131	
Q2	Same as Q1				
R1	Resistor, Fixed, Composition: 10 Ω, 5%, 1/4 W	2	RCR07G100JS	81349	
R2	Same as R1				
R3	Resistor, Fixed, Composition: 22 kΩ, 5%, 1/4 W	1	RCR07G223JS	81349	
R4	Resistor, Fixed, Composition: 1.0 kΩ, 5%, 1/4 W	2	RCR07G102JS	81349	
R5	Same as R4				
R6	Resistor, Fixed, Composition: 100 kΩ, 5%, 1/4 W	1	RCR07G104JS	81349	
R7	Resistor, Fixed, Composition: 10 MΩ, 5%, 1/4 W	1	RCR07G106JS	81349	
T1	Transformer	1	16559	14632	

3.5.3 TYPE 794084 RF/IF MOTHER BOARD REF DESIG PREFIX A3

REF DESIG	DESCRIPTION	QTY. PER ASSY.	MANUFACTURER'S PART NO.	MFR. CODE	RECM. VENDOR
A1	UHF Preselector	1	794111	14632	
A2	UHF Preamplifier	1	794114	14632	
A3	High Band Preselector	1	794094	14632	
A4	Low Band Preselector	1	794095	14632	
A5	VHF Preamplifier	1	794097	14632	
A6	1st Converter	1	794096	14632	
A7	2nd Converter	1	714006	14632	
A8	AGC Assembly	1	784001	14632	
A9	IF Amplifier No. 1	1		14632	
A10	IF Amplifier No. 2	1		14632	
A11	IF Amplifier No. 3	1		14632	
A12	IF Amplifier No. 4	1		14632	
A13	Video/Audio/Cor	1	794112	14632	
A14	IF Output	1	724009	14632	
A15	FM Demodulator No. 1	1		14632	
A16	FM Demodulator No. 2	1		14632	
A17	FM Demodulator No. 3	1		14632	
A18	FM Demodulator No. 4	1		14632	
A19	Spare Option	1		14632	
A20	Spare Option	1		14632	
C1	Capacitor, Ceramic, Disc; 4700 pF, 20%, 50 V	29	8121-050-651-472M	72982	
C2 Thru C29	Same as C1				
C30	Capacitor, Ceramic, Disc: 0.01 µF, 20%, 50 V	7	34453-1	14632	
C31	Same as C30				
C32	Same as C30				
C33	Capacitor, Electrolytic, Tantalum: 1 µF, 20%, 35 V	4	196D105X0035HE3	56289	
C34 Thru C36	Same as C33				
C37	Capacitor, Electrolytic, Tantalum: 4.7 µF, 20%, 35 V	4	196D475X0035JE3	56289	
C38 Thru C40	Same as C37				
C41	Same as C30				
C42	Capacitor, Electrolytic, Tantalum: 220 µF, ±20%, 10 V	1	196D227X0010TE4	56289	
C43	Same as C30				
C44	Same as C30				
J1	Combination, Post, Feedthru: 6 positions	2	270618-2	14632	
J2	Same as J1				
L1	Coil, Fixed: 18 µH	5	1537-42	99800	

REF DESIG PREFIX A3

REF DESIG	DESCRIPTION	QTY. PER ASSY.	MANUFACTURER'S PART NO.	MFR. CODE	RECM. VENDOR
L2 Thru L5	Same as L1				
P1	Flex-cable	1	88524-1	00779	
P2	Connector, Right Angle, SMC	10	50-311-3188	98291	
P3 Thru P11	Same as P2				
P12	Not Used				
P13	Not Used				
P14	Connector, Plug	18	87499-5	00779	
P15 Thru P31	Same as P14				
Q1	Transistor	1	2N4921	80131	
R1	Resistor, Fixed, Composition: 1 kΩ, 5%, 1/4 W	3	RCR07G102JS	81349	
R2	Same as R1				
R3	Not Used				
R4	Resistor, Fixed, Composition: 470 Ω, 5%, 1/4 W	1	RCR07G471JS	81349	
R5	Resistor, Fixed, Composition: 100 Ω, 5%, 1/4 W	1	RCR07G101JS	81349	
R6	Same as R1				
U1	Voltage Regulator	1	7805UC	07263	
U2	Integrated Circuit	1	867442	14632	
U3	Integrated Circuit	3	LM324N	27014	
U4	Same as U3				
U5	Same as U3				
VR1	Voltage Regulator: 5.6 V	1	1N752A	80131	
VR2	Diode, Zener: 33 V	2	1N746A	80131	
VR3	Same as VR2				
W1	Cable Assembly	1	17300-188-7	14632	
W2	Cable Assembly	1	17300-188-8	14632	
W3	Cable Assembly	1	17300-188-9	14632	
W4	Cable Assembly	1	17300-188-10	14632	
W5	Cable Assembly	1	17300-188-11	14632	
W6	Not Used				
W7	Cable Assembly	1	370395-3	14632	
W8	Cable Assembly	1	370395-4	14632	
W9	Cable Assembly	1	370395-5	14632	
W10	Cable Assembly	1	370395-6	14632	
W11	Cable Assembly	1	370395-7	14632	
W12	Cable Assembly	1	370395-8	14632	
W13	Cable Assembly	1	370395-9	14632	
W14	Cable Assembly	1	370395-10	14632	

REF DESIG PREFIX A3

REF DESIG	DESCRIPTION	QTY. PER ASSY.	MANUFACTURER'S PART NO.	MFR. CODE	RECM. VENDOR
W15	Cable Assembly	1	370395-11	14632	
XA1	Housing	12	117798-3	00779	
XA2 Thru XA8	Same as XA1				
XA9	Housing	8	1-117798-6	00779	
XA10 Thru XA12	Same as XA9				
XA13	Same as XA1				
XA14	Same as XA1				
XA15 Thru XA18	Same as XA9				
XA19	Same as XA1				
XA20	Same as XA1				

3.5.3.1 Type 794094-1 VHF High Band Preselector REF DESIG PREFIX A3A3

REF DESIG	DESCRIPTION	QTY. PER ASSY.	MANUFACTURER'S PART NO.	MFR. CODE	RECM. VENDOR
C1	Capacitor, Ceramic, Disc: 0.1 µF, ±20%, 100 V	6	34475-1	14632	
C2	Capacitor, Ceramic, Chip: 1000 pF, ±10%, 50 V	10	M17CG102K50T	28733	
C3	Same as C2				
C4	Same as C1				
C5	Same as C2				
C6	Same as C2				
C7	Capacitor, Ceramic, Tubular: 1.5 pF, ±.25 pF, 500 V	4	301-000C0K0-159C	72982	
C8	Same as C7				
C9	Capacitor, Ceramic, Chip: 200 pF, ±10%, 300 V	2	ATC100B201KP300	29990	
C10	Capacitor, Variable, Air: .8-10 pF, 250 V	6	5202	91293	
C11	Same as C10				
C12	Same as C10				
C13	Same as C9				
C14	Same as C2				
C15	Same as C2				
C16	Same as C10				
C17	Same as C7				
C18	Same as C10				
C19	Same as C7				
C20	Same as C10				
C21	Same as C2				
C22	Same as C2				
C23	Not Used				
C24	Capacitor, Ceramic, Disc: 3.3 pF, ±25 pF, 100 V	8	8101-100C0J0-339C	72982	
C25	Not Used				
C26	Capacitor, Ceramic, Disc: 1.5 pF, ±0.1 pF, 100 V	2	8101-100C0K0-159B	72982	
C27	Capacitor, Ceramic, Disc: 2.2 pF, ±0.25 pF, 100 V	8	8101-100C0J0-229C	72982	
C28	Same as C26				
C29	Same as C27				
C30	Not Used				
C31	Not Used				
C32	Same as C24				
C33	Not Used				
C34	Not Used				
C35	Same as C27				
C36	Capacitor, Variable, Ceramic: 2-5 pF, 100 V	4	518-000A2-5	72982	
C37	Capacitor, Ceramic, Disc: 2.7 pF, ±0.25 pF, 100 V	6	8101-100C0J0-279C	72982	
C38	Not Used				
C39	Not Used				
C40	Same as C37				
C41	Same as C36				

REF DESIG PREFIX A3A3

REF DESIG	DESCRIPTION	QTY. PER ASSY.	MANUFACTURER'S PART NO.	MFR. CODE	RECM. VENDOR
C42	Same as C27				
C43	Capacitor, Ceramic, Chip: 0.056 µF, GMV, 50 V	2	C2225C563P5XAH	05397	
C44	Same as C2				
C45	Capacitor, Ceramic, Disc: 1.8 pF, ±0.1 pF, 100 V	4	8101-100C0K0-189B	72982	
C46	Same as C24				
C47	Same as C24				
C48	Same as C37				
C49	Same as C24				
C50	Same as C37				
C51	Same as C24				
C52	Same as C24				
C53	Same as C45				
C54	Same as C24				
C55	Same as C2				
C56	Same as C45				
C57	Same as C27				
C58	Same as C36				
C59	Same as C37				
C60	Same as C27				
C61	Same as C27				
C62	Same as C37				
C63	Same as C36				
C64	Same as C27				
C65	Same as C45				
C66	Same as C43				
C67 Thru C70	Same as C1				
C71	Capacitor, Ceramic, Disc: 1000 pF, GMV, 500 V	4	B-GP1000PFP	91418	
C72 Thru C74	Same as C71				
CR1	Diode	10	5082-3080	28480	
CR2	Same as CR1				
CR3	Diode	10	MPN3401	04713	
CR4	Same as CR3				
CR5	Same as CR3				
CR6	Same as CR1				
CR7	Same as CR1				
CR8	Same as CR3				
CR9	Same as CR3				
CR10	Same as CR1				

REF DESIG PREFIX A3A3

REF DESIG	DESCRIPTION	QTY. PER ASSY.	MANUFACTURER'S PART NO.	MFR. CODE	RECM. VENDOR
CR11	Same as CR1				
CR12	Same as CR3				
CR13	Same as CR3				
CR14	Same as CR1				
CR15	Same as CR1				
CR16	Same as CR3				
CR17	Same as CR3				
CR18	Same as CR1				
CR19	Same as CR1				
CR20	Same as CR3				
J1	Connector, Receptacle, SMC	4	109	19505	
J2 Thru J4	Same as J1				
L1	Coil, Fixed: 18 µH, 10%	2	1025-50	99800	
L2	Same as L1				
L3	Coil, Fixed	2	16209-11	14632	
L4	Same as L3				
L5	Coil, Fixed: 0.33 µH, 10%	2	1025-08	99800	
L6	Coil, Fixed: .056 µH	1	22292-134	14632	
L7	Coil, Fixed	1	22292-136	14632	
L8	Same as L5				
L9	Coil, Fixed	1	22292-135	14632	
L10	Coil, Fixed: 0.56 µH, 10%	2	1025-14	99800	
L11	Coil, Fixed	1	22292-131	14632	
L12	Coil, Fixed	1	22292-133	14632	
L13	Same as L10				
L14	Coil, Fixed	1	22292-132	14632	
L15	Coil, Fixed: 1.2 µH, 10%	2	1025-22	99800	
L16	Coil, Variable	2	34959-2	14632	
L17	Coil, Variable	2	34959-4	14632	
L18	Coil, Variable	1	34959-5	14632	
L19	Same as L17				
L20	Same as L16				
L21	Same as L15				
L22	Coil, Fixed: 1.8 µH, 10%	2	1025-26	99800	
L23	Coil, Variable	2	6813	04213	
L24	Coil, Variable	2	34959-3	14632	
L25	Coil, Variable	1	6814	04213	
L26	Same as L24				
L27	Same as L23				
L28	Same as L22				

REF DESIG PREFIX A3A3

REF DESIG	DESCRIPTION	QTY. PER ASSY.	MANUFACTURER'S PART NO.	MFR. CODE	RECM. VENDOR
L29	Coil, Fixed	2	22292-137	14632	
L30	Same as L29				
R1	Resistor, Fixed, Composition: 1 kΩ, 5%, 1/8 W	12	RCR05G102JS	81349	
R2	Same as R1				
R3	Resistor, Fixed, Composition: 2.2 kΩ, 5%, 1/8 W	1	RCR05G222JS	81349	
R4 Thru R13	Same as R1				
R14	Resistor Network: 100 Ω	1	4308R-102-101	80294	

3.5.3.2 Type 794095-1 VHF Low Band Preselector REF DESIG PREFIX A3A4

REF DESIG	DESCRIPTION	QTY. PER ASSY.	MANUFACTURER'S PART NO.	MFR. CODE	RECM. VENDOR
C1	Capacitor, Ceramic, Disc: 4700 pF, GMV, 500 V	2	8121-100-X7R0-472K	72982	
C2	Capacitor, Ceramic, Disc: 0.1 µF, ±20%, 50 V	6	34475-1	14632	
C3	Same as C2				
C4	Same as C1				
C5	Capacitor, Ceramic, Disc: 0.01 µF, ±10%, 50 V	8	8121-100-W5R0-103K	72982	
C6	Capacitor, Ceramic, Disc: 10 pF, ±0.5 pF, 100 V	8	8101-100-C0G0-100D	72982	
C7	Same as C6				
C8	Capacitor, Ceramic, Disc: 18 pF, ±5%, 100 V	8	8111-100-C0G0-180J	72982	
C9	Same as C8				
C10	Capacitor, Ceramic, Disc: 3.3 pF, ±0.25 pF, 100 V	16	8101-100-C0J0-339C	72982	
C11	Capacitor, Ceramic, Disc: 1.8 pF, ±0.1 pF, 100 V	4	8101-100-C0K0-189B	72982	
C12	Capacitor, Ceramic, Disc: 33 pF, ±5%, 100 V	4	8121-100-C0G0-330J	72982	
C13	Capacitor, Ceramic, Disc: 39 pF, ±5%, 100 V	2	8121-100-C0G0-390J	72982	
C14	Same as C11				
C15	Same as C12				
C16	Same as C12				
C17	Same as C11				
C18	Same as C12				
C19	Same as C11				
C20	Same as C13				
C21	Same as C10				
C22	Same as C6				
C23	Same as C8				
C24	Same as C8				
C25	Same as C6				
C26	Same as C5				
C27	Same as C5				
C28	Same as C10				
C29	Same as C10				
C30	Capacitor, Ceramic, Disc: 15 pF, ±5%, 100 V	6	8111-100-C0G0-150J	72982	
C31	Same as C30				
C32	Same as C10				
C33	Capacitor, Ceramic, Disc: 4.7 pF, ±0.5 pF, 100 V	4	8101-100-C0H0-479D	72982	
C34	Same as C8				
C35	Capacitor, Ceramic, Disc: 22 pF, ±5%, 100 V	2	811-100-C0G0-220J	72982	
C36	Same as C33				
C37	Same as C8				
C38	Same as C8				
C39	Same as C33				
C40	Same as C8				
C41	Same as C33				

REF DESIG PREFIX A3A4

REF DESIG	DESCRIPTION	QTY. PER ASSY.	MANUFACTURER'S PART NO.	MFR. CODE	RECM. VENDOR
C42	Same as C35				
C43	Same as C10				
C44	Same as C10				
C45	Same as C30				
C46	Same as C30				
C47	Same as C10				
C48	Same as C5				
C49	Same as C5				
C50	Not Used				
C51	Capacitor, Ceramic, Disc: 1.5 pF, ±0.1 pF, 100 V	2	8101-100-C0K0-159B	72982	
C52	Same as C6				
C53	Same as C6				
C54	Same as C10				
C55	Capacitor, Ceramic, Disc: 2.2 pF, ±.25 pF, 100 V	6	8101-100-C0J0-229C	72982	
C56	Capacitor, Ceramic, Disc: 12 pF, ±5%, 100 V	4	8111-100-C0G0-120J	72982	
C57	Same as C30				
C58	Not Used				
C59	Same as C56				
C60	Same as C56				
C61	Same as C55				
C62	Same as C56				
C63	Not Used				
C64	Same as C30				
C65	Same as C10				
C66	Same as C51				
C67	Same as C6				
C68	Same as C6				
C69	Not Used				
C70	Same as C5				
C71	Same as C5				
C72	Same as C55				
C73	Same as C10				
C74	Capacitor, Ceramic, Disc: 3.9 pF, ±0.25 pF, 100 V	4	8101-100-C0H0-399C	72982	
C75	Same as C74				
C76	Same as C10				
C77	Same as C10				
C78	Capacitor, Ceramic, Disc: 5.6 pF, ±0.5 pF, 100 V	4	8101-100-C0H0-569D	72982	
C79	Capacitor, Ceramic, Disc: 6.8 pF, ±0.5 pF, 100 V	2	8101-100-C0H0-689D	72982	
C80	Same as C55				
C81	Same as C78				
C82	Same as C78				

REF DESIG PREFIX A3A4

REF DESIG	DESCRIPTION	QTY. PER ASSY.	MANUFACTURER'S PART NO.	MFR. CODE	RECM. VENDOR
C83	Same as C10				
C84	Same as C78				
C85	Same as C55				
C86	Same as C79				
C87	Same as C10				
C88	Same as C10				
C89	Same as C74				
C90	Same as C74				
C91	Same as C55				
C92	Same as C5				
C93 Thru C96	Same as C2				
C97	Capacitor, Ceramic, Disc: 1000 pF, GMV, 500 V	5	B-GP1000PFP	91418	
C98 Thru C101	Same as C97				
CR1	Diode	16	MPN3401	04713	
CR2 Thru CR16	Same as CR1				
J1	Connector, Receptacle, P. C. Mounting	2	109	19505	
J2	Same as J1				
L1	Coil, Fixed: 18 µH, 10%	2	1025-50	99800	
L2	Same as L1				
L3	Coil, Fixed: 47 µH, 10%	8	1025-60	99800	
L4	Same as L3				
L5	Coil, Variable	3	6740-12	04213	
L6	Coil, Variable	2	6740-10		
L7	Coil, Variable	1	6806	04213	
L8	Same as L6				
L9	Same as L5				
L10	Same as L3				
L11	Same as L3				
L12	Coil, Variable	2	6740-9	04213	
L13	Coil, Variable	2	6740-8	04213	
L14	Same as L5				
L15	Same as L13				
L16	Same as L12				
L17	Same as L3				
L18	Same as L3				
L19	Coil, Variable	2	6807	04213	
L20	Coil, Variable	2	6808	04213	

REF DESIG PREFIX A3A4

REF DESIG	DESCRIPTION	QTY. PER ASSY.	MANUFACTURER'S PART NO.	MFR. CODE	RECM. VENDOR
L21	Coil, Variable	1	6809	04213	
L22	Same as L20				
L23	Same as L19				
L24	Same as L3				
L25	Same as L3				
L26	Coil, Variable	2	6810	04213	
L27	Coil, Variable	2	6811	04213	
L28	Coil, Variable	1	6812	04213	
L29	Same as L27				
L30	Same as L26				
R1	Resistor, Fixed, Composition: 2.2 kΩ, 5%, 1/8 W	4	RCR05G222JS	81349	
R2 Thru R4	Same as R1				
R5	Resistor, Fixed, Composition: 1 kΩ, 5%, 1/8 W	8	RCR05G102JS	81349	
R6 Thru R12	Same as R5				
R13	Resistor Network: 100 Ω	1	4308R-102-101	80294	

3.5.3.3 Type 794097-1 Pre-Amplifier REF DESIG PREFIX A3A5

REF DESIG	DESCRIPTION	QTY. PER ASSY.	MANUFACTURER'S PART NO.	MFR. CODE	RECM. VENDOR
A1	500 MHz LP Filter	1	370285	14632	
C1	Capacitor, Ceramic, Disc: 0.01 µF, ±20%, 50 V	9	34453-1	72982	
C2 Thru C4	Same as C1				
C5	Capacitor, Ceramic, Disc: 2200 pF, ±10%, 50 V	3	3BX050-S-222K	26654	
C6	Same as C5				
C7	Capacitor, Ceramic, Disc: 0.1 µF, ±20%, 50 V	2	34475-1	14632	
C8	Same as C7				
C9 Thru C13	Same as C1				
C14	Capacitor, Ceramic, Disc: 1000 pF, 10%, 100 V	4	8121-100-X7R0-102K	72982	
C15 Thru C17	Same as C14				
C18	Same as C5				
C19	Capacitor, Ceramic, Disc: 1.8 pF, ±0.1 pF, 100 V	1	8101-100-C0K0-189B	72982	
C20	Capacitor, Ceramic, Chip: 5.1 pF, ±.25 pF, 500 V	1	ATC700B5R1CP500X	29990	
CR1	Diode	3	5082-3080	28480	
CR2	Same as CR1				
CR3	Same as CR1				
CR4	Diode	3	5082-2800	28480	
CR5	Same as CR4				
CR6	Same as CR4				
J1	Connector, Receptacle	2	109	19505	
J2	Same as J1				
L1	Coil, Fixed	6	16209-10	14632	
L2 Thru L6	Same as L1				
R1	Not Used				
R2	Not Used				
R3	Not Used				
R4	Resistor, Fixed, Film: 499 Ω, 1%, 1/10 W	2	RN55C4990F	81349	
R5	Resistor, Fixed, Film: 5.11 kΩ, 1%, 1/10 W	2	RN55C5111F	81349	
R6	Same as R5				
R7	Resistor, Fixed, Film: 100 Ω, 1%, 1/10 W	1	RN55C1000F	81349	
R8	Resistor, Fixed, Film: 412 kΩ, 1%, 1/4 W	1	CC4123F	01121	
R9	Resistor, Fixed, Composition: 100 Ω, 5%, 1/4 W	2	RCR07G101JS	81349	
R10	Resistor, Fixed, Film: 38.8 kΩ, 1%, 1/10 W	1	RN55C3832F	81349	
R11	Resistor, Fixed, Film: 261 kΩ, 1%, 1/4 W	1	MF4C/261K/F	80031	
R12	Resistor, Fixed, Film: 100 kΩ, 1%, 1/10 W	5	RN55C1003F	81349	
R13	Resistor, Trimmer, Film: 100 kΩ, 10%, 1/2 W	1	62PAR100K	73138	

REF DESIG PREFIX A3A5

REF DESIG	DESCRIPTION	QTY. PER ASSY.	MANUFACTURER'S PART NO.	MFR. CODE	RECM. VENDOR
R14	Resistor, Fixed, Film: 9.09 kΩ, 1%, 1/10 W	1	RN55C9091F	81349	
R15	Resistor, Fixed, Film: 475 kΩ, 1%, 1/4 W	1	CC4753F	01121	
R16	Resistor, Fixed, Film: 121 kΩ, 1%, 1/4 W	1	MF4C/121 k/F	80031	
R17	Resistor, Fixed, Film: 6.19 kΩ, 1%, 1/10 W	1	RN55C6191F	81349	
R18	Resistor, Fixed, Film: 309 kΩ, 1%, 1/4 W	1	CC3093F	01121	
R19	Same as R12				
R20	Resistor, Fixed, Film: 42.2 kΩ, 1%, 1/10 W	1	RN55C4222F	81349	
R21	Resistor, Fixed, Film: 619 kΩ, 1%, 1/4 W	1	CC6193F	01121	
R22	Same as R12				
R23	Resistor, Fixed, Film: 68.1 kΩ, 1%, 1/10 W	1	RN55C6812F	81349	
R24	Same as R9				
R25	Same as R12				
R26	Resistor, Fixed, Film: 34.8 kΩ, 1%, 1/10 W	1	RN55C3482F	81349	
R27	Same as R12				
R28	Resistor, Fixed, Film: 21.5 kΩ, 1%, 1/10 W	1	RN55C2152F	81349	
R29	Resistor, Trimmer, Film: 20 kΩ, 10%, 1/2 W	1	62PAR20K	73138	
R30	Not Used				
R31	Not Used				
R32	Same as R4				
RT1	Thermistor: 3.9 kΩ, 5%, 1/8 W	1	DG125-392J	15454	
U1	Amplifier	1	A5-5	27956	
U2	Integrated Circuit	1	747HC	07263	
VR1	Diode: Zener, 6.3 V Silicon	1	.4M6.3AZ2	04713	

3.5.3.3.1 Type 370285 500 MHz LP Filter REF DESIG PREFIX A3A5A1

REF DESIG	DESCRIPTION	QTY. PER ASSY.	MANUFACTURER'S PART NO.	MFR. CODE	RECM. VENDOR
C1	Not Used				
C2	Capacitor, Variable, Air: .8-10 pF, 250 V	4	5202	91293	
C3	Not Used				
C4	Same as C2				
C5	Not Used				
C6	Same as C2				
C7	Not Used				
C8	Same as C2				
E1	Terminal, Feedthru	2	FT-SM-19L2011-1040		
E2	Same as E1				
L1	Inductor	1	170203-1	14632	
L2	Part of L1				
L3	Part of L1				
L4	Inductor	1	24835-1	14632	
L5	Part of L1				
L6	Inductor	1	24836-1	14632	
L7	Part of L1				
L8	Inductor	1	24837-1	14632	
L9	Part of L8				

3.5.3.4 Type 794096-1 1st Converter REF DESIG PREFIX A3A6

REF DESIG	DESCRIPTION	QTY. PER ASSY.	MANUFACTURER'S PART NO.	MFR. CODE	RECM. VENDOR
A1	1st Converter Chassis	1	370284	14632	
C1	Capacitor, Ceramic, Disc: 0.01 µF, ±20%, 50 V	1	34453-1	14632	
L1	Coil, Fixed: 0.1 µH	1	1025-94	99800	

3.5.3.4.1 Type 370284 1st Converter Chassis REF DESIG PREFIX A3A6A1

REF DESIG	DESCRIPTION	QTY. PER ASSY.	MANUFACTURER'S PART NO.	MFR. CODE	RECM. VENDOR
C1	Capacitor, Ceramic, Feedthru: 1000 pF, GMV, 500 V	3	54-794-009-102W	33095	
C2	Same as C1				
C3	Same as C1				
C4	Capacitor, Variable, Air: 0.8-10 pF, 250 V	4	5752	91293	
C5	Capacitor, Composition, Tubular: 0.15 pF, ±10%, 500 V	5	QCO.27PFK	95121	
C6	Same as C4				
C7	Same as C5				
C8	Same as C4				
C9	Same as C5				
C10	Same as C4				
C11	Not Used				
C12	Capacitor, Variable, Air: .4-6 pF, 250 V	1	MVM006	73899	
C13	Capacitor, Ceramic, Disc: 470 pF, ±5%, 100 V	2	8121-100C0G0-471J	72982	
C14	Same as C13				
C15	Capacitor, Ceramic, Disc: 200 pF	1	32-257578-40	91984	
C16	Not Used				
C17	Not Used				
C18	Same as C4				
C19	Same as C5				
C20	Same as C4				
C21	Same as C5				
C22	Same as C4				
C23	Capacitor, Ceramic, Tubular: 1.0 pF, 500 V, NPO	1	301-000C0K0-109C	72982	
E1	Terminal, Insulated, Feedthru	1	SFU16Y	04013	
E2	Terminal, Insulated, Standoff	2	S0S1	04013	
E3	Same as E2				
J1	Connector, Jack, SMC	3	10-0104-002	19505	
J2	Same as J1				
J3	Same as J1				
JW1	Wire, Tinned: Clopper Buss #20 AWG	AR	8020	70903	
L1	Inductor Assembly	7	190121-1	14632	
L2 Thru L4	Same as L1				
L5	Inductor	1	18563-2	14632	
L6	Coil, Fixed, Molded: 0.22 µH	1	1025-04	99800	
L7	Inductor	1	190147-1	14632	
L8 Thru L10	Same as L1				
L11	Number 18 Busswire	2	801918AWE	70903	
L12	Same as L11				

REF DESIG PREFIX A3A6A1

REF DESIG	DESCRIPTION	QTY. PER ASSY.	MANUFACTURER'S PART NO.	MFR. CODE	RECM. VENDOR
Q1	Transistor	1	SD203	18324	
R1	Resistor, Fixed, Composition: 12 kΩ, 5%, 1/8 W	1	RCR05G123JS	81349	
R2	Resistor, Fixed, Composition: 5.6 kΩ, 5%, 1/8 W	1	RCR05G562JS	81349	
R3	Resistor, Fixed, Composition: 100 Ω, 5%, 1/8 W	1	RCR07G101JS	81349	
R4	Resistor, Fixed, Composition: 22 Ω, 5%, 1/8 W	1	RCR05G220JS	81349	
U1	Mixer, Balanced, Modified	1	841066	14632	
U2	Amplifier	1	A17	14482	

3.5.3.5 Type 714006-1 2nd Converter REF DESIG PREFIX A3A7

REF DESIG	DESCRIPTION	QTY. PER ASSY.	MANUFACTURER'S PART NO.	MFR. CODE	RECM. VENDOR
A1	LO Amplifier Assembly	1	370396-1	14632	
C1	Capacitor, Ceramic, Disc: 0.01 µF, ±20%, 50 V	22	34453-1	14632	
C2	Same as C1				
C3	Same as C1				
C4	Same as C1				
C5	Same as C1				
C6	Same as C1				
C7	Same as C1				
C8	Same as C1				
C9	Capacitor, Mica, Dipped: 36 pF, ±2%, 500 V	1	CM04ED360G03	81349	
C10	Same as C1				
C11	Same as C1				
C12	Same as C1				
C13	Same as C1				
C14	Same as C1				
C15	Same as C1				
C16	Same as C1				
C17	Same as C1				
C18	Same as C1				
C19	Same as C1				
C20	Same as C1				
C21	Same as C1				
C22	Same as C1				
C23	Same as C1				
C24	Capacitor, Mica, Dipped: 75 pF, ±2%, 500 V	1	CM04ED750G03	81349	
C25	Capacitor, Ceramic, Mono: 22 pF, 5%, 100 V	1	8111-100C0G0-220J	72982	
C26	Capacitor, Ceramic, Disc: 0.1 µF, 20%, 50 V	3	34475-1	14632	
C27	Same as C26				
C28	Same as C26				
C29	Capacitor, Ceramic, Chip: 4.3 pF, 500 V	1	ATC700B4R3DP500X	29990	
CR1	Diode, PIN	3	5082-3080	28480	
CR2	Same as CR1				
CR3	Same as CR1				
CR4	Diode	10	MPN3401	04713	
CR5 Thru CR13	Same as CR4				
CR14	Diode	3	5082-2800	28480	
CR15	Same as CR14				
CR16	Same as CR15				
E1	Terminal	2	140-1941-02-01	71279	

REF DESIG PREFIX A3A7

REF DESIG	DESCRIPTION	QTY. PER ASSY.	MANUFACTURER'S PART NO.	MFR. CODE	RECM. VENDOR
E2	Same as E1				
L1	Coil, Fixed: 10 µH	1	1025-44	99800	
L2	Coil, Fixed: 1.0 µH, 10%	1	1025-20	99800	
L3	Coil, Fixed: 0.33 µH, 10%	2	1025-08	99800	
L4	Same as L3				
L5	Coil, Fixed: 10 µH	1	1025-44	99800	
L6	Coil, Fixed: 39 µH, 10%	2	1537-56	71279	
L7	Same as L6				
L8	Coil, Fixed: 47 µH, 10%	1	1025-60	99800	
R1	Resistor, Fixed, Composition: 34.8 kΩ, 1%, 1/10 W	1	RN55C3482F	81349	
R2	Resistor, Variable, Film: 20 kΩ, 10%, 1/2 W	1	62PR20K	73138	
R3	Resistor, Fixed, Film: 100 kΩ, 1%, 1/10 W	5	RN55C1003F	81349	
R4	Resistor, Fixed, Film: 6.19 kΩ, 1%, 1/10 W	1	RN55C6191F	81349	
R5	Resistor, Fixed, Film: 68.1 kΩ, 1%, 1/10 W	1	RN55C6812F	81349	
R6	Resistor, Fixed, Film: 21.5 kΩ, 1%, 1/10 W	1	RN55C2152F	81349	
R7	Same as R3				
R8	Same as R3				
R9	Resistor, Fixed, Film: 309 kΩ, 1%, 1/4 W	1	CC3039F	01121	
R10	Resistor, Fixed, Film: 619 kΩ, 1%, 1/4 W	1	CC6193F	01121	
R11	Same as R3				
R12	Resistor, Fixed, Film: 475 kΩ, 1%, 1/4 W	1	CC4753F	01121	
R13	Same as R3				
R14	Resistor, Fixed, Film: 38.3 kΩ, 1%, 1/10 W	1	RN55C3832F	81349	
R15	Resistor, Variable, Film: 100 kΩ, 10%, 1/2 W	1	62PR100K	73138	
R16	Resistor, Fixed, Film: 261 kΩ, 1%, 1/10 W	1	MF4C/261K/F	81349	
R17	Resistor, Fixed, Film: 121 kΩ, 1%, 1/10 W	1	RN55C1213F	81349	
R18	Resistor, Fixed, Film: 9.09 kΩ, 1%, 1/10 W	1	RN55C9091F	81349	
R19	Resistor, Fixed, Film: 42.2 kΩ, 1%, 1/10 W	1	RN55C4222F	81349	
R20	Resistor, Fixed, Film: 412 kΩ, 1%, 1/4 W	1	CC4123F	01121	
R21	Resistor, Fixed, Composition: 110 Ω, 5%, 1/8 W	1	RCR05G111JS	81349	
R22	Resistor, Fixed, Composition: 62 Ω, 5%, 1/8 W	1	RCR05G620JS	81349	
R23	Resistor, Fixed, Composition: 4.7 kΩ, 5%, 1/8 W	2	RCR05G472JS	81349	
R24	Same as R23				
R25	Resistor, Fixed, Film: 1 kΩ, 1%, 1/10 W	1	RN55C1001F	81349	
R26	Resistor, Fixed, Composition: 100 Ω, 5%, 1/8 W	2	RCR05G101JS	81349	
R27	Resistor, Fixed, Composition: 10 Ω, 5%, 1/8 W	1	RCR05G100JS	81349	
R28	Resistor, Fixed, Composition: 91 Ω, 5%, 1/8 W	1	RCR05G910JS	81349	
R29	Resistor, Fixed, Composition: 2.7 Ω, 5%, 1/8 W	1	RCR05G2R7JS	81349	
R30	Same as R26				
R31	Resistor, Fixed, Composition: 10 kΩ, 5%, 1/8 W	5	RCR05G103JS	81349	
R32	Resistor, Fixed, Composition: 1.5 kΩ, 5%, 1/8 W	5	RCR05G152JS	81349	

REF DESIG PREFIX A3A7

REF DESIG	DESCRIPTION	QTY. PER ASSY.	MANUFACTURER'S PART NO.	MFR. CODE	RECM. VENDOR
R33	Same as R31				
R34	Same as R32				
R35	Same as R31				
R36	Same as R32				
R37	Same as R31				
R38	Same as R32				
R39	Same as R31				
R40	Same as R32				
R41	Resistor, Fixed, Composition: 1 kΩ, 5%, 1/8 W	1	RCR05G102JS	81349	
RT1	Thermistor: 3.9 kΩ, 5%, 1/8 W	1	DG125-392J	15454	
U1	Integrated Circuit	1	747HC	07263	
U2	Integrated Circuit	2	CA2818	01281	
U3	Same as U2				
VR1	Voltage Regulator	1	.4M6.3AZ2	04713	

3.5.3.5.1 Type 370396 LO Amplifier Assembly REF DESIG PREFIX A3A7A1

REF DESIG	DESCRIPTION	QTY. PER ASSY.	MANUFACTURER'S PART NO.	MFR. CODE	RECM. VENDOR
A1	LO Amplifier Board	1	270082	14632	
C1	Capacitor, Ceramic, Feed-thru	1	54-794-009-471M	33095	
E1	Termination Cable	1	144/188	19505	
E2	Terminal, Feed-Thru, Insulated	1	SFU/6Y	04013	
J1	Connector, Receptacle, SMC, Right Angle	1	112	19505	
P1	Connector, Plug, SMC	1	UG1466	80058	
W1	Cable Assembly	1	17300-188-2	14632	

3.5.3.5.1.1 Part 270082 LO Amplifier Board REF DESIG PREFIX A3A7A1A1

REF DESIG	DESCRIPTION	QTY. PER ASSY.	MANUFACTURER'S PART NO.	MFR. CODE	RECM. VENDOR
C1	Capacitor, Ceramic, Chip: 470 pF, 10%, 200 V	5	ATC700B471KP200	29990	
C2	Capacitor, Ceramic, Chip: 2.1 pF, ±0.1 pF, 500 V	1	ATC700B2R1BP500	29990	
C3 Thru C5	Same as C1				
C6	Capacitor, Ceramic, Chip: 1000 pF, 20%, 50 V	1	ATC700B102MP50	29990	
C7	Capacitor, Ceramic, Disc: 0.01 µF, 20%, 50 V	1	34453-1	14632	
C8	Capacitor, Mica, Dipped: 24 pF, 5%, 500 V	1	CM04ED240J03	81349	
C9	Capacitor, Mica, Dipped: 12 pF, 5%, 500 V	2	CM04CD120J03	81349	
C10	Capacitor, Mica, Dipped: 22 pF, 2%, 500 V	1	CM04ED220G03	81349	
C11	Same as C9				
C12	Capacitor, Ceramic, Chip: 24 pF, 5%, 500 V	1	ATC700B240JP500	29990	
L1	Coil, Fixed: 0.68 µH	2	1025-16	99800	
L2	Coil, Fixed	2	1129-46	14632	
L3	Same as L1				
L4	Same as L2				
L5	Coil, Fixed: 33 µH	1	1025-56	99800	
L6	Coil, Variable	3	6740-15	04213	
L7	Same as L6				
L8	Same as L6				
Q1	Transistor	2	BFR-96	73445	
Q2	Same as Q1				
R1	Resistor, Fixed, Composition: 82 Ω, 5%, 1/4 W	1	RCR07G820JS	81349	
R2	Resistor, Fixed, Composition: 100 Ω, 5%, 1/8 W	2	RCR05G101JS	81349	
R3	Resistor, Fixed, Composition: 2.2 kΩ, 5%, 1/8 W	1	RCR05G222JS	81349	
R5	Resistor, Fixed, Composition: 2.7 Ω, 5%, 1/8 W	3	RCR05G2R7JS	81349	
RR6	Resistor, Fixed, Composition: 470 Ω, 5%, 1/8 W	1	RCR05G471JS	81349	
R7	Same as R5				
R8	Same as R2				
R9	Resistor, Fixed, Composition: 2.7 kΩ, 5%, 1/8 W	1	RCR05G272JS	81349	
R10	Same as R4				
R11	Same as R5				
U1	Mixer, Double Balanced	1	M9G	14482	

3.5.3.6 Type 784001-1 AGC Amplifier REF DESIG PREFIX A3A8

REF DESIG	DESCRIPTION	QTY. PER ASSY.	MANUFACTURER'S PART NO.	MFR. CODE	RECM. VENDOR
C1	Capacitor, Electrolytic, Tantalum: 2.2 µF, ±10%, 35 V	4	CS13BF225K	81349	
C2	Capacitor, Ceramic, Disc: 0.1 µF, ±20%, 50 V	6	34475-1	14632	
C3	Capacitor, Electrolytic, Tantalum: 4.7 µF, ±10%, 35 V	1	CS13BF475K	81349	
C4	Same as C1				
C5	Capacitor, Ceramic, Disc: 0.068 µF, ±10%, 100 V	1	6K06BX683K	81349	
C6	Capacitor, Ceramic, Disc: 0.01 µF, ±20%, 50 V	9	34453-1	14632	
C7	Same as C6				
C8	Same as C1				
C9 Thru C12	Same as C6				
C13	Same as C1				
C14 Thru C17	Same as C2				
C18	Capacitor, Electrolytic, Tantalum: 10 µF, ±10%, 50 V	2	MPT106M030P1A	76055	
C19	Same as C6				
C20	Same as C6				
C21	Same as C18				
C22	Same as C2				
C23	Capacitor, Electrolytic, Tantalum: 100 µF, ±20%, 35 V	1	MTP107M035P1C	76055	
C24	Same as C6				
C25	Capacitor, Electrolytic, Tantalum: 3.3 µF, ±10%, 35 V	2	196D335X9035JE3	56289	
C26	Same as C25				
CR1	Diode	8	1N462A	80131	
CR2 Thru CR8	Same as CR1				
L1	Coil, Fixed: 3000 µH, 5%	2	2500-50	99800	
L2	Coil, Fixed: 330 µH, 5%	1	2500-04	99800	
Q1	Transistor	3	2N2222A	80131	
Q2	Transistor	1	2N3251	80131	
Q3	Same as Q1				
Q4	Same as Q1				
Q5	Transistor	5	2N4037	80131	
Q6 Thru Q9	Same as Q5				
R1	Resistor, Fixed, Composition: 47 Ω, 5%, 1/8 W	1	RCR05G470JS	81349	
R2	Resistor, Fixed, Composition: 2.2 kΩ, 5%, 1/4 W	1	RCR07G222JS	81349	
R3	Resistor, Fixed, Composition: 22 Ω, 5%, 1/8 W	1	RCR05G220JS	81349	
R4	Resistor, Fixed, Composition: 2 kΩ, 5%, 1/8 W	2	RCR05G202JS	81349	
R5	Resistor, Fixed, Composition: 510 kΩ, 5%, 1/8 W	1	RCR05G514JS	81349	
R6	Resistor, Fixed, Composition: 360 kΩ, 5%, 1/8 W	1	RCR05G364JS	81349	

REF DESIG PREFIX A3A8

REF DESIG	DESCRIPTION	QTY. PER ASSY.	MANUFACTURER'S PART NO.	MFR. CODE	RECM. VENDOR
R7	Resistor, Fixed, Composition: 220 kΩ, 5%, 1/8 W	3	RCR05G224JS	81349	
R8	Resistor, Variable, Film: 50 kΩ, 10%, 1/2 W	1	62PR50K	73138	
R9	Resistor, Fixed, Composition: 100 kΩ, 5%, 1/8 W	4	RCR05G104JS	81349	
R10	Resistor, Fixed, Composition: 20 kΩ, 5%, 1/8 W	1	RCR05G203JS	81349	
R11	Resistor, Fixed, Composition: 560 kΩ, 5%, 1/8 W	1	RCR05G564JS	81349	
R12	Resistor, Variable, Film: 5 kΩ, 10%, 1/2 W	2	62PR5K	73138	
R13	Same as R9				
R14	Same as R7				
R15	Resistor, Variable, Film: 20 kΩ, 10%, 1/2 W	1	62PR20K	73138	
R16	Resistor, Fixed, Composition: 180 kΩ, 5%, 1/8 W	2	RCR05G184JS	81349	
R17	Resistor, Fixed, Composition: 2.2 kΩ, 5%, 1/8 W	3	RCR05G222JS	81349	
R18	Same as R17				
R19	Resistor, Fixed, Film: 392 Ω, 1%, 1/10 W	1	RN55C3920F	81349	
R20	Resistor, Variable, Film: 10 kΩ, 10%, 1/2 W	1	62PR10K	73138	
R21	Resistor, Fixed, Composition: 2.7 kΩ, 5%, 1/8 W	1	RCR05G272JS	81349	
R22	Resistor, Fixed, Composition: 8.2 kΩ, 5%, 1/8 W	2	RCR05G822JS	81349	
R23	Resistor, Fixed, Composition: 1 kΩ, 5%, 1/8 W	1	RCR05G102JS	81349	
R24	Resistor, Fixed, Film: 3.92 kΩ, 1%, 1/10 W	1	RN55C3921F	81349	
R25	Resistor, Fixed, Film: 4.75 kΩ, 1%, 1/10 W	1	RN55C4751F	81349	
R26	Resistor, Fixed, Film: 2.21 kΩ, 1%, 1/10 W	1	RN55C2211F	81349	
R27	Resistor, Fixed, Composition: 12 kΩ, 5%, 1/8 W	1	RCR05G123JS	81349	
R28	Same as R7				
R29	Resistor, Fixed, Composition: 470 Ω, 5%, 1/8 W	1	RCR05G471JS	81349	
R30	Resistor, Fixed, Film: 10 kΩ, 1%, 1/10 W	1	RN55C1002F	81349	
R31	Resistor, Fixed, Film: 2.0 kΩ, 1%, 1/10 W	1	RN55C2001F	81349	
R32	Resistor, Fixed, Composition: 10 kΩ, 5%, 1/8 W	5	RCR05G103JS	81349	
R33	Resistor, Fixed, Composition: 910 Ω, 5%, 1/8 W	1	RCR05G911JS	81349	
R34	Resistor, Fixed, Composition: 15 kΩ, 5%, 1/8 W	2	RCR05G153JS	81349	
R35	Same as R4				
R36	Resistor, Fixed, Composition: 3.9 kΩ, 5%, 1/8 W	1	RCR05G392JS	81349	
R37	Same as R32				
R38	Same as R32				
R39	Same as R32				
R40	Same as R16				
R41	Resistor, Fixed, Composition: 6.8 kΩ, 1%, 1/8 W	1	RCR05G682JS	81349	
R42	Same as R9				
R43	Same as R9				
R44	Resistor, Fixed, Film: 324 Ω, 1%, 1/10 W	1	RN55C3240F	81349	
R45	Resistor, Fixed, Film: 1.5 kΩ, 1%, 1/10 W	1	RN55C1501F	81349	
R46	Same as R34				
R47	Resistor, Fixed, Composition: 150 kΩ, 5%, 1/8 W	1	RCR05G154JS	81349	

REF DESIG PREFIX A3A8

REF DESIG	DESCRIPTION	QTY. PER ASSY.	MANUFACTURER'S PART NO.	MFR. CODE	RECM. VENDOR
R48	Resistor, Fixed, Composition: 4.7 kΩ, 5%, 1/8 W	11	RCR05G472JS	81349	
R49 Thru R57	Same as R48				
R58	Resistor, Fixed, Composition: 3.3 kΩ, 5%, 1/8 W	1	RCR05G332JS	81349	
R59	Same as R22				
R60	Same as R12				
R61	Same as R48				
R62	Resistor, Fixed, Composition: 91 kΩ, 5%, 1/8 W	1	RCR05G913JS	81349	
R63	Same as R32				
R64	Same as R17				
R65	Resistor, Fixed, Composition: 120 Ω, 5%, 1/8 W	1	RCR05G121JS	81349	
R66	Resistor, Variable, Film: 2 kΩ, 10%, 1/2 W	1	62PR2K	73138	
R67	Resistor, Fixed, Film: 11.5 kΩ, 1%, 1/10 W	1	RN5561152F	81349	
S1	Switch, Rocker, 3-SPST	1	76SB03	81073	
U1	Integrated Circuit	6	MC1458N	18324	
U2	Integrated Circuit	2	DG301CJ	17856	
U3	Integrated Circuit	2	DG200BA	17856	
U4	Same as U3				
U5 Thru U8	Same as U1				
U9	Same as U2				
U10	Integrated Circuit	1	SN54LS145J	01295	
U11	Same as U1				
U12	Integrated Circuit	1	LM337H	27014	
VR1	Voltage Regulator: 5.6 V	1	1N752A	80131	
VR2	Voltage Regulator: 5.1 V	1	1N751A	80131	

3.5.3.7 Type 724006-1 21.4 MHz IF Amplifier (10 kHz BW) REF DESIG PREFIX A3A9-A3A12

REF DESIG	DESCRIPTION	QTY. PER ASSY.	MANUFACTURER'S PART NO.	MFR. CODE	RECM. VENDOR
C1	Capacitor, Mica, Dipped: 10 pF, ±0.5 pF, 500 V	1	CM04CD100D03	81349	
C2	Capacitor, Ceramic, Disc: 4700 pF, 20%, 50 V	12	8121-050-651-472M	72982	
C3 Thru C8	Same as C2				
C9	Capacitor, Mica, Dipped: 24 pF, 5%, 500 V	1	CM04ED240J03	81349	
C10 Thru C14	Same as C2				
C15	Capacitor, Variable, Ceramic: 5-25 pF, 100 V, NPO	1	518-002A5-25	72982	
CR1	Diode	1	1N462A	80131	
FL1	Filter, BP	1	92001	14632	
L1	Coil, Fixed: 3.3 µH	1	1537-24	99800	
L2	Coil, Fixed	1	22295-66	14632	
L3	Coil, Fixed: 18 µH	1	1537-42	99800	
Q1	Transistor	1	3N211	80131	
Q2	Transistor	1	2N2857	80131	
R1	Resistor, Fixed, Composition: 200 Ω, 5%, 1/4 W	1	RCR07G201JS	81349	
R2	Resistor, Fixed, Composition: 2.2 kΩ, 5%, 1/4 W	1	RCR07G222JS	81349	
R3	Resistor, Variable, Film: 10 kΩ, 10%, 1/2 W	1	62PAR10K	73138	
R4	Resistor, Fixed, Composition: 15 kΩ, 5%, 1/4 W	1	RCR07G153JS	81349	
R5	Resistor, Fixed, Composition: 10 kΩ, 5%, 1/4 W	1	RCR07G103JS	81349	
R6	Resistor, Fixed, Composition: 68 kΩ, 5%, 1/4 W	1	RCR07G683JS	81349	
R7	Resistor, Fixed, Composition: 100 Ω, 5%, 1/4 W	4	RCR07G101JS	81349	
R8	Resistor, Fixed, Composition: 120 Ω, 5%, 1/4 W	1	RCR07G121JS	81349	
R9	Resistor, Fixed, Composition: 47 Ω, 5%, 1/4 W	3	RCR07G470JS	81349	
R10	Same as R7				
R11	Not Used				
R12	Resistor, Fixed, Composition: 4.7 kΩ, 5%, 1/4 W	1	RCR07G472JS	81349	
R13	Resistor, Fixed, Composition: 22 kΩ, 5%, 1/4 W	1	RCR07G223JS	81349	
R14	Same as R9				
R15	Resistor, Fixed, Composition: 470 Ω, 5%, 1/4 W	1	RCR07G471JS	81349	
R16	Same as R7				
R17	Resistor, Fixed, Composition: 33 Ω, 5%, 1/4 W	1	RCR07G330JS	81349	
R18	Same as R7				
R19	Resistor, Variable, Film: 500 Ω, 10%, 1/2 W	1	62PR500	73138	
R20	Resistor, Fixed, Composition: 3.3 kΩ, 5%, 1/4 W	1	RCR07G332JS	81349	
R21	Same as R9				
T1	Transformer	1	T4-1	15542	

3.5.3.8 Type 724006-2 21.4 MHz IF Amplifier (20 kHz BW) REF DESIG PREFIX A3A9 Thru A3A12

REF DESIG	DESCRIPTION	QTY. PER ASSY.	MANUFACTURER'S PART NO.	MFR. CODE	RECM. VENDOR
C1	Capacitor, Mica, Dipped: 10 pF, ±0.5 pF, 500 V	1	CM04CD100D03	81349	
C2	Capacitor, Ceramic, Disc: 4700 pF, ±20%, 50 V	12	8121-050-651-472M	72982	
C3 Thru C8	Same as C2				
C9	Capacitor, Mica, Dipped: 24 pF, 5%, 500 V	1	CM04ED240J03	81349	
C10 Thru C14	Same as C2				
C15	Capacitor, Variable, Ceramic: 5-25 pF, 100 V, NPO	1	518-002A5-25	72982	
CR1	Diode	1	1N462A	80131	
FL1	Filter, BP	1	92002	14632	
L1	Coil, Fixed: 3.3 µH, 10%	1	1537-24	99800	
L2	Coil, Fixed: 1 µH, 10%	1	1537-12	99800	
L3	Coil, Fixed: 18 µH, 10%	1	1537-42	99800	
Q1	Transistor	1	3N211	80131	
Q2	Transistor	1	2N2857	80131	
R1	Resistor, Fixed, Composition: 200 Ω, 5%, 1/4 W	1	RCR07G201JS	81349	
R2	Resistor, Fixed, Composition: 2.2 kΩ, 5%, 1/4 W	1	RCR07G222JS	81349	
R3	Resistor, Variable, Film: 10 kΩ, 10%, 1/2 W	1	62PAR10K	73138	
R4	Resistor, Fixed, Composition: 15 kΩ, 5%, 1/4 W	1	RCR07G153JS	81349	
R5	Resistor, Fixed, Composition: 10 kΩ, 5%, 1/4 W	1	RCR07G103JS	81349	
R6	Resistor, Fixed, Composition: 68 kΩ, 5%, 1/4 W	1	RCR07G683JS	81349	
R7	Resistor, Fixed, Composition: 100 Ω, 5%, 1/4 W	3	RCR07G101JS	81349	
R8	Resistor, Fixed, Composition: 120 Ω, 5%, 1/4 W	1	RCR07G121JS	81349	
R9	Resistor, Fixed, Composition: 47 Ω, 5%, 1/4 W	3	RCR07G470JS	81349	
R10	Same as R7				
R11	Resistor, Fixed, Composition: 3.9 kΩ, 5%, 1/4 W	1	RCR07G392JS	81349	
R12	Resistor, Fixed, Composition: 4.7 kΩ, 5%, 1/4 W	1	RCR07G472JS	81349	
R13	Resistor, Fixed, Composition: 22 kΩ, 5%, 1/4 W	1	RCR07G223JS	81349	
R14	Same as R9				
R15	Resistor, Fixed, Composition: 470 Ω, 5%, 1/4 W	1	RCR07G471JS	81349	
R16	Same as R7				
R17	Resistor, Fixed, Composition: 33 Ω, 5%, 1/4 W	1	RCR07G330JS	81349	
R18	Resistor, Fixed, Composition: 330 Ω, 5%, 1/4 W	1	RCR07G331JS	81349	
R19	Resistor, Variable, Film: 500 Ω, 10%, 1/2 W	1	62PR500	73138	
R20	Resistor, Fixed, Composition: 2.7 kΩ, 5%, 1/4 W	1	RCR07G272JS	81349	
R21	Same as R9				
T1	Transformer	1	T4-1	15542	

3.5.3.9 Type 724006-3 21.4 MHz IF Amplifier (50 kHz BW) REF DESIG PREFIX A3A9 Thru A3A12

REF DESIG	DESCRIPTION	QTY. PER ASSY.	MANUFACTURER'S PART NO.	MFR. CODE	RECM. VENDOR
C1	Capacitor, Mica, Dipped: 10 pF, ±0.5 pF, 500 V	1	CM04CD100D03	81349	
C2	Capacitor, Ceramic, Disc: 4700 pF, ±20%, 50 V	12	8121-050-651-472M	72982	
C3 Thru C8	Same as C2				
C9	Capacitor, Mica, Dipped: 24 pF, 5%, 500 V	1	CM04ED240J03	81349	
C10 Thru C14	Same as C2				
C15	Capacitor, Variable, Ceramic: 5-25 pF, 100 V, NPO	1	518-002A5-25	72982	
CR1	Diode	1	1N462A	80131	
FL1	Filter, BP	1	92000	14632	
L1	Coil, Fixed: 3.3 µH, 10%	1	1537-24	99800	
L2	Coil, Fixed: 1 µH, 10%	1	1537-12	99800	
L3	Coil, Fixed: 18 µH, 10%	1	1537-42	99800	
Q1	Transistor	1	3N211	80131	
Q2	Transistor	1	2N2857	80131	
R1	Resistor, Fixed, Composition: 200 Ω, 5%, 1/4 W	1	RCR07G201JS	81349	
R2	Resistor, Fixed, Composition: 2.2 kΩ, 5%, 1/4 W	2	RCR07G222JS	81349	
R3	Resistor, Variable, Film: 10 kΩ, 10%, 1/2 W	1	62PAR10K	73138	
R4	Resistor, Fixed, Composition: 15 kΩ, 5%, 1/4 W	1	RCR07G153JS	81349	
R5	Resistor, Fixed, Composition: 10 kΩ, 5%, 1/4 W	1	RCR07G103JS	81349	
R6	Resistor, Fixed, Composition: 68 kΩ, 5%, 1/4 W	1	RCR07G683JS	81349	
R7	Resistor, Fixed, Composition: 100 Ω, 5%, 1/4 W	3	RCR07G101JS	81349	
R8	Resistor, Fixed, Composition: 120 Ω, 5%, 1/4 W	1	RCR07G121JS	81349	
R9	Resistor, Fixed, Composition: 47 Ω, 5%, 1/4 W	3	RCR07G470JS	81349	
R10	Same as R7				
R11	Resistor, Fixed, Composition: 1.3 kΩ, 5%, 1/4 W	1	RCR07G132JS	81349	
R12	Resistor, Fixed, Composition: 4.7 kΩ, 5%, 1/4 W	1	RCR07G472JS	81349	
R13	Resistor, Fixed, Composition: 22 kΩ, 5%, 1/4 W	1	RCR07G223JS	81349	
R14	Same as R9				
R15	Resistor, Fixed, Composition: 470 Ω, 5%, 1/4 W	1	RCR07G471JS	81349	
R16	Same as R7				
R17	Resistor, Fixed, Composition: 33 Ω, 5%, 1/4 W	1	RCR07G330JS	81349	
R18	Resistor, Fixed, Composition: 680 Ω, 5%, 1/4 W	1	RCR07G681JS	81349	
R19	Resistor, Variable, Film: 500 Ω, 10%, 1/2 W	1	62PR500	73138	
R20	Resistor, Fixed, Composition: 2.7 kΩ, 5%, 1/4 W	1	RCR07G272JS	81349	
R21	Same as R9				
T1	Transformer	1	T4-1	15542	

3.5.3.10 Type 724006-4 21.4 MHz IF Amplifier (100 kHz BW) REF DESIG PREFIX A3A9 Thru A3A12

REF DESIG	DESCRIPTION	QTY. PER ASSY.	MANUFACTURER'S PART NO.	MFR. CODE	RECM. VENDOR
C1	Capacitor, Mica, Dipped: 10 pF, ±0.5 pF, 500 V	1	CM04CD100D03	81349	
C2	Capacitor, Ceramic, Disc: 4700 pF, ±20%, 50 V	12	8121-050-651-472M	72982	
C3 Thru C8	Same as C2				
C9	Capacitor, Mica, Dipped: 24 pF, 5%, 500 V	1	CM04ED240J03	81349	
C10 Thru C14	Same as C2				
C15	Capacitor, Variable, Ceramic: 5-25 pF, 100 V, NPO	1	518-002A5-25	72982	
CR1	Diode	1	1N462A	80131	
FL1	Filter, BP	1	92024	14632	
L1	Coil, Fixed: 3.3 µH	1	1537-24	99800	
L2	Coil, Fixed: 1 µH	1	1537-12	99800	
L3	Coil, Fixed: 18 µH	1	1537-42	99800	
Q1	Transistor	1	3N211	80131	
Q2	Transistor	1	2N2857	80131	
R1	Resistor, Fixed, Composition: 200 Ω, 5%, 1/4 W	1	RCR07G201JS	81349	
R2	Resistor, Fixed, Composition: 2.2 kΩ, 5%, 1/4 W	2	RCR07G222JS	81349	
R3	Resistor, Variable, Film: 10 kΩ, 10%, 1/2 W	1	62PAR10K	73138	
R4	Resistor, Fixed, Composition: 15 kΩ, 5%, 1/4 W	1	RCR07G153JS	81349	
R5	Resistor, Fixed, Composition: 10 kΩ, 5%, 1/4 W	1	RCR07G103JS	81349	
R6	Resistor, Fixed, Composition: 68 kΩ, 5%, 1/4 W	1	RCR07G683JS	81349	
R7	Resistor, Fixed, Composition: 100 Ω, 5%, 1/4 W	3	RCR07G101JS	81349	
R8	Resistor, Fixed, Composition: 120 Ω, 5%, 1/4 W	1	RCR07G121JS	81349	
R9	Resistor, Fixed, Composition: 47 Ω, 5%, 1/4 W	3	RCR07G470JS	81349	
R10	Same as R7				
R11	Resistor, Fixed, Composition: 750 kΩ, 5%, 1/4 W	1	RCR07G751JS	81349	
R12	Resistor, Fixed, Composition: 4.7 kΩ, 5%, 1/4 W	1	RCR07G472JS	81349	
R13	Resistor, Fixed, Composition: 22 kΩ, 5%, 1/4 W	1	RCR07G223JS	81349	
R14	Same as R9				
R15	Resistor, Fixed, Composition: 470 Ω, 5%, 1/4 W	1	RCR07G471JS	81349	
R16	Same as R7				
R17	Resistor, Fixed, Composition: 33 Ω, 5%, 1/4 W	1	RCR07G330JS	81349	
R18	Resistor, Fixed, Composition: 680 Ω, 5%, 1/4 W	1	RCR07G681JS	81349	
R19	Resistor, Variable, Film: 1 kΩ, 10%, 1/2 W	1	62PR1K	73138	
R20	Same as R2				
R21	Same as R9				
T1	Transformer	1	T4-1	15542	

3.5.3.11 Type 724006-5 21.4 MHz IF Amplifier (250 kHz BW) REF DESIG PREFIX A3A9 Thru A3A12

REF DESIG	DESCRIPTION	QTY. PER ASSY.	MANUFACTURER'S PART NO.	MFR. CODE	RECM. VENDOR
C1	Capacitor, Mica, Dipped: 10 pF, ±0.5 pF, 500 V	1	CM04CD100D03	81349	
C2	Capacitor, Ceramic, Disc: 4700 pF, ±20%, 50 V	12	8121-050-651-472M	72982	
C3 Thru C8	Same as C2				
C9	Capacitor, Mica, Dipped: 24 pF, 5%, 500 V	1	CM04ED240J03	81349	
C10 Thru C14	Same as C2				
C15	Capacitor, Variable, Ceramic: 5-25 pF, 100 V, NPO	1	518-002A5-25	72982	
CR1	Diode	1	1N462A	80131	
FL1	Filter, BP	1	92186	14632	
L1	Coil, Fixed: 3.3 µH	1	1537-24	99800	
L2	Coil, Fixed: 1 µH	1	1537-12	99800	
L3	Coil, Fixed: 18 µH	1	1537-42	99800	
Q1	Transistor	1	3N211	80131	
Q2	Transistor	1	2N2857	80131	
R1	Resistor, Fixed, Composition: 200 Ω, 5%, 1/4 W	1	RCR07G201JS	81349	
R2	Resistor, Fixed, Composition: 2.2 kΩ, 5%, 1/4 W	2	RCR07G222JS	81349	
R3	Resistor, Variable, Film: 10 kΩ, 10%, 1/2 W	1	62PAR10K	73138	
R4	Resistor, Fixed, Composition: 15 kΩ, 5%, 1/4 W	1	RCR07G153JS	81349	
R5	Resistor, Fixed, Composition: 10 kΩ, 5%, 1/4 W	1	RCR07G103JS	81349	
R6	Resistor, Fixed, Composition: 68 kΩ, 5%, 1/4 W	1	RCR07G683JS	81349	
R7	Resistor, Fixed, Composition: 100 Ω, 5%, 1/4 W	3	RCR07G101JS	81349	
R8	Resistor, Fixed, Composition: 120 Ω, 5%, 1/4 W	1	RCR07G121JS	81349	
R9	Resistor, Fixed, Composition: 47 Ω, 5%, 1/4 W	3	RCR07G470JS	81349	
R10	Same as R7				
R11	Resistor, Fixed, Composition: 750 Ω, 5%, 1/4 W	1	RCR07G751JS	81349	
R12	Resistor, Fixed, Composition: 4.7 kΩ, 5%, 1/4 W	1	RCR07G472JS	81349	
R13	Resistor, Fixed, Composition: 22 kΩ, 5%, 1/4 W	1	RCR07G223JS	81349	
R14	Same as R9				
R15	Resistor, Fixed, Composition: 470 Ω, 5%, 1/4 W	1	RCR07G471JS	81349	
R16	Same as R7				
R17	Resistor, Fixed, Composition: 33 Ω, 5%, 1/4 W	1	RCR07G330JS	81349	
R18	Resistor, Fixed, Composition: 1 kΩ, 5%, 1/4 W	1	RCR07G102JS	81349	
R19	Resistor, Trimmer, Film: 1 kΩ, 10%, 1/2 W	1	62PR1K	73138	
R20	Same as R2				
R21	Same as R9				
T1	Transformer	1	T4-1	15542	

3.5.3.12 Type 724006-6 21.4 MHz IF Amplifier (300 kHz BW) REF DESIG PREFIX A3A9 Thru A3A12

REF DESIG	DESCRIPTION	QTY. PER ASSY.	MANUFACTURER'S PART NO.	MFR. CODE	RECM. VENDOR
C1	Capacitor, Mica, Dipped: 10 pF, ±0.5 pF, 500 V	1	CM04CD100D03	81349	
C2	Capacitor, Ceramic, Disc: 4700 pF, ±20%, 50 V	12	8121-050-651-472M	72982	
C3 Thru C8	Same as C2				
C9	Capacitor, Mica, Dipped: 24 pF, 5%, 500 V	1	CM04ED240J03	81349	
C10 Thru C14	Same as C2				
C15	Capacitor, Variable, Ceramic: 5-25 pF, 100 V, NPO	1	518-002A5-25	72982	
CR1	Diode	1	1N462A	80131	
FL1	Filter, BP	1	92232	14632	
L1	Coil, Fixed: 3.3 µH, 10%	1	1537-24	99800	
L2	Coil, Fixed: 1 µH, 10%	1	1537-12	99800	
L3	Coil, Fixed: 18 µH, 10%	1	1537-42	99800	
Q1	Transistor	1	3N211	80131	
Q2	Transistor	1	2N2857	80131	
R1	Resistor, Fixed, Composition: 200 Ω, 5%, 1/4 W	1	RCR07G201JS	81349	
R2	Resistor, Fixed, Composition: 2.2 kΩ, 5%, 1/4 W	2	RCR07G222JS	81349	
R3	Resistor, Variable, Film: 10 kΩ, 10%, 1/2 W	1	62PAR10K	73138	
R4	Resistor, Fixed, Composition: 15 kΩ, 5%, 1/4 W	1	RCR07G153JS	81349	
R5	Resistor, Fixed, Composition: 10 kΩ, 5%, 1/4 W	1	RCR07G103JS	81349	
R6	Resistor, Fixed, Composition: 68 kΩ, 5%, 1/4 W	1	RCR07G683JS	81349	
R7	Resistor, Fixed, Composition: 100 Ω, 5%, 1/4 W	3	RCR07G101JS	81349	
R8	Resistor, Fixed, Composition: 120 Ω, 5%, 1/4 W	1	RCR07G121JS	81349	
R9	Resistor, Fixed, Composition: 47 Ω, 5%, 1/4 W	3	RCR07G470JS	81349	
R10	Same as R7				
R11	Resistor, Fixed, Composition: 750 Ω, 5%, 1/4 W	1	RCR07G751JS	81349	
R12	Resistor, Fixed, Composition: 4.7 kΩ, 5%, 1/4 W	1	RCR07G472JS	81349	
R13	Resistor, Fixed, Composition: 22 kΩ, 5%, 1/4 W	1	RCR07G223JS	81349	
R14	Same as R9				
R15	Resistor, Fixed, Composition: 470 Ω, 5%, 1/4 W	1	RCR07G471JS	81349	
R16	Same as R7				
R17	Resistor, Fixed, Composition: 33 Ω, 5%, 1/4 W	1	RCR07G330JS	81349	
R18	Resistor, Fixed, Composition: 1 kΩ, 5%, 1/4 W	1	RCR07G102JS	81349	
R19	Resistor, Variable, Film: 1 kΩ, 10%, 1/2 W	1	62PR1K		
R20	Same as R2				
R21	Same as R9				
T1	Transformer	1	T4-1	15542	

3.5.3.13 TYPE 724012-1 21.4 MHz IF AMPLIFIER (500 kHz BW) REF DESIG PREFIX A3A9-A3A12

REF DESIG	DESCRIPTION	QTY. PER ASSY.	MANUFACTURER'S PART NO.	MFR. CODE	RECM. VENDOR
C1	Capacitor, Ceramic, Disc: 4700 pF, ±20%, 50 V	7	8121-050-651-472M	72982	
C2	Same as C1				
C3	Capacitor, Mica, Dipped: 620 pF, ±2%, 300 V	2	DM15-621G	72136	
C4	Capacitor, Mica, Dipped: 110 pF, ±2%, 500 V	1	CM05FD111G03	81349	
C5	Capacitor, Variable, Air: 1-10 pF, 250 V	6	8052	91293	
C6	Capacitor, Ceramic, Tubular: 2 pF, ±0.25 pF, 500 V	1	301-000C0K0-209C	72982	
C7	Same as C5				
C8	Capacitor, Mica, Dipped: 100 pF, ±2%, 500 V	3	CM05FD101G03	81349	
C9	Same as C5				
C10	Same as C8				
C11 Thru C15	Same as C1				
C16	Same as C5				
C17	Capacitor, Mica, Dipped: 91 pF, ±2%, 500 V	1	CM05FD910G03	81349	
C18	Capacitor, Ceramic, Tubular: 2.2 pF, ±0.25 pF, 500 V	1	301-000C0J0-229C	72982	
C19	Same as C5				
C20	Same as C8				
C21	Same as C5				
C22	Capacitor, Mica, Dipped: 30 pF, ±2%, 500 V	1	CM05ED300G03	81349	
C23	Capacitor, Mica, Dipped: 82 pF, ±2%, 500 V	1	CM05ED820G03	81349	
C24	Same as C3				
CR1	Diode	1	1N462A	80131	
L1	Coil, Fixed: 18 µH	3	1537-42	99800	
L2	Inductor	6	22295-65	14632	
L3	Same as L2				
L4	Same as L1				
L5 Thru L7	Same as L2				
L8	Same as L1				
L9	Same as L2				
Q1	Transistor	1	3N211	80121	
R1	Resistor, Fixed, Composition: 1.5 kΩ, 5%, 1/8 W	1	RCR05G152JS	81349	
R2	Resistor, Variable, Film: 1 kΩ, 10%, 1/2 W	1	62PR1K	73138	
R3	Resistor, Fixed, Composition: 1 kΩ, 5%, 1/8 W	1	RCR05G102JS	81349	
R4	Resistor, Fixed, Composition: 47 Ω, 5%, 1/8 W	2	RCR05G470JS	81349	
R5	Resistor, Fixed, Composition: 100 Ω, 5%, 1/8 W	2	RCR05G101JS	81349	
R6	Resistor, Fixed, Composition: 68 kΩ, 5%, 1/8 W	1	RCR05G680JS	81349	
R7	Resistor, Fixed, Composition: 10 kΩ, 5%, 1/8 W	1	RCR05G103JS	81349	
R8	Resistor, Fixed, Composition: 3.9 kΩ, 5%, 1/8 W	1	RCR05G392JS	81349	
R9	Resistor, Variable, Film: 10 kΩ, 10%, 1/2 W	1	62PAR10K	73138	

REF DESIG PREFIX A3A9-A3A12

REF DESIG	DESCRIPTION	QTY. PER ASSY.	MANUFACTURER'S PART NO.	MFR. CODE	RECM. VENDOR
R10	Same as R5				
R11	Same as R4				
R12	Resistor, Fixed, Composition: 120 Ω, 5%, 1/8 W	1	RCR05G121JS	81349	

3.5.3.14 Type 724007-1 21.4 MHz IF Amplifier (1 MHz BW) REF DESIG PREFIX A3A9 Thru A3A12

REF DESIG	DESCRIPTION	QTY. PER ASSY.	MANUFACTURER'S PART NO.	MFR. CODE	RECM. VENDOR
C1	Capacitor, Mica, Dipped: 120 pF, ±2%, 500 V	1	CM04FD121G03	81349	
C2	Capacitor, Mica, Dipped: 470 pF, ±2%, 500 V	1	DM15-471G	72136	
C3	Capacitor, Variable, Ceramic: 5-25 pF, 100 V	6	518000A5-25	72982	
C4	Capacitor, Ceramic, Tubular: 4.3 pF, ±0.25 pF, 500 V	1	301-000C0H0-439C	72982	
C5	Same as C3				
C6	Capacitor, Mica, Dipped: 91 pF, ±2%, 500 V	4	CM04FD910G03	81349	
C7	Same as C3				
C8	Same as C6				
C9	Same as C3				
C10	Same as C6				
C11	Same as C3				
C12	Same as C6				
C13	Capacitor, Ceramic, Tubular: 6.2 pF, ±0.5 pF, 500 V	1	301-000C0H0-629D	72982	
C14	Same as C3				
C15	Capacitor, Mica, Dipped: 68 pF, ±2%, 500 V	1	CM04ED680G03	81349	
C16	Capacitor, Ceramic, Disc: 4700 pF, ±20%, 50 V	8	8121-050-651-472M	72982	
C17 Thru C23	Same as C16				
CR1	Diode	1	1N462A	80131	
L1	Inductor	6	22295-59	14632	
L2	Same as L1				
L3	Coil, Fixed: 15 µH	3	1537-40	99800	
L4	Same as L1				
L5	Same as L3				
L6	Same as L1				
L7	Same as L3				
L8	Same as L1				
L9	Same as L1				
L10	Coil, Fixed: 18 µH	1	1537-42	99800	
Q1	Transistor	1	2N5109	80131	
R1	Resistor, Fixed, Composition: 1.3 kΩ, 5%, 1/4 W	1	RCR07G132JS	81349	
R2	Resistor, Fixed, Composition: 6.8 kΩ, 5%, 1/4 W	1	RCR07G682JS	81349	
R3	Resistor, Fixed, Composition: 47 Ω, 5%, 1/4 W	2	RCR07G470JS	81349	
R4	Resistor, Fixed, Composition: 6.2 kΩ, 5%, 1/4 W	1	RCR07G622JS	81349	
R5	Resistor, Fixed, Composition: 100 Ω, 5%, 1/4 W	2	RCR07G101JS	81349	
R6	Resistor, Fixed, Composition: 330 Ω, 5%, 1/4 W	1	RCR07G331JS	81349	
R7	Same as R3				
R8	Resistor, Variable, Film: 500 Ω, 10%, 1/2 W	1	62PAR500	73138	
R9	Resistor, Fixed, Composition: 220 Ω, 5%, 1/4 W	1	RCR07G221JS	81349	
R10	Same as R5				
R11	Resistor, Fixed, Composition: 1.5 kΩ, 5%, 1/4 W	2	RCR07G152JS	81349	

REF DESIG PREFIX A3A9 Thru A3A12

REF DESIG	DESCRIPTION	QTY. PER ASSY.	MANUFACTURER'S PART NO.	MFR. CODE	RECM. VENDOR
R12	Resistor, Trim, Film: 500 Ω, 10%, 1/2 W	1	62PR500	73138	
R13	Same as R11				
T1	Transformer	1	T4-1	15542	

3.5.3.15 Type 724007-2 21.4 MHz IF Amplifier (2 MHz BW) REF DESIG PREFIX A3A9 Thru A3A12

REF DESIG	DESCRIPTION	QTY. PER ASSY.	MANUFACTURER'S PART NO.	MFR. CODE	RECM. VENDOR
C1	Capacitor, Mica, Dipped: 120 pf, ±2%, 500 V	1	CM04FD121G03	81349	
C2	Capacitor, Mica, Dipped: 300 pF, ±2%, 500 V	1	CM05FD301G03	81349	
C3	Capacitor, Variable, Ceramic: 5-25 pF, 100 V	6	518000A5-25	72982	
C4	Capacitor, Ceramic, Tubular: 8.2 pF, ±0.5 pF, 500 V	1	301-000C0H0-829D	72982	
C5	Same as C3				
C6	Capacitor, Mica, Dipped: 91 pF, ±2%, 500 V	4	CM04FD910G03	81349	
C7	Same as C3				
C8	Same as C6				
C9	Same as C3				
C10	Same as C6				
C11	Same as C3				
C12	Same as C6				
C13	Capacitor, Ceramic, Tubular: 12 pF, 5%, 500 V	1	301-000C0G0-120J	72982	
C14	Same as C3				
C15	Capacitor, Mica, Dipped: 68 pF, ±2%, 500 V	1	CM04ED680G03	81349	
C16	Capacitor, Ceramic, Disc: 4700 pF, ±20%, 50 V	8	8121-050-651-472M	72982	
C17 Thru C23	Same as C16				
CR1	Diode	1	1N462A	80131	
L1	Inductor	6	22295-65	14632	
L2	Same as L1				
L3	Coil, Fixed: 8.2 µH, 10%	3	1537-34	99800	
L4	Same as L1				
L5	Same as L3				
L6	Same as L1				
L7	Same as L3				
L8	Same as L1				
L9	Same as L1				
L10	Coil, Fixed: 18 µH, 10%	1	1537-42	99800	
Q1	Transistor	1	2N5109	80131	
R1	Resistor, Fixed, Composition: 470 Ω, 5%, 1/4 W	1	RCR07G471JS	81349	
R2	Resistor, Fixed, Composition: 6.8 kΩ, 5%, 1/4 W	1	RCR07G682JS	81349	
R3	Resistor, Fixed, Composition: 47 Ω, 5%, 1/4 W	2	RCR07G470JS	81349	
R4	Resistor, Fixed, Composition: 6.2 kΩ, 5%, 1/4 W	1	RCR07G622JS	81349	
R5	Resistor, Fixed, Composition: 100 Ω, 5%, 1/4 W	2	RCR07G101JS	81349	
R6	Resistor, Fixed, Composition: 330 Ω, 5%, 1/4 W	1	RCR07G331JS	81349	
R7	Same as R3				
R8	Resistor, Variable, Film: 500 Ω, 10%, 1/2 W	1	62PAR500	73138	
R9	Resistor, Fixed, Composition: 220 Ω, 5%, 1/4 W	1	RCR07G221JS	81349	
R10	Same as R5				
R11	Resistor, Fixed, Composition: 1.5 kΩ, 5%, 1/4 W	1	RCR07G152JS	81349	

REF DESIG PREFIX A3A9 Thru A3A12

REF DESIG	DESCRIPTION	QTY. PER ASSY.	MANUFACTURER'S PART NO.	MFR. CODE	RECM. VENDOR
R12	Resistor, Variable, Film: 1 kΩ, 10%, 1/2 W	1	62PR1K	73138	
R13	Resistor, Fixed, Composition: 1 kΩ, 5%, 1/4 W	1	RCR07G102JS	81349	
T1	Transformer	1	T4-1	15542	

3.5.3.16 Type 724008-1 21.4 MHz IF Amplifier (4 MHz BW) REF DESIG PREFIX A3A9 Thru A3A12

REF DESIG	DESCRIPTION	QTY. PER ASSY.	MANUFACTURER'S PART NO.	MFR. CODE	RECM. VENDOR
C1	Capacitor, Mica, Dipped: 160 pF, ±2%, 500 V	1	CM04FD161G03	81349	
C2	Capacitor, Mica, Dipped: 180 pF, ±2%, 500 V	1	CM04FD181G03	81349	
C3	Capacitor, Mica, Dipped: 24 pF, ±5%, 500 V	1	CM04ED240J03	81349	
C4	Capacitor, Mica, Dipped: 100 pF, ±2%, 500 V	2	CM04FD101G03	81349	
C5	Capacitor, Mica, Dipped: 120 pF, ±2%, 500 V	2	CM04FD121G03	81349	
C6	Capacitor, Mica, Dipped: 18 pF, ±5%, 500 V	2	CM04CD180J03	81349	
C7	Same as C5				
C8	Same as C4				
C9	Same as C6				
C10	Capacitor, Mica, Dipped: 91 pF, ±2%, 500 V	1	CM04FD910G03	81349	
C11	Capacitor, Ceramic, Disc: 4700 pF, ±20%, 50 V	8	8121-050-651-472M	72982	
C12 Thru C18	Same as C11				
CR1	Diode	1	1N462A	80131	
L1	Coil, Variable	6	558-7107-09	71279	
L2	Same as L1				
L3	Coil, Fixed: 3.9 µH	2	1537-26	99800	
L4	Same as L1				
L5	Same as L1				
L6	Same as L3				
L7	Same as L1				
L8	Same as L1				
L9	Coil, Fixed: 18 µH	1	1537-42	99800	
Q1	Transistor	1	2N5109	80131	
R1	Resistor, Fixed, Composition: 390 Ω, 5%, 1/4 W	1	RCR07G391JS	81349	
R2	Resistor, Fixed, Composition: 6.8 kΩ, 5%, 1/4 W	1	RCR07G682JS	81349	
R3	Resistor, Fixed, Composition: 47 Ω, 5%, 1/4 W	1	RCR07G470JS	81349	
R4	Resistor, Fixed, Composition: 6.2 kΩ, 5%, 1/4 W	1	RCR07G622JS	81349	
R5	Resistor, Fixed, Composition: 100 Ω, 5%, 1/4 W	2	RCR07G101JS	81349	
R6	Resistor, Fixed, Composition: 330 Ω, 5%, 1/4 W	1	RCR07G331JS	81349	
R7	Resistor, Fixed, Composition: 68 Ω, 5%, 1/4 W	1	RCR07G680JS	81349	
R8	Resistor, Variable, Film: 500 Ω, 10%, 1/2 W	1	62PAR500	73138	
R9	Resistor, Fixed, Composition: 220 Ω, 5%, 1/4 W	1	RCR07G221JS	81349	
R10	Same as R5				
R11	Resistor, Fixed, Composition: 1.5 kΩ, 5%, 1/4 W	1	RCR07G152JS	81349	
R12	Resistor, Variable, Film: 1 kΩ, 10%, 1/2 W	1	62PR1K	73138	
R13	Resistor, Fixed, Composition: 1 kΩ, 5%, 1/4 W	1	RCR07G102JS	81349	
T1	Transformer	1	T4-1	15542	

3.5.3.17 Type 794112-1 Video/Audio/COR REF DESIG PREFIX A3A13

REF DESIG	DESCRIPTION	QTY. PER ASSY.	MANUFACTURER'S PART NO.	MFR. CODE	RECM. VENDOR
C1	Capacitor, Mica, Dipped: 20 pF, ±5%, 500 V	1	CM04ED200J03	81349	
C2	Capacitor, Ceramic, Chip: 470 pF, ±10%, 200 V	6	ATC700B471KP200	29990	
C3	Capacitor, Electrolytic, Tantalum: 2.2 µF, ±20%, 35 V	3	196D225X035JE3	56289	
C4	Capacitor, Ceramic, Disc: 0.01 µF, 20%, 50 V	3	34453-1	14632	
C5	Capacitor, Ceramic, Disc: 0.1 µF, µ20%, 50 V	14	34475-1	14632	
C6	Same as C4				
C7	Same as C4				
C8	Same as C3				
C9	Same as C3				
C10 Thru C12	Same as C5				
C13	Same as C2				
C14 Thru C23	Same as C5				
C24 Thru C26	Same as C2				
C27	Capacitor, Electrolytic, Tantalum: 15 µF, 20%, 15 V	2	196D156X0015JE3	56289	
C28	Same as C27				
C29	Capacitor, Electrolytic, Tantalum: 0.22 µF, 10%, 35 V	1	150D224X9035A2	56289	
C30	Same as C2				
CR1	Diode	2	1N4449	80131	
CR2	Same as CR1				
CR3	Diode	2	1N462A	80131	
CR4	Diode	2	5082-2800	28480	
CR5	Same as CR4				
CR6	Same as CR3				
L1	Coil, Fixed: 1.2 µH	2	553-3635-38	71279	
L2	Same as L1				
L3	Coil, Fixed: 8.2 µH	2	1537-34	99800	
L4	Same as L3				
L5	Coil, Fixed: 160 µH	1	1537-86	99800	
Q1	Transistor	1	U1899E	15818	
Q2	Transistor	1	2N2222A	80131	
Q3	Transistor	1	2N3906	80131	
R1	Resistor, Fixed, Composition: 180 kΩ, 5%, 1/4 W	1	RCR07G184JS	81349	
R2	Resistor, Fixed, Composition: 470 Ω, 5%, 1/4 W	7	RCR07G471JS	81349	
R3	Same as R2				
R4	Resistor, Variable, Film: 5 kΩ, 10%, 1/2 W	2	62PAR5K	73138	
R5	Same as R2				
R6	Resistor, Fixed, Composition: 1 kΩ, 5%, 1/4 W	9	RCR07G102JS	81349	

REF DESIG PREFIX A3A13

REF DESIG	DESCRIPTION	QTY. PER ASSY.	MANUFACTURER'S PART NO.	MFR. CODE	RECM. VENDOR
R7	Resistor, Fixed, Composition: 91 Ω, 5%, 1/4 W	2	RCR07G910JS	81349	
R8	Resistor, Fixed, Composition: 62 kΩ, 5%, 1/4 W	1	RCR07G623Js	81349	
R9 Thru R11	Same as R2				
R12	Resistor, Variable, Film: 2 kΩ, 10%, 1/2 W	1	62PAR2K	73138	
R13	Same as R6				
R14	Same as R7				
R15	Resistor, Variable, Film: 1 kΩ, 10%, 1/2 W	1	62PAR1K	73138	
R16	Resistor, Fixed, Composition: 10 kΩ, 5%, 1/4 W	7	RCR07G103JS	81349	
R17	Same as R16				
R18	Resistor, Fixed, Composition: 100 kΩ, 5%, 1/4 W	3	RCR07G104JS	81349	
R19	Resistor, Fixed, Composition: 560 Ω, 5%, 1/4 W	2	RCR07G561JS	81349	
R20	Same as R16				
R21	Resistor, Fixed, Composition: 10 Ω, 5%, 1/4 W	1	RCR07G100JS	81349	
R22	Same as R6				
R23	Resistor, Fixed, Composition: 2.2 MΩ, 5%, 1/4 W	1	RCR07G225JS	81349	
R24	Same as R16				
R25	Same as R16				
R26	Resistor, Fixed, Composition: 33 kΩ, 5%, 1/4 W	1	RCR07G333JS	81349	
R27	Same as R18				
R28	Same as R6				
R29	Same as R2				
R30	Resistor, Fixed, Composition: 4.7 kΩ, 5%, 1/4 W	2	RCR07G472JS	81349	
R31	Same as R18				
R32	Resistor, Fixed, Composition: 2.7 kΩ, 5%, 1/4 W	1	RCR07G272JS	81349	
R33	Same as R16				
R34	Same as R19				
R35 Thru R38	Same as R6				
R39	Resistor, Fixed, Composition: 220 Ω, 5%, 1/4 W	1	RCR07G221JS	81349	
R40	Same as R6				
R41	Same as R16				
R42	Same as R30				
R43	Resistor, Fixed, Composition: 1.0 MΩ, 5%, 1/4 W	1	RCR07G105JS	81349	
U1	Integrated Circuit	2	DG302CJ	17856	
U2	Same as U1				
U3	Integrated Circuit	2	LM318N	27014	
U4	Same as U3				
U5	Integrated Circuit	2	LH0002CN	27014	
U6	Integrated Circuit	1	DG301CJ	17056	

REF DESIG PREFIX A3A13

REF DESIG	DESCRIPTION	QTY. PER ASSY.	MANUFACTURER'S PART NO.	MFR. CODE	RECM. VENDOR
U7	Same as U5				
U8	Integrated Circuit	3	MC1458N	18324	
U9	Integrated Circuit	1	NE555N	18324	
U10	Same as U8				
U11	Same as U8				

3.5.3.18 Type 724009-1 IF Output/AM Demodulator REF DESIG PREFIX A3A14

REF DESIG	DESCRIPTION	QTY. PER ASSY.	MANUFACTURER'S PART NO.	MFR. CODE	RECM. VENDOR
C1	Capacitor, Ceramic, Disc: 4700 pF, ±20%, 50 V	46	8121-050-651-472M	72982	
C2 Thru C8	Same as C1				
C9	Capacitor, Variable, Ceramic: 5-25 pF, 100 V, N750	3	518-000A5-25	72982	
C10 Thru C14	Same as C1				
C15	Capacitor, Electrolytic, Tantalum: 2.2 µF, ±20%, 35 V	1	196D225X0035JE3	56289	
C16 Thru C21	Same as C1				
C22	Not Used				
C23	Same as C1				
C24	Same as C1				
C25	Capacitor, Mica, Dipped: 91 pF, ±2%, 500 V	2	CM04FD910G03	81349	
C26	Capacitor, Variable, Ceramic: 5-25 pF, 100 V, NP0	2	518-002A-25	72982	
C27	Capacitor, Ceramic, Disc: 1.5 pF, ±0.1 pF, 100 V	1	8101-100-C0K0-159B	72982	
C28	Same as C26				
C29	Same as C25				
C30 Thru C32	Same as C1				
C33	Capacitor, Ceramic, Disc: 0.01 µF, 20%, 50 V	2	34453-1	14632	
C34 Thru C36	Same as C1				
C37	Capacitor, Ceramic, Disc: 0.47 µF, 20%, 50 V	4	34452-1	14632	
C38 Thru C41	Same as C1				
C42	Capacitor, Variable, Ceramic: 1-3 pF, 100 V, NP0	1	518-000A1-3	72982	
C43	Not Used				
C44	Capacitor, Ceramic, Disc: 4.7 pF, ±0.5 pF, 100 V	2	8101-100-C0H0-479D	72982	
C45	Same as C44				
C46	Same as C37				
C47	Same as C37				
C48	Not Used				
C49	Not Used				
C50	Same as C1				
C51	Same as C33				
C52 Thru C55	Same as C1				
C56	Capacitor, Electrolytic, Tantalum: 22 µF, ±20%, 10 V	3	196D226X0010JE3	56289	

REF DESIG PREFIX A3A14

REF DESIG	DESCRIPTION	QTY. PER ASSY.	MANUFACTURER'S PART NO.	MFR. CODE	RECM. VENDOR
C57 Thru C61	Same as C1				
C62	Not Used				
C63	Same as C56				
C64	Same as C1				
C65	Same as C56				
C66	Same as C1				
C67	Same as C1				
C68	Capacitor, Ceramic, Disc: 470 pF, ±5%, 100 V	1	8121-100-C0G0-471J	72982	
C69	Not Used				
C70	Same as C37				
C71	Same as C1				
CR1	Diode	10	MPN3401	04713	
CR2 Thru CR4	Same as CR1				
CR5	Diode	1	1N462A	80131	
CR6 Thru CR11	Same as CR1				
CR12	Diode	1	5082-2800	28480	
L1	Coil, Fixed: 1.5 µH, 10%	1	1025-24	99800	
L2	Coil, Fixed: 27 µH, 10%	4	1025-54	99800	
L3	Same as L2				
L4	Coil, Fixed: 2.2 µH, 10%	1	1025-28	99800	
L5	Same as L2				
L6	Coil, Fixed: 18 µH, 10%	1	1025-50	99800	
L7	Coil, Fixed: 470 µH, 10%	1	1025-84	99800	
L8	Same as L2				
Q1	Transistor	1	3N211	80131	
Q2	Transistor	5	2N2857	80131	
Q3	Same as Q2				
Q4	Same as Q2				
Q5	Same as Q2				
Q6	Same as Q2				
R1	Resistor, Fixed, Composition: 3.3 kΩ, 5%, 1/8 W	8	RCR05G332JS	81349	
R2 Thru R4	Same as R1				
R5	Resistor, Fixed, Composition: 47 Ω, 5%, 1/8 W	3	RCR05G470JS	81349	
R6	Resistor, Fixed, Composition: 10 kΩ, 5%, 1/8 W	2	RCR05G103JS	81349	
R7	Same as R5				
R8	Resistor, Fixed, Composition: 68 kΩ, 5%, 1/8 W	1	RCR05G683JS	81349	

REF DESIG PREFIX A3A14

REF DESIG	DESCRIPTION	QTY. PER ASSY.	MANUFACTURER'S PART NO.	MFR. CODE	RECM. VENDOR
R9	Resistor, Fixed, Composition: 100 kΩ, 5%, 1/8 W	5	RCR05G104JS	81349	
R10	Resistor, Fixed, Composition: 33 kΩ, 5%, 1/8 W	3	RCR05G333JS	81349	
R11	Resistor, Fixed, Composition: 4.7 kΩ, 5%, 1/8 W	8	RCR05G472JS	81349	
R12	Resistor, Fixed, Composition: 120 Ω, 5%, 1/8 W	1	RCR05G121JS	81349	
R13	Resistor, Fixed, Composition: 33 Ω, 5%, 1/8 W	4	RCR05G330JS	81349	
R14	Resistor, Fixed, Composition: 220 Ω, 5%, 1/8 W	3	RCR05G221JS	81349	
R15	Same as R1				
R16	Not Used				
R17	Resistor, Fixed, Composition: 150 Ω, 5%, 1/8 W	2	RCR05G151JS	81349	
R18	Resistor, Fixed, Composition: 6.8 kΩ, 5%, 1/8 W	5	RCR05G682JS	81349	
R19	Same as R18				
R20	Same as R17				
R21	Resistor, Fixed, Composition: 330 Ω, 5%, 1/4 W	3	RCR07G331JS	81349	
R22	Resistor, Fixed, Composition: 100 Ω, 5%, 1/8 W	3	RCR05G101JS	81349	
R23	Resistor, Variable, Film: 200 Ω, 10%, 1/2 W	2	62PAR200	73138	
R24	Resistor, Fixed, Composition: 2.7 kΩ, 5%, 1/8 W	3	RCR05G272JS	81349	
R25	Same as R10				
R26	Same as R9				
R27	Same as R1				
R28	Same as R1				
R29	Resistor, Fixed, Composition: 300 Ω, 5%, 1/8 W	1	RCR05G301JS	81349	
R30	Same as R1				
R31	Same as R10				
R32	Same as R9				
R33	Same as R11				
R34	Same as R11				
R35	Resistor, Fixed, Composition: 330 Ω, 5%, 1/8 W	1	RCR05G331JS	81349	
R36	Resistor, Fixed, Composition: 22 Ω, 5%, 1/8 W	1	RCR05G220JS	81349	
R37	Same as R21				
R38	Resistor, Fixed, Composition: 27 Ω, 5%, 1/8 W	1	RCR05G270JS	81349	
R39	Resistor, Fixed, Composition: 200 kΩ, 5%, 1/8 W	1	RCR05G204JS	81349	
R40	Resistor, Fixed, Composition: 8.2 kΩ, 5%, 1/8 W	4	RCR05G822JS	81349	
R41	Same as R40				
R42	Resistor, Fixed, Composition: 470 Ω, 5%, 1/8 W	4	RCR05G471JS	81349	
R43	Resistor, Variable, Film: 5 kΩ, 10%, 1/2 W	2	62PR5K	73138	
R44	Resistor, Fixed, Composition: 2.2 kΩ, 5%, 1/8 W	2	RCR05G222JS	81349	
R45	Resistor, Fixed, Composition: 1.0 kΩ, 5%, 1/8 W	2	RCR05G102JS	81349	
R46	Resistor, Variable, Film: 100 kΩ, 10%, 1/2 W	1	62PR100K	73138	
R47	Same as R5				
R48	Same as R6				
R49	Same as R18				

REF DESIG PREFIX A3A14

REF DESIG	DESCRIPTION	QTY. PER ASSY.	MANUFACTURER'S PART NO.	MFR. CODE	RECM. VENDOR
R50	Same as R40				
R51	Same as R42				
R52	Same as R13				
R53	Same as R22				
R54	Same as R18				
R55	Same as R18				
R56	Resistor, Fixed, Composition: 5.6 kΩ, 5%, 1/8 W	1	RCR05G562JS	81349	
R57	Same as R14				
R58	Resistor, Fixed, Composition: 470 Ω, 5%, 1/4 W	1	RCR07G471JS	81349	
R59	Resistor, Variable, Film: 500 Ω, 10%, 1/2 W	1	62PR500	73138	
R60	Resistor, Variable, Composition: 2 kΩ, 10%, 1/2 W	1	62PR2K	73138	
R61	Same as R40				
R62	Same as R45				
R63	Resistor, Fixed, Composition: 10 Ω, 5%, 1/8 W	3	RCR05G100JS	81349	
R64	Same as R63				
R65	Same as R63				
R66	Same as R14				
R67	Same as R11				
R68	Same as R24				
R69	Resistor, Variable, Film: 5 kΩ, 10%, 1/2 W	1	62PAR5K	73138	
R70	Same as R11				
R71	Same as R44				
R72	Resistor, Variable, Film: 10 kΩ, 10%, 1/2 W	1	62PR10K	73138	
R73	Resistor, Fixed, Composition: 15 kΩ, 5%, 1/8 W	1	RCR05G153JS	81349	
R74	Same as R13				
R75	Same as R24				
R76	Same as R11				
R77	Same as R9				
R78	Resistor, Fixed, Composition: 360 Ω, 5%, 1/8 W	1	RCR05G361JS	81349	
R79	Same as R9				
R80	Same as R13				
R81	Same as R42				
R82	Same as R21				
R83	Same as R11				
R84	Same as R11				
R85	Same as R42				
R86	Resistor, Fixed, Composition: 56 Ω, 5%, 1/8 W	1	RCR05G560JS	81349	
R87	Resistor, Fixed, Composition: 680 Ω, 5%, 1/8 W	1	RCR05G681JS	81349	
RT1	Resistor, Thermal: 1 kΩ	1	2D102	04239	
T1	Transformer	2	22295-61	14632	
T2	Same as T1				

REF DESIG PREFIX A3A14

REF DESIG	DESCRIPTION	QTY. PER ASSY.	MANUFACTURER'S PART NO.	MFR. CODE	RECM. VENDOR
T3	Transformer	1	22295-64	14632	
T4	Transformer	1	T4-1	15542	
TP1	Terminal, Forked	1	140-1941-02-01	71279	
U1	Integrated Circuit	2	SL1611C	52648	
U2	Integrated Circuit	1	DG301CJ	17856	
U3	Integrated Circuit	2	LM318N	27014	
U4	Same as U1				
U5	Integrated Circuit	3	SL521C	52648	
U6	Same as U5				
U7	Same as U5				
U8	Same as U3				
VR1	Voltage Regulator: 8.2 V	4	1N756A	80131	
VR2	Same as VR1				
VR3	Same as VR1				
VR4	Same as VR1				

3.5.3.19 Type 794106-1 FM Demodulator (10 kHz BW) REF DESIG PREFIX A3A15 Thru A3A18

REF DESIG	DESCRIPTION	QTY. PER ASSY.	MANUFACTURER'S PART NO.	MFR. CODE	RECM. VENDOR
C1	Capacitor, Ceramic, Disc: 0.01 µF, ±20%, 50 V	5	34453-1	14632	
C2 Thru C4	Same as C1				
C5	Capacitor, Ceramic, Tubular: 15 pF, ±5%, 500 V	2	301-000U2J0-150J	72982	
C6	Same as C5				
C7	Same as C1				
C8	Capacitor, Ceramic, Disc: 4700 µF, ±10%, 200 V	1	CK06BX472K	81349	
C9	Capacitor, Ceramic, Disc: 0.47 µF, 20%, 50 V	2	34452-1	14632	
C10	Same as C9				
C11	Capacitor, Ceramic, Disc: 0.1 µF, 20%, 50 V	2	34475-1	14632	
C12	Capacitor, Electrolytic, Tantalum: 2.2 µF, ±20%, 35 V	2	196D225X0035JE3	56289	
C13	Same as C12				
C14	Same as C11				
C15	Capacitor, Ceramic, Disc: 4700 pF, ±20%, 50 V	1	8121-050-651-472M	72982	
C16	Capacitor, Ceramic, Disc: 0.01 µF, 20%, 50 V	1	34453-1	14632	
C17	Capacitor, Ceramic, Disc: 0.068 µF, 10%, 100 V	1	CK06BX683K	81349	
E1	Term, Miniature	1	2010B1	88245	
L1	Coil, Variable	1	558-7107-19	71279	
L2	Coil, Variable: 2.43-2.97 µH	1	558-7107-18	71279	
L3	Coil, Fixed: 18 µH	1	1537-42	99800	
L4	Coil, Fixed: 22 µH	1	553-3635-53	71279	
L5	Coil, Fixed: 1.5 µH	1	553-3635-51	71279	
L6	Coil, Fixed: 1.2 µH	2	553-3635-38	71279	
L7	Same as L6				
R1	Resistor, Fixed, Composition: 220 Ω, 5%, 1/4 W	1	RCR07G221JS	81349	
R2	Resistor, Fixed, Film: 2.37 kΩ, 1%, 1/10 W	1	RN55C2371F	81349	
R3	Resistor, Fixed, Film: 1.37 kΩ, 1%, 1/10 W	1	RN55C1371F	81349	
R4	Resistor, Fixed, Composition: 10 kΩ, 5%, 1/4 W	1	RCR07G103JS	81349	
R5	Resistor, Fixed, Film: 4.75 kΩ, 1%, 1/10 W	1	RN55C4751F	81349	
R6	Resistor, Fixed, Film: 51.1 kΩ, 1%, 1/10 W	1	RN55C5112F	81349	
R7	Resistor, Fixed, Film: 46.4 kΩ, 1%, 1/10 W	3	RN55C4642F	81349	
R8	Same as R7				
R9	Same as R7				
R10	Resistor, Fixed, Film: 2.21 kΩ, 1%, 1/10 W	2	RN55C2211F	81349	
R11*	Resistor, Fixed, Film: 26.7 kΩ, 1%, 1/10 W	2	RN55C2672F	81349	
R12	Resistor, Trim, Film: 10 kΩ, 10%, 1/2 W	1	62PAR10K	73138	
R13	Same as R11				
R14	Same as R10				
R15	Resistor, Variable, Film: 10 kΩ, 10%, 1/2 W	1	62PAR10K	73138	
	*Nominal Value - Final Value Factory Selected				

REF DESIG PREFIX A3A15 Thru A3A18

REF DESIG	DESCRIPTION	QTY. PER ASSY.	MANUFACTURER'S PART NO.	MFR. CODE	RECM. VENDOR
R16	Resistor, Fixed, Composition: 470 Ω, 5%, 1/4 W	1	RCR07G471JS	81349	
R17	Resistor, Fixed, Composition: 22 kΩ, 5%, 1/8 W	2	RCR05G223JS	81349	
R18	Resistor, Fixed, Composition: 22 Ω, 5%, 1/4 W	1	RCR07G220JS	81349	
R19	Same as R17				
U1	Integrated Circuit	1	CA3089E	02735	
U2	Integrated Circuit	1	MC1458N	07263	
U3	Integrated Circuit	1	IH5040CPE	32293	
Y1	Discriminator, Crystal	1	2378F	25120	

3.5.3.20 Type 794106-2 FM Demodulator (20 kHz BW) REF DESIG PREFIX A3A15 Thru A3A18

REF DESIG	DESCRIPTION	QTY. PER ASSY.	MANUFACTURER'S PART NO.	MFR. CODE	RECM. VENDOR
C1	Capacitor, Ceramic, Disc: 0.01 µF, ±20%, 50 V	5	34453-1	14632	
C2 Thru C4	Same as C1				
C5	Capacitor, Ceramic, Tubular: 15 pF, ±5%, 500 V	2	301-000U2J0-150J	72982	
C6	Same as C5				
C7	Same as C1				
C8	Capacitor, Ceramic, Disc: 4700 pF, ±10%, 200 V	1	CK06BX472K	81349	
C9	Capacitor, Ceramic, Disc: 0.47 µF, 20%, 50 V	2	34452-1	14632	
C10	Same as C9				
C11	Capacitor, Ceramic, Disc: 0.056 µF, ±10%, 100 V	2	CK06BX563K	81349	
C12	Capacitor, Electrolytic, Tantalum: 2.2 µF, ±20%, 35 V	2	196D225X0035JE3	56289	
C13	Same as C12				
C14	Capacitor, Ceramic, Disc: 0.1 µF, ±20%, 50 V	1	34475-1	14632	
C15	Capacitor, Ceramic, Disc: 4700 pF, ±20%, 50 V	1	8121-050-651-472M	72982	
C16	Capacitor, Ceramic, Disc: 0.01 µF, 20%, 50 V	1	34453-1	14632	
C17	Same as C11				
E1	Term, Miniature	1	2010B1	88245	
L1	Coil, Variable	1	558-7107-19	71279	
L2	Coil, Variable: 2.43-2.97 µH	1	558-7107-18	71279	
L3	Coil, Fixed: 18 µH	1	1537-42	99800	
L4	Coil, Fixed: 10 µH	1	553-3635-49	71279	
L5	Coil, Fixed: 6.8 µH	1	553-3635-47	71279	
L6	Coil, Fixed: 1.2 µH	2	553-3635-38	71279	
L7	Same as L6				
R1	Resistor, Fixed, Composition: 220 Ω, 5%, 1/4 W	1	RCR07G221JS	81349	
R2	Resistor, Fixed, Film: 3.65 kΩ, 1%, 1/10 W	1	RN55C3651F	81349	
R3	Resistor, Fixed, Film: 1.62 kΩ, 1%, 1/10 W	1	RN55C1621F	81349	
R4	Resistor, Fixed, Composition: 10 kΩ, 5%, 1/4 W	1	RCR07G103JS	81349	
R5	Resistor, Fixed, Film: 4.75 kΩ, 1%, 1/10 W	1	RN55C4751F	81349	
R6	Resistor, Fixed, Film: 51.1 kΩ, 1%, 1/10 W	4	RN55C5112F	81349	
R7	Resistor, Fixed, Film: 46.4 kΩ, 1%, 1/10 W	3	RN55C5112F	81349	
R8	Same as R7				
R9	Same as R7				
R10	Resistor, Fixed, Film: 2.21 kΩ, 1%, 1/10 W	2	RN55C2211F	81349	
R11*	Resistor, Fixed, Film: 26.7 kΩ, 1%, 1/10 W	2	RN55C2672F	81349	
R12	Resistor, Trim, Film: 10 kΩ, 10%, 1/2 W	1	62PAR10K	73138	
R13	Same as R11				
R14	Same as R10				
R15	Resistor, Variable, Film: 10 kΩ, 10%, 1/2 W	1	62PAR10K	73138	
	*Nominal Value - Final Value Factory Selected				

REF DESIG PREFIX A3A15 Thru A3A18

REF DESIG	DESCRIPTION	QTY. PER ASSY.	MANUFACTURER'S PART NO.	MFR. CODE	RECM. VENDOR
R16	Resistor, Fixed, Composition: 470 Ω, 5%, 1/4 W	1	RCR07G471JS	81349	
R17	Resistor, Fixed, Composition: 22 kΩ, 5%, 1/8 W	2	RCR056223JS	81349	
R18	Resistor, Fixed, Composition: 22 Ω, 5%, 1/4 W	1	RCR07G220JS	81349	
R19	Same as R17				
U1	Integrated Circuit	1	CA3089E	02735	
U2	Integrated Circuit	1	MC1458N	18324	
U3	Integrated Circuit	1	IH5040CPE	32293	
Y1	Discriminator, Crystal	1	2378F	25120	

3.5.3.21 Type 794107-1 FM Demodulator (50 kHz BW) REF DESIG PREFIX A3A15 Thru A3A18

REF DESIG	DESCRIPTION	QTY. PER ASSY.	MANUFACTURER'S PART NO.	MFR. CODE	RECM. VENDOR
C1	Capacitor, Ceramic, Disc: 0.01 µF, ±20%, 50 V	4	34453-1	14632	
C2 Thru C4	Same as C1				
C5	Capacitor, Ceramic, Disc: 4700 pF, ±20%, 50 V	2	8121-050-651-472M	72982	
C6	Capacitor, Ceramic, Tubular: 39 pF, ±5% pF, 500 V	1	301-000U2J0-390J	72982	
C7	Capacitor, Mica, Dipped: 150 pF, 2%, 500 V	1	CM04FD151G03	81349	
C8	Capacitor, Ceramic, Disc: 0.47 µF, ±20%, 50 V	4	34452-1	14632	
C9	Same as C8				
C10	Same as C8				
C11	Same as C8				
C12	Capacitor, Ceramic, Disc: 0.018 µH, 10%, 50 V	1	CK06BX183K	81349	
C13	Capacitor, Electrolytic, Tantalum: 2.2 µF, ±20%, 35 V	2	196D225X0035JE3	56289	
C14	Same as C13				
C15	Capacitor, Ceramic, Disc: 0.1 µF, 20%, 50 V	1	34475-1	14632	
C16	Capacitor, Ceramic, Disc: 0.012 µF, 10%, 50 V	1	CK06BX123K	81349	
C17	Same as C5				
C18	Capacitor, Variable, Ceramic: 2.5-9 pF, 250 V	1	518-000A 2.5-9	72982	
C19	Note Used				
E1	Term, Miniature	1	2010B1	88245	
L1	Coil, Fixed: 18 µH	1	1537-42	99800	
L2	Coil, Fixed	1	21210-168	14632	
L3	Coil, Fixed: 4.7 µH	1	553-3635-45	71279	
L4	Coil, Fixed: 3.3 µH	1	553-3635-43	71279	
L5	Coil, Fixed: 1.2 µH	2	553-3635-38	71279	
L6	Same as L5				
L7	Coil, Fixed: 10 µH	1	1025-44	99800	
R1	Resistor, Fixed, Composition: 220 Ω, 5%, 1/4 W	1	RCR07G221JS	81349	
R2	Resistor, Fixed, Film: 4.75 kΩ, 1%, 1/10 W	2	RN55C4751F	81349	
R3	Resistor, Fixed, Composition: 10 kΩ, 5%, 1/4 W	1	RCR07G103JS	81349	
R4	Same as R2				
R5	Resistor, Fixed, Film: 51.1 kΩ, 1%, 1/10 W	1	RN55C5112F	81349	
R6	Resistor, Fixed, Film: 46.4 kΩ, 1%, 1/10 W	1	RN55C4642F	81349	
R7	Resistor, Fixed, Film: 75 kΩ, 1%, 1/10 W	2	RN55C7502F	81349	
R8	Same as R7				
R9	Resistor, Fixed, Film: 2.21 kΩ, 1%, 1/10 W	1	RN55C2211F	81349	
R10	Resistor, Fixed, Film: 5.11 kΩ, 1%, 1/10 W	1	RN55C5111F	81349	
R11	Resistor, Variable, Film: 50 kΩ, 10%, 1/2 W	1	62PAR50K	73138	
R12	Resistor, Fixed, Composition: 470 Ω, 5%, 1/4 W	1	RCR07G471JS	81349	
R13	Resistor, Fixed, Film: 26.7 kΩ, 1%, 1/10 W	1	RN55C2672F	81349	
R14	Resistor, Variable, Film: 5 kΩ, 10%, 1/2 W	1	62PAR5K	73138	
R15	Same as R13				

REF DESIG PREFIX A3A15 Thru A3A18

REF DESIG	DESCRIPTION	QTY. PER ASSY.	MANUFACTURER'S PART NO.	MFR. CODE	RECM. VENDOR
R16	Resistor, Fixed, Composition: 22 kΩ, 5%, 1/8 W	2	RCR05G223JS	81349	
R17	Resistor, Fixed, Composition: 22 Ω, 5%, 1/4 W	1	RCR07G220JS	81349	
R18	Same as R16				
U1	Integrated Circuit	1	CA3089E	02735	
U2	Integrated Circuit	1	741HC	07263	
U3	Integrated Circuit	1	IH5040CPE	32293	

3.5.3.22 Type 794107-2 FM Demodulator (100 kHz BW) REF DESIG PREFIX A3A15 Thru A3A18

REF DESIG	DESCRIPTION	QTY. PER ASSY.	MANUFACTURER'S PART NO.	MFR. CODE	RECM. VENDOR
C1	Capacitor, Ceramic, Disc: 0.01 µF, ±20%, 50 V	4	34453-1	14632	
C2 Thru C4	Same as C1				
C5	Capacitor, Ceramic, Disc: 4700 pF, ±20%, 50 V	1	8121-050-651-472M	72982	
C6	Capacitor, Ceramic, Tubular: 39 pF, ±5% pF, 500 V	1	301-000U2J0-390J	72982	
C7	Capacitor, Mica, Dipped: 150 pF, 2%, 500 V	1	CM04FD151G03	81349	
C8	Capacitor, Ceramic, Disc: 0.47 µF, ±20%, 50 V	4	34452-1	14632	
C9	Same as C8				
C10	Same as C8				
C11	Same as C8				
C12	Capacitor, Ceramic, Disc: 0.01 µF, 10%, 200 V	1	CK06BX103K	81349	
C13	Capacitor, Electrolytic, Tantalum: 2.2 µF, ±20%, 35 V	2	196D225X0035JE3	56289	
C14	Same as C13				
C15	Capacitor, Ceramic, Disc: 0.1 µF, 20%, 50 V	1	34475-1	14632	
C16	Capacitor, Ceramic, Disc: 6800 pF, 10%, 200 V	1	CK06BX682K	81349	
C17	Same as C5				
C18	Capacitor, Variable, Ceramic: 2.5-9 pF, 250 V	1	518-000A-2.5-9	72982	
C19	Capacitor, Ceramic, Monolythic: 4.7 pF, Porm. 5 pF, 100 V	1	8101-100C0H0-479D	72982	
E1	Term, Miniature	1	2010B1	88245	
L1	Coil, Fixed: 18 µH	1	1537-42	99800	
L2	Coil, Fixed	1	21210-168	14632	
L3	Coil, Fixed: 2.2 µH	1	553-3635-41	71279	
L4	Coil, Fixed: 1.5 µH	1	553-3635-39	71279	
L5	Coil, Fixed: 1.2 µH	2	553-3635-38	71279	
L6	Same as L5				
L7	Coil, Fixed: 10 µH	1	1025-44	99800	
R1	Resistor, Fixed, Composition: 220 Ω, 5%, 1/4 W	1	RCR07G221JS	81349	
R2	Resistor, Fixed, Film: 1.21 kΩ, 1%, 1/10 W	1	RN55C1211F	81349	
R3	Resistor, Fixed, Composition: 10 kΩ, 5%, 1/4 W	1	RCR07G103JS	81349	
R4	Resistor, Fixed, Film: 4.75 kΩ, 1%, 1/10 W	1	RN55C4751F	81349	
R5	Resistor, Fixed, Film: 51.1 kΩ, 1%, 1/10 W	1	RN55C5112F	81349	
R6	Resistor, Fixed, Film: 46.4 kΩ, 1%, 1/10 W	1	RN55C4642F	81349	
R7	Resistor, Fixed, Film: 75 kΩ, 1%, 1/10 W	2	RN55C7502F	81349	
R8	Same as R7				
R9	Resistor, Fixed, Film: 2.21 kΩ, 1%, 1/10 W	1	RN55C2211F	81349	
R10	Resistor, Fixed, Film: 5.11 kΩ, 1%, 1/10 W	1	RN55C5111F	81349	
R11	Resistor, Variable, Film: 50 kΩ, 10%, 1/2 W	1	62PAR50K	73138	
R12	Resistor, Fixed, Composition: 470 Ω, 5%, 1/4 W	1	RCR07G471JS	81349	
R13	Resistor, Fixed, Film: 26.7 kΩ, 1%, 1/10 W	2	RN55C2672F	81349	
R14	Resistor, Variable, Film: 5 kΩ, 10%, 1/2 W	1	62PAR5K	73138	

REF DESIG PREFIX A3A15 Thru A3A18

REF DESIG	DESCRIPTION	QTY. PER ASSY.	MANUFACTURER'S PART NO.	MFR. CODE	RECM. VENDOR
R15	Same as R13				
R16	Resistor, Fixed, Composition: 22 kΩ, 5%, 1/8 W	2	RCR05G223JS	81349	
R17	Resistor, Fixed, Composition: 22 Ω, 5%, 1/4 W	1	RCR07G220JS	81349	
R18	Same as R16				
U1	Integrated Circuit	1	CA3089E	02735	
U2	Integrated Circuit	1	LM318H	27014	
U3	Integrated Circuit	1	IH5040CPE	32293	

3.5.3.23 Type 794107-3 FM Demodulator (250 kHz BW) REF DESIG PREFIX A3A15 Thru A3A18

REF DESIG	DESCRIPTION	QTY. PER ASSY.	MANUFACTURER'S PART NO.	MFR. CODE	RECM. VENDOR
C1	Capacitor, Ceramic, Disc: 0.01 µF, ±20%, 50 V	4	34453-1	14632	
C2 Thru C4	Same as C1				
C5	Capacitor, Ceramic, Disc: 4700 pF, ±20%, 50 V	2	8121-050-651-472M	72982	
C6	Capacitor, Ceramic, Tubular: 39 pF, ±5%, 500 V	1	301-000U2J0-390J	72982	
C7	Mica, Dipped: 150 pF, 2%, 500 V	1	CM04FD151G03	81349	
C8	Capacitor, Ceramic, Disc: 0.47 pF, ±20%, 50 V	4	34452-1	14632	
C9	Same as C8				
C10	Same as C8				
C11	Same as C8				
C12	Capacitor, Ceramic, Disc: 3300 pF, 10%, 200 V	1	CK06BX332K	81349	
C13	Capacitor, Electrolytic, Tantalum: 2.2 µF, ±20%, 35 V	2	196D225X0035JE3	56289	
C14	Same as C13				
C15	Capacitor, Ceramic, Disc: 0.1 µF, 20%, 50 V	1	34475-1	14632	
C16	Capacitor, Ceramic, Disc: 3900 pF, 10%, 200 V	1	CK06BX392K	81349	
C17	Same as C5				
C18	Capacitor, Variable, Ceramic: 2.5-9 pF, 25 V	1	518-000A-2.5-9	72982	
C19	Capacitor, Ceramic, Monolythic: 4.7 pF, Porm. 5 pF, 100 V	1	8101-100C0H0-479D	72982	
E1	Term, Miniature	1	2010B1	88245	
L1	Coil, Fixed: 18 µH	1	1537-42	99800	
L2	Coil, Fixed	1	21210-168	14632	
L3	Coil, Fixed: 1 µH	1	553-3635-37	71279	
L4	Coil, Fixed: 680 µH	1	553-3635-35	71279	
L5	Coil, Fixed: 1.2 µH	2	553-3635-38	71279	
L6	Same as L5				
L7	Coil, Fixed: 10 µH	1	1025-44	99800	
R1	Resistor, Fixed, Composition: 220 Ω, 5%, 1/4 W	1	RCR07G221JS	81349	
R2	Resistor, Fixed, Film: 453 Ω, 1%, 1/10 W	1	RN55C4530F	81349	
R3	Resistor, Fixed, Composition: 10 kΩ, 5%, 1/4 W	1	RCR07G103JS	81349	
R4	Resistor, Fixed, Film: 4.75 kΩ, 1%, 1/10 W	1	RN55C4751F	81349	
R5	Resistor, Fixed, Film: 51.1 kΩ, 1%, 1/10 W	2	RN55C5112F	81349	
R6	Resistor, Fixed, Film: 46.4 kΩ, 1%, 1/10 W	1	RN55C4642F	81349	
R7	Resistor, Fixed, Film: 75 kΩ, 1%, 1/10 W	2	RN55C7502F	81349	
R8	Same as R7				
R9	Resistor, Fixed, Film: 2.21 kΩ, 1%, 1/10 W	1	RN55C2211F	81349	
R10	Resistor, Fixed, Film: 5.11 kΩ, 1%, 1/10 W	1	RN55C5111F	81349	
R11	Resistor, Variable, Film: 50 kΩ, 10%, 1/2 W	1	62PAR50K	73138	
R12	Resistor, Fixed, Composition: 470 Ω, 5%, 1/4 W	1	RCR07G471JS	81349	
R13	Resistor, Fixed, Film: 26.7 kΩ, 1%, 1/10 w	2	RN55C2672F	81349	
R14	Resistor, Variable, Film: 5 kΩ, 10%, 1/2 W	1	62PAR5K	73138	

REF DESIG PREFIX A3A15 Thru A3A18

REF DESIG	DESCRIPTION	QTY. PER ASSY.	MANUFACTURER'S PART NO.	MFR. CODE	RECM. VENDOR
R15	Same as R13				
R16	Resistor, Fixed, Composition: 22 kΩ, 5%, 1/8 W	2	RCR05G223JS	81349	
R17	Resistor, Fixed, Composition: 22 Ω, 5%, 1/4 W	1	RCR07G220JS	81349	
R18	Same as R16				
U1	Integrated Circuit	1	CA3089E	02735	
U2	Integrated Circuit	2	LM318H	27014	
U3	Same as U2				
U4	Integrated Circuit	1	IH5040CPE	32293	

3.5.3.24 Type 794107-4 FM Demodulator (300 kHz BW) REF DESIG PREFIX A3A15 Thru A3A18

REF DESIG	DESCRIPTION	QTY. PER ASSY.	MANUFACTURER'S PART NO.	MFR. CODE	RECM. VENDOR
C1	Capacitor, Ceramic, Disc: 0.01 µF, ±20%, 50 V	4	34453-1	14632	
C2 Thru C4	Same as C1				
C5	Capacitor, Ceramic, Disc: 4700 pF, ±20%, 50 V	2	8121-050-651-472M	72982	
C6	Capacitor, Ceramic, Tubular: 39 pF, ±5% pF, 500 V	1	301-000U2J0-390J	72982	
C7	Capacitor, Mica, Dipped: 150 pF, 2%, 500 V	1	CM04FD151G03	81349	
C8	Capacitor, Ceramic, Disc: 0.47 pF, ±20%, 50 V	4	34452-1	14632	
C9	Same as C8				
C10	Same as C8				
C11	Same as C8				
C12	Capacitor, Ceramic, Disc: 2700 pF, 10%, 200 V	1	CK06BX272K	81349	
C13	Capacitor, Electrolytic, Tantalum: 2.2 µF, ±20%, 35 V	2	196D225X0035JE3	56289	
C14	Same as C13				
C15	Capacitor, Ceramic, Disc: 0.1 µF, 20%, 50 V	1	34475-1	14632	
C16	Capacitor, Ceramic, Disc: 3300 pF, 10%, 200 V	1	CK06BX332K	81349	
C17	Same as C5				
C18	Capacitor, Variable, Ceramic: 2.5-9 pF, 25 V	1	518-000A-2.5-9	72982	
C19	Capacitor, Ceramic Disc: 4.7pF, ±.5 pF, 100 V	1	8101-100-C0H0-479D	72982	
E1	Term, Miniature	1	2010B1	88245	
L1	Coil, Fixed: 18 µH	1	1537-42	99800	
L2	Coil, Fixed	1	21210-168	14632	
L3	Coil, Fixed: 820 µH	1	553-3635-36	71279	
L4	Coil, Fixed: 560 µH	1	553-3635-34	71279	
L5	Coil, Fixed: 1.2 µH	2	553-3635-38	71279	
L6	Same as L5				
L7	Coil, Fixed, Mold: 10 µH	1	1025-44	99800	
R1	Resistor, Fixed, Composition: 220 Ω, 5%, 1/4 W	1	RCR07G221JS	81349	
R2	Resistor, Fixed, Film: 392 Ω, 1%, 1/10 W	1	RN55C3920F	81349	
R3	Resistor, Fixed, Composition: 10 kΩ, 5%, 1/4 W	1	RCR07G103JS	81349	
R4	Resistor, Fixed, Film: 4.75 kΩ, 1%, 1/10 W	1	RN55C4751F	81349	
R5	Resistor, Fixed, Film: 51.1 kΩ, 1%, 1/10 W	1	RN55C5112F	81349	
R6	Resistor, Fixed, Film: 46.4 kΩ, 1%, 1/10 W	1	RN55C4642F	81349	
R7	Resistor, Fixed, Film: 75 kΩ, 1%, 1/10 W	2	RN55C7502F	81349	
R8	Same as R7				
R9	Resistor, Fixed, Film: 2.21 kΩ, 1%, 1/10 W	1	RN55C2211F	81349	
R10	Resistor, Fixed, Film: 5.11 kΩ, 1%, 1/10 W	1	RN55C5111F	81349	
R11	Resistor, Variable, Film: 50 kΩ, 10%, 1/2 W	1	62PAR50K	73138	
R12	Resistor, Fixed, Composition: 470 Ω, 5%, 1/4 W	1	RCR07G471JS	81349	
R13	Resistor, Fixed, Film: 26.7 kΩ, 1%, 1/10 W	2	RN55C2672F	81349	
R14	Resistor, Trim, Film: 5 kΩ, 10%, 1/2 W	1	62PAR5K	73138	

REF DESIG PREFIX A3A15 Thru A3A18

REF DESIG	DESCRIPTION	QTY. PER ASSY.	MANUFACTURER'S PART NO.	MFR. CODE	RECM. VENDOR
R15	Same as R13				
R16	Resistor, Fixed, Composition: 22 kΩ, 5%, 1/8 W	2	RCR05G223JS	81349	
R17	Resistor, Fixed, Composition: 22 Ω, 5%, 1/4 W	1	RCR07G220JS	81349	
R18	Same as R16				
U1	Integrated Circuit	1	CA3089E	02735	
U2	Integrated Circuit	2	LM318H	27014	
U3	Same as U2				
U4	Integrated Circuit	1	IH5040CPE	32293	

3.5.3.25 Type 794104-2 FM Demodulator (500 kHz BW) REF DESIG PREFIX A3A15 Thru A3A18

REF DESIG	DESCRIPTION	QTY. PER ASSY.	MANUFACTURER'S PART NO.	MFR. CODE	RECM. VENDOR
C1	Capacitor, Ceramic, Disc: 4700 pF, ±20%, 50 V	7	8121-050-651-472M	72982	
C2 Thru C5	Same as C1				
C6	Capacitor, Ceramic, Tubular: 1.5 pF, ±0.1 pF, 500 V	2	301-000-C0K0-159B	72982	
C7	Capacitor, Ceramic, Tubular: 1.5 pF, ±0.25 pF, 500 V	1	301-000-T2K0-159C	72982	
C8	Capacitor, Variable, Ceramic: 2-8 pF, 350 V	1	538-006A2-8	72982	
C9	Capacitor, Ceramic, Tubular: 5.1 pF, ±0.5 pF, 500 V	1	301-000-C0H0-519D	72982	
C10	Capacitor, Variable, Air: 0.8-10 pF, ±250 V	1	5201	91293	
C11	Same as C1				
C12	Same as C6				
C13	Same as C1				
C14	Capacitor, Ceramic, Tubular: 4.7 pF, ±0.25 pF, 500 V	1	301-000-U2J0-479C	72982	
C15	Capacitor, Ceramic, Tubular: 22 pF, ±5%, 500 V	1	301-000-C0G0-220J	72982	
C16	Capacitor, Ceramic, Disc: 0.1 µF, ±20%, 50 V	2	34475-1	14632	
C17	Same as C16				
C18	Capacitor, Ceramic, Disc: 0.47 µF, ±20%, 50 V	2	34452-1	14632	
C19	Same as C18				
C20	Capacitor, Electrolytic, Tantalum: 2.2 µF, ±20%, 35 V	2	196D225X0035JE3	56289	
C21	Capacitor, Ceramic, Disc: 1500 pF, ±10%, 200 V	1	CK06BX152K	81349	
C22	Capacitor, Ceramic, Disc: 2200 pF, ±10%, 200 V	1	CK06BX222K	81349	
C23	Same as C20				
CR1	Diode	2	5082-2800	28480	
CR2	Same as CR1				
L1	Coil, Fixed	1	22295-63	14632	
L2	Coil, Fixed: 18 µH	1	1537-42	99800	
L3	Not Used				
L4	Coil, Fixed: 360 µH	1	2500-06	99800	
L5	Coil, Fixed: 1.2 µH	2	553-3635-38	71279	
L6	Same as L5				
L7	Coil, Fixed: 390 µH	1	2500-08	99800	
R1	Resistor, Fixed, Composition: 220 Ω, 5%, 1/4 W	1	RCR07G221JS	81349	
R2	Resistor, Fixed, Composition: 3.3 Ω, 5%, 1/4 W	1	RCR07G332JS	81349	
R3	Resistor, Fixed, Composition: 100 Ω, 5%, 1/4 W	1	RCR07G101JS	81349	
R4	Resistor, Fixed, Composition: 10 Ω, 5%, 1/4 W	1	RCR07G100JS	81349	
R5	Resistor, Fixed, Composition: 18 kΩ, 5%, 1/4 W	1	RCR07G183JS	81349	
R6	Resistor, Fixed, Composition: 12 kΩ, 5%, 1/4 W	1	RCR07G123JS	81349	
R7	Resistor, Fixed, Composition: 22 kΩ, 5%, 1/4 W	2	RCR07G223JS	81349	
R8	Same as R7				
R9	Resistor, Variable, Film: 20 kΩ, 10%, 1/2 W	1	62PAR20K	73138	
R10	Resistor, Fixed, Film: 100 kΩ, 1%, 1/10 W	2	RN55C1003F	81349	
R11	Resistor, Fixed, Composition: 10 kΩ, 5%, 1/4 W	3	RCR07G103JS	81349	

REF DESIG PREFIX A3A15 Thru A3A18

REF DESIG	DESCRIPTION	QTY. PER ASSY.	MANUFACTURER'S PART NO.	MFR. CODE	RECM. VENDOR
R12	Same as R11				
R13	Same as R10				
R14	Same as R11				
R15	Resistor, Fixed, Composition: 20 kΩ, 5%, 1/4 W	1	RCR07G203JS	81349	
R16	Resistor, Variable, Film: 100 kΩ, 10%, 1/2 W	1	62PAR100K	73138	
R17	Resistor, Fixed, Composition: 470 Ω, 5%, 1/4 W	1	RCR07G471JS	81349	
R18	Resistor, Fixed, Composition: 22 kΩ, 5%, 1/8 W	2	RCR05G223JS	81349	
R19	Same as R18				
T1	Transformer	1	24608-8	14632	
U1	Integrated Circuit	1	CA3011	02735	
U2	Integrated Circuit	1	LM318N	27014	
U3	Integrated Circuit	1	IH5040CPE	32293	
VR1	Voltage Regulator: 3.3 V	1	1N746A	80131	
VR2	Voltage Regulator: 5.1 V	1	1N751A	80131	

3.5.3.26 Type 794104-1 FM Demodulator (1 MHz BW) REF DESIG PREFIX A3A15 Thru A3A18

REF DESIG	DESCRIPTION	QTY. PER ASSY.	MANUFACTURER'S PART NO.	MFR. CODE	RECM. VENDOR
C1	Capacitor, Ceramic, Disc: 4700 pF, ±20%, 50 V	7	8121-050-651-472M	72982	
C2 Thru C5	Same as C1				
C6	Capacitor, Ceramic, Tubular: 1.5 pF, ±0.1 pF, 500 V	2	301-000-C0K0-159B	72982	
C7	Capacitor, Ceramic, Tubular: 1.5 pF, ±0.25 pF, 500 V	1	301-000-T2K0-159C	72982	
C8	Capacitor, Variable, Ceramic: 2-8 pF, 350 V	1	538-006A2-8	72982	
C9	Capacitor, Ceramic, Tubular: 5.1 pF, ±0.5 pF, 500 V	1	301-000-C0H0-519D	72982	
C10	Capacitor, Variable, Air: 0.8-10 pF, ±250 V	1	5201	91293	
C11	Same as C1				
C12	Same as C6				
C13	Same as C1				
C14	Capacitor, Ceramic, Tubular: 4.7 pF, ±0.25 pF, 500 V	1	301-000-U2J0-479C	72982	
C15	Capacitor, Ceramic, Tubular: 22 pF, ±5%, 500 V	1	301-000-C0G0-220J	72982	
C16	Capacitor, Ceramic, Disc: 0.1 µF, ±20%, 50 V	2	34475-1	14632	
C17	Same as C16				
C18	Capacitor, Ceramic, Disc: 0.47 µF, ±20%, 50 V	2	34452-1	14632	
C19	Same as C18				
C20	Capacitor, Electrolytic, Tantalum: 2.2 µF, ±20%, 35 V	2	196D225X0035JE3	56289	
C21	Capacitor, Mica, Dipped: 820 pF, ±5%, 500 V	1	DM15-821J	81349	
C22	Capacitor, Mica, Dipped: 1000 pF, ±2%, 500 v	1	DM15-102J	81349	
C23	Same as C20				
CR1	Diode	2	5082-2800	28480	
CR2	Same as CR1				
L1	Coil, Fixed	1	22295-63	14632	
L2	Coil, Fixed: 18 µH	1	1537-42	99800	
L3	Not Used				
L4	Coil, Fixed: 180 µH	1	1537-88	99800	
L5	Coil, Fixed: 1.2 µH	2	553-3635-38	71279	
L6	Same as L5				
L7	Coil, Fixed: 220 µH	1	1537-92	99800	
R1	Resistor, Fixed, Composition: 220 Ω, 5%, 1/4 W	1	RCR07G221JS	81349	
R2	Resistor, Fixed, Composition: 3.3 Ω, 5%, 1/4 W	1	RCR07G332JS	81349	
R3	Resistor, Fixed, Composition: 100 Ω, 5%, 1/4 W	1	RCR07G101JS	81349	
R4	Resistor, Fixed, Composition: 10 Ω, 5%, 1/4 W	1	RCR07G100JS	81349	
R5	Resistor, Fixed, Composition: 18 kΩ, 5%, 1/4 W	1	RCR07G183JS	81349	
R6	Resistor, Fixed, Composition: 12 kΩ, 5%, 1/4 W	1	RCR07G123JS	81349	
R7	Resistor, Fixed, Composition: 22 kΩ, 5%, 1/4 W	2	RCR07G223JS	81349	
R8	Same as R7				
R9	Resistor, Variable, Film: 20 kΩ, 10%, 1/2 W	2	62PAR20K	73138	
R10	Resistor, Fixed, Film: 100 kΩ, 1%, 1/10 W	2	RN55C1003F	81349	
R11	Resistor, Fixed, Composition: 10 kΩ, 5%, 1/4 W	3	RCR07G103JS	81349	

REF DESIG PREFIX A3A15 Thru A3A18

REF DESIG	DESCRIPTION	QTY. PER ASSY.	MANUFACTURER'S PART NO.	MFR. CODE	RECM. VENDOR
R12	Same as R11				
R13	Same as R10				
R14	Same as R11				
R15	Resistor, Fixed, Composition: 20 kΩ, 5%, 1/4 W	1	RCR07G203JS	81349	
R16	Same as R9				
R17	Resistor, Fixed, Composition: 470 Ω, 5%, 1/4 W	1	RCR07G471JS	81349	
R18	Resistor, Fixed, Composition: 22 kΩ, 5%, 1/8 W	2	RCR05G223JS	81349	
R19	Same as R18				
T1	Transformer	1	24608-8	14632	
U1	Integrated Circuit	1	CA3011	02735	
U2	Integrated Circuit	1	LM318N	27014	
U3	Integrated Circuit	1	IH5040CPE	32293	
VR1	Voltage Regulator: 3.3 V	1	1N746A	80131	
VR2	Voltage Regulator: 5.1 V	1	1N751A	80131	

3.5.3.27 Type 794105-1 FM Demodulator (2 MHz BW) REF DESIG PREFIX A3A15 Thru A3A18

REF DESIG	DESCRIPTION	QTY. PER ASSY.	MANUFACTURER'S PART NO.	MFR. CODE	RECM. VENDOR
C1	Capacitor, Ceramic, Disc: 4700 pF, ±20%, 50 V	5	8121-050-651-472M	72982	
C2	Capacitor, Variable, Air: 0.8-10 pF, 250 V	2	5201	91293	
C3	Same as C1				
C4	Same as C1				
C5	Capacitor, Ceramic, Tubular: 2.7 pF, ±0.25 pF, 500 V	1	301-000C0J0-279C	72982	
C6	Same as C2				
C7	Capacitor, Ceramic, Tubular: 4.7 pF, ±0.25 pF, 500 V	1	301-000U2J0-479C	72982	
C8	Capacitor, Ceramic, Tubular: 3.0 pF, ±0.25 pF, 500 V	1	301-000C0J0-309C	72982	
C9	Not Used				
C10	Not Used				
C11	Capacitor, Mica, Dipped: 430 pF, ±5%, 500 V	1	DM15-431J	72136	
C12	Capacitor, Mica, Dipped: 300 pF, 2%, 500 V	1	CM05FD301G03	81349	
C13	Capacitor, Electrolytic, Tantalum: 2.2 µH, ±20%, 35 V	2	196D225X0035JE3	56289	
C14	Same as C1				
C15	Same as C1				
C16	Capacitor, Ceramic, Disc: 0.1 µF, ±20%, 50 V	2	34475-1	14632	
C17	Same as C16				
C18	Capacitor, Ceramic, Disc: 0.47 µF, ±20%, 50 V	2	34452-1	14632	
C19	Same as C18				
C20	Same as C13				
CR1	Diode	2	1N4446	80131	
CR2	Same as CR1				
L1	Coil, Fixed	1	22295-67	14632	
L2	Coil, Fixed: 18 µH	1	1537-42	99800	
L3	Coil, Fixed: 75 µH	1	1537-70	99800	
L4	Coil, Fixed: 100 µH	1	1537-76	99800	
L5	Coil, Fixed: 1.2 µH	2	553-3635-38	71279	
L6	Same as L5				
R1	Resistor, Fixed, Composition: 220 Ω, 5%, 1/4 W	1	RCR07G221JS	81349	
R2	Resistor, Fixed, Composition: 1.5 kΩ, 5%, 1/4 W	1	RCR07G152JS	81349	
R3	Resistor, Fixed, Composition: 2.7 kΩ, 5%, 1/4 W	1	RCR07G272JS	81349	
R4	Resistor, Fixed, Composition: 22 kΩ, 5%, 1/4 W	2	RCR07G223JS	81349	
R5	Same as R4				
R6	Resistor, Fixed, Composition: 680 Ω, 5%, 1/4 W	4	RCR07G681JS	81349	
R7	Resistor, Fixed, Composition: 4.7 Ω, 5%, 1/4 W	1	RCR07G4R7JS	81349	
R8	Resistor, Fixed, Composition: 10 kΩ, 5%, 1/4 W	1	RCR07G103JS	81349	
R9	Resistor, Variable, Film: 20 kΩ, 10%, 1/2 W	2	62PAR20K	73138	
R10	Resistor, Fixed, Composition: 22 kΩ, 5%, 1/8 W	2	RCR05G223JS	81349	
R11	Resistor, Fixed, Composition: 470 Ω, 5%, 1/4 W	1	RCR07G471JS	81349	
R12	Resistor, Fixed, Film: 100 kΩ, 1%, 1/10 W	2	RN55C1003F	81349	
R13	Same as R12				

REF DESIG PREFIX A3A15 Thru A3A18

REF DESIG	DESCRIPTION	QTY. PER ASSY.	MANUFACTURER'S PART NO.	MFR. CODE	RECM. VENDOR
R14	Same as R9				
R15	Resistor, Fixed, Composition: 22 Ω, 5%, 1/4 W	1	RCR07G220JS	81349	
R16	Same as R10				
T1	Transformer	1	24608-9	14632	
U1	Integrated Circuit	1	CA3011	02735	
U2	Integrated Circuit	1	LM318H	27014	
U3	Integrated Circuit	1	IH5040CPE	32293	
VR1	Voltage Regulator: 5.1 V	1	1N751A	80131	

3.5.3.28 Type 794105-2 FM Demodulator (4 MHz BW) REF DESIG PREFIX A3A15 Thru A3A18

REF DESIG	DESCRIPTION	QTY. PER ASSY.	MANUFACTURER'S PART NO.	MFR. CODE	RECM. VENDOR
C1	Capacitor, Ceramic, Disc: 4700 pF, ±20%, 50 v	5	8121-050-651-472M	72982	
C2	Capacitor, Variable, Air: 0.8-10 pF, 250 V	2	5201	91293	
C3	Same as C1				
C4	Same as C1				
C5	Capacitor, Ceramic, Tubular: 2.7 pF, ±0.25 pF, 500 V	1	301-000C0J0-279C	72982	
C6	Same as C2				
C7	Capacitor, Ceramic, Tubular: 4.7 pF, ±0.25 pF, 500 V	1	301-000U2J0-479C	72982	
C8	Capacitor, Ceramic, Tubular: 6.8 pF, ±0.25 pF, 500 V	1	301-000C0H0-689C	72982	
C9	Not Used				
C10	Not Used				
C11	Capacitor, Mica, Dipped: 130 pF, ±2%, 500 V	1	CM05FD131G03	81349	
C12	Capacitor, Mica, Dipped: 180 pF, ±2%, 500 V	1	CM05FD181G03	81349	
C13	Capacitor, Electrolytic, Tantalum: 2.2 µH, ±20%, 35 V	2	196D225X0035JE3	56289	
C14	Same as C1				
C15	Same as C1				
C16	Capacitor, Ceramic, Disc: 0.1 µF, ±20%, 50 V	2	34475-1	14632	
C17	Same as C16				
C18	Capacitor, Ceramic, Disc: 0.47 µF, ±20%, 50 V	2	34452-1	14632	
C19	Same as C18				
C20	Same as C13				
CR1	Diode	2	1N4446	80131	
CR2	Same as CR1				
L1	Coil, Fixed	1	22295-67	14632	
L2	Coil, Fixed: 18 µH	1	1537-42	99800	
L3	Coil, Fixed: 39 µH	1	1537-56	99800	
L4	Coil, Fixed: 47 µH	1	1537-60	99800	
L5	Coil, Fixed: 1.2 µH	2	553-3635-38	71279	
L6	Same as L5				
R1	Resistor, Fixed, Composition: 220 Ω, 5%, 1/4 W	1	RCR07G221JS	81349	
R2	Resistor, Fixed, Composition: 1.5 kΩ, 5%, 1/4 W	1	RCR07G152JS	81349	
R3	Resistor, Fixed, Composition: 2.7 kΩ, 5%, 1/4 W	1	RCR07G272JS	81349	
R4	Resistor, Fixed, Composition: 22 kΩ, 5%, 1/4 W	2	RCR07G223JS	81349	
R5	Same as R4				
R6	Resistor, Fixed, Composition: 1.8 kΩ, 5%, 1/4 W	1	RCR07G182JS	81349	
R7	Resistor, Fixed, Composition: 4.7 Ω, 5%, 1/4 W	1	RCR07G4R7JS	81349	
R8	Resistor, Fixed, Composition: 10 kΩ, 5%, 1/4 W	1	RCR07G103JS	81349	
R9	Resistor, Variable, Film: 20 kΩ, 10%, 1/2 W	2	62PAR20K	73138	
R10	Resistor, Fixed, Composition: 22 kΩ, 5%, 1/8 W	2	RCR05G223JS	81349	
R11	Resistor, Fixed, Composition: 470 Ω, 5%, 1/4 W	1	RCR07G471JS	81349	
R12	Resistor, Fixed, Film: 100 kΩ, 1%, 1/10 W	2	RN55C1003F	81349	
R13	Same as R12				

REF DESIG PREFIX A3A15 Thru A3A18

REF DESIG	DESCRIPTION	QTY. PER ASSY.	MANUFACTURER'S PART NO.	MFR. CODE	RECM. VENDOR
R14	Same as R9				
R15	Resistor, Fixed, Composition: 22 Ω, 5%, 1/4 W	1	RCR07G220JS	81349	
R16	Same as R10				
T1	Transformer	1	24608-9	14632	
U1	Integrated Circuit	1	CA3011	02735	
U2	Integrated Circuit	1	LM318H	27014	
U3	Integrated Circuit	1	IH5040CPE	32293	
VR1	Voltage Regulator: 5.1 V	1	1N751A	80131	

3.5.4 TYPE 794082 SYNTHESIZER, MOTHER BOARD REF DESIG PREFIX A4

REF DESIG	DESCRIPTION	QTY. PER ASSY.	MANUFACTURER'S PART NO.	MFR. CODE	RECM. VENDOR
A1	Reference Generator	1	794098-1	14632	
A2	First LO Synthesizer	1	774003	14632	
A3	Second LO Synthesizer	1	774004	14632	
A4	Third LO Synthesizer	1	774005	14632	
A5	BFO (Option)	1	794149	14632	
C1	Capacitor, Ceramic, Disc: 0.01 µF	62	34453-1	14632	
C2 Thru C62	Same as C1				
J1	Combination, Post, Feed-thru: 6 positions	2	270618-2	14632	
P1	Flex Cable	1	34832-2	14632	
P2	Flex Cable	1	34832-1	14632	
P3	Connector, Housing Plug	4	87499-5	00779	
P4 Thru P6	Same as P3				
U1	Voltage Regulator: +5 V	2	7805UC	07263	
U2	Same as U1				
W1	Cable Assembly	1	370395-1	14632	
W2	Cable Assembly	1	370395-2	14632	
XA1	Housing	5	117798-3	00779	
XA2 Thru XA5	Same as XA1				

3.5.4.1 Type 794098-1 Reference Generator REF DESIG PREFIX A4A1

REF DESIG	DESCRIPTION	QTY. PER ASSY.	MANUFACTURER'S PART NO.	MFR. CODE	RECM. VENDOR
C1	Capacitor, Ceramic, Disc: 0.1 µF, ±20%, 50 V	2	34475-1	14632	
C2	Capacitor, Mica, Dipped: 820 pF, ±5%, 300 V	1	DM15-821J	72136	
C3	Capacitor, Ceramic, Disc: 0.01 µF, ±20%, 50 V	5	34453-1	14632	
C4	Capacitor, Ceramic, Disc: 1000 pF, GMV, 500 V	1	B-GP1000PFP	91418	
C5	Capacitor, Mica, Dipped: 1000 pF, ±5%, 1000 V	1	DM15-102J	72136	
C6	Not Used				
C7	Same as C1				
C8	Same as C3				
C9	Capacitor, Ceramic, Disc: 0.47 µF, ±20%, 50 V	1	34452-1	14632	
C10	Capacitor, Electrolytic, Tantalum: 22 µF, ±20%, 15 V	1	196D226X0015KE3	56289	
C11	Not Used				
C12	Capacitor, Mica, Dipped: 270 pF, ±2%, 500 V	2	CM05FD271G03	81349	
C13	Capacitor, Ceramic, Disc: 0.47 µF, 20%, 100 V	1	8131M100-651-474M	72982	
C14	Capacitor, Ceramic, Disc: .01 µF, 20%, 200 V	1	8131A200Z5U103M	72982	
C15	Capacitor, Variable, Ceramic: 2-8 pF, 350 V	1	538-006A2-8	72982	
C16	Same as C3				
C17	Capacitor, Mica, Dipped: 18 pF, ±5%, 500 V	1	CM04CD180J03	81349	
C18	Capacitor, Electrolytic, Tantalum: 220 µF, 20%, 10 V	2	196D227X0010TE4	56289	
C19	Capacitor, Mica, Dipped: 220 pF, ±2%, 500 V	2	CM05FD221G03	81349	
C20	Same as C19				
C21	Same as C3				
C22	Same as C3				
C23	Same as C12				
C24	Same as C18				
CR1	Diode	1	U11-3102	52673	
CR2	Diode	1	1N4446	80131	
E1	Terminal, Miniature	1	201081	88245	
E2-E5	Terminal Forked	4	140-1941-02-01	71279	
JW1	Cable, Coax	1	RG188U	80058	
L1	Coil, Fixed: 8.2 µH	1	1537-34	99800	
L2	Coil, Fixed: 100 µH	1	553-3635-25	71279	
L3	Coil, Fixed: 1.5 µH	1	1537-16	99800	
Q1	Transistor	5	2N2222A	80131	
Q2 Thru Q5	Same as Q1				
R1	Resistor, Fixed, Composition: 5.6 kΩ, 5%, 1/4 W	2	RCR07G562JS	81349	
R2	Same as R1				
R3	Resistor, Fixed, Composition: 47 Ω, 5%, 1/4 W	2	RCR07G470JS	81349	
R4	Resistor, Fixed, Composition: 1 kΩ, 5%, 1/4 W	4	RCR07G102JS	81349	
R5	Same as R4				
R6	Resistor, Fixed, Composition: 100 Ω, 5%, 1/4 W	3	RCR07G101JS	81349	

REF DESIG PREFIX A4A1

REF DESIG	DESCRIPTION	QTY. PER ASSY.	MANUFACTURER'S PART NO.	MFR. CODE	RECM. VENDOR
R7	Resistor, Fixed, Composition: 120 Ω, 5%, 1/4 W	3	RCR07G121JS	81349	
R8	Same as R7				
R9	Same as R7				
R10	Resistor, Fixed, Composition: 2.7 kΩ, 5%, 1/4 W	1	RCR07G272JS	81349	
R11	Resistor, Fixed, Composition: 270 Ω, 5%, 1/4 W	2	RCR07G271JS	81349	
R12	Resistor, Fixed, Composition: 22 Ω, 5%, 1/4 W	2	RCR07G220JS	81349	
R13	Same as R6				
R14	Resistor, Fixed, Composition: 18kΩ, 5%, 1/4 W	1	RCR07G183JS	81349	
R15	Resistor, Fixed, Composition: 10kΩ, 5%, 1/4 W	4	RCR07G103JS	81349	
R16	Resistor, Fixed, Composition: 150 Ω, 5%, 1/4 W	3	RCR07G151JS	81349	
R17	Resistor, Fixed, Composition: 2 kΩ, 5%, 1/4 W	1	RCR07G202JS	81349	
R18	Resistor, Fixed, Composition: 22 kΩ, 5%, 1/4 W	1	RCR07G223JS	81349	
R19	Resistor, Fixed, Composition: 5.1kΩ, 5%, 1/4 W	1	RCR07G512JS	81349	
R20	Same as R4				
R21	Same as R15				
R22	Same as R4				
R23	Same as R15				
R24	Resistor, Fixed, Composition: 220Ω, 5%, 1/4 W	1	RCR07G221JS	81349	
R25	Resistor, Fixed, Composition: 27 Ω, 5%, 1/4 W	1	RCR07G270JS	81349	
R26	Same as R11				
R27	Same as R12				
R28	Not Used				
R29	Same as R6				
R30	Resistor, Fixed, Composition: 470 Ω, 5%, 1/4 W	1	RCR07G471JS	81349	
R31	Same as R4				
R32	Resistor, Variable, Film: 100 Ω, 10%, 1/2 W	1	62PAR100	73138	
R33	Not Used				
R34	Same as R15				
R35	Resistor, Fixed, Composition: 56 Ω, 5%, 1/4 W	1	RCR07G560JS	81349	
T1	Transformer	1	22295-68	14632	
U1	Crystal Oscillator/2 MHz	1	841038	14632	
U2	Integrated Circuit	1	SN75140N	01295	
U3	Integrated Circuit	1	SN74125N	01295	
U4	Integrated Circuit	3	SN74LS197N	01295	
U5	Same as U4				
U6	Same as U4				
U7	Integrated Circuit	1	SN74LS196N	01295	
U8	Integrated Circuit	1	11C44DC	35342	
U9	Integrated Circuit	1	SN74LS74N	01295	
U10	Integrated Circuit	1	7805UC	07263	

REF DESIG PREFIX A4A1

REF DESIG	DESCRIPTION	QTY. PER ASSY.	MANUFACTURER'S PART NO.	MFR. CODE	RECM. VENDOR
Y1	Crystal, Quartz: 10.7 MHz	1	CR64/U/10.7 MHz	81349	
Y2	Same as Y1				

3.5.4.2 Type 774003-1 1st LO Synthesizer REF DESIG PREFIX A4A2

REF DESIG	DESCRIPTION	QTY. PER ASSY.	MANUFACTURER'S PART NO.	MFR. CODE	RECM. VENDOR
A1	Prescaler, LO Buffer, Amplifier	1	370280-1	14632	
C1	Capacitor, Ceramic, Disc: 0.1 µF, ±20%, 50 V	4	34475-1	14632	
C2	Capacitor, Ceramic, Disc: 0.47 pF, ±20%, 50 V	3	34452-1	14632	
C3	Capacitor, Ceramic, Disc: 0.01 µF, 20%, 100 V	10	C023B101F103M	56289	
C4	Same as C3				
C5	Same as C3				
C6	Not Used				
C7	Same as C2				
C8	Same as C1				
C9	Same as C3				
C10	Same as C1				
C11	Same as C3				
C12	Capacitor, Electrolytic, Tantalum: 100 µF, ±20%, 20 V	7	196D107X0020TE4	56289	
C13	Same as C12				
C14	Capacitor, Electrolytic, Tantalum: 22 µF, ±20%, 10 V	1	196D226X0010JE3	56289	
C15	Same as C1				
C16	Capacitor, Mica, Dipped: 150 pF, ±2%, 500 V	1	CM05FD151G03	81349	
C17 Thru C20	Same as C12				
C21 Thru C25	Same as C3				
C26	Not Used				
C27	Same as C2				
C28	Capacitor, Ceramic, Disc: 0.01 µF, 10%, 200 V	2	CK06BX103K	81349	
C29	Capacitor, Ceramic, Disc: 0.015 µF, 10%, 100 V	1	CK06BX153K	81349	
C30	Same as C28				
C31	Same as C12				
CR1	Diode	2	1N995	80131	
CR2	Same as CR1				
CR3	Diode	7	1N4446	80131	
CR4 Thru CR9	Same as CR3				
DS1	Diode, LED	2	5082-4684	28480	
DS2	Same as DS1				
E1	Terminal, Forked	15	140-1941-02-01	71279	
E2 Thru E15	Same as E1				
FB1	Ferrite Bead	6	56-590-65-4A	02114	

REF DESIG PREFIX A4A2

REF DESIG	DESCRIPTION	QTY. PER ASSY.	MANUFACTURER'S PART NO.	MFR. CODE	RECM. VENDOR
FB2 Thru FB6	Same as FB1				
L1	Coil, Fixed: 2.2 mH, 10%	2	553-3635-41	71279	
L2	Coil, Fixed	1	20681-180	14632	
L3	Coil, Fixed	1	16209-4	14632	
L4	Same as L1				
R1	Resistor, Fixed, Composition: 470 Ω, 5%, 1/4 W	4	RCR07G471JS	81349	
R2	Same as R1				
R3	Not Used				
R4	Same as R1				
R5	Same as R1				
R6	Resistor, Fixed, Composition: 10 kΩ, 5%, 1/4 W	4	RCR07G103JS	81349	
R7	Resistor, Fixed, Composition: 10 Ω, 5%, 1/4 W	1	RCR07G100JS	81349	
R8	Resistor, Fixed, Composition: 4.7 kΩ, 5%, 1/4 W	2	RCR07G472JS	81349	
R9	Resistor, Trim, Film: 10 kΩ, 10%, 1/2 W	1	62PAR10K	73138	
R10	Resistor, Fixed, Composition: 330 Ω, 5%, 1/8 W	1	RCR05G331JS	81349	
R11	Same as R6				
R12	Resistor, Fixed, Composition: 100 Ω, 5%, 1/4 W	13	RCR07G101JS	81349	
R13 Thru R23	Same as R12				
R24	Same as R6				
R25	Not Used				
R26	Same as R8				
R27	Same as R12				
R28	Resistor, Fixed, Composition: 2.2 kΩ, 5%, 1/4 W	1	RCR07G222JS	81349	
R29	Resistor, Fixed, Composition: 1.0 kΩ, 5%, 1/4 W	6	RCR07G102JS	81349	
R30 Thru R34	Same as R29				
R35	Same as R6				
U1	Integrated Circuit	1	MC12014L	04713	
U2	Integrated Circuit	2	SN74LS74N	01295	
U3	Integrated Circuit	2	SN54LS190J	01295	
U4	Integrated Circuit	1	SN74LS196N	01295	
U5	Same as U3				
U6	Integrated Circuit	1	841050	14632	
U7	Integrated Circuit	1	11C44DC	07263	
U8	Integrated Circuit	1	CA6741T	02735	
U9	Integrated Circuit	1	841049	14632	
U10	Integrated Circuit	1	SN74LS74N	01295	

REF DESIG PREFIX A4A2

REF DESIG	DESCRIPTION	QTY. PER ASSY.	MANUFACTURER'S PART NO.	MFR. CODE	RECM. VENDOR
U11	Integrated Circuit	2	MM74C374N	27014	
U12	Same as U11				
U13	Integrated Circuit	2	LM324N	27014	
U14	Same as U13				

3.5.4.2.1.1 Part 370405-1 LO Buffer Amplifier Assembly REF DESIG PREFIX A4A2A1A1

REF DESIG	DESCRIPTION	QTY. PER ASSY.	MANUFACTURER'S PART NO.	MFR. CODE	RECM. VENDOR
C1	Capacitor, Ceramic, Disc: 0.01 µF, ±20%, 50 V	11	34453-1	14632	
C2 Thru C6	Same as C1				
C7	Capacitor, Ceramic, Disc: 1000 pF, ±5%, 100 V	2	8121-100C0G0-102J	72982	
C8	Same as C7				
C9	Capacitor, Electrolytic, Tantalum: 100 µF, ±20%, 20 V	1	196D107X0020TE4	56289	
C10	Capacitor, Ceramic, Chip: 3.6 pF, ±0.25 pF, 500 V	1	ATC700B3R6CP500X	29990	
C11	Capacitor, Ceramic, Chip: 1000 pF, ±20%, 500 V	4	ATC700B102MP500X	29990	
C12	Capacitor, Ceramic, Chip: 91 pF, ±5%, 500 V	1	ATC700B910JP500X	29990	
C13	Same as C11				
C14	Capacitor, Ceramic, Chip: 10 pF, 2%, 500 V, NPO	1	ATC700B100GP500X	29990	
C15	Capacitor, Electrolytic, Tantalum: 47 µF, ±20%, 20 V	2	196D476X0020PE4	56289	
C16	Same as C1				
C17	Same as C1				
C18	Capacitor, Ceramic, Chip: 470 pF, ±10%, 200 V	8	ATC700B471KP200	29990	
C19	Capacitor, Variable, Air: .6-4.5 pF, 500 V	3	M5F	18736	
C20	Same as C19				
C21	Same as C19				
C22	Capacitor, Variable, Ceramic: 6-35 pF, N750-TC, 250 V	1	9410-3	91293	
C23	Same as C11				
C24	Same as C11				
C25 Thru C27	Same as C18				
C28	Same as C1				
C29	Capacitor, Electrolytic, Tantalum: 220 µF, ±20%, 10 V	1	196D227X0010TE4	56289	
C30 Thru C33	Same as C18				
C34	Capacitor, Ceramic, Disc: 0.1 µF, ±20%, 50 V	1	34475-1	14632	
C35	Capacitor, Ceramic, Chip: 200 pF, ±5%, 300 V	1	ATC700B201JP300X	29990	
C36	Same as C1				
C37	Same as C15				
C38	Same as C1				
C39	Capacitor, Ceramic, Chip: .5 pF, ±.1 pF, 500 V	1	ATC100BOR5BP	29990	
CR1	Diode	2	GC4211-15	50101	
CR2	Same as CR1				
CR3	Diode	4	MPN3401	04713	
CR4	Same as CR3				
CR5	Same as CR3				
CR6	Same as CR3				
CR7	Diode	3	BB105B	25088	

REF DESIG PREFIX A4A2A1A1

REF DESIG	DESCRIPTION	QTY. PER ASSY.	MANUFACTURER'S PART NO.	MFR. CODE	RECM. VENDOR
CR8	Same as CR7				
CR9	Same as CR7				
CR10	Same as CR3				
E1	Terminal	15	140-1941-02-01	71279	
E2 Thru E15	Same as E1				
FB1	Ferrite Bead	7	P5-1288	01037	
FB2 Thru FB7	Same as FB1				
L1	Inductor	2	22292-10	14632	
L2	Coil, Fixed: 18 µH	2	1025-50	99800	
L3	Same as L1				
L4	Same as L2				
L5	Coil, Fixed: 4.7 µH	1	1025-36	99800	
Q1	Transistor	1	2N3904	80131	
Q2	Transistor	1	2N4921	80131	
R1	Resistor, Fixed, Composition: 1 kΩ, 5%, 1/8 W	5	RCR05G102JS	81349	
R2	Resistor, Fixed, Composition: 680 Ω, 5%, 1/8 W	5	RCR05G681JS	81349	
R3	Same as R2				
R4	Same as R1				
R5	Same as R2				
R6	Same as R2				
R7	Resistor, Fixed, Composition: 47 Ω, 5%, 1/8 W	2	RCR05G470JS	81349	
R8	Resistor, Fixed, Composition: 4.7 kΩ, 5%, 1/8 W	2	RCR05G472JS	81349	
R9	Same as R7				
R10	Same as R8				
R11	Same as R1				
R12	Same as R1				
R13	Resistor, Fixed, Composition: 150 Ω, 5%, 1/4 W	1	RCR07G151JS	81349	
R14	Resistor, Fixed, Composition: 100 Ω, 5%, 1/8 W	5	RCR07G101JS	81349	
R15	Same as R2				
R16	Resistor, Fixed, Composition: 15 Ω, 5%, 1/8 W	4	RCR05G150JS	81349	
R17	Same as R16				
R18	Same as R16				
R19	Resistor, Fixed, Composition: 330 Ω, 5%, 1/8 W	4	RCR05G331JS	81349	
R20	Same as R16				
R21	Same as R19				
R22	Same as R14				
R23	Resistor, Fixed, Composition: 68 Ω, 5%, 1/8 W	3	RCR05G680JS	81349	
R24	Same as R14				

REF DESIG PREFIX A4A2A1A1

REF DESIG	DESCRIPTION	QTY. PER ASSY.	MANUFACTURER'S PART NO.	MFR. CODE	RECM. VENDOR
R25	Same as R23				
R26	Same as R14				
R27	Same as R19				
R28	Resistor, Fixed, Composition: 150 Ω, 5%, 1/8 W	2	RCR05G151JS	81349	
R29	Same as R13				
R30	Same as R28				
R31	Resistor, Fixed, Composition: 470 Ω, 5%, 1/8 W	4	RCR05G471JS	81349	
R32	Same as R31				
R33	Same as R31				
R34	Same as R31				
R35	Same as R31				
R36	Same as R19				
R37	Same as R23				
R38	Resistor, Fixed, Composition: 33 Ω, 5%, 1/8 W	1	RCR05G330JS	81349	
R39	Same as R14				
R40	Same as R1				
R41	Resistor, Fixed, Composition: 270 Ω, 5%, 1/4 W	1	RCR07G271JS	81349	
U1	Amplifier	1	AH28	31091	
U2	Integrated Circuit	2	MWA320	04713	
U3	Integrated Circuit	1	MC12013P	04713	
U4	Integrated Circuit	1	SP8617B	52648	
U5	Same as U2				

3.5.4.3 Type 774004-1 2nd LO Synthesizer REF DESIG PREFIX A4A3

REF DESIG	DESCRIPTION	QTY. PER ASSY.	MANUFACTURER'S PART NO.	MFR. CODE	RECM. VENDOR
A1	Oscillator, Mixer	1	370281	14632	
C1	Capacitor, Ceramic, Disc: 1000 pF, GMV, 500 V	4	SM(1000 pF)P	91418	
C2	Same as C1				
C3	Capacitor, Ceramic, Disc: 470 pF, ±20%, 1000 V	2	B/470pF/M	91418	
C4	Same as C1				
C5	Capacitor, Electrolytic, Tantalum: 4.7 µF, ±10%, 10 V	1	CS13BC475K	81349	
C6	Capacitor, Ceramic, Mono: 470 pF, 5%, 100 V	1	8121-100C0G0-471J	72982	
C7	Capacitor, Ceramic, Disc: 0.1 µF, ±20%, 50 V	9	34475-1	14632	
C8	Same as C7				
C9	Same as C7				
C10	Same as C1				
C11	Same as C7				
C12	Same as C7				
C13	Not Used				
C14	Not Used				
C15	Capacitor, Ceramic, Disc: 0.01 µF, ±20%, 50 V	2	34453-1	14632	
C16	Same as C7				
C17	Capacitor, Electrolytic, Tantalum: 100 µF, ±20%, 15 V	1	196D107X0020TE4	56289	
C18	Same as C7				
C19	Same as C15				
C20	Same as C7				
C21	Same as C7				
C22	Capacitor, Electrolytic, Tantalum: 22 µF, ±20%, 10 V	4	196D226X0010JE3	56289	
C23	Same as C22				
C24	Same as C22				
C25	Same as C3				
C26	Capacitor, Electrolytic, Tantalum: 4.7 µF, ±20%, 20 V	1	196D476X0020PE4	56289	
C27	Capacitor, Electrolytic, Tantalum: 4.7 µF, 20%, 35 V	1	196D475X0035JE3	56289	
C28	Same as C22				
C29	Capacitor, Electrolytic, Tantalum: 200 µF, ±20%, 15 V	1	MTP207M015P1C	76055	
CR1	Diode	1	BB105B	25088	
CR2	Diode	3	1N995	80131	
CR3	Same as CR2				
CR4	Same as CR2				
CR5	Not Used				
CR6	Not Used				
CR7	Not Used				
CR8	Not Used				
CR9	Diode	2	1N995	80131	
CR10	Same as CR9				
DS1	Diode, LED	4	5082-4684	28480	

REF DESIG PREFIX A4A3

REF DESIG	DESCRIPTION	QTY. PER ASSY.	MANUFACTURER'S PART NO.	MFR. CODE	RECM. VENDOR
DS2 Thru DS4	Same as DS1				
E1	Terminal	8	140-1941-02-01	71279	
E2 Thru E8	Same as E1				
FB1	Ferrite Bead	2	56-590-65-4A	02114	
FB2	Same as FB1				
L1	Coil, Fixed: 10 µH	1	553-3635-49	71279	
L2	Coil, Fixed	1	21210-186	14632	
L3	Coil, Fixed	2	20681-185	14632	
L4	Same as L3				
L5	Coil, Fixed	1	16209-4	14632	
L6	Coil, Fixed	1	2500-28	99800	
L7	Coil, Fixed	1	1025-28	99800	
Q1	Transistor	1	2N2904	80131	
Q2	Transistor	4	2N3904	80131	
Q3 Thru Q5	Same as Q2				
R1	Resistor, Fixed, Composition: 1.0 kΩ, 5%, 1/4 W	6	RCR07G102JS	81349	
R2	Same as R1				
R3	Resistor, Fixed, Composition: 470 Ω, 5%, 1/4 W	4	RCR07G471JS	81349	
R4	Same as R3				
R5	Resistor, Fixed, Composition: 330 Ω, 5%, 1/4 W	4	RCR07G331JS	81349	
R6	Resistor, Fixed, Composition: 220 Ω, 5%, 1/4 W	3	RCR07G221JS	81349	
R7	Resistor, Fixed, Composition: 820 Ω, 5%, 1/4 W	2	RCR07G821JS	81349	
R8	Resistor, Variable, Film: 10 kΩ, 10%, 1/2 W	1	62PR10K	73138	
R9	Same as R1				
R10	Same as R1				
R11	Same as R1				
R12	Same as R5				
R13	Same as R3				
R14	Same as R3				
R15	Same as R1				
R16	Resistor, Variable, Film: 2 kΩ, 10%, 1/2 W	1	62PR2K	73138	
R17	Same as R6				
R18	Same as R6				
R19	Not Used				
R20	Resistor, Fixed, Composition: 100 Ω, 5%, 1/8 W	9	RCR05G101JS	81349	
R21 Thru R27	Same as R20				

REF DESIG PREFIX A4A3

REF DESIG	DESCRIPTION	QTY. PER ASSY.	MANUFACTURER'S PART NO.	MFR. CODE	RECM. VENDOR
R28	Resistor, Fixed, Composition: 10 kΩ, 5%, 1/4 W	2	RCR07G103JS	81349	
R29	Same as R28				
R30	Same as R5				
R31	Same as R5				
R32	Same as R20				
R33	Resistor, Fixed, Composition: 22 kΩ, 5%, 1/4 W	1	RCR07G222JS	81349	
R34	Same as R7				
U1	Integrated Circuit	1	MC1648L	04713	
U2	Integrated Circuit	2	MC10138L	04713	
U3	Same as U2				
U4	Integrated Circuit	2	11C44DC	07263	
U5	Integrated Circuit	3	SN54LS190J	01295	
U6	Integrated Circuit	1	MC12014L	04713	
U7	Integrated Circuit	1	MC12013P	04713	
U8	Same as U5				
U9	Same as U5				
U10	Same as U4				
U11	Integrated Circuit	1	MM74C374N	27014	

3.5.4.3.1 Type 370281 Oscillator/Mixer REF DESIG PREFIX A4A3A1

REF DESIG	DESCRIPTION	QTY. PER ASSY.	MANUFACTURER'S PART NO.	MFR. CODE	RECM. VENDOR
A1	VCO/Buffer	1	270347	14632	
A2	4.6 - 5.6 MHz Amplifier	1	270348	14632	
C1	Capacitor, Ceramic, Feedthru: 1000 pF, GMV, 500 V	3	54-794-009-102W	33095	
C2	Same as C1				
C3	Same as C1				
C4	Capacitor, Ceramic, Feedthru: 33 pF, ±10%, 500 V	1	54-794-001-3301	33095	
C5	Capacitor, Ceramic, Disc: 15 pF, ±5%, 100 V	1	8111-100C0G0-150J	81349	
E1	Terminal, Feed-Thru, Insulated	2	SFU-16	04013	
E2	Same as E1				
FB1	Ferrite Bead	2	56-590-65/4A	02114	
L1	Coil, Fixed: 100 µH, 5%	1	1537-76	99800	
L2	Coil, Fixed: 33 µH, 5%	1	1537-52	99800	
L3	Not Used				
L4	Not Used				
L5	Coil, Fixed: 2.2 µH	1	1025-28	99800	
R1	Resistor, Fixed, Composition: 47 Ω, 5%, 1/4 W	1	RCR07G470JS	81349	
R2	Not Used				
R3	Resistor, Fixed, Composition: 100 Ω, 5%, 1/4 W	2	RCR07G101JS	81349	
R4	Same as R3				
R5	Resistor, Fixed, Composition: 68 Ω, 5%, 1/4 W	2	RCR07G680JS	81349	
R6	Same as R5				

3.5.4.3.1.1 Part 270347-1 VCO/Buffer REF DESIG PREFIX A4A3A1A1

REF DESIG	DESCRIPTION	QTY. PER ASSY.	MANUFACTURER'S PART NO.	MFR. CODE	RECM. VENDOR
C1	Capacitor, Ceramic, Chip: 470 pF, ±10%, 200 V	10	C17AA471K200T	55153	
C2	Same as C1				
C3	Capacitor, Ceramic, Chip: 6.8 pF, ±0.25 pF, 500 V	2	C17AH6R8C500T	55153	
C4	Not Used				
C5	Not Used				
C6	Not Used				
C7	Capacitor, Variable, Air: 6-4.5 pF, 500 V	2	M5F	18736	
C8	Same as C7				
C9	Same as C1				
C10	Capaitor, Ceramic, Disc: 0.47 µF, ±20%, 50 V	1	34452-1	14632	
C11	Capacitor, Composition, Tubular: 0.62 pF, ±10%, 500 V	1	QC0.62PFK	95121	
C12 Thru C18	Same as C1				
C19	Same as C3				
C20	Capacitor, Ceramic, Disc: 0.1 µF, ±20%, 50 V	1	34475-1	14632	
C21	Capacitor, Ceramic, Tubular: 2.2 pF, ±0.25 pF, 500 V	1	301-000U2J0-229C	72982	
C22	Capacitor, Electrolytic, Tantalum: 100 µF, ±20%, 20 V	1	196D107X0020TE4	56289	
CR1	Diode	1	BB105B	25088	
L1	Coil, Fixed: .68 µH	3	1025-16	99800	
L2	Coil, Fixed	3	1129-46	14632	
L3	Same as L1				
L4	Same as L2				
L5	Same as L1				
L6	Same as L2				
L7	Coil, Fixed	1	1129-28	14632	
Q1	Transistor	4	BFR96	73445	
Q2 Thru Q4	Same as Q1				
R1	Resistor, Fixed, Composition: 1.0 kΩ, 5%, 1/8 W	4	RCR05G102JS	81349	
R2	Resistor, Fixed, Composition: 4.7 kΩ, 5%, 1/8 W	5	RCR05G472JS	81349	
R3	Resistor, Fixed, Composition: 8.2 Ω, 5%, 1/8 W	1	RCR05G8R2JS	81349	
R4	Resistor, Fixed, Composition: 180 Ω, 5%, 1/8 W	1	RCR05G181JS	81349	
R5	Same as R1				
R6	Same as R2				
R7	Resistor, Fixed, Composition: 100 Ω, 5%, 1/8 W	3	RCR05G101JS	81349	
R8	Resistor, Fixed, Composition: 220 Ω, 5%, 1/8 W	3	RCR05G221JS	81349	
R9	Resistor, Fixed, Composition: 2.7 Ω, 5%, 1/8 W	4	RCR05G2R7JS	81349	
R10	Same as R9				
R11	Same as R1				
R12	Same as R2				

REF DESIG PREFIX A4A3A1A1

REF DESIG	DESCRIPTION	QTY. PER ASSY.	MANUFACTURER'S PART NO.	MFR. CODE	RECM. VENDOR
R13	Same as R8				
R14	Same as R9				
R15	Resistor, Fixed, Composition: 27 Ω, 5%, 1/8 W	2	RCR07G270JS	81349	
R16	Same as R1				
R17	Same as R2				
R18	Same as R7				
R19	Same as R8				
R20	Same as R9				
R21	Same as R7				
R22	Same as R2				
R23	Same as R15				

3.5.4.3.1.2 Part 270348 4.6 - 5.6 MHz Amplifier REF DESIG PREFIX A4A3A1A2

REF DESIG	DESCRIPTION	QTY. PER ASSY.	MANUFACTURER'S PART NO.	MFR. CODE	RECM. VENDOR
C1	Capacitor, Ceramic, Disc: 1000 pF, GMV, 500 V	1	SM(1000 pF)P	91418	
C2	Capacitor, Ceramic, Disc: 5000 pF, 20%, 100 V	2	C023B101E502M	56289	
C3	Capacitor, Ceramic, Disc: 0.1 µF, 20%, 100 V	1	8131M100-651-104M	72982	
C4	Same as C2				
E1	Terminal	4	140-1941-02-01	71279	
E2 Thru E4	Same as E1				
Q1	Transistor	1	2N2222A	80131	
R1	Resistor, Fixed, Composition: 100 Ω, 5%, 1/8 W	1	RCR05G101JS	81349	
R2	Resistor, Fixed, Composition: 2 kΩ, 5%, 1/8 W	2	RCR05G202JS	81349	
R3	Same as R2				
R4	Resistor, Fixed, Composition: 8.2 kΩ, 5%, 1/8 W	1	RCR05G822JS	81349	
R5	Resistor, Fixed, Composition: 5.1 kΩ, 5%, 1/8 W	1	RCR05G512JS	81349	
R6	Resistor, Fixed, Composition: 510 Ω, 5%, 1/8 W	1	RCR05G511JS	81349	
U1	Mixer, Double Balanced	1	TFM-2	15542	
U2	Integrated Circuit	1	N5733K	18324	

3.5.4.4 Type 774005-1 3rd Synthesizer REF DESIG PREFIX A4A4

REF DESIG	DESCRIPTION	QTY. PER ASSY.	MANUFACTURER'S PART NO.	MFR. CODE	RECM. VENDOR
A1	3rd Synthesizer	1	370282	14632	
C1	Capacitor, Ceramic, Disc: 15 µF, ±20%, 15 V	1	196D156X0015JE3	56289	
C2	Capacitor, Ceramic, Disc: 0.01 µF, 20%, 50 V	2	34453-1	14632	
C3	Capacitor, Ceramic, Disc: 1000 pF, GMV, 500 V	2	SM(1000 pF)P	91418	
C4	Capacitor, Ceramic, Disc: 0.1 µF, ±20%, 50 V	8	34475-1	14632	
C5	Same as C4				
C6	Capacitor, Ceramic, Disc: 470 pF, 20%, 1000 V	2	B470PFM	91418	
C7	Same as C6				
C8	Same as C3				
C9	Capacitor, Electrolytic, Tantalum: 4.7 µF, 20%, 35 V	3	196D475X0035JE3	56289	
C10	Same as C4				
C11	Capacitor, Ceramic, Mono: 470 pF, 5%, 100 V	1	8121-100C0G0-471J	72982	
C12	Capacitor, Electrolytic, Tantalum: 22 µF, 20%, 10 V	3	196D226X0010JE3	56289	
C13	Capacitor, Electrolytic, Tantalum: 1.0 µF, 20%, 35 V	1	196D105X0035HE3	56289	
C14	Capacitor, Mica, Dipped: 250 pF, 5%, 500 V	1	DM15-251J	72136	
C15	Same as C2				
C16 Thru C20	Same as C4				
C21	Same as C12				
C22	Same as C12				
C23	Capacitor, Electrolytic, Tantalum: 100 µF, 20%, 20 V	1	196D107X0020TE4	56289	
C24	Same as C9				
C25	Same as C9				
C26	Capacitor, Variable, Ceramic: 2.5-11 pF, 350 V	1	538-011B2.5-11	72982	
C27	Capacitor, Ceramic, Disc: 39 pF, 5%, 100 V	1	8121-100C0G0-390J	72982	
CR1	Diode	1	BB105B	25088	
CR2	Not Used				
CR3	Not Used				
CR4	Not Used				
CR5	Not Used				
CR6	Diode	3	1N995	80131	
CR7	Same as CR6				
CR8	Same as CR6				
DS1	Lamp, LED	4	5082-4684	28480	
DS2 Thru DS4	Same as DS1				
L1	Coil, Fixed: 2.2 µH	1	1025-28	99800	
L2	Coil, Fixed: 390 µH	1	2500-08	99800	
L3	Coil, Fixed	1	21210-186	14632	
L4	Coil, Fixed	2	20681-185	14632	

REF DESIG PREFIX A4A4

REF DESIG	DESCRIPTION	QTY. PER ASSY.	MANUFACTURER'S PART NO.	MFR. CODE	RECM. VENDOR
L5	Same as L4				
Q1	Transistor	4	2N3904	80131	
Q2	Same as Q1				
Q3	Transistor	1	2N2904	80131	
Q4	Same as Q1				
Q5	Same as Q1				
R1	Resistor, Fixed, Composition: 330 Ω, 5%, 1/4 W	4	RCR07G331JS	81349	
R2	Resistor, Fixed, Composition: 200 Ω, 5%, 1/4 W	1	RCR07G201JS	81349	
R3	Resistor, Fixed, Composition: 10 kΩ, 5%, 1/4 W	4	RCR07G103JS	81349	
R4	Resistor, Fixed, Composition: 2 kΩ, 5%, 1/4 W	2	RCR07G202JS	81349	
R5	Same as R3				
R6	Same as R3				
R7	Resistor, Fixed, Composition: 1 kΩ, 5%, 1/4 W	4	RCR07G102JS	81349	
R8	Resistor, Fixed, Composition: 470 Ω, 5%, 1/4 W	3	RCR07G471JS	81349	
R9	Same as R1				
R10	Resistor, Fixed, Composition: 220 Ω, 5%, 1/4 W	1	RCR07G271JS	81349	
R11	Same as R1				
R12	Resistor, Trimmer, Film: 20 kΩ, 10%, 1/2 W	1	62PR20K	73138	
R13	Resistor, Trimmer, Film: 50 kΩ, 10%, 1/2 W	1	62PR50K	73138	
R14	Same as R4				
R15	Same as R3				
R16	Same as R7				
R17	Same as R8				
R18	Same as R8				
R19	Same as R7				
R20	Resistor, Fixed, Composition: 100 Ω, 5%, 1/4 W	8	RCR07G101JS	81349	
R21 Thru R27	Same as R20				
R28	Same as R1				
R29	Same as R7				
U1	Integrated Circuit	2	11C44DC	07263	
U2	Integrated Circuit	1	MC1648L	04713	
U3	Integrated Circuit	2	MC10138L	04713	
U4	Same as U3				
U5	Integrated Circuit	1	SN74LS196N	01295	
U6	Same as U1				
U7	Integrated Circuit	1	MC12013P	04713	
U8	Integrated Circuit	1	MC12014L	04713	
U9	Integrated Circuit	4	SN54LS190J	01295	

REF DESIG PREFIX A4A4

REF DESIG	DESCRIPTION	QTY. PER ASSY.	MANUFACTURER'S PART NO.	MFR. CODE	RECM. VENDOR
U10 Thru U12	Same as U9				
U13	Integrated Circuit	1	MM74C374N	27014	
Y1	Crystal, Quartz: 10.7 MHz	1	CR64/U/10.7 MHz	81349	

3.5.4.4.1 Part 370282 3rd Synthesizer REF DESIG PREFIX A4A4A1

REF DESIG	DESCRIPTION	QTY. PER ASSY.	MANUFACTURER'S PART NO.	MFR. CODE	RECM. VENDOR
A1	3rd LO RF	1	370324	14632	
C1	Capacitor, Ceramic, Feedthru: 1000 pF, GMV, 500 V	6	54-794-009-102W	33095	
C2 Thru C6	Same as C1				
C7	Capacitor, Electrolytic, Tantalum: 22 µF, 20%, 10 V	1	196D226X0010JE3	56289	
C8	Capacitor, Ceramic, Mono: 15 pF, 5%, 100 V	1	8111-100C0G0-150J	72982	
CR1	Diode	1	1N462A	80131	
E1	Connector, Termination	2	144/188	19505	
E2	Same as E1				
FB1	Ferrite Bead	8	56-590-65/4A	02114	
FB2 Thru FB8	Same as FB1				
L1	Coil, Fixed: 33 µH	2	1537-52	99800	
L2	Same as L1				
L3	Not Used				
P1	Connector, Plug, SMC	1	50-311-3188	98291	
R1	Resistor, Fixed, Composition: 33 Ω, 5%, 1/4 W	1	RCR07G330JS	81349	
R2	Resistor, Fixed, Composition: 1 kΩ, 5%, 1/8 W	1	RCR05G102JS	81349	
R3	Resistor, Fixed, Composition: 1.2 kΩ, 5%, 1/4 W	1	RCR07G122JS	81349	
W1	Cable Assembly	1	17300-188-5	14632	

3.5.4.4.1.1 Part 370324 3rd Synthesizer RF REF DESIG PREFIX A4A4A1A1

REF DESIG	DESCRIPTION	QTY. PER ASSY.	MANUFACTURER'S PART NO.	MFR. CODE	RECM. VENDOR
C1	Capacitor, Ceramic, Disc: 1000 pF, GMV, 500 V	7	SM(1000 pF)P	91418	
C2	Same as C1				
C3	Capacitor, Variable, Air: 0.6 - 4.5 pF, 500 V	11	M5F	18736	
C4	Capacitor, Ceramic, Disc: 8.2 pF, ±0.5 pF, 100 V	1	8101-100C0H0-829D	72982	
C5	Same as C3				
C6	Capacitor, Ceramic, Chip: 4.7 pF, ±0.25 pF, 500 V	3	ATC700B4R7CP500	29990	
C7	Capacitor, Ceramic, Chip: 1000 pF, ±20%, 50 V	3	ATC700B102MP50	28733	
C8	Capacitor, Ceramic, Disc: 0.47 µF, 20%, 50 V	2	34452-1	14632	
C9	Capacitor, Ceramic, Disc: 2.7 pF, ±0.25 pF, 500 V	1	ATC700B2R7CP500	29990	
C10	Same as C3				
C11	Same as C3				
C12	Capacitor, Ceramic, Chip: 3 pF, ±0.25 pF, 500 V	1	ATC700B3R0CP500	29990	
C13	Same as C3				
C14	Same as C6				
C15	Capacitor, Ceramic, Disc: 0.1 µF, 20%, 50 V	5	34475-1	14632	
C16 Thru C19	Same as C15				
C20	Same as C1				
C21	Same as C1				
C22	Capacitor, Electrolytic, Tantalum: 47 µF, 20%, 20 V	1	196D476X0020PE4	56289	
C23	Capacitor, Ceramic, Chip: 9.1 pF, ±0.25 pF, 500 V	2	ATC700B9R1DP500	29990	
C24	Same as C23				
C25	Capacitor, Ceramic, Chip: 2.4 pF, ±0.25 pF, 500 V	1	ATC700B2R4CP500	29990	
C26	Capacitor, Mica, Dipped: 27 pF, 2%, 500 V	1	CM05ED270G03	81349	
C27	Same as C1				
C28	Same as C1				
C29	Same as C3				
C30	Capacitor, Ceramic, Disc: 5.6 pF, ±0.5 pF, 100 V	1	8101-100C0H0-569D	72982	
C31	Same as C3				
C32	Same as C6				
C33	Same as C7				
C34	Same as C8				
C35	Capacitor, Ceramic, Chip: 3.3 pF, ±0.25 pF, 500 V	1	ATC700B3R3CP500	29990	
C36	Same as C3				
C37	Same as C3				
C38	Capacitor, Ceramic, Chip: 3.9 pF, ±0.25 pF, 500 V	1	ATC700B3R9CP500	29990	
C42	Same as C41				
C43	Same as C7				
C44	Same as C41				
C45	Same as C41				

REF DESIG PREFIX A4A4A1A1

REF DESIG	DESCRIPTION	QTY. PER ASSY.	MANUFACTURER'S PART NO.	MFR. CODE	RECM. VENDOR
C46	Same as C3				
C47	Same as C41				
C48	Capacitor, Mica, Dipped: 15 pF, 5%, 500 V	1	CM05CD150J03	81349	
C49	Same as C1				
C50	Capacitor, Ceramic, Chip: 4.3 pF, ±0.5 pF, 500 V	1	ATC700B4R3DP500	29990	
CR1	Diode	2	MV1404	04713	
CR2	Same as CR1				
L1	Coil, Fixed: 1.8 µH	1	1025-26	99800	
L2	Coil, Fixed	1	1025-34	99800	
L3	Coil, Fixed	2	1129-46	14632	
L4	Coil, Fixed: 6.8 µH	2	1025-40	99800	
L5	Same as L3				
L6	Same as L4				
Q1	Transistor	1	2N5109	80131	
Q2	Transistor	5	BFR-96	73445	
Q3	Transistor	3	2N2222A	80131	
Q4	Same as Q3				
Q5	Same as Q3				
Q6	Not Used				
Q7	Same as Q2				
Q8	Same as Q2				
Q9	Same as Q2				
Q10	Same as Q2				
R1	Resistor, Fixed, Composition: 4.7 kΩ, 5%, 1/4 W	6	RCR07G472JS	81349	
R2	Resistor, Fixed, Composition: 1 kΩ, 5%, 1/4 W	9	RCR07G102JS	81349	
R3	Resistor, Fixed, Composition: 33 Ω, 5%, 1/8 W	2	RCR05G331JS	81349	
R4	Resistor, Fixed, Composition: 4.7 Ω, 5%, 1/4 W	2	RCR07G4R7JS	81349	
R5	Same as R1				
R6	Same as R2				
R7	Resistor, Fixed, Composition: 330 Ω, 5%, 1/4 W	1	RCR07G331JS	81349	
R8	Resistor, Fixed, Composition: 220 Ω, 5%, 1/4 W	2	RCR07G221JS	81349	
R9	Resistor, Fixed, Composition: 2 kΩ, 5%, 1/4 W	2	RCR07G202JS	81349	
R10	Same as R9				
R11	Resistor, Fixed, Composition: 5.1 kΩ, 5%, 1/4 W	1	RCR07G512JS	81349	
R12	Resistor, Fixed, Composition: 5.6 kΩ, 5%, 1/4 W	1	RCR07G562JS	81349	
R13	Resistor, Fixed, Composition: 270 Ω, 5%, 1/4 W	3	RCR07G271JS	81349	
R14	Resistor, Fixed, Composition: 10 kΩ, 5%, 1/4 W	1	RCR07G103JS	81349	
R15	Resistor, Fixed, Composition: 33 kΩ, 5%, 1/4 W	3	RCR07G333JS	81349	
R16	Same as R15				
R17	Same as R13				
R18	Not Used				

REF DESIG PREFIX A4A4A1A1

REF DESIG	DESCRIPTION	QTY. PER ASSY.	MANUFACTURER'S PART NO.	MFR. CODE	RECM. VENDOR
R19	Same as R2				
R20	Resistor, Fixed, Composition: 33 kΩ, 5%, 1/4 W	1	RCR07G332JS	81349	
R21	Resistor, Fixed, Composition: 27 Ω, 5%, 1/4 W	2	RCR07G270JS	81349	
R22	Same as R13				
R23	Same as R15				
R24	Not Used				
R25	Same as R1				
R26	Same as R2				
R27	Same as R2				
R28	Same as R4				
R29	Same as R1				
R30	Same as R2				
R31	Same as R5				
R32	Resistor, Fixed, Composition: 2.7 Ω, 5%, 1/4 W	3	RCR07G2R7JS	81349	
R33	Resistor, Fixed, Composition: 100 Ω, 5%, 1/4 W	2	RCR07G101JS	81349	
R34	Same as R1				
R35	Same as R2				
R36	Same as R32				
R37	Same as R33				
R38	Same as R21				
R39	Resistor, Fixed, Composition: 220 Ω, 5%, 1/8 W	1	RCR05G221JS	81349	
R40	Same as R1				
R41	Same as R2				
R42	Same as R32				
T1	Transformer	4	21092-19	14632	
T2 Thru T4	Same as T1				
U1	Mixer, Double Balanced	1	TFM-2	15542	
U2	Integrated Circuit	1	N5733K	18324	
Y1	Crystal, Quartz: 21.0 MHz	1	91805-3	14632	

3.5.4.5 Type BFO assembly REF DESIG PREFIX A4A5

REF DESIG	DESCRIPTION	QTY. PER ASSY.	MANUFACTURER'S PART NO.	MFR. CODE	RECM. VENDOR
C1	Capacitor, Electrolytic, Tantalum: 2.2 µF, 20%, 35 V	3	196D225X0035JE3	56289	
C2	Same as C1				
C3	Same as C1				
C4	Capacitor, Mica, Dipped: 1800 pF, 2%, 500 V	1	CM06FD182G03	81349	
C5	Capacitor, Mica, Dipped: 51 pF, 2%, 500 V	1	CM05ED510G03	81349	
C6	Capacitor, Variable, Ceramic: 9-35 pF, 350 V	1	538-011D9-35	72982	
C7	Capacitor, Mica, Dipped: 47 pF, 2%, 500 V	2	CM05ED470G03	81349	
C8	Capacitor, Ceramic, Disc: 4700 pF, 20%, 50 V	6	8121-050-651-472M	72982	
C9	Same as C8				
C10	Same as C8				
C11	Same as C7				
C12	Same as C8				
C13	Same as C8				
C14	Capacitor, Ceramic, Disc: 1000 pF, 5%, 100 V	1	8121-100C0G0-102J	72982	
C15	Same as C8				
CR1	Diode	2	5082-2800	28480	
CR2	Same as CR1				
FB1	Ferrite Bead	3	56-590-65-4A	02114	
FB2	Same as FB1				
FB3	Same as FB1				
L1	Coil, Fixed: 1.2 mH	2	2500-32	99800	
L2	Coil, Fixed: 330 µH	1	2500-04	99800	
L3	Same as L1				
L4	Coil, Fixed	2	22295-66	14632	
L5	Same as L4				
Q1	Transistor	2	2N2857	80131	
Q2	Same as Q1				
R1	Resistor, Fixed, Composition: 47 kΩ, 5%, 1/4 W	3	RCR07G473JS	81349	
R2	Same as R1				
R3	Resistor, Fixed, Composition: 100 kΩ, 5%, 1/4 W	2	RCR07G104JS	81349	
R4	Same as R1				
R5	Same as R3				
R6	Resistor, Fixed, Composition: 12 kΩ, 5%, 1/4 W	1	RCR07G123JS	81349	
R7	Resistor, Fixed, Composition: 10 kΩ, 5%, 1/4 W	2	RCR07G103JS	81349	
R8	Same as R7				
R9	Resistor, Variable, Film: 1 kΩ, 10%, 1/2 W	1	62PR1K	73138	
R10	Resistor, Fixed, Composition: 2.7 kΩ, 5%, 1/4 W	1	RCR07G272JS	81349	
R11	Resistor, Fixed, Composition: 1.0 Ω, 5%, 1/4 W	1	RCR07G102JS	81349	
R12	Resistor, Fixed, Composition: 4.7 kΩ, 5%, 1/4 W	1	RCR07G472JS	81349	
R13	Resistor, Fixed, Composition: 22 kΩ, 5%, 1/4 W	1	RCR07G223JS	81349	

REF DESIG PREFIX A4A5

REF DESIG	DESCRIPTION	QTY. PER ASSY.	MANUFACTURER'S PART NO.	MFR. CODE	RECM. VENDOR
R14	Resistor, Fixed, Composition: 100 kΩ, 5%, 1/4 W	1	RCR07G101JS	81349	
R15	Resistor, Fixed, Composition: 470 Ω, 5%, 1/4 W	1	RCR07G471JS	81349	
R16	Resistor, Fixed, Composition: 47 Ω, 5%, 1/4 W	1	RCR07G470JS	81349	

3.5.5 TYPE 794083-1 DIGITAL MOTHER BOARD REF DESIG PREFIX A5

REF DESIG	DESCRIPTION	QTY. PER ASSY.	MANUFACTURER'S PART NO.	MFR. CODE	RECM. VENDOR
A1	Receiver Interface	1	794108	14632	
A2	Synthesizer Interface	1	794110	14632	
A3	Microprocessor	1	794109	14632	
A4 Thru A6	Optional				
A7	Synthesizer Intersizer	1	794110	14632	
C1	Capacitor, Ceramic, Disc: 0.01 µF, ±20%, 50 V	62	34453-1	14632	
C2 Thru C62	Same as C1				
J1	Combination, Post, Feed-thru: 6 positions	3	270618-2	14632	
J2	Combination, Post, Feed-thru: 29 positions	3	270618-1	14632	
J3	Same as J2				
J4	Same as J2				
J5	Same as J1				
J6	Same as J1				
R1	Resistor, Fixed, Composition: 10 kΩ, 5%, 1/8 W	1	RCR05G103JS	81349	
XA1	Housing	10	117798-3	00779	
XA2 Thru XA10	Same as XA1				

3.5.5.1 Type 794108 Receiver Interface REF DESIG PREFIX A5A1

REF DESIG	DESCRIPTION	QTY. PER ASSY.	MANUFACTURER'S PART NO.	MFR. CODE	RECM. VENDOR
C1	Capacitor, Ceramic, Disc: 0.047 µF, 10%, 100 V	1	CK06BX473K	81349	
C2	Capacitor, Ceramic, Disc: 0.1 µF, ±20%, 50 V	15	34475-1	14632	
C3 Thru C16	Same as C2				
C17	Capacitor, Ceramic, Disc: 0.01 µF, 20%, 50 V	2	34453-1	14632	
C18	Same as C17				
C19	Capacitor, Electrolytic, Tantalum: 4.7 µF, 20%, 35 V	1	196D475X0035JE3	56289	
C20	Capacitor, Ceramic, Disc: 0.022 µF, 10%, 100 V	2	CK06BX223K	81349	
C21	Same as C20				
CR1	Diode	2	5082-2800	28480	
CR2	Same as CR1				
Q1	Transistor	1	2N4918	80131	
R1	Resistor, Variable, Film: 100 kΩ, 10%, 1/2 W	1	62PAR100K	73138	
R2	Resistor, Fixed, Composition: 10 kΩ, 5%, 1/4 W	1	RCR07G103JS	81349	
R3	Resistor, Fixed, Composition: 470 Ω, 5%, 1/4 W	1	RCR07G471JS	81349	
R4	Resistor, Fixed, Composition: 47 Ω, 5%, 1/4 W	1	RCR07G470JS	81349	
R5	Resistor, Fixed, Composition: 47 kΩ, 5%, 1/4 W	3	RCR07G473JS	81349	
R6	Resistor, Fixed, Composition: 43 kΩ, 5%, 1/4 W	3	RCR07G433JS	81349	
R7	Same as R6				
R8	Not Used				
R9	Resistor, Fixed, Composition: 68 Ω, 5%, 1/4 W	2	RCR07G680JS	81349	
R10	Same as R9				
R11	Resistor, Fixed, Composition: 680 Ω, 5%, 1/4 W	1	RCR07G681JS	81349	
R12	Resistor, Fixed, Film: 4.32 kΩ, 1%, 1/10 W	1	RN55C4321F	81349	
R13	Same as R6				
R14	Resistor, Fixed, Composition: 100 kΩ, 5%, 1/4 W	5	RCR07G104JS	81349	
R15	Resistor, Fixed, Composition: 4.7 kΩ, 5%, 1/4 W	2	RCR07G472JS	81349	
R16	Same as R15				
R17	Resistor, Network: 100 Ω	2	4310R-102-101	80294	
R18	Same as R17				
R19	Same as R14				
R20	Resistor, Fixed, Film: 10 kΩ, 1%, 1/10 W	4	RN55C1002F	81349	
R21	Resistor, Fixed, Film: 56.2 kΩ, 1%, 1/4 W	2	RN55C5622F	81349	
R22 Thru R24	Same as R20				
R25	Not Used				
R26	Same as R20				
R27	Same as R14				
R28	Resistor, Fixed, Film: 121 kΩ, 1%, 1/4 W	1	MF4C/121K/F	80031	
R29	Resistor, Network: 47 kΩ	1	4308R101-473	80294	

REF DESIG PREFIX A5A1

REF DESIG	DESCRIPTION	QTY. PER ASSY.	MANUFACTURER'S PART NO.	MFR. CODE	RECM. VENDOR
R30	Same as R5				
R31	Same as R5				
U1	Integrated Circuit	1	SN74LS122N	01295	
U2	Integrated Circuit	2	SN74LS04N	01295	
U3	Integrated Circuit	2	MM74C74N	27014	
U4	Integrated Circuit	2	MM74C174N	27014	
U5	Integrated Circuit	1	MC14506BCP	04713	
U6	Same as U3				
U7	Integrated Circuit	3	SN74LS138N	01295	
U8	Same as U7				
U9	Same as U7				
U10	Integrated Circuit	1	SN74145N	01295	
U11	Integrated Circuit	3	MM74C374N	27014	
U12	Same as U11				
U13	Same as U11				
U14	Integrated Circuit	2	MM80C97N	27014	
U15	Integrated Circuit	1	ADC0809CCN	27014	
U16	Same as U2				
U17	Same as U4				
U18	Same as U14				

3.5.5.2 Type 794110-1 Synthesizer Interface REF DESIG PREFIX A5A2

REF DESIG	DESCRIPTION	QTY. PER ASSY.	MANUFACTURER'S PART NO.	MFR. CODE	RECM. VENDOR
C1	Capacitor, Ceramic, Disc: 0.1 µF, 20%, 50 V	9	34475-1	14632	
C2	Same as C1				
C3	Capacitor, Ceramic, Disc: 15 pF, 5%, 500 V	2	CM05CD150J03	81349	
C4	Same as C1				
C5	Same as C3				
C6	Capacitor, Ceramic, Disc: 0.01 µF, 20%, 50 V	2	34453-1	14632	
C7	Same as C6				
C8 Thru C13	Same as C1				
CR1	Diode	1	1N4446	80131	
E1	Terminal	13	461-2654-01-08	71279	
E2 Thru E13	Same as E1				
Q1	Transistor	1	2N2907/JAN	81350	
R1	Resistor, Fixed, Composition: 1 kΩ, 5%, 1/4 W	4	RCR07G102JS	81349	
R2	Resistor, Fixed, Composition: 470 Ω, 5%, 1/4 W	2	RCR07G471JS	81349	
R3	Resistor, Fixed, Composition: 1.5 kΩ, 5%, 1/4 W	2	RCR07G152JS	81349	
R4	Same as R1				
R5	Same as R2				
R6	Same as R1				
R7	Same as R1				
R8	Same as R3				
R9	Resistor, Network: 47 kΩ	1	4308R-101-473	80294	
R10	Not Used				
R11	Not Used				
R12	Resistor, Fixed, Composition: 100 Ω, 5%, 1/4 W	2	RCR07G101JS	81349	
R13	Same as R12				
R14	REsistor, Fixed, Composition: 47 kΩ, 5%, 1/4 W	3	RCR07G473JS	81349	
R15	Resistor, Fixed, Composition: 22 kΩ, 5%, 1/4 W	1	RCR07G223JS	81349	
R16	Resistor, Fixed, Composition: 33 kΩ, 5%, 1/4 W	1	RCR07G333JS	81349	
R17	Same as R9				
R18	Same as R14				
R19	Same as R14				
S1	Switch, Dip, SPST, 6 Rockers	1	76SB06	81073	
S2	Switch, Toggle: SPST	1	76SB08	81073	
U1	Integrated Circuit	2	MM74C74N	27014	
U2	Same as U1				
U3	Integrated Circuit	1	MM74C10N	27014	
U4	Integrated Circuit	3	MM80C97N	27014	
U5	Integrated Circuit	10	MM74C374N	27014	

REF DESIG PREFIX A5A2

REF DESIG	DESCRIPTION	QTY. PER ASSY.	MANUFACTURER'S PART NO.	MFR. CODE	RECM. VENDOR
U6 Thru U11	Same as U5				
U12	Programmable Integrated Circuit	1	170149	14632	
U13	Integrated Circuit	2	SN74LS04N	01295	
U14	Same as U13				
U15	Same as U5				
U16	Same as U4				
U17	Same as U5				
U18	Integrated Circuit	1	MC1458N	18324	
U19	Integrated Circuit	2	MC1408L6	04713	
U20	Same as U19				
U21	Same as U5				
U22	Same as U5				
U23	Integrated Circuit	1	MM74C14	27014	

3.5.5.3 Type 794109-1 Microprocessor REF DESIG PREFIX A5A3

REF DESIG	DESCRIPTION	QTY. PER ASSY.	MANUFACTURER'S PART NO.	MFR. CODE	RECM. VENDOR
C1	Capacitor, Ceramic, Disc: 0-01 µF, ±20%, 50 V	2	34453-1	14632	
C2	Same as C1				
C3	Capacitor, Ceramic, Disc: 0.1 µF, ±20%, 50 V	8	34475-1	14632	
C4 Thru C8	Same as C3				
C9	Capacitor, Ceramic, Disc: 0.47 µF, ±20%, 50 V	1	34452-1	14632	
C10	Capacitor, Mica, Dipped: 100 pF, ±2%, 500 V	1	CM05FD101G03	81349	
C11	Not Used				
C12	Not Used				
C13	Same as C3				
C14	Not Used				
C15	Same as C3				
C16	Capacitor, Ceramic, Disc: 1000 pF, GMV, 500 V	1	SM(1000 pF)P	91418	
C17	Capacitor, Electrolytic, Tantalum: 1 µF, 20%, 35 V	1	196D105X0035HE3	56289	
CR1	Diode	1	1N4003	80131	
L1	Coil, Fixed	1	1537-36	99800	
Q1	Transistor	1	SD300	18324	
Q2	Transistor	1	2N2222A	80131	
Q3	Not Used				
Q4	Transistor	1	2N2907/JAN	81350	
R1	Resistor, Fixed, Composition: 220 Ω, 5%, 1/4 W	2	RCR07G221JS	81349	
R2	Resistor, Fixed, Composition: 47 kΩ, 5%, 1/4 W	1	RCR07G473JS	81349	
R3	Resistor, Fixed, Composition: 100 Ω, 5%, 1/4 W	1	RCR20G101JS	81349	
R4	Same as R1				
R5	Not Used				
R6	Not Used				
R7	Not Used				
R8	Resistor, Fixed, Composition: 1 MΩ, 5%, 1/4 W	4	RCR07G105JS	81349	
R9	Same as R8				
R10	Resistor, Fixed, Composition: 100 kΩ, 5%, 1/4 W	3	RCR07G104JS	81349	
R11	Same as R10				
R12	Same as R8				
R13	Resistor, Fixed, Composition: 750 kΩ, 5%, 1/4 W	1	RCR07G754JS	81349	
R14	Resistor, Fixed, Composition: 2.7 kΩ, 5%, 1/4 W	1	RCR07G272JS	81349	
R15	Resistor, Fixed, Composition: 390 kΩ, 5%, 1/4 W	1	RCR07G394JS	81349	
R16	Resistor, Fixed, Composition: 1.0 kΩ, 5%, 1/4 W	2	RCR07G102JS	81349	
R17	Resistor, Fixed, Composition: 6.8 MΩ, 5%, 1/4 W	1	RCR07G685JS	81349	
R18	Resistor, Fixed, Composition: 2.2 MΩ, 5%, 1/4 W	1	RCR07G225JS	81349	
R19	Same as R16				
R20	Same as R8				
R21	Resistor, Fixed, Composition: 470 Ω, 5%, 1/4 W	1	RCR07G471JS	81349	

REF DESIG PREFIX A5A3

REF DESIG	DESCRIPTION	QTY. PER ASSY.	MANUFACTURER'S PART NO.	MFR. CODE	RECM. VENDOR
R22	Same as R10				
R23	Resistor, Trim, Film: 5 kΩ, 10%, 1/2 W	1	62PR5K	73138	
R24	Resistor, Fixed, Composition: 10 kΩ, 5%, 1/4 W	1	RCR07G103JS	81349	
U1	Integrated Circuit	1	MC6875P	04713	
U2	Integrated Circuit	1	MC68B00P	04713	
U3	Integrated Circuit	4	B2716	34649	
U4 Thru U6	Same as U3				
U7	Integrated Circuit	8	1M6561-1DN	32293	
U8 Thru U13	Same as U7				
U14	Not Used				
U15	Integrated Circuit	1	MM74C00N	27014	
U16	Integrated Circuit	1	SN74LS04N	01295	
U17	Integrated Circuit	1	SN74LS139N	01295	
U18	Integrated Circuit	2	SN74LS138N	01295	
U19	Integrated Circuit	1	MM74C374N	27014	
U20	Integrated Circuit	1	CD4040BE	02735	
U21	Same as U18				
U22	Same as U7				
U23	Integrated Circuit	1	ICL7611DCPA	32293	
VR1	Voltage Regulator: 5.6 V	1	1N752A	80131	
Y1	Crystal, Quartz: 4.000 MHz, ±0.001%	1	91805-29	14632	

3.5.6 TYPE 794093-1 FRONT PANEL DISPLAY + CONTROL REF DESIG PREFIX A6

REF DESIG	DESCRIPTION	QTY. PER ASSY.	MANUFACTURER'S PART NO.	MFR. CODE	RECM. VENDOR
C1	Capacitor, Ceramic, Disc: 0.1 µF, ±20%, 50 V	2	34475-1	14632	
C2	Capacitor, Electrolytic, Tantalum: 1.0 µF, ±10%, 35 V	2	CS13BF105K	81349	
C3	Same as C1				
C4	Same as C2				
DS1	LED Display, .43 RED	8	5082-7651	28480	
DS2 Thru DS8	Same as DS1				
DS9	LED Display, .3 RED	8	5082-7611	28480	
DS10	Same as DS9				
DS11	LED Display, .3 RED	2	5082-7616	28480	
DS12 Thru DS15	Same as DS11				
DS16	Same as DS11				
DS17	Same as DS9				
DS18	Same as DS9				
DS19	LED, RED Part of DS20	31	5082-4684	28480	
DS20	LED, Modified	30	170155-1	14632	
DS21 Thru DS49	Same as DS20				
J1	Connector, Receptacle, Multipin	1	86418-9	00779	
J2	Header Assembly	1	170156-1	14632	
J3	Header Assembly	1	170156-3	14632	
J4	Header Assembly	1	170156-2	14632	
J5	Header Assembly	2	2-87220-9	00779	
J6	Same as J5				
Q1	Transistor	9	2N4918	80131	
Q2 Thru Q9	Same as Q1				
Q10	Transistor	1	2N4921	80131	
R1	Resistor, Variable, Composition: 10 kΩ, 10%, 1 W Linear	1	70A3N056L103U	01121	
R2	Resistor, Fixed, Composition: 100 Ω, 5%, 1/2 W	14	RCR20G101JS	81349	
R3 Thru R15	Same as R2				
R16	Resistor, Fixed, Composition: 620 Ω, 5%, 1/4 W	1	RCR07G621JS	81349	
R17	Resistor, Fixed, Composition: 1 kΩ, 5%, 1/4 W	1	RCR07G102JS	81349	
R18	Resistor, Fixed, Composition: 47 kΩ, 5%, 1/4 W	2	RCR07G473JS	81349	
R19	Resistor, Fixed, Film: 200 Ω, 1%, 1/4 W	1	RN60D2000F	81349	
R20	Resistor, Fixed, Composition: 270 Ω, 5%, 1/4 W	1	RCR07G271JS	81349	

REF DESIG PREFIX A6

REF DESIG	DESCRIPTION	QTY. PER ASSY.	MANUFACTURER'S PART NO.	MFR. CODE	RECM. VENDOR
R21	Same as R18				
R22	Resistor, Fixed, Composition: 10 kΩ, 5%, 1/4 W	1	RCR07G103JS	81349	
S1	Switch, Pushbutton, SPDT with LED	30	SRUL	31918	
S2 Thru S29	Same as S1				
S30	Switch, Pushbutton	3	SRU	31918	
S31	Same as S1				
S32	Same as S30				
S33	Same as S30				
U1	Integrated Circuit	2	ULN2003A	56289	
U2	Same as U1				
U3	Integrated Circuit	1	MC1458N	18324	
U4	Integrated Circuit	4	DM8834N	02735	
U5	Same as U4				
U6	Integrated Circuit	2	MM74C923N	27014	
U7	Same as U4				
U8	Same as U4				
U9	Same as U6				

3.5.7 TYPE 791275 PHONE JACK ASSEMBLY REF DESIG PREFIX A7

REF DESIG	DESCRIPTION	QTY. PER ASSY.	MANUFACTURER'S PART NO.	MFR. CODE	RECM. VENDOR
C1	Capacitor, Ceramic, Feedthru: 1000 pF, GMV, 500 V	2	54-794-009-102W	33095	
C2	Same as C1				
J1	Connector, Phone Jack	1	CN12A	82389	

3.5.8 TYPE 794165-1 ANTENNA INPUT FILTER ASSEMBLY REF DESIG PREFIX A8

REF DESIG	DESCRIPTION	QTY. PER ASSY.	MANUFACTURER'S PART NO.	MFR. CODE	RECM. VENDOR
A1	HP/LP Filter Assembly	1	270617-1	14632	
J1	Connector, Receptacle, N-Type	2	UG58A/U	80058	
J2	Same as J1				
J3	Connector, Receptacle, Right Angle SMC	2	112	19505	
J4	Same as J3				

3.5.8.1 Part 270617-1 HP/LP Filter REF DESIG PREFIX A8A1

REF DESIG	DESCRIPTION	QTY. PER ASSY.	MANUFACTURER'S PART NO.	MFR. CODE	RECM. VENDOR
C1	Capacitor, Ceramic Chip: 4.3 pF, ±.5 pF, 500 V	2	ATC700B4BR3DP 500X	29990	
C2	Capacitor, Ceramic Chip: 9.1 pF, ±.5 pF, 500 V	1	ATC700B9R1DP500X	29990	
C3	Same as C1				
C4	Capacitor, Ceramic Chip: 13 pF, ±2%, 500 V	1	ATC700B130GP500X	29990	
C5	Capacitor, Ceramic Chip: 4.7 pF, ±.25 pF, 500 V	1	ATC700B4R7CP500X	29990	
C6	Capacitor, Ceramic Chip: 8.2 pF, ±.25 pF, 500 V	1	ATC700B8R2CP500X	29990	
C7	Capacitor, Ceramic Chip: 10 pF, ±2%, 500 V	1	ATC700B100GP500X	29990	
C8	Capacitor, Ceramic Chip: 33 pF, ±2%, 500 V	1	ATC700B330GP500X	29990	
L1	Coil, Fixed: 19.8 nH	2	170160-1	14632	
L2	Same as L1				
L3	Coil, Fixed: 22.3 nH	1	170158-1	14632	
L4	Coil, Fixed: 14.7 nH	1	170159-1	14632	

SCHEMATIC NOTE

Section IV contains the basic schematic diagrams, the actual circuit may vary due to improvements in design.

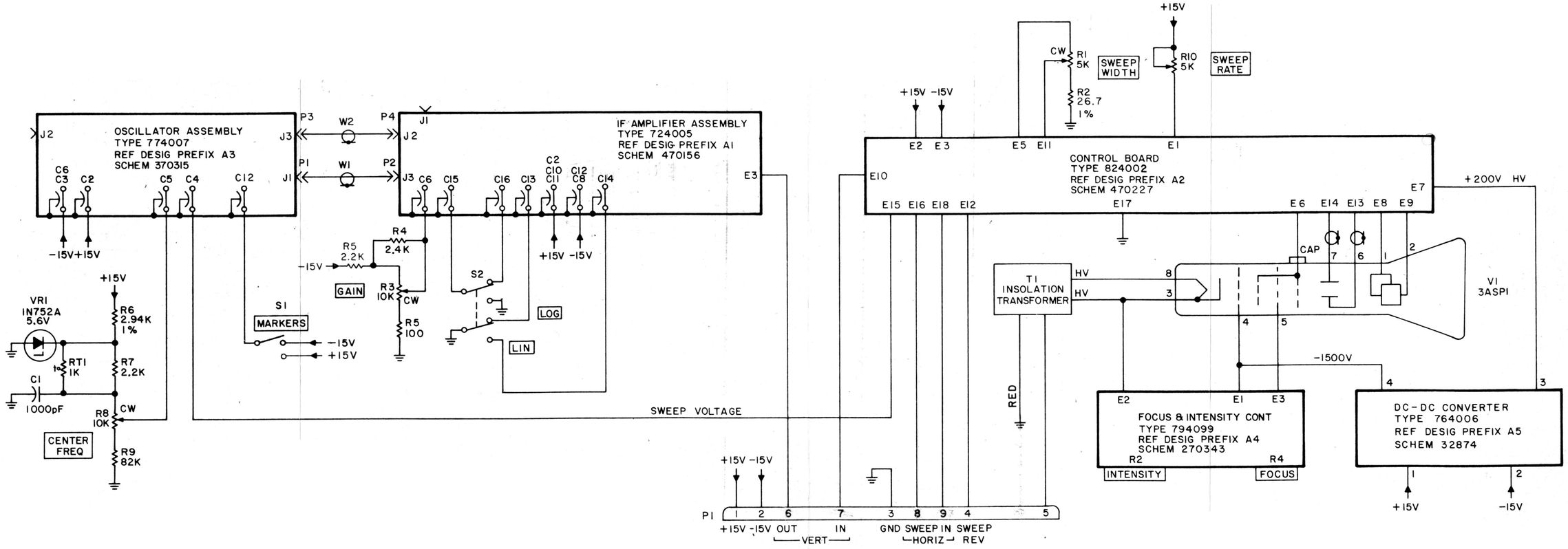

Figure 4-1. Type 794103 Signal Monitor (A2) Schematic Diagram 470212.

NOTE:
UNLESS OTHERWISE SPECIFIED:
a) RESISTANCE IS IN OHMS, ±5%, 1/4W.
b) CAPACITANCE IS IN pF.

HIGHEST REF DESIG		REF DESIG NOT USED
A3	J3	
C19	L3	
E3		
FB4	R8	

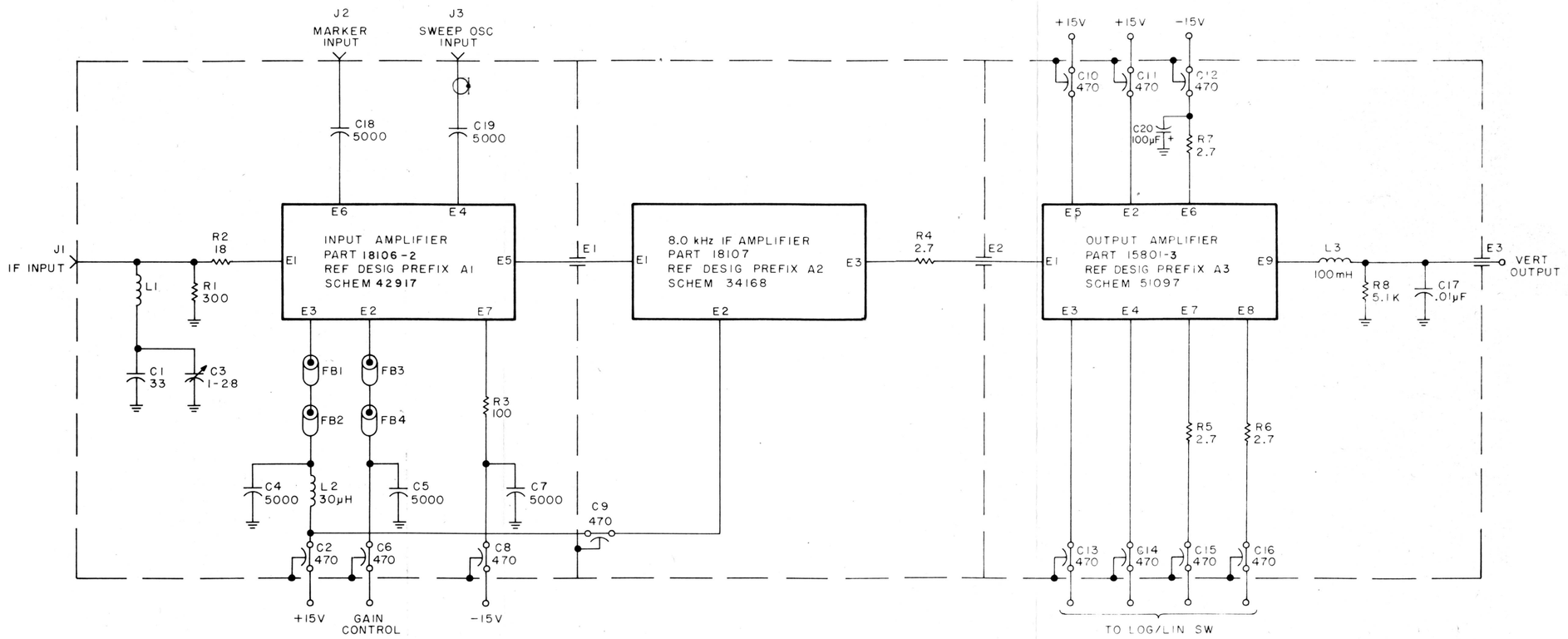

Figure 4-2. Type 724005 IF Amplifier Assembly (A2A1) Schematic Diagram 470156.

NOTES:
1. UNLESS OTHERWISE SPECIFIED
   a) RESISTANCE IS IN OHMS, ± 5%, 1/4W
   b) CAPACITANCE IS pF

HIGHEST REF DESIG USED	REF DESIG NOT USED
C21	
R24	R9
L5	
CR3	
U1	
Q4	
T1	

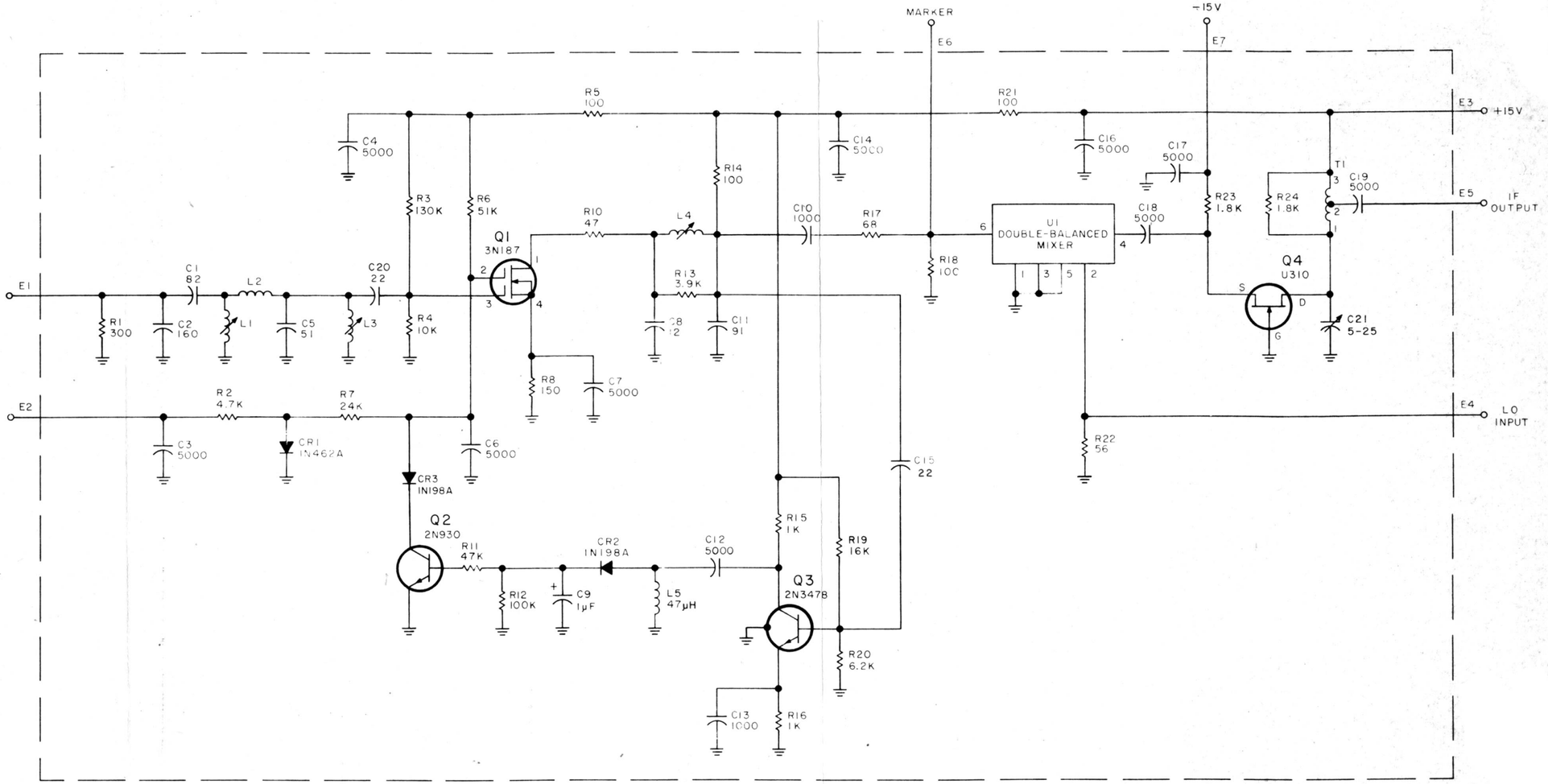

Figure 4-3 . Part 18106-2 Input Amplifier (A2A1A1) Schematic Diagram 42917.

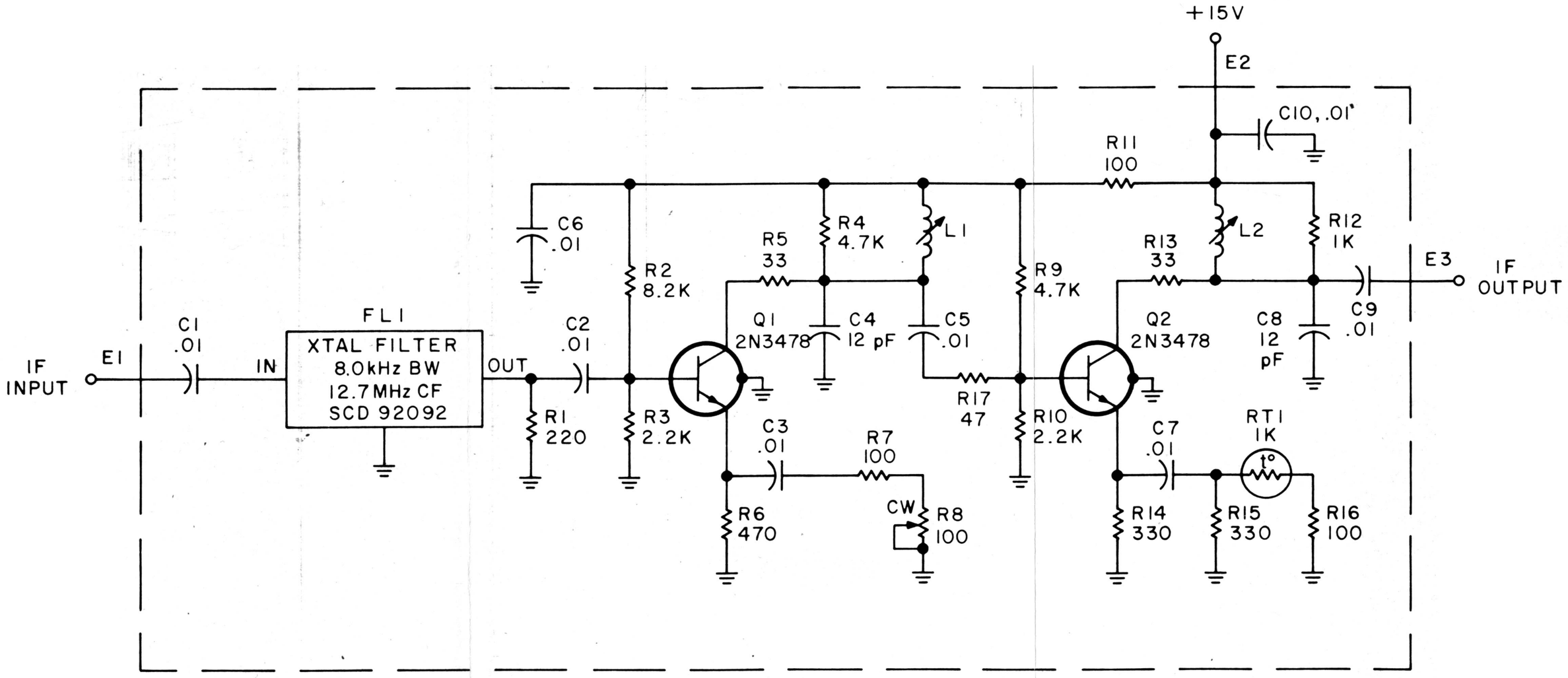

NOTE:

UNLESS OTHERWISE SPECIFIED:
RESISTANCE IS IN OHMS, ±5%, 1/4 W;
CAPACITANCE IS IN µF.

Figure 4-4 Part 18107-1 8.0 KHz IF Amplifier (A2A1A2)
Schematic Diagram 34168

NOTES:
1. UNLESS OTHERWISE SPECIFIED:
   a) RESISTANCE IS MEASURED IN OHMS, ±5%, 1/4W.
   b) CAPACITANCE IS pF.
2. CW ON POTENTIOMETERS INDICATES FULL CLOCKWISE POSITION OF ACTUATOR.
3. LEAD ARRANGEMENT FOR U2 & U3 IS SHOWN IN DETAIL A.
4. LEAD ARRANGEMENT FOR U1 IS SHOWN IN DETAIL B.
5. DIFFERENCE BETWEEN -2 AND -3 IS LISTED IN TABLE.

DETAIL A



DETAIL B



HIGHEST REF DESIG	REF DESIG NOT USED
C28 CR9 E9 L2 Q2 R48 U3	R1

PART NO	C1	C16	C19	C26
15801-2	27µF	27µF	27µF	27µF
15801-3	22µF	22µF	22µF	22µF

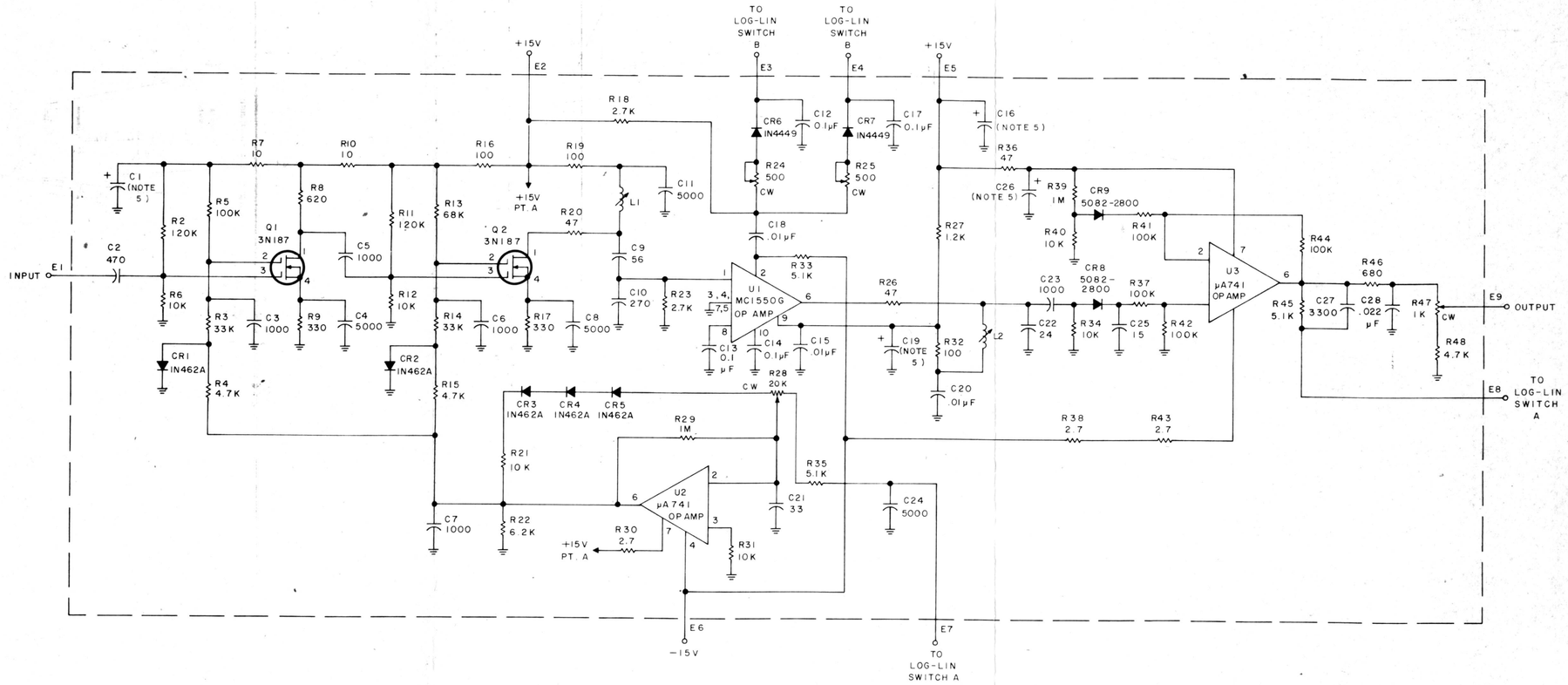

Figure 4-5 **Part 15801-3 Output Amplifier (A2A1A3)**
Schematic Diagram 51097

NOTES:
1. UNLESS OTHERWISE SPECIFIED, RESISTANCE IS IN OHMS, ±5%, 1/4 W.
2. U1, U2 LEAD ARRANGEMENT IS SHOWN IN DETAIL A.
3. CW AT POTENTIOMETERS INDICATES FULL CLOCKWISE POSITION OF ACTUATOR.
4. NOMINAL VALUE, FINAL VALUE FACTORY SELECTED.

DETAIL A



HIGHEST REF DESIG	REF DESIG NOT USED
C7 CR4 E18 Q10 R53 U2	

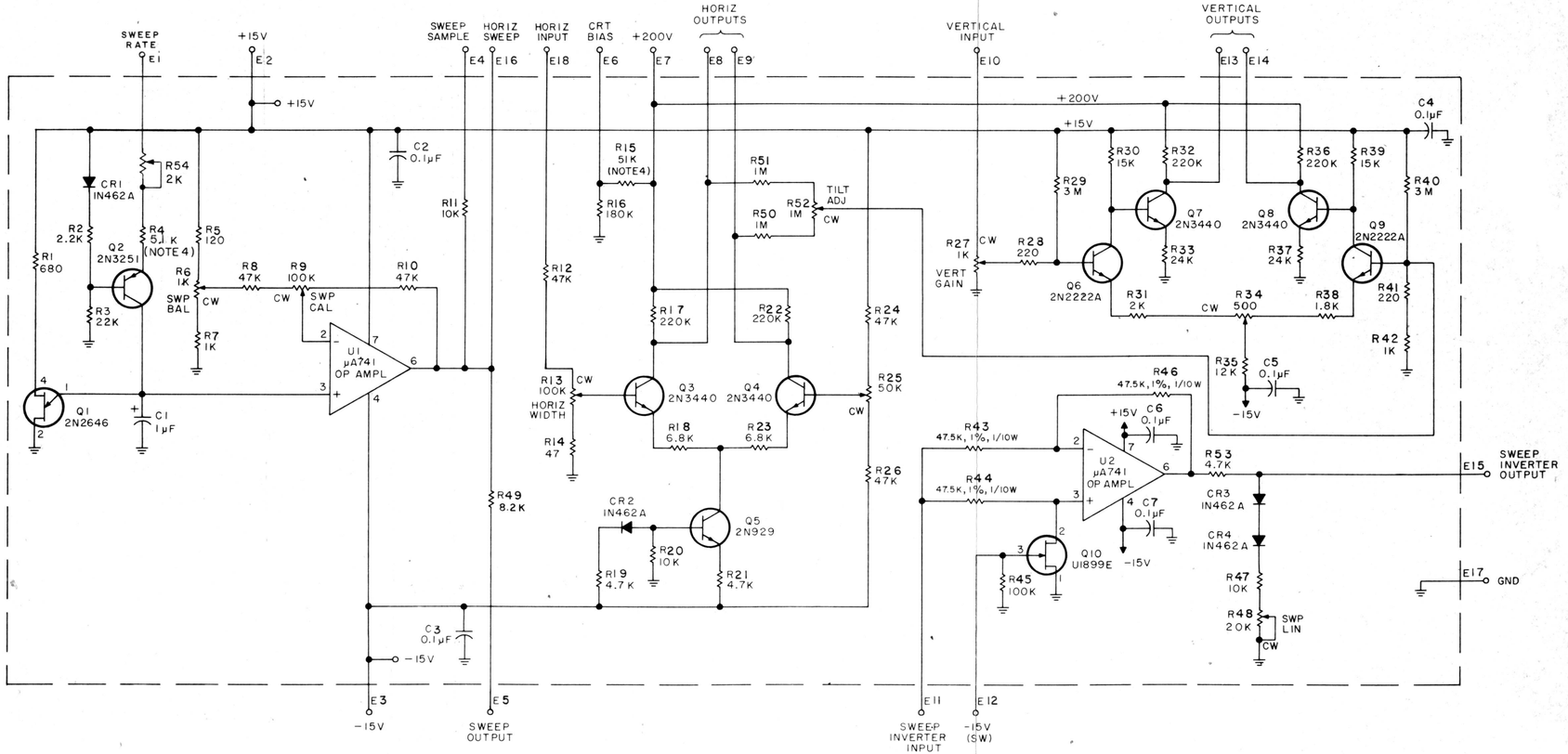

Figure 4-6. Type 824002 Control (A2A2) Schematic Diagram 470227.

NOTE:
UNLESS OTHERWISE SPECIFIED:

a) CAPACITANCE IS IN pF.
b) INDUCTANCE IS IN μH.
c) RESISTANCE IS IN OHMS ±5%, 1/4W.

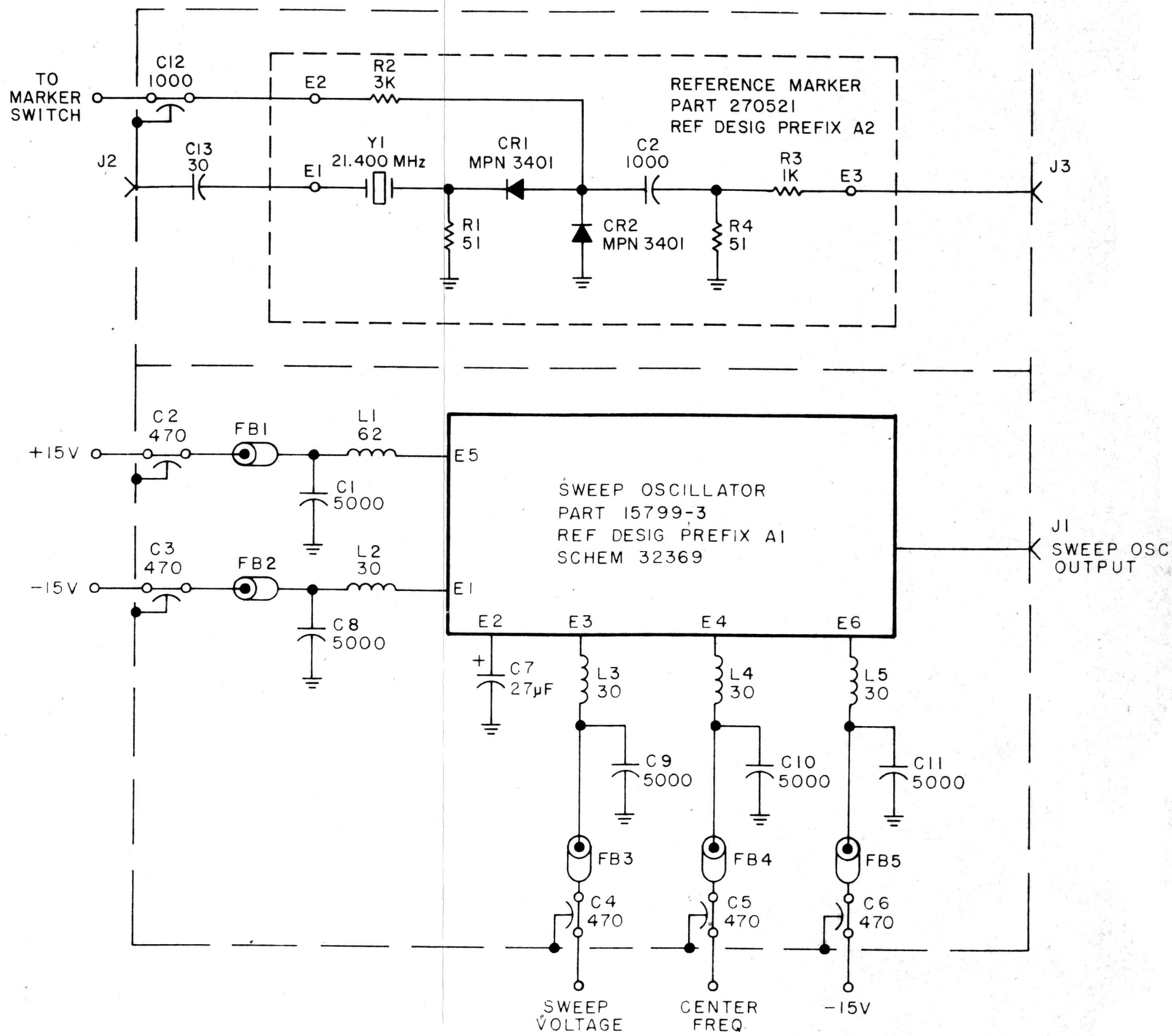

Figure 4-7. Type 774007 Oscillator Ass'y (A2A3), Schematic Diagram 370315

NOTES:

1. UNLESS OTHERWISE SPECIFIED:
   a) RESISTANCE IS MEASURED IN OHMS, ±1%, 1/4W.
   b) CAPACITANCE IS MEASURED IN pF.
2. DIFFERENCE BETWEEN DASH NUMBERS IS GIVEN BELOW:

	R2	R4	R7	R12	R16
15799-1	5.11K	56.2K	10K	18.2K	4.12K
15799-2	4.22K	47.5K	8.45K	15 K	3.57K

HIGHEST REF DESIG	REF DESIG NOT USED
C19 CR1 E6 L3 Q3 R15 T1	

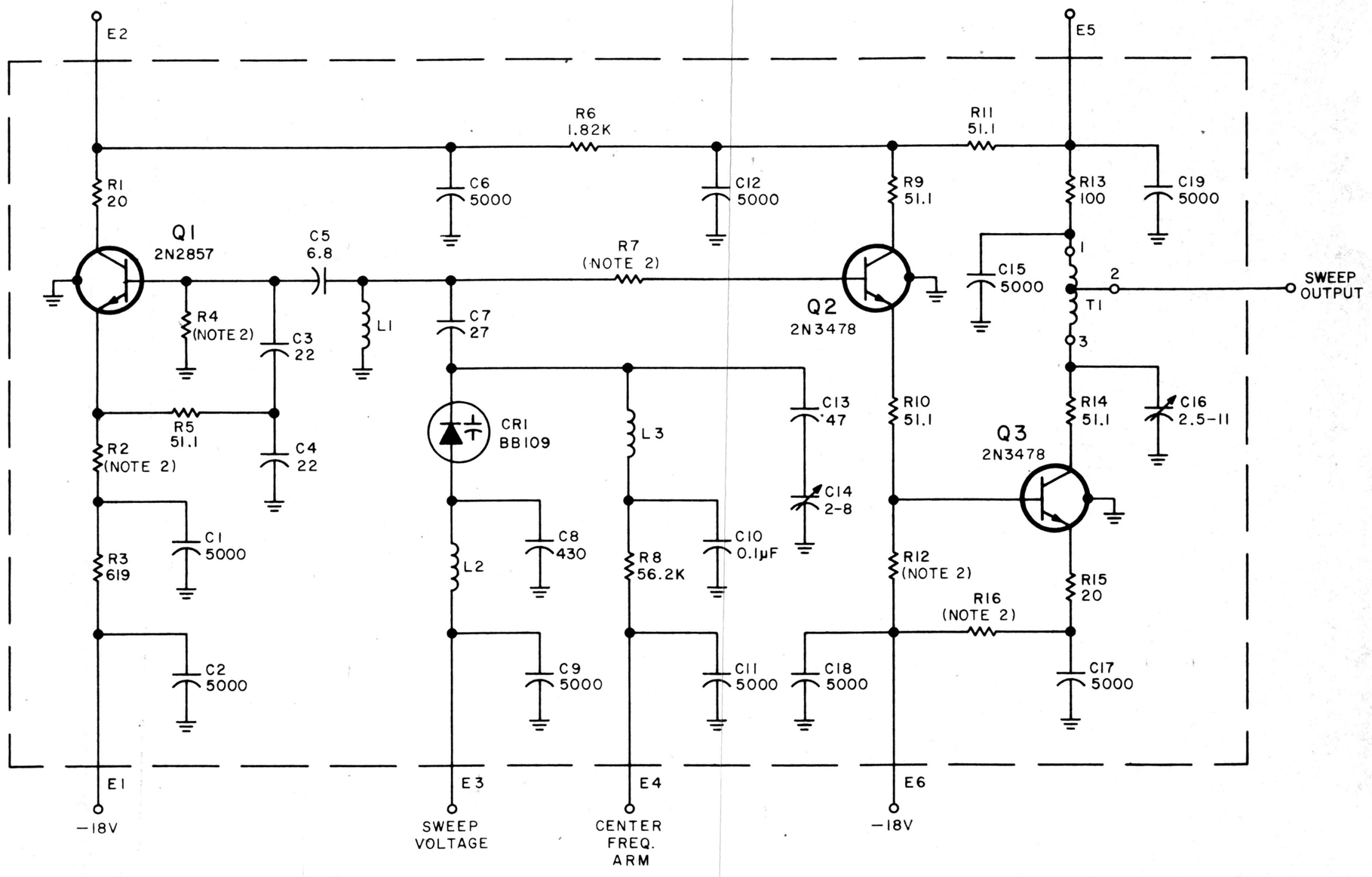

Figure 4-8 Part 15799-3 Sweep Oscillator (A2A3A1) Schematic Diagram 32369

NOTES:

1. UNLESS OTHERWISE SPECIFIED, RESISTANCE IS IN OHMS, ± 5%, 1/4W.
2. CW AT POTENTIOMETERS INDICATES FULL CLOCKWISE POSITION OF ACTUATOR.
3. ▭ INDICATES FRONT PANEL CONTROL.

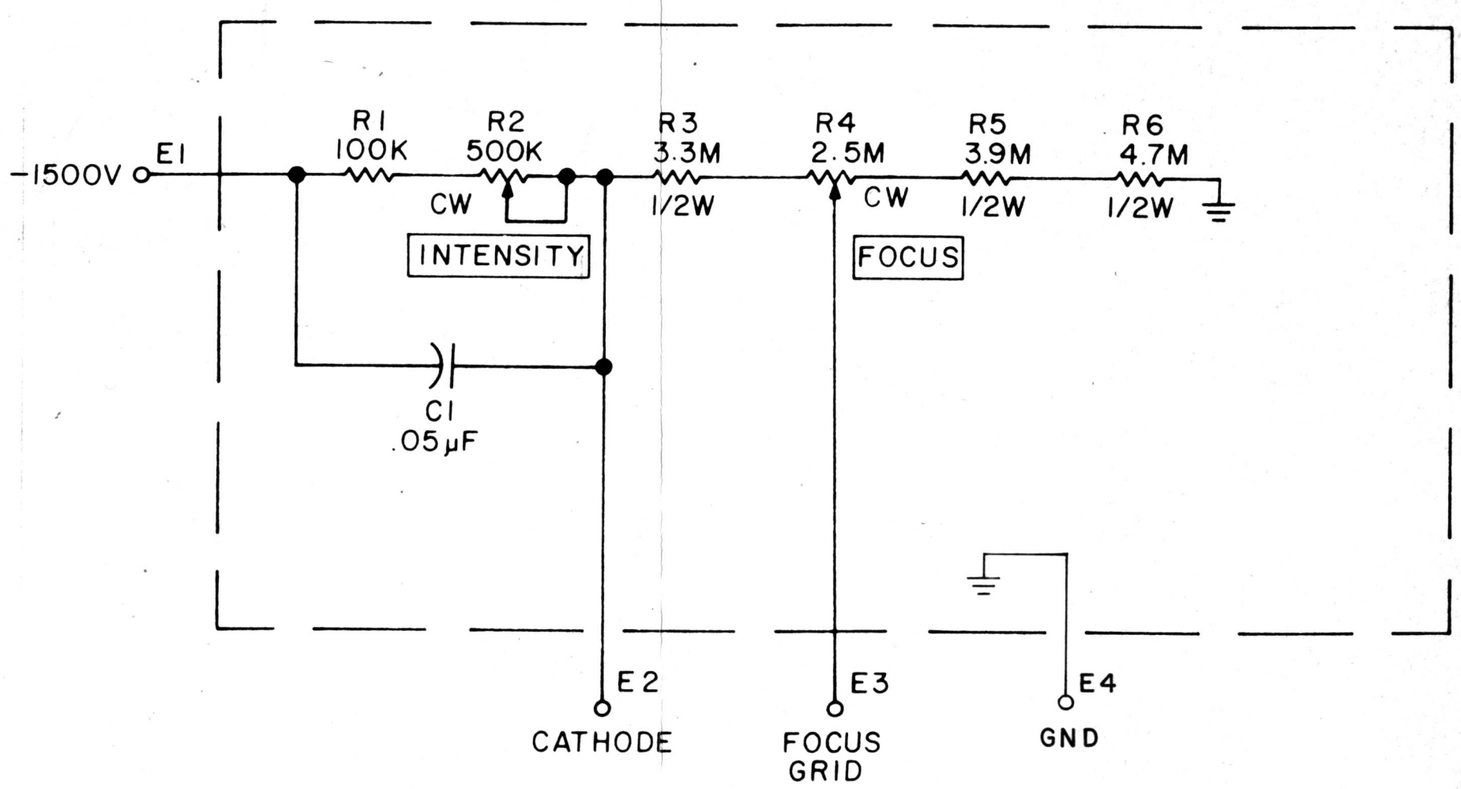

Figure 4-9. Type 794099 Focus & Intensity Control (A2A4) Schematic Diagram 270343.

NOTES:

1. UNLESS OTHERWISE SPECIFIED:
   (a) RESISTANCE IS IN OHMS, 1/4W, 5%.
   (b) CAPACITANCE IS IN µF.
2. ENCIRCLED NUMBERS ARE MODULE PIN NUMBERS.
3. DIFFERENE BETWEEN TYPES IS MECHANICAL ONLY.

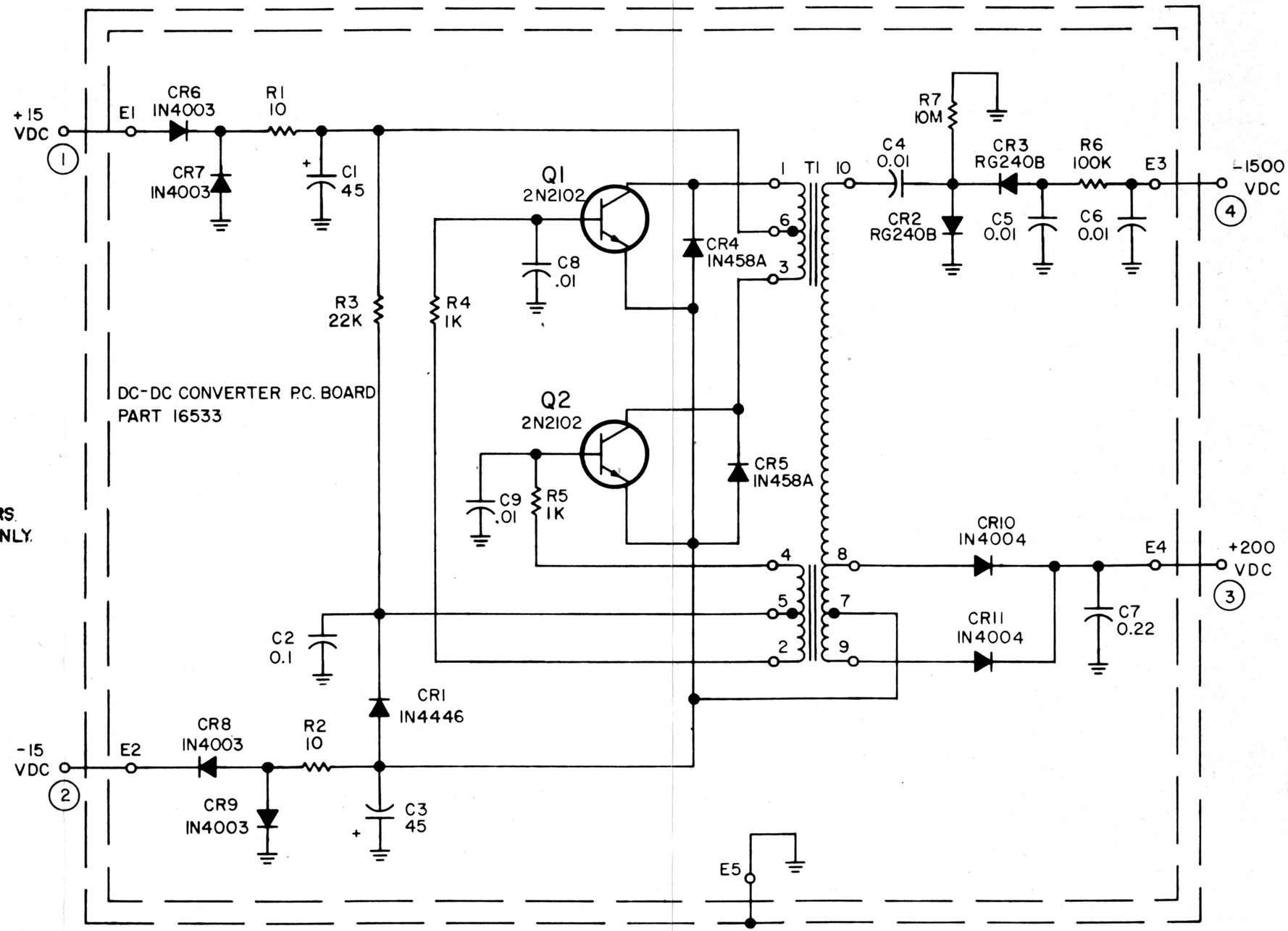

Figure 4-10 Type 764006 DC-DC Converter (A2A5) Schematic Diagram 32874

NOTES:
1. UNLESS OTHERWISE SPECIFIED:
   a) RESISTANCE IS IN OHMS, ±5%, 1/4W.
   b) CAPACITANCE IS IN pF.
2. ONLY PINS USED BY EACH MODULE ARE SHOWN. SOME OTHER PINS OF XA15-XA18 HAVE SIGNALS CONNECTED, FOR MOTHER BD PRINTED WIRING PURPOSES. THIS ALSO PERTAINS TO XA6 & XA8.
3. (S) INDICATES, THAT PIN IS USED FOR COAX SHIELD.
4. POSITIONS A19(XA19) AND A20(XA20), NOT SHOWN, ARE SPARE POSITIONS FOR RECEIVER OPTIONS.
5. FREQUENCY EXTENDER 861XA/FE-2 IS STANDARD ON THE WJ-8617A & WJ-8618A RCVRS, OPTIONAL ON THE WJ-8616A RCVR.
6. DASHED LINE SHOWS 20-500MHz INPUT CONNECTION WHEN 861XA/FE-2 IS NOT IMPLEMENTED.
7. COAX CONNECTIONS BETWEEN PC CONNECTIONS ARE WIRE WRAPPED.

IF BW	21.4MHz IF AMPLIFIER		FM DEMODULATOR	
	TYPE	SCHEM	TYPE	SCHEM
10kHz	724006-1	370348	794106-1	370347
20kHz	724006-2	370348	794106-2	370347
50kHz	724006-3	370348	794107-1	370346
100kHz	724006-4	370348	794107-2	370346
250kHz	724006-5	370348	794107-3	370346
500kHz	724019-1	470305	794104-2	470157
1MHz	724007-1	470164	794104-1	470157
2MHz	724007-2	470164	794105-1	470158
4MHz	724008-1	370349	794105-2	470158
300KHz	724006-6	370348	794107-4	370346
6kHz	724006-7	370348	794106-3	370347
40kHz	724006-8	370348	794107-5	370346
75kHz	724006-9	370348	794107-6	370346

MODULE	GND CONNECTIONS ⏚
A1, A2	1, 2, 59, 60
A3-A6	1, 2, 57, 58
A7	2, 8, 14, 18, 44, 48, 52, 56
A9-A12	2, 3, 4, 27, 28, 30
A15-A18	2, 29, 30

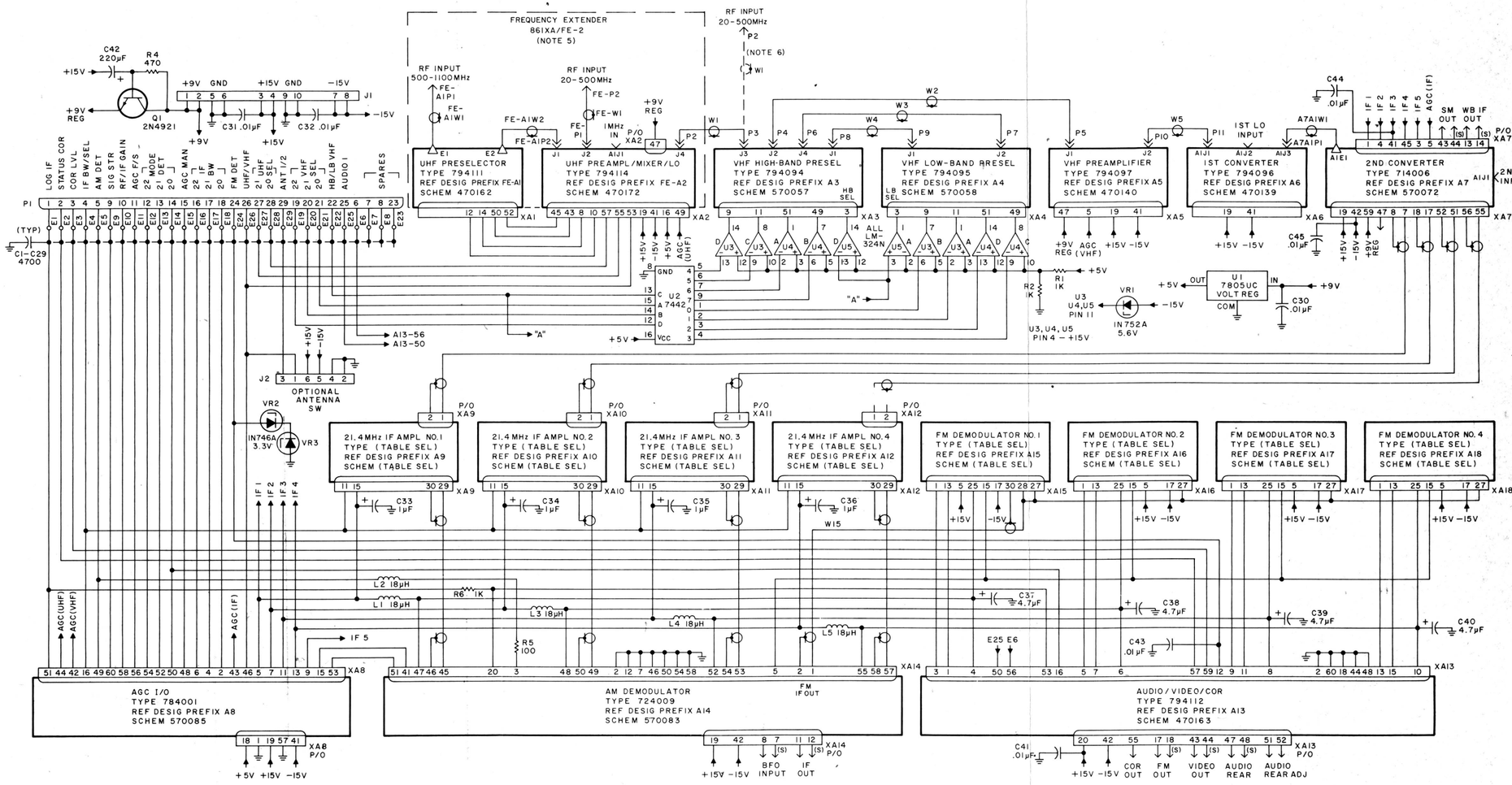

Figure 4-11. Type 794084 RF/IF Motherboard (A3) Schematic Diagram 570079

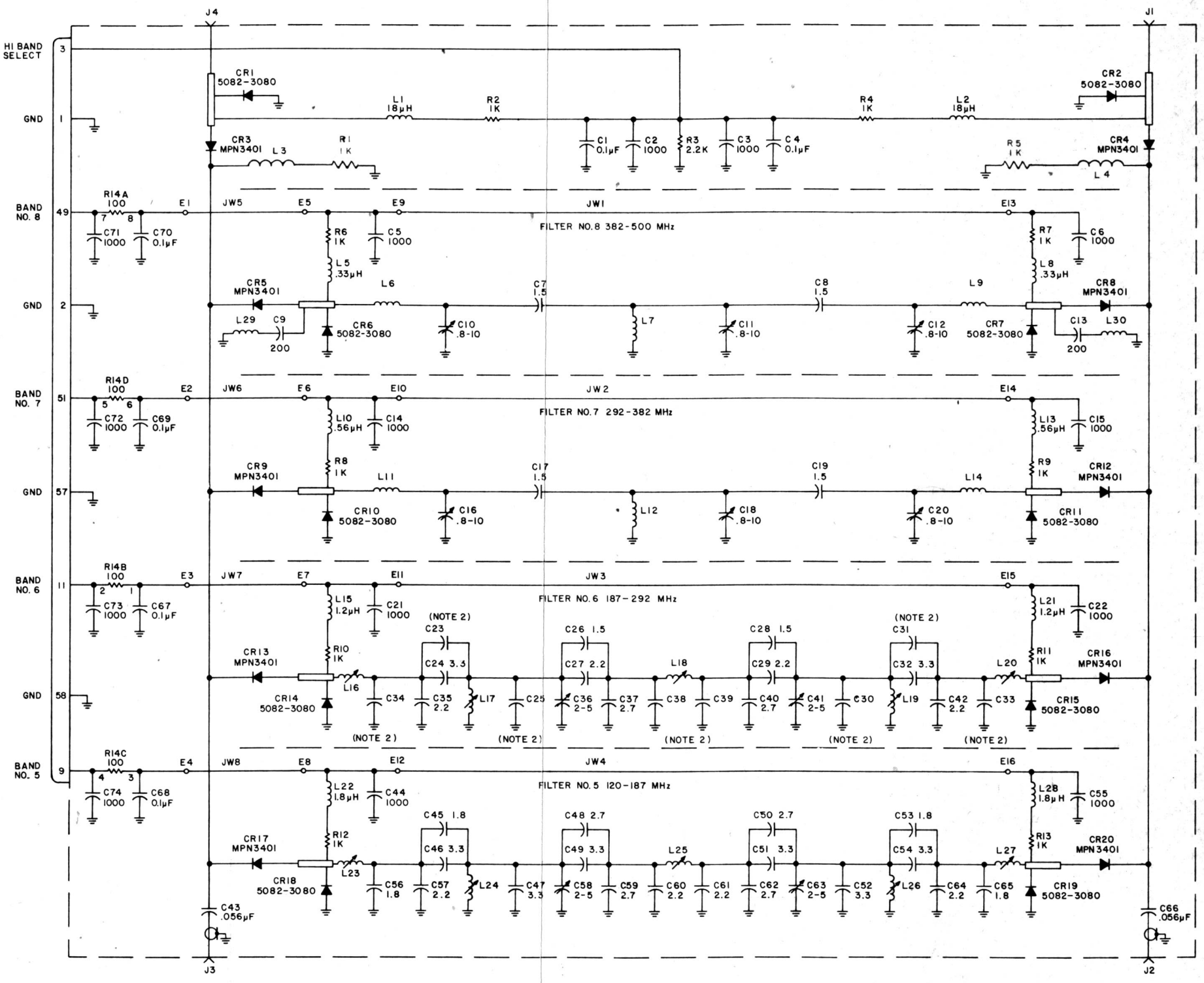

NOTES:
1. UNLESS OTHERWISE SPECIFIED:
   a) RESISTANCE IS IN OHMS, ± 5 %, 1/8W.
   b) CAPACITANCE IS IN pF.
2. C23, C25, C30, C31, C33, C34, C38, C39, ARE TO BE SHOWN, BUT DOCUMENTED AS NOT USED.

Figure 4-12. Type 794094-1, VHF High Band Preselector (A3A3) Schematic Diagram 570057

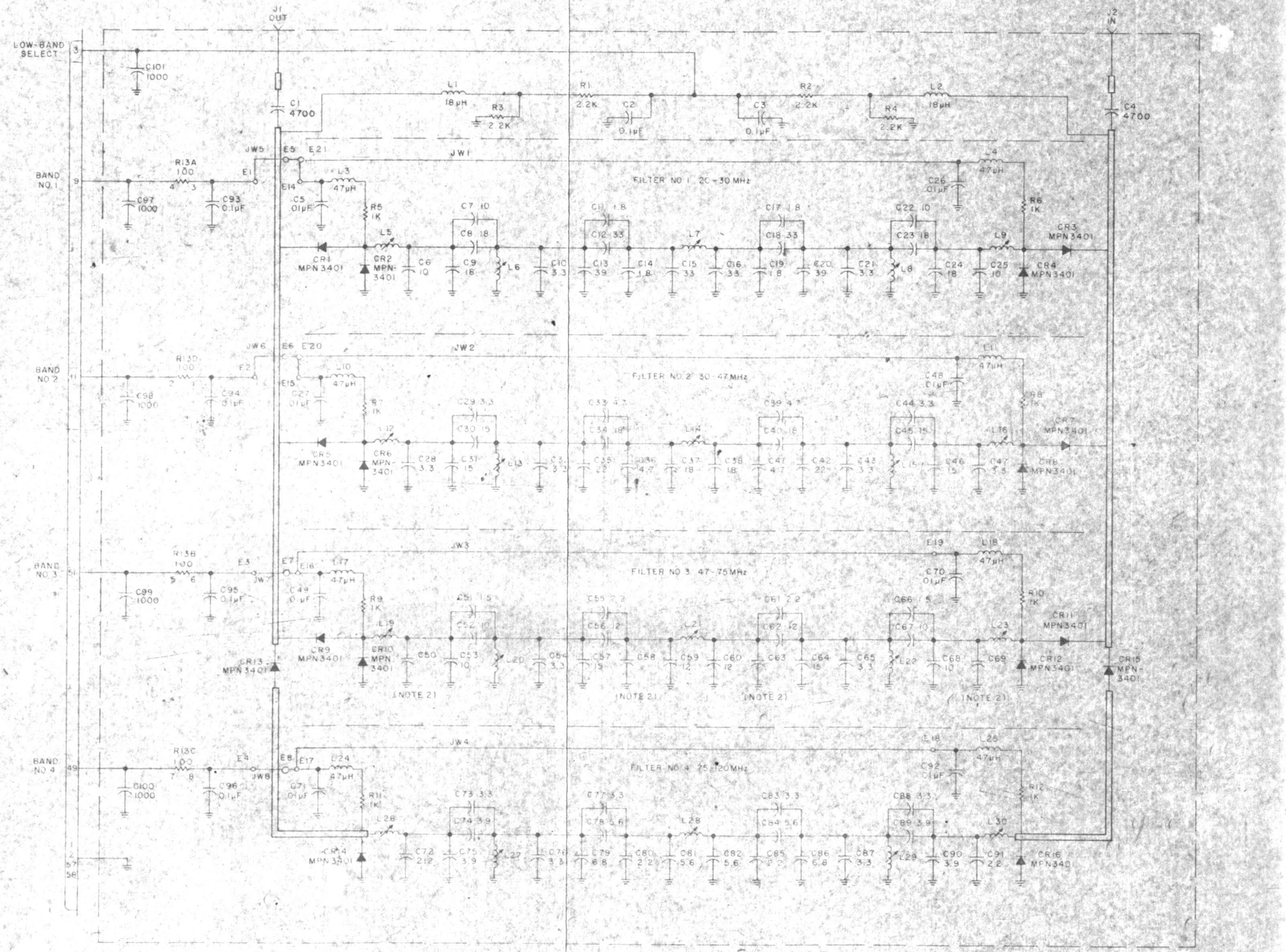

NOTES:
1. UNLESS OTHERWISE SPECIFIED,
   a) RESISTANCE IS IN OHMS ±5% 1/8W
   b) CAPACITANCE IS IN pF
2. C50, C58, C65, C69 ARE TO BE SHOWN BUT DOCUMENTED AS NOT USED

Figure 4-13. Type 794095-1 VHF Low-Band Preselector (A3A4) Schematic Diagram 570058.

NOTE:

1. UNLESS OTHERWISE SPECIFIED:
   a) RESISTANCE IS IN OHMS, ±1%, 1/10W.
   b) CAPACITANCE IS IN µF.
2. L2 PARASITIC OF C2.

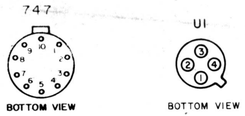

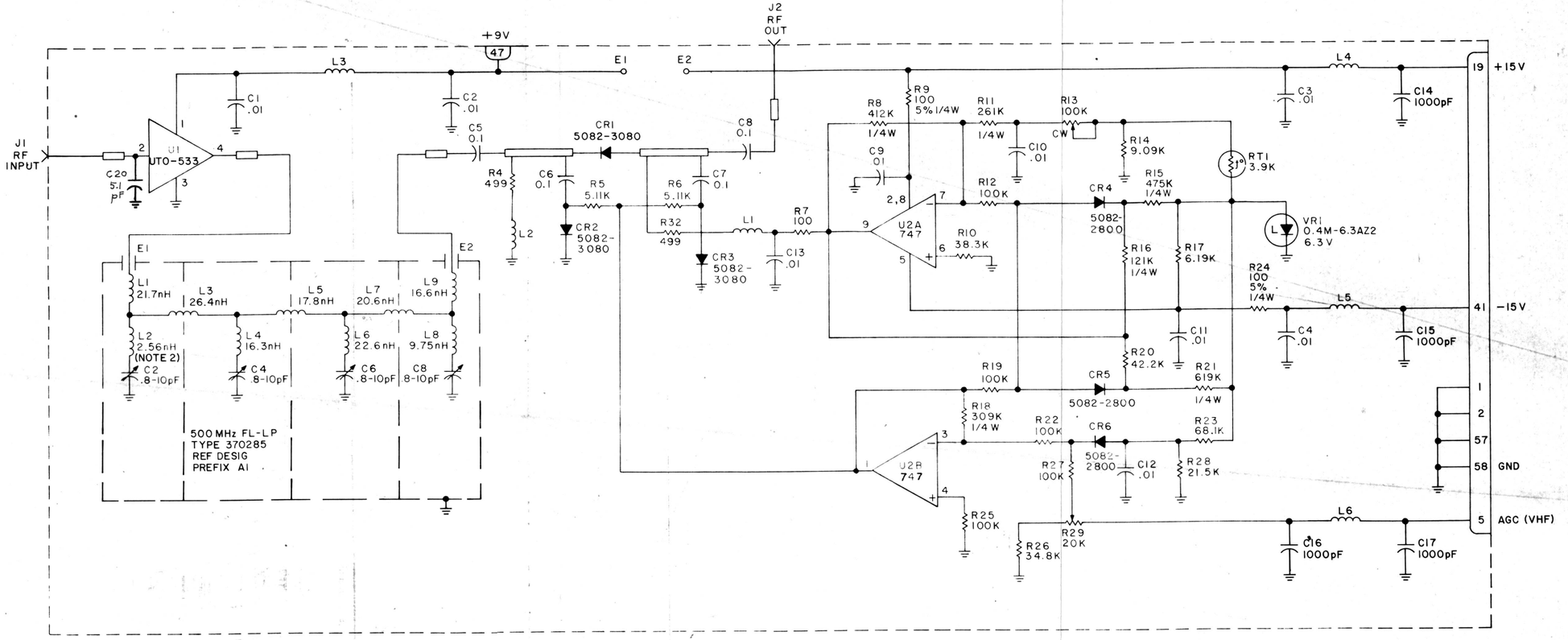

Figure 4-14. Type 794097-1 Pre Amplifier (A3A5)
Schematic Diagram 470140

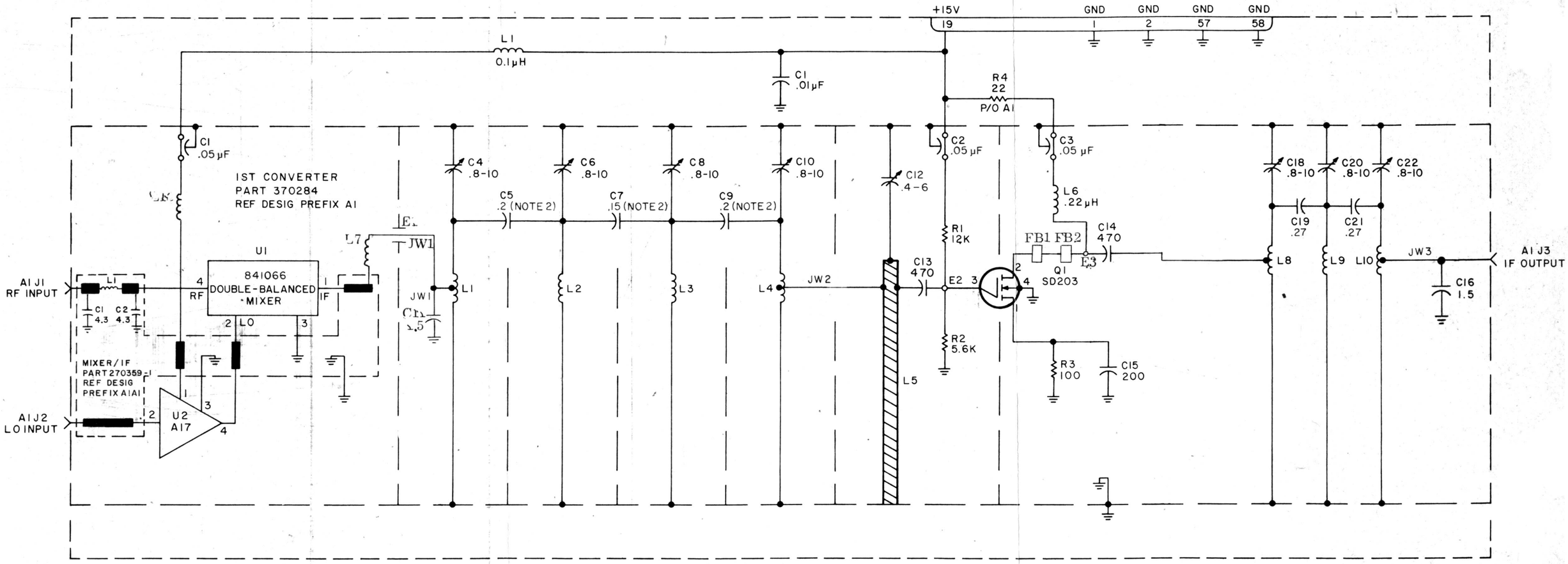

NOTES:

1. UNLESS OTHERWISE SPECIFIED:
   a) RESISTANCE IS IN OHMS, ± 5%, 1/8W
   b) CAPACITANCE IS IN pF
2. NOMINAL VALUE, FINAL VALUE FACTORY SELECTED.

M2B, A17



BOTTOM VIEW

Figure 4-15. Type 794096-1 1st Converter (A3A6) Schematic Diagram 470139

NOTES:
UNLESS OTHERWISE SPECIFIED:
a) RESISTANCE IS IN OHMS, ±5%, 1/8W.
b) CAPACITANCE IS IN pF.
c) INDUCTANCE IS IN µH.

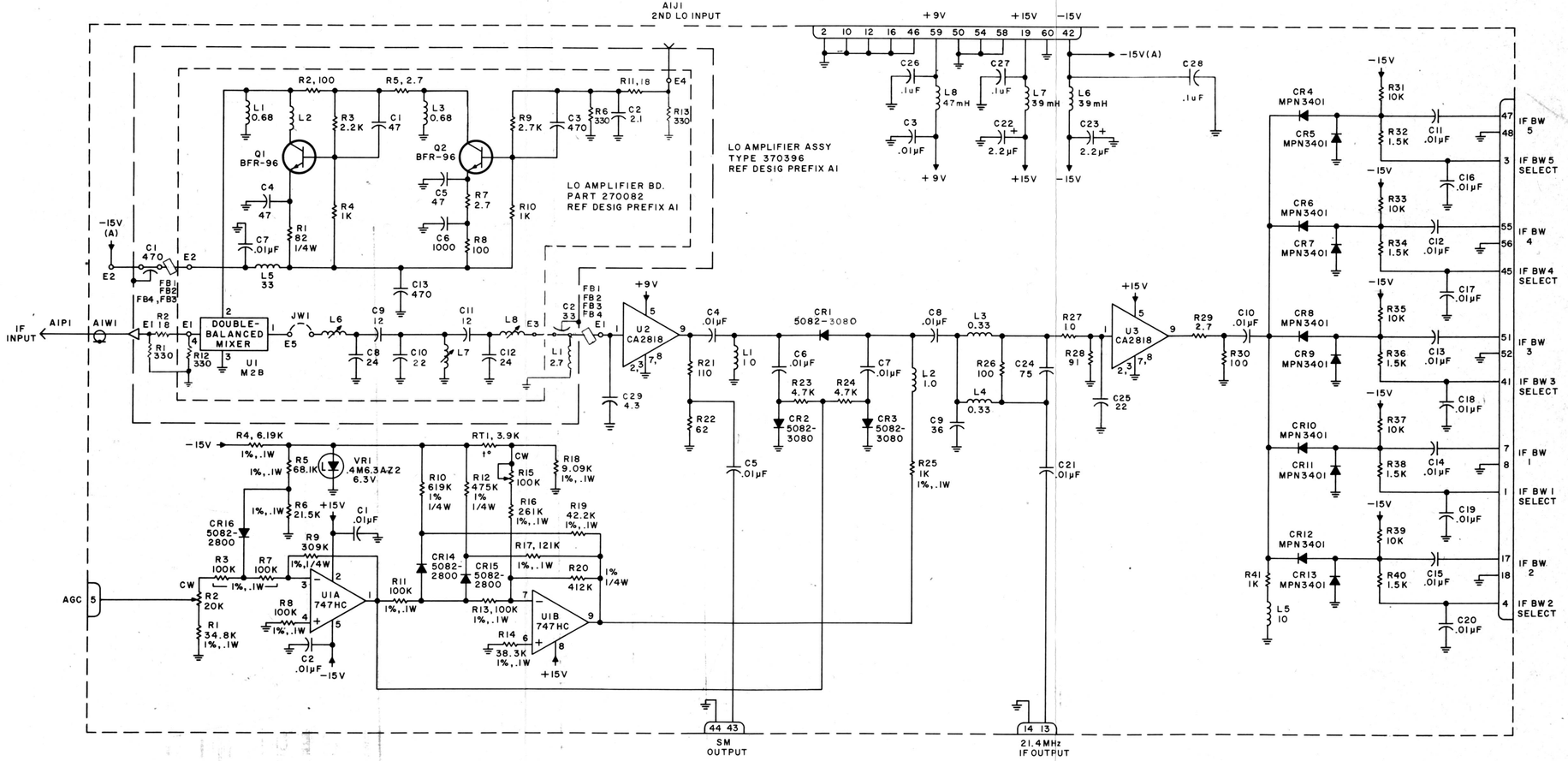

Figure 4-16. Type 714006 2nd Converter (A3A7) Schematic Diagram 570072

NOTES:
1. UNLESS OTHERWISE SPECIFIED:
   a) RESISTANCE IS IN OHMS, ± 5%, 1/8W.
   b) CAPACITANCE IS IN µF.
2. U3, U4, U2 & U9 ARE SHOWN IN LOGIC STATE "Ø".

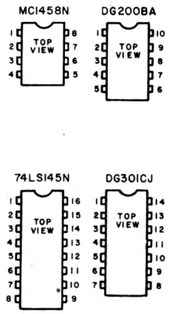

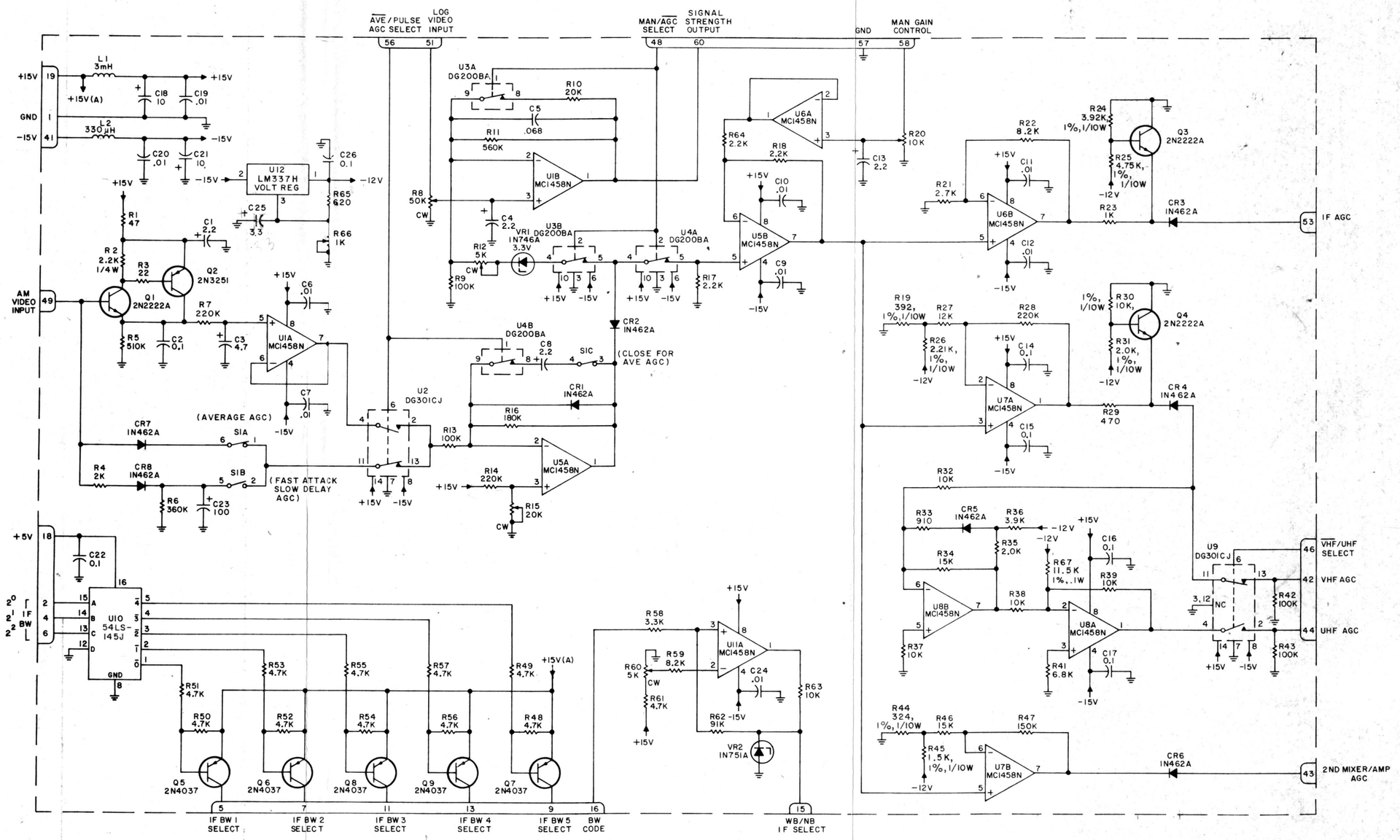

Figure 4-17. Type 784001-1 AGC Amplifier (A3A8)
Schematic Diagram 570085

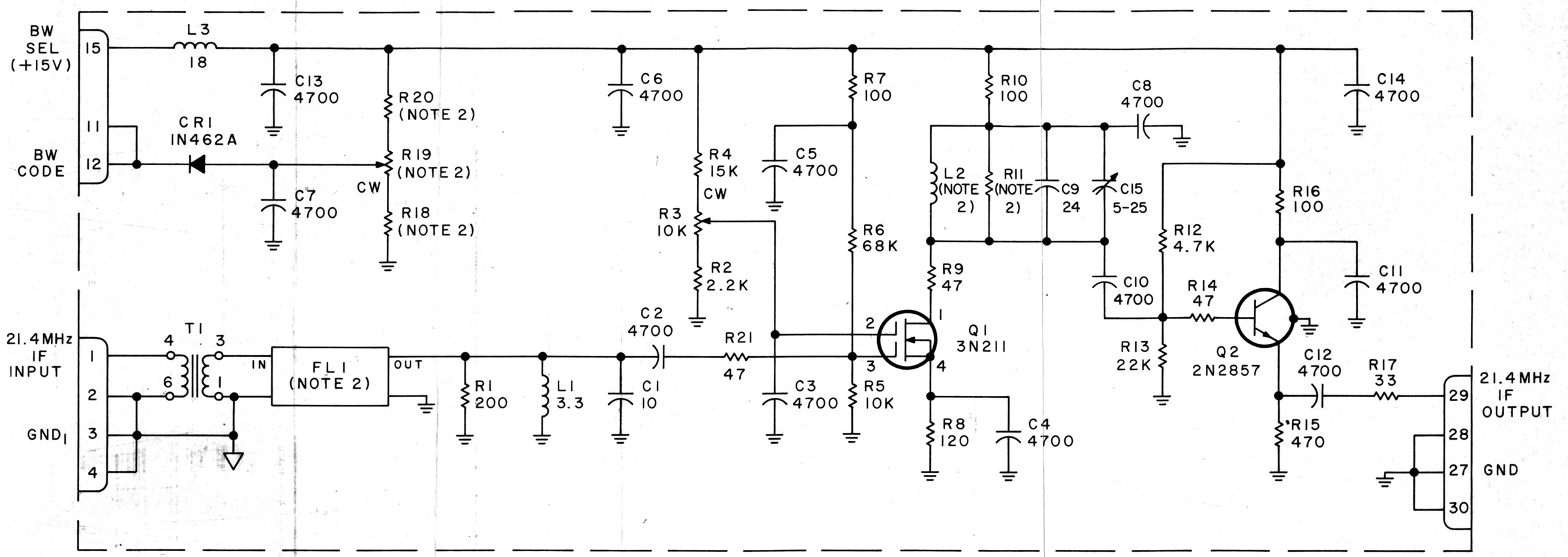

NOTES:

1. UNLESS OTHERWISE SPECIFIED:
   a) RESISTANCE IS IN OHMS, ±5%, 1/4W.
   b) CAPACITANCE IS IN pF.
   c) INDUCTANCE IS IN µH.
2. DIFFERENCE BETWEEN TYPE NO.S IS LISTED IN TABLE.

TYPE	BW	FL1	R11	R18	R19	R20			L2
724006-1	10kHz	92001	N/U	100	500	3.3K			22295-66
724006-2	20kHz	92002	3.9K	330	500	2.7K			1.0
724006-3	50kHz	92000	1.3K	680	500	2.7K			1.0
724006-4	100kHz	92024	750	680	1K	2.2K			1.0
724006-5	250kHz	92186	750	1K	1K	2.2K			1.0
724006-6	300kHz	92232	750	1K	1K	2.2K			1.0
724006-7	6kHz	92197	N/U	100	500	3.3K			22295-66
724006-8	40kHz	92198	1.3K	680	500	2.7K			1.0
724006-9	75kHz	92230	1.0K	680	1K	2.2K			1.0

Figure 4-18. Type 724006 21.4 MHz IF Amplifier (A3A9-A3A12) Schematic Diagram 370348

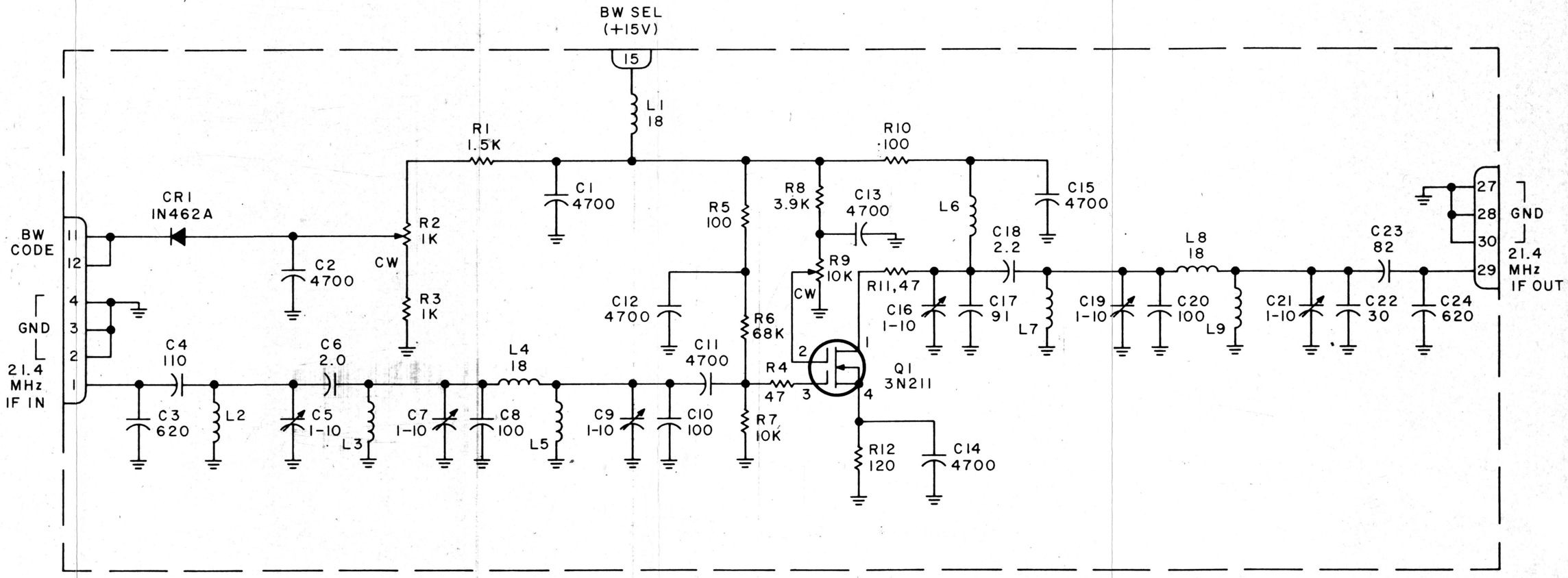

NOTES:
UNLESS OTHERWISE SPECIFIED:
a) RESISTANCE IS IN OHMS, ±5%, 1/8W.
b) CAPACITANCE IS IN pF.
c) INDUCTANCE IS IN µH.

Figure 4-19. Type 724012 IF Amplifier (500kHz BW) (A3A9-A3A12)
Schematic Diagram 370345

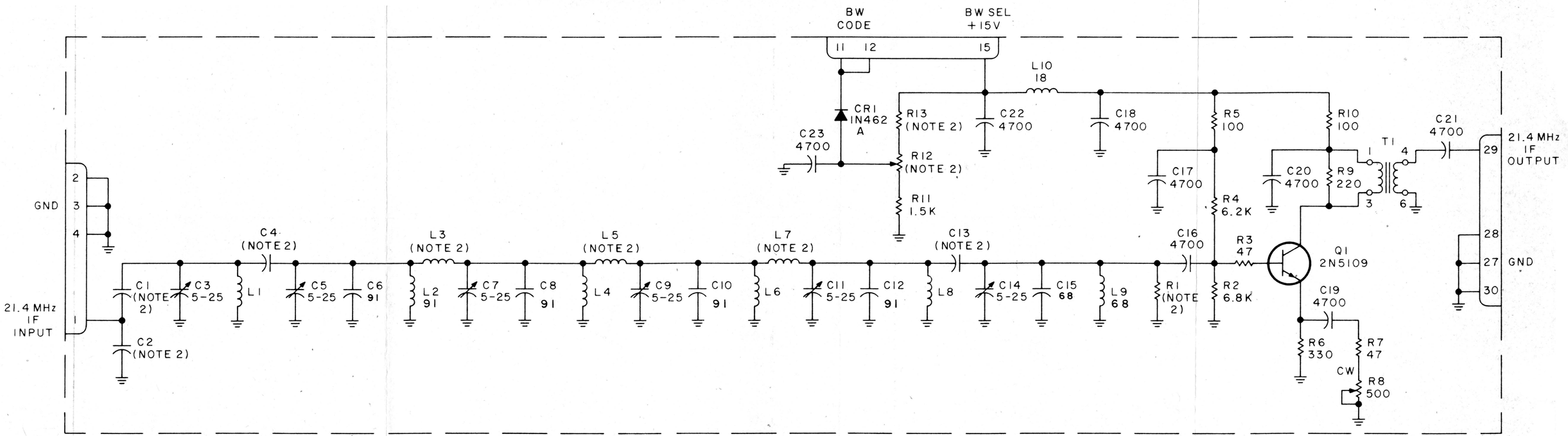

NOTES:

1. UNLESS OTHERWISE SPECIFIED:
   a) RESISTANCE IS IN OHMS, ±5%, 1/4W.
   b) CAPACITANCE IS IN pF.
   c) INDUCTANCE IS IN µH.
2. DIFFERENCE BETWEEN -1, -2 IS LISTED IN TABLE.

TYPE	IF BW	C1	C2	C4	L3	L5	L7	C13	R1	R12	R13
724007-1	1 MHz	120	360	4.3	12	15	12	5.1	1.3K	500	1.5K
724007-2	2 MHz	120	300	8.2	8.2	8.2	8.2	8.2	470	1K	1K

Figure 4-2Q. Type 724007-1,-2 21.4 MHz IF Amplifier (A3A9-A3A12) Schematic Diagram 470164.

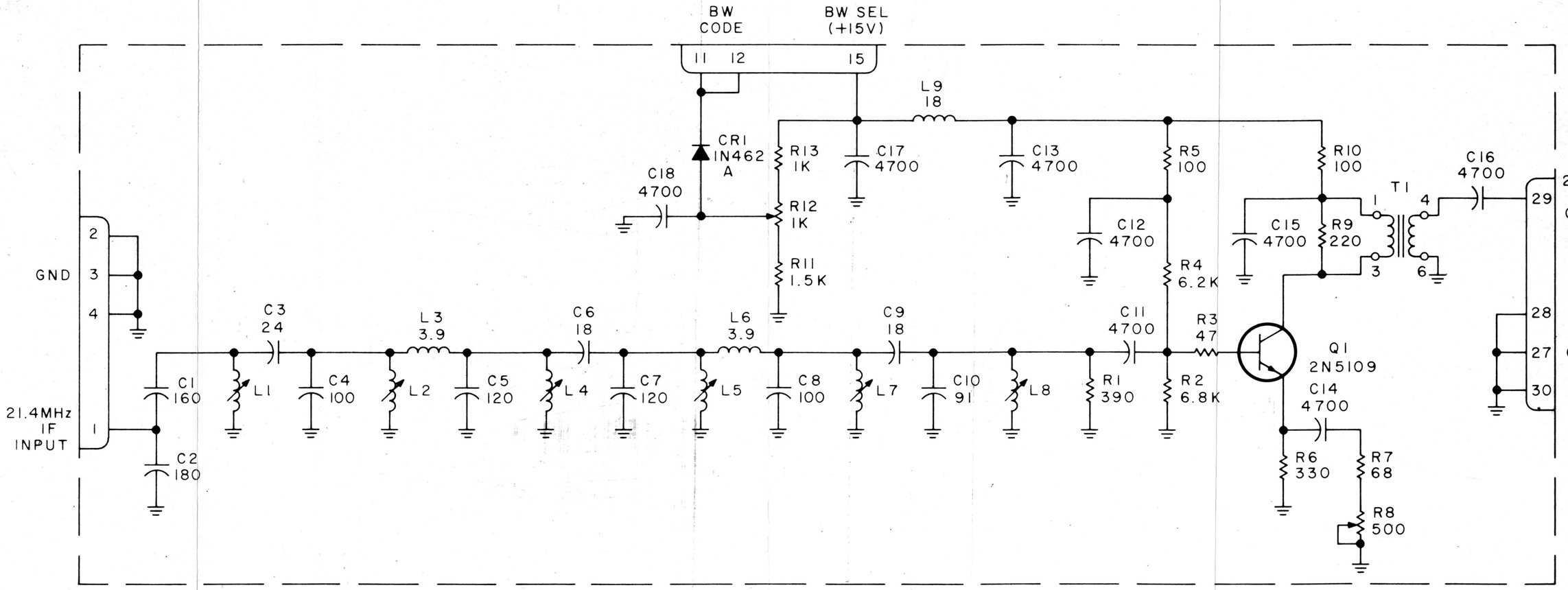

NOTES:
UNLESS OTHERWISE SPECIFIED:
a) RESISTANCE IS IN OHMS, ±5%, 1/4W.
b) CAPACITANCE IS IN pF.
c) INDUCTANCE IS IN µH.

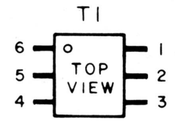

Figure 4-21. Type 724008 21.4MHz IF Amplifier (A3A9-A3A12) Schematic Diagram 370349

NOTE:
UNLESS OTHERWISE SPECIFIED:
a) RESISTANCE IS IN OHMS, ±5%, 1/4W.
b) CAPACITANCE IS IN µF.

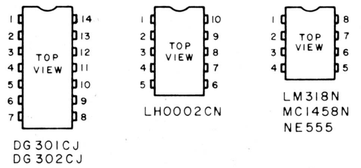

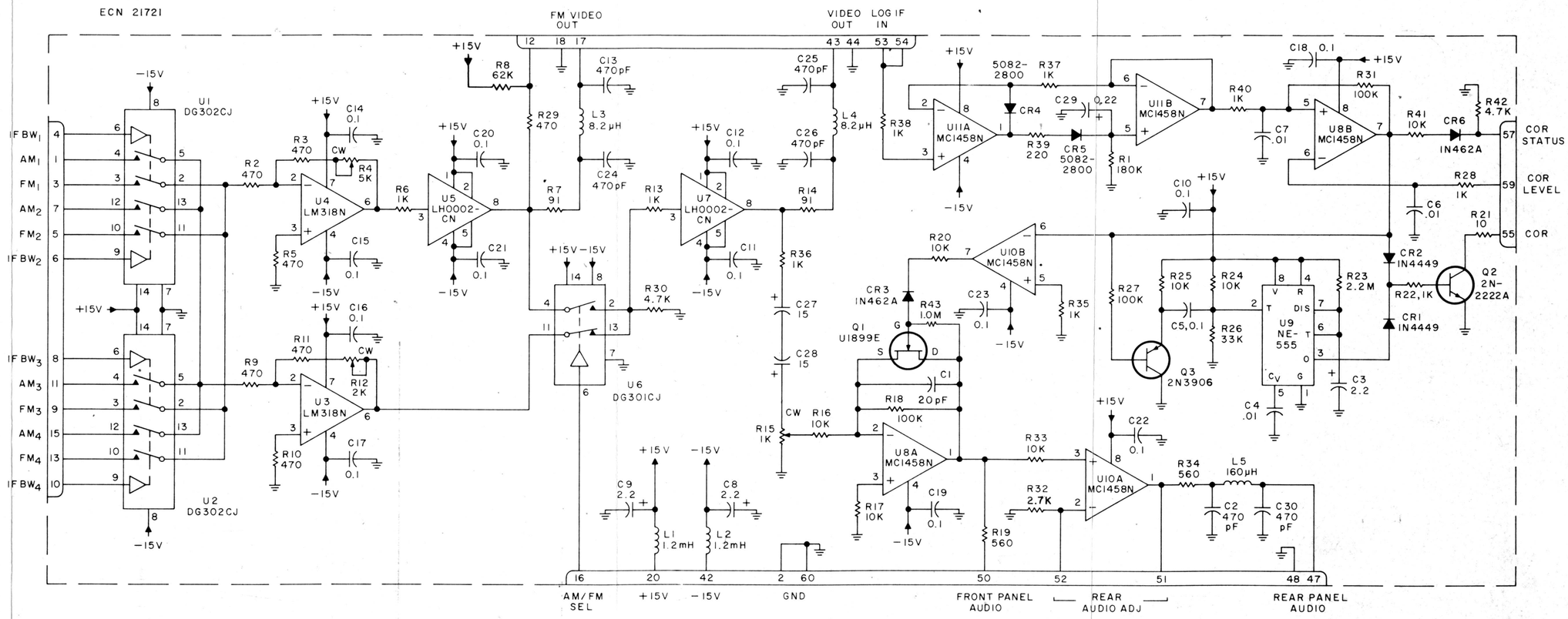

Figure 4-22. Type 794112-1Audio/Video/COR (A3A13) Schematic Diagram 470163

ECN 21743

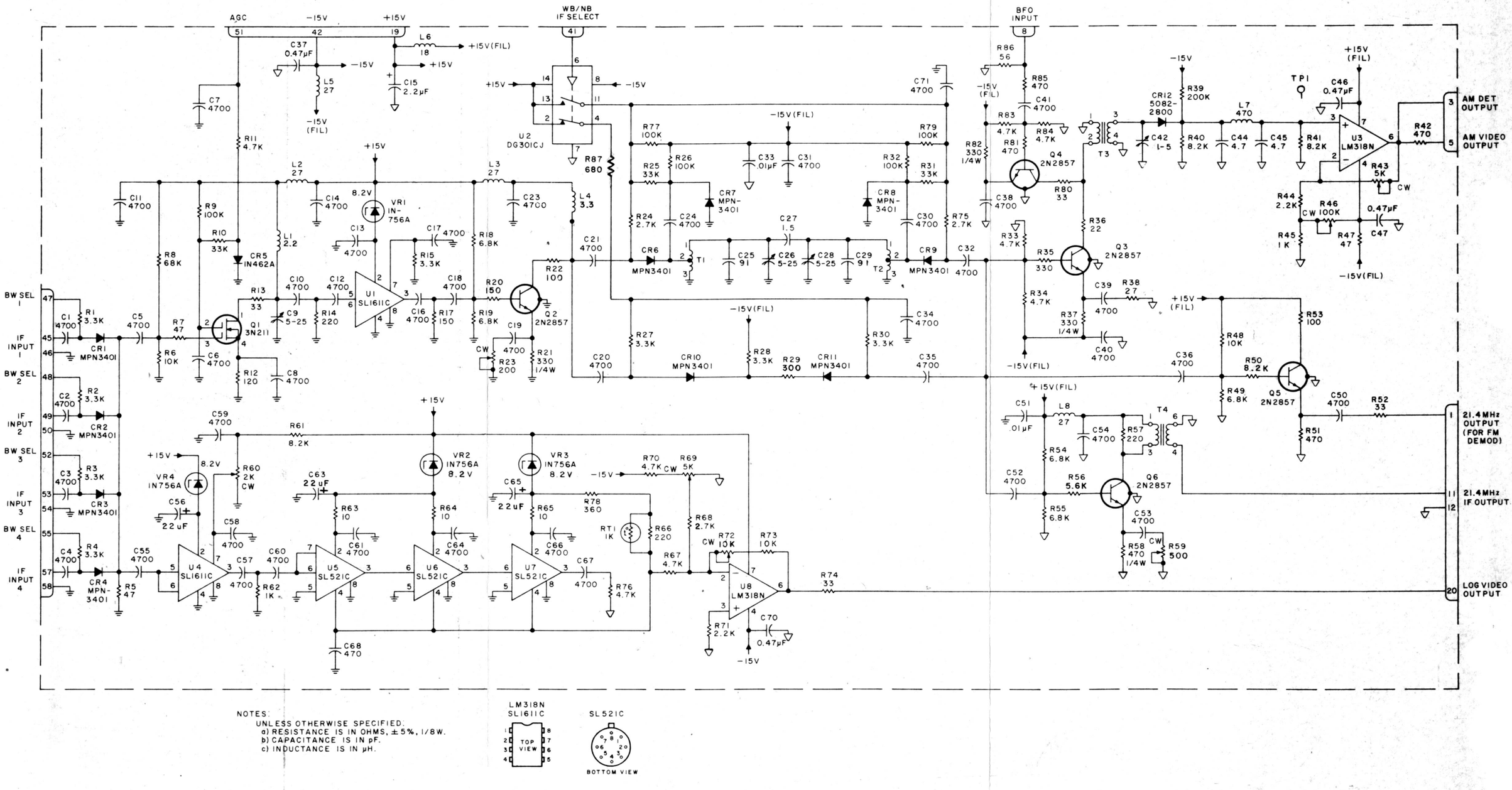

NOTES:
UNLESS OTHERWISE SPECIFIED:
a) RESISTANCE IS IN OHMS, ±5%, 1/8W.
b) CAPACITANCE IS IN pF.
c) INDUCTANCE IS IN µH.

LM318N
SL1611C

SL521C

Figure 4-23 Type 724009-1 AM Demod/IF Output Amplifier (A3A14)
Schematic Diagram 570083

NOTES:

1. UNLESS OTHERWISE SPECIFIED:
   a) RESISTANCE IS IN OHMS, ±1%, 1/10W
   b) CAPACITANCE IS IN µF.
   c) INDUCTANCE IS IN mH.
2. DIFFERENCE BETWEEN TYPE NO.S IS LISTED IN TABLE A.
3. NOMINAL VALUE: FINAL VALUE FACTORY SELECTED.

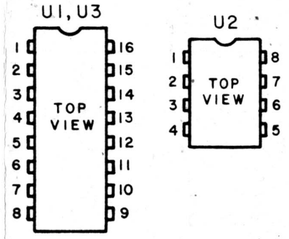

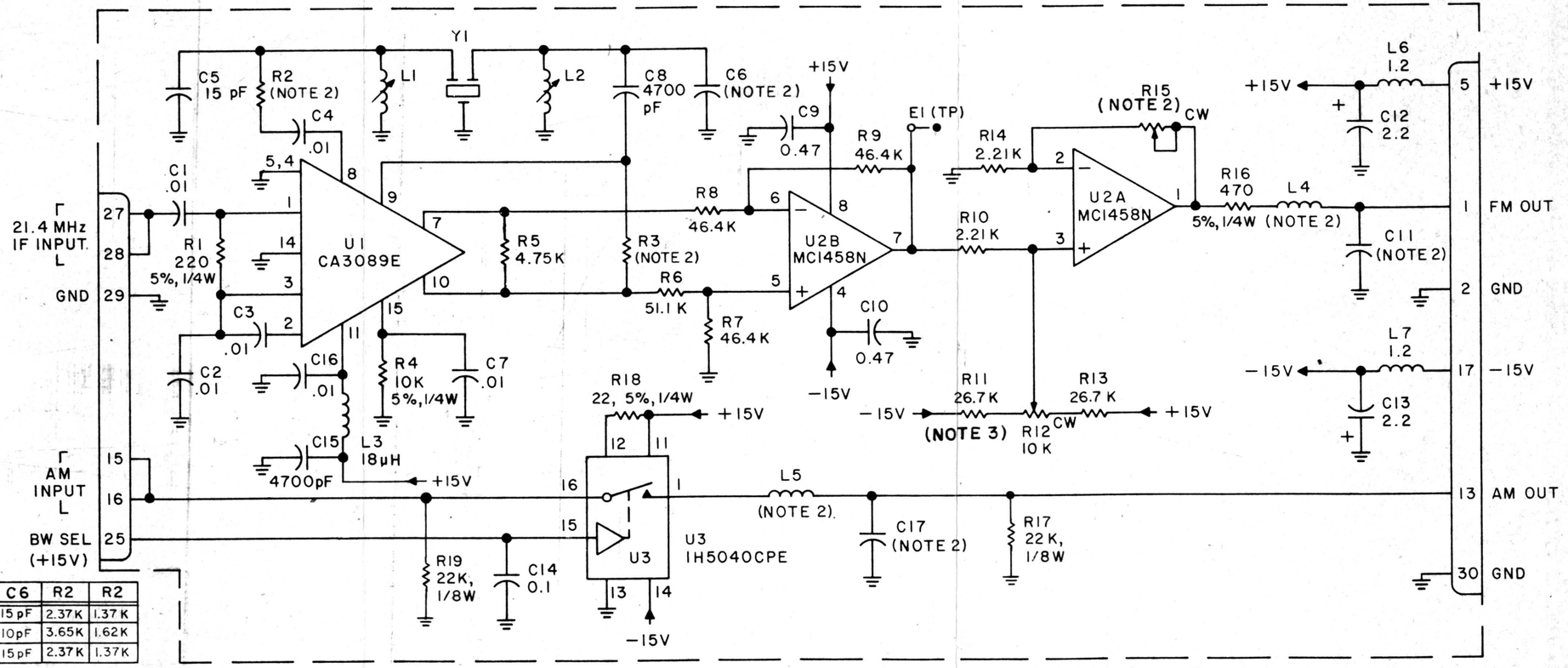

TABLE A

TYPE	IF BW	L4	L5	C11	C17	R15	C6	R2	R2
794106-1	10kHz	22	15	0.1	.068	10K	15pF	2.37K	1.37K
794106-2	20kHz	10	6.8	.056	.056	10K	10pF	3.65K	1.62K
794106-3	.6kHz	47	22	0.1	0.1	50K	15pF	2.37K	1.37K

Figure 4-24. Type 794106 FM Demodulator (A3A15-A3A18) Schematic Diagram 370347

NOTES:
1. UNLESS OTHERWISE SPECIFIED:
   a) RESISTANCE IS IN OHMS, ±5%, 1/4W.
   b) CAPACITANCE IS IN µF.
   c) INDUCTANCE IS IN mH.
2. DIFFERENCE BETWEEN TYPE NO.S IS LIST IN TABLE A.

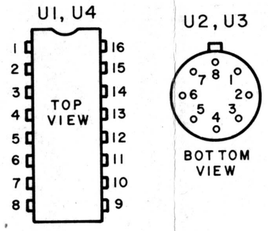

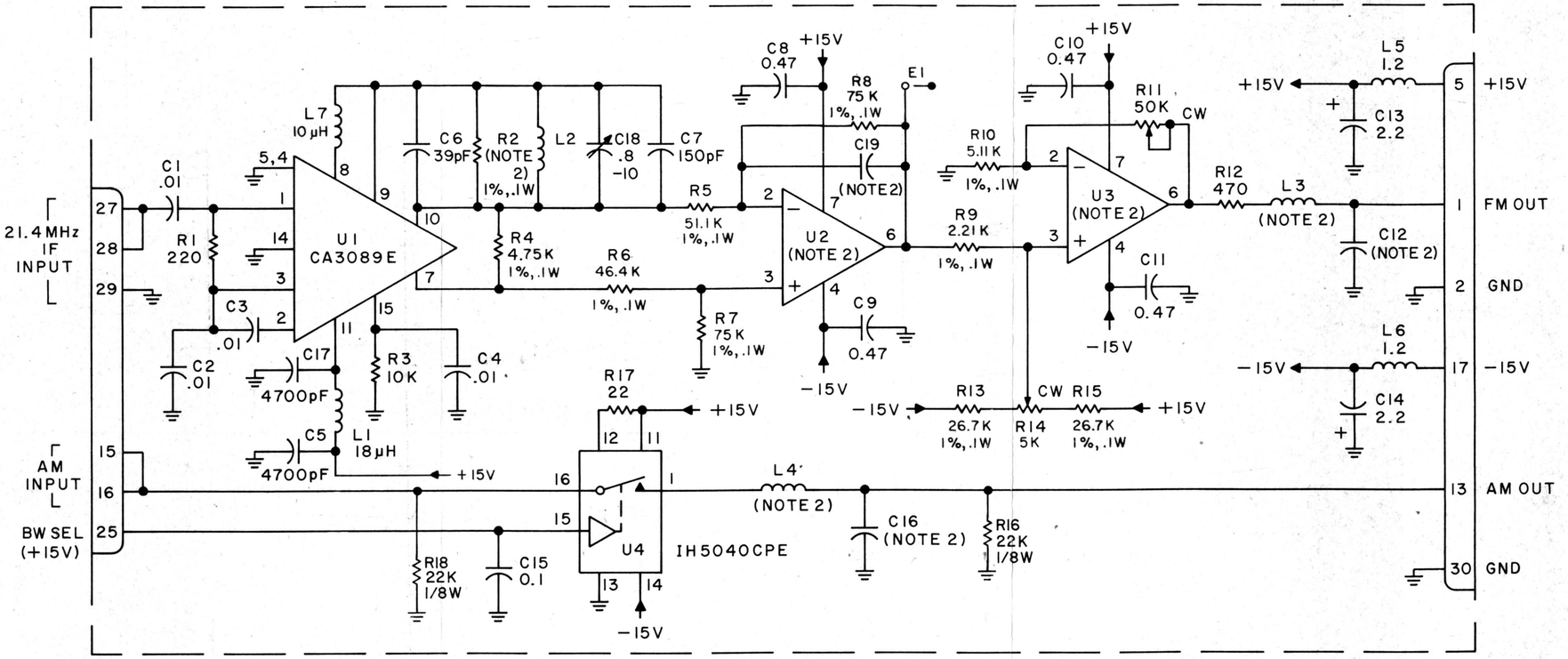

TABLE A

TYPE	IF B.W	L3	L4	C12	C16	R2	U2,U3	C19
794107-1	50kHz	4.7	3.3	.018	.012	4.75K	741HC	N/U
794107-2	100kHz	2.2	1.5	.01	.0068	1.21K	LM318	4.7pF
794107-3	250kHz	1.0	0.68	.0033	.0039	453	LM318	4.7pF
794107-4	300kHz	0.82	0.56	.0027	.0033	392	LM318	4.7pF
794107-5	40kHz	4.7	3.3	.022	.018	4.75K	741HC	N/U
794107-6	75kHz	3.3	2.2	.015	.0082	2.05K	LM318H	4.7pF

Figure 4-25. Type 794107 FM Demodulator (A3A15-A3A18) Schematic Diagram 370346

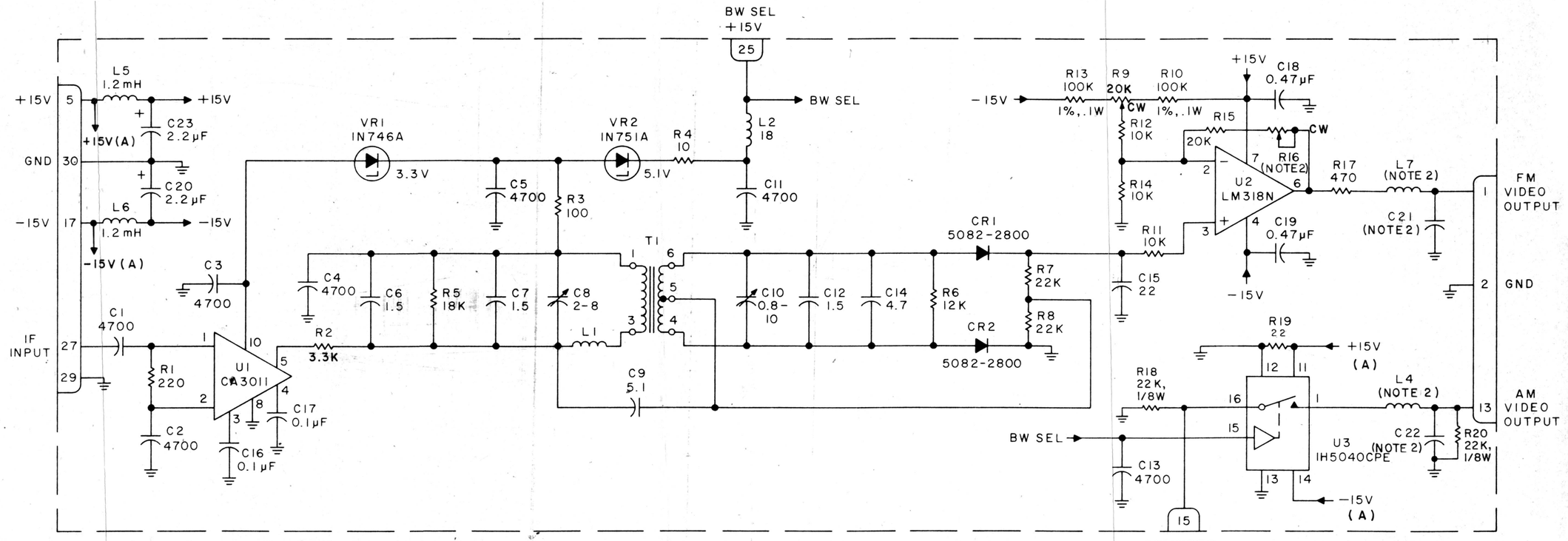

TABLE

TYPE	IF BW	R16	L4	C22	L7	C21
794104-1	1MHz	20K	180	1000	220	820
794104-2	500KHz	100K	360	2200	390	1500

NOTES:

1. UNLESS OTHERWISE SPECIFIED:
   a) RESISTANCE IS IN OHMS, ± 5%, 1/4W.
   b) CAPACITANCE IS IN pF.
   c) INDUCTANCE IS IN μH.
2. DIFFERENCE BETWEEN -1 & -2 IS LISTED IN TABLE.

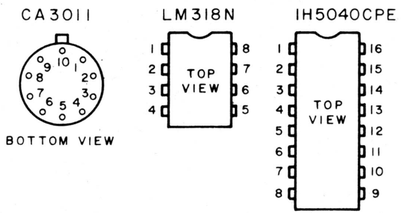

Figure 4-26. Type 794104-1 FM Demodulator (A3A15-A3A18) Schematic Diagram 470157.

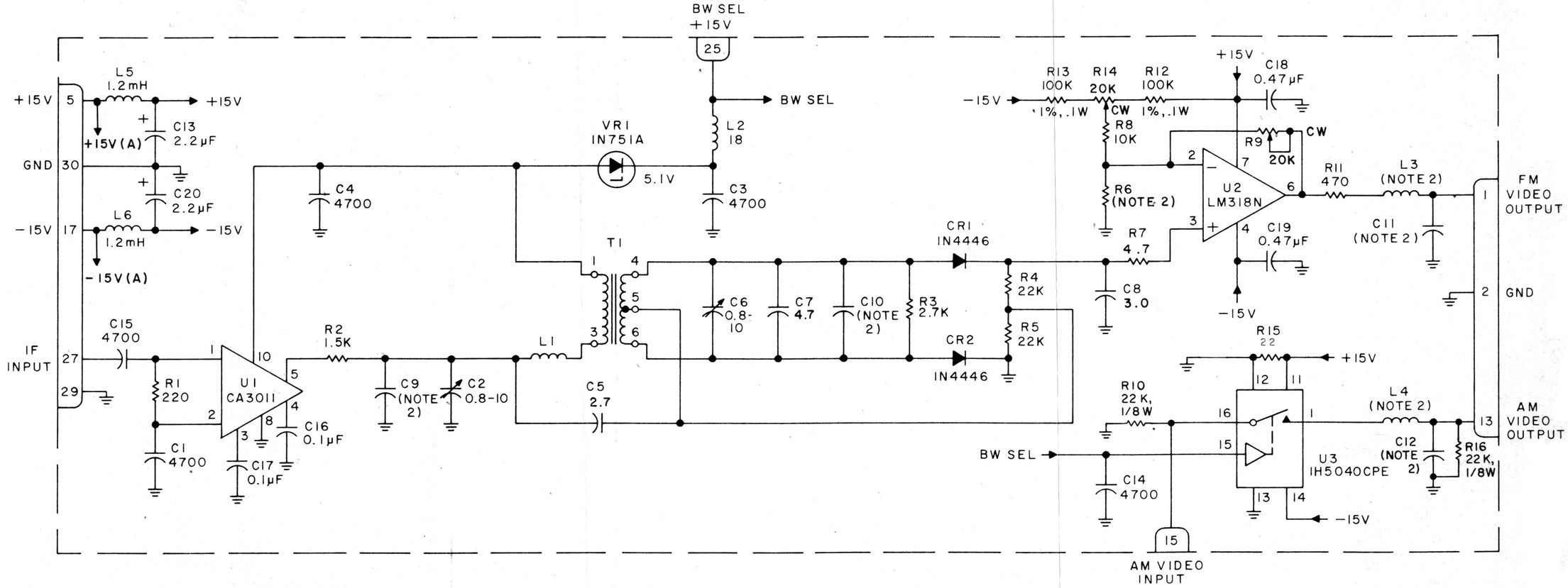

CA3011



LM318N

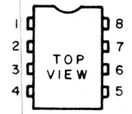

IH5040CPE

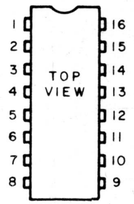

NOTES:

1. UNLESS OTHERWISE SPECIFIED:
   a) RESISTANCE IS IN OHMS, ±5%, 1/4W.
   b) CAPACITANCE IS IN pF.
   c) INDUCTANCE IS IN µH.
2. DIFFERENCE BETWEEN -1, -2 IS LISTED IN TABLE.

TYPE	IF BW			C9	C10	C11	C12	L3	L4	R6
794105-1	2 MHz			N/U	N/U	430	300	75	100	680
794105-2	4 MHz			N/U	N/U	220	180	39	47	1.8K

Figure 4-27. Type 794105 FM Demodulator (A3A15-A3A18) Schematic Diagram 470158.

NOTES:

1. UNLESS OTHERWISE SPECIFIED, CAPACITANCE IS IN μF.
2. (S) INDICATES THAT PIN IS USED FOR COAX SHIELD.
3. REMOVE A1 MODULE (TYPE 798028-2) AND REPLACE WITH 861XA/REF WHEN IMPLEMENTING OPTION (APPLICABLE TO WJ-8616A & WJ-8617A)
4. REMOVE A5 MODULE (TYPE 794179-1) AND REPLACE WITH 861XA/VBFO WHEN IMPLEMENTING OPTION (APPLICABLE TO WJ-8616A & WJ-8617A). SEE TABLE BELOW

TABLE A

	A1		A5	
	STD	OPTION(NOTE 3)	STD (CW)	OPTION(NOTE 4)
WJ-8616A	798028-2	861XA/REF	794179-1	861XA/VBFO
WJ-8617A	798028-2	861XA/REF	794179-1	861XA/VBFO
WJ-8618A	861XA/REF	——	——	——

5. COAX CONNECTIONS BETWEEN P.C. CONNECTORS ARE WIRE WRAPPED.

MODULE	GND CONNECTIONS ⏚
A1	1, 2, 6, 8, 10 THRU 15
A1	43, 45, 47, 50, 52, 54
A1	56, 59, 60
A2	1, 2, 49, 50, 51, 52
A3	1, 2, 45, 46, 55, 56
A4	1, 2, 3
A5	1, 2, 54, 46

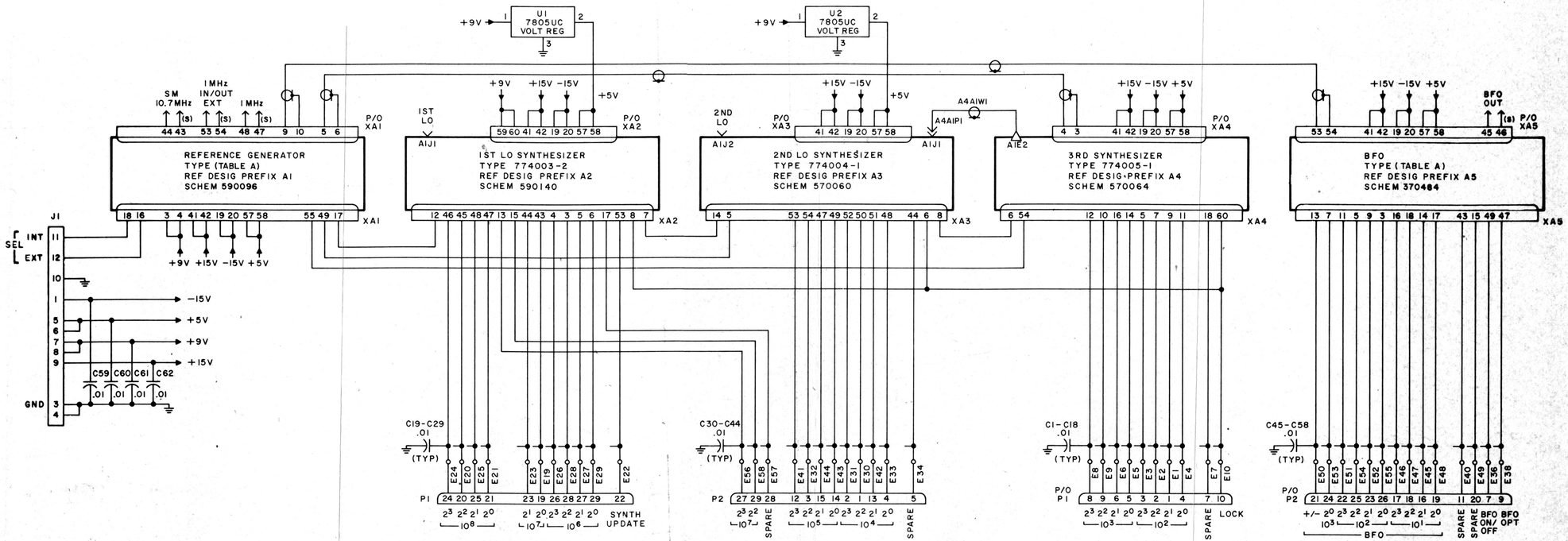

FIGURE 4-28. TYPE 794082, SYNTHESIZER MOTHER BOARD (A4) SCHEMATIC DIAGRAM 570082

NOTES:
UNLESS OTHERWISE SPECIFIED:
RESISTANCE IS IN OHMS ±5%, 1/4W;
CAPACITANCE IS IN µF.

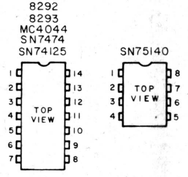

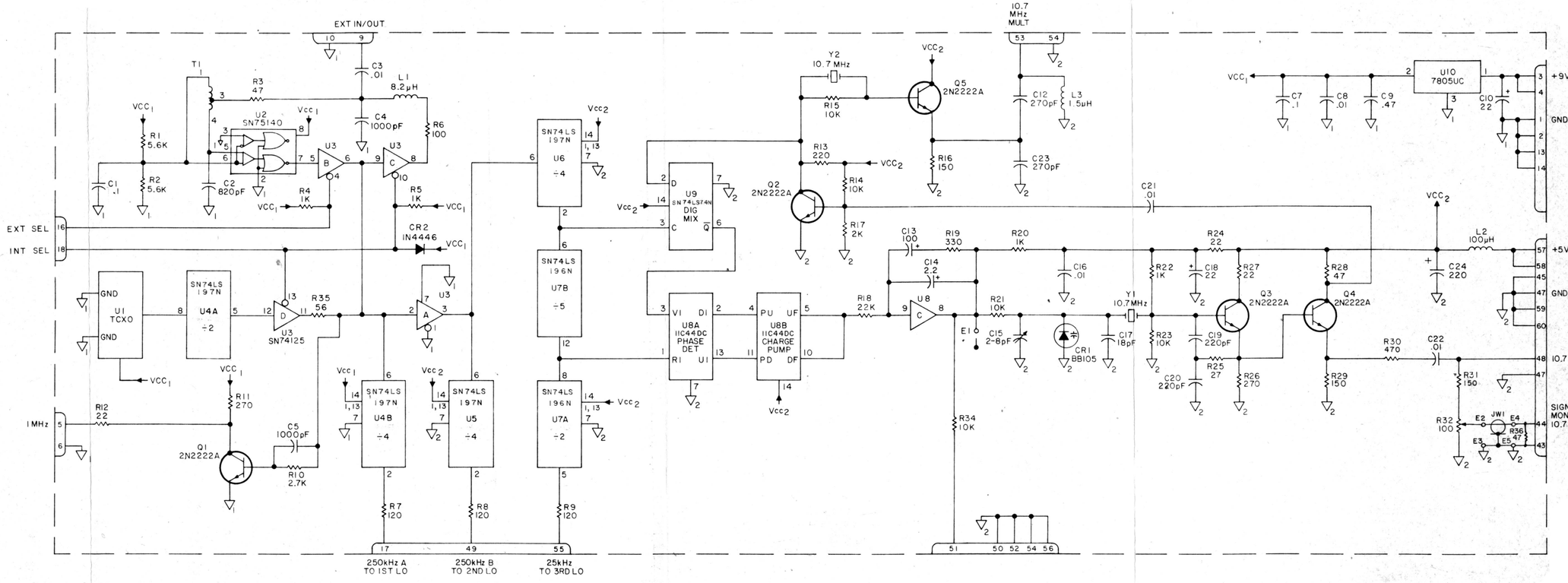

Figure 4-29. Type 794098-1 Reference Generator (A4A1) Schematic Diagram 570063

NOTES:
1. UNLESS OTHERWISE SPECIFIED:
   a) RESISTANCE IS IN OHMS, ±5%, 1/4W; A1A1 MODULE ARE ±5%, 1/8W.
   b) CAPACITANCE IS IN pF.
   c) INDUCTANCE IS IN µH.
2. U6 & U9 ARE PROGRAMED 82S123 IC'S.

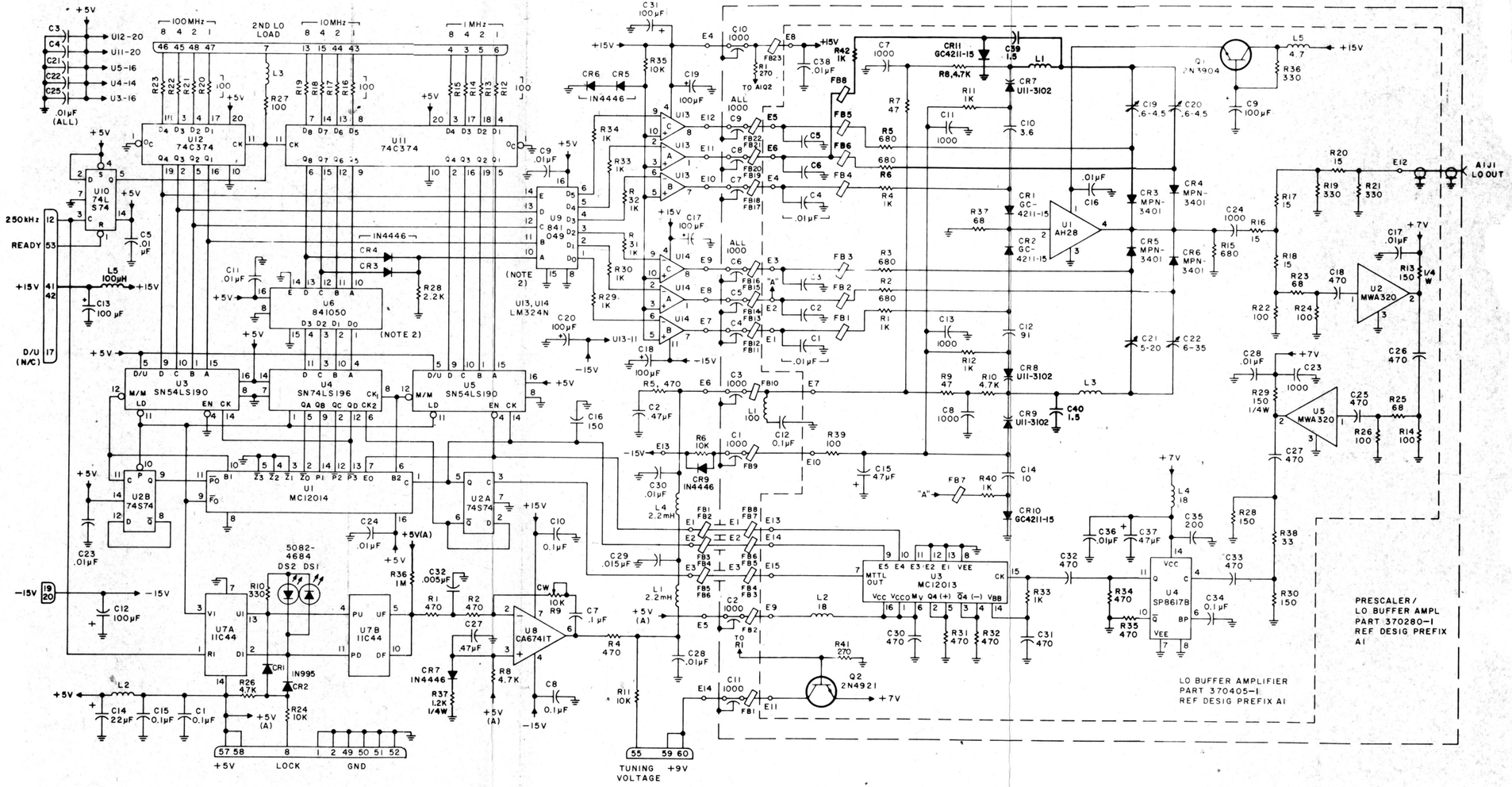

FIGURE 4-30. TYPE 774003-2, 1st LO SYNTHESIZER (A4A2) SCHEMATIC DIAGRAM 590140.

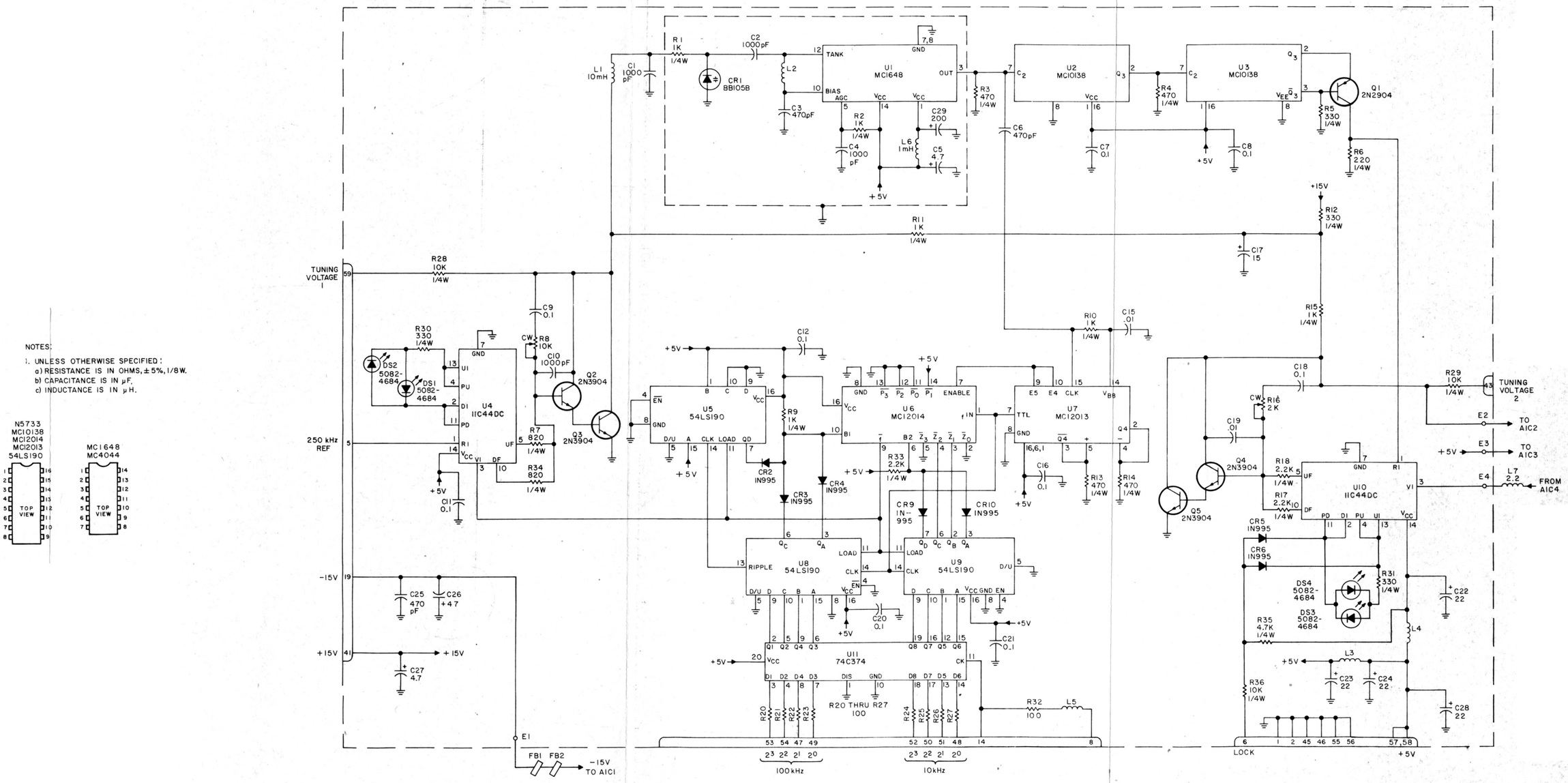

Figure 4-31. Type 774004-1 2nd. L.O. Synthesizer (A4A3)
Schematic Diagram 570060
Sheet 1 of 2

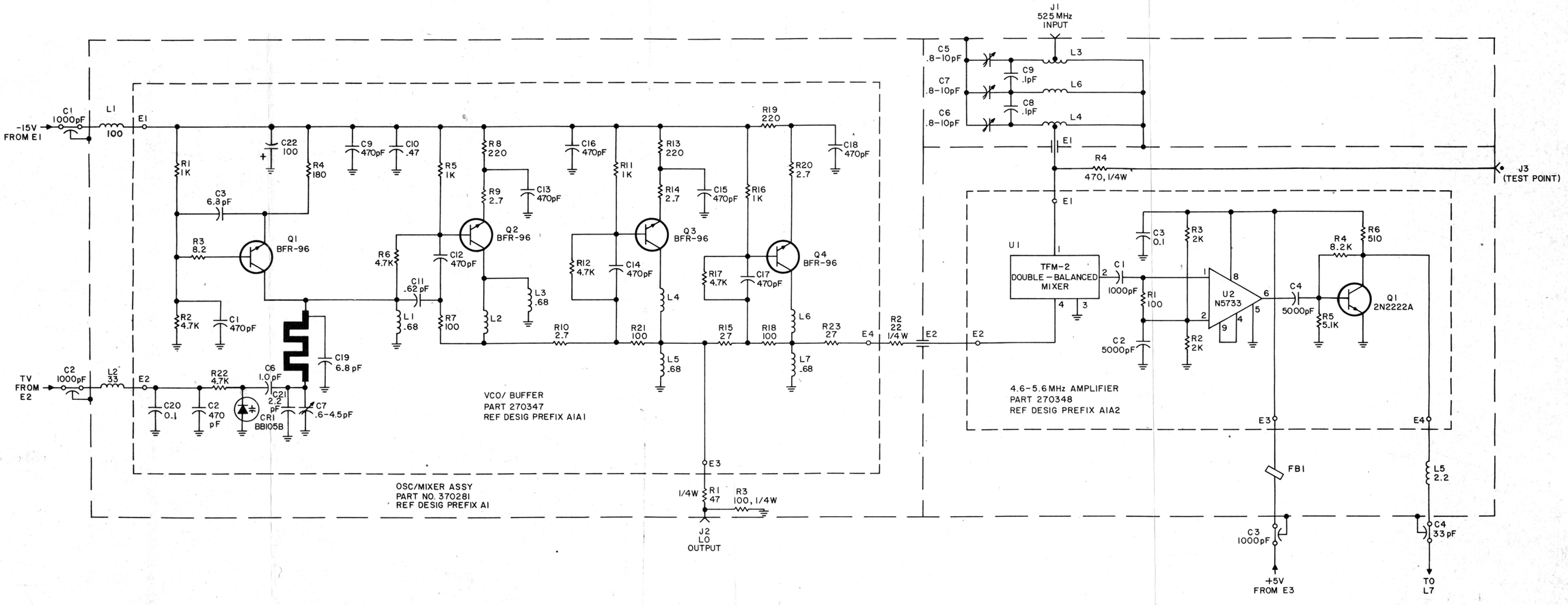

Figure 4-32. Type 774004-1 2nd. L.O. Synthesizer (A4A3)
Schematic Diagram 570060
Sheet 2 of 2.

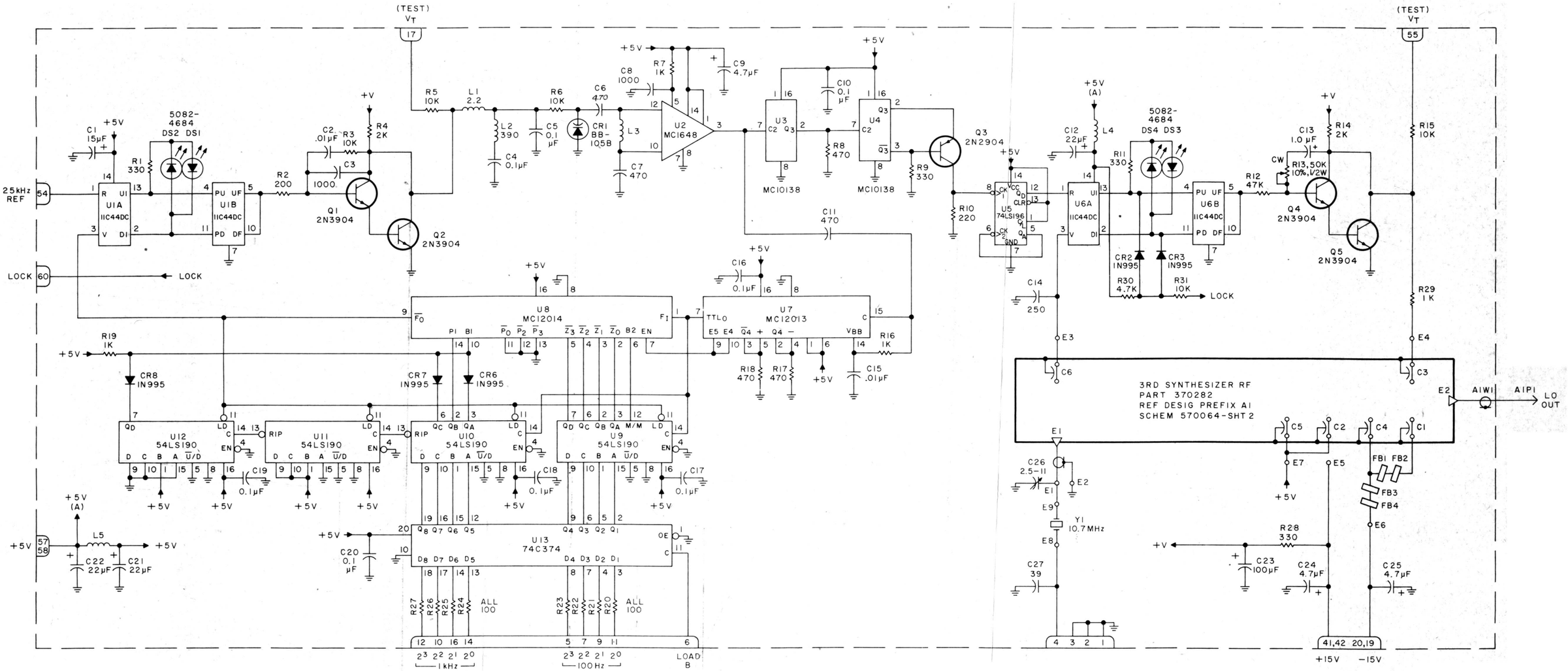

NOTE

1. UNLESS OTHERWISE SPECIFIED:
   a) RESISTANCE IS IN OHMS, ± 5%, 1/8W.
   b) CAPACITANCE IS IN pF.
   c) INDUCTANCE IS IN µH.

Figure 4-33. Type 774005-1 3rd. L.O. Synthesizer (A4A4) Schematic Diagram 570064 Sheet 1 of 2

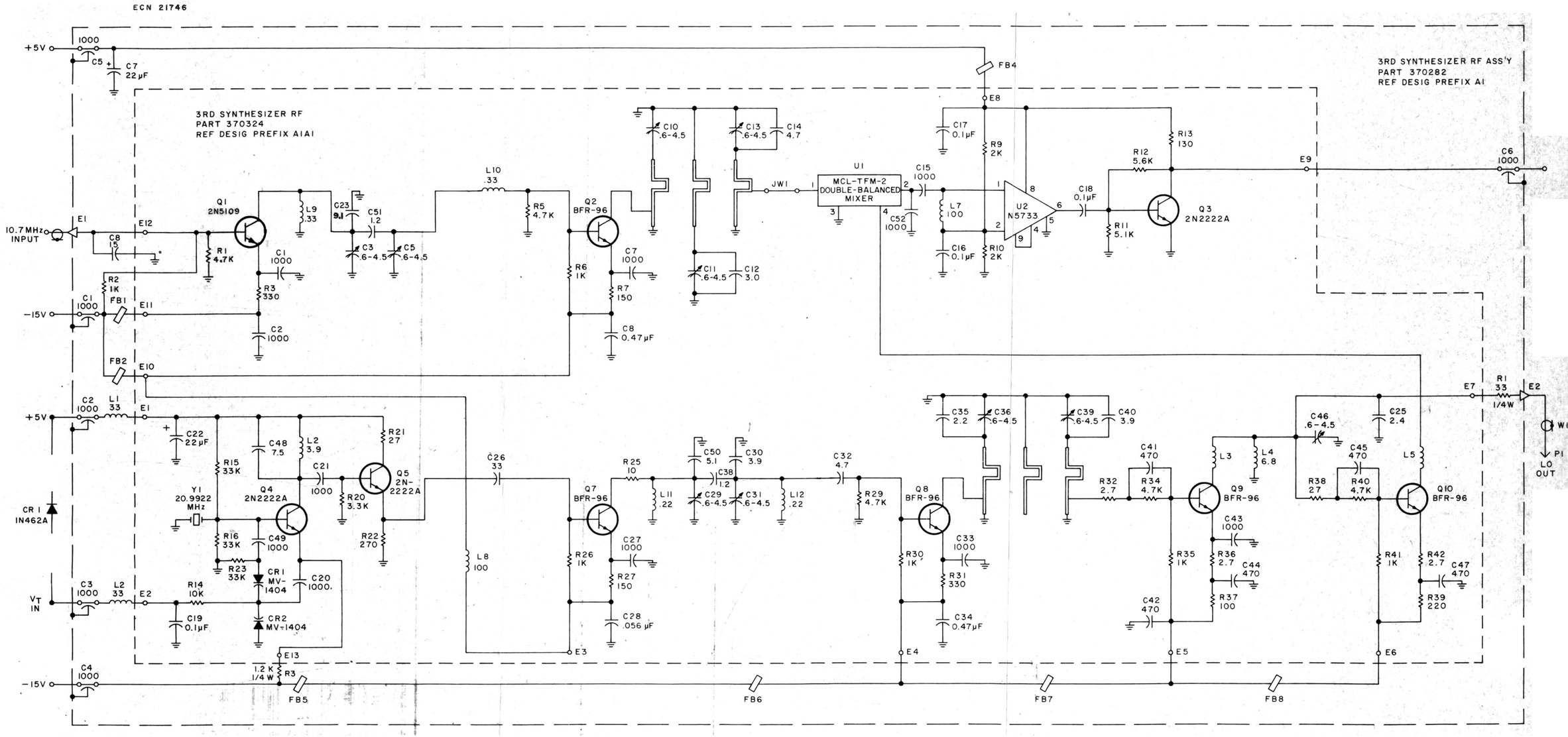

Figure 4-34. Type 774005-1 3rd. L.O. Synthesizer (A4A4) Schematic Diagram 570064 Sheet 2 of 2

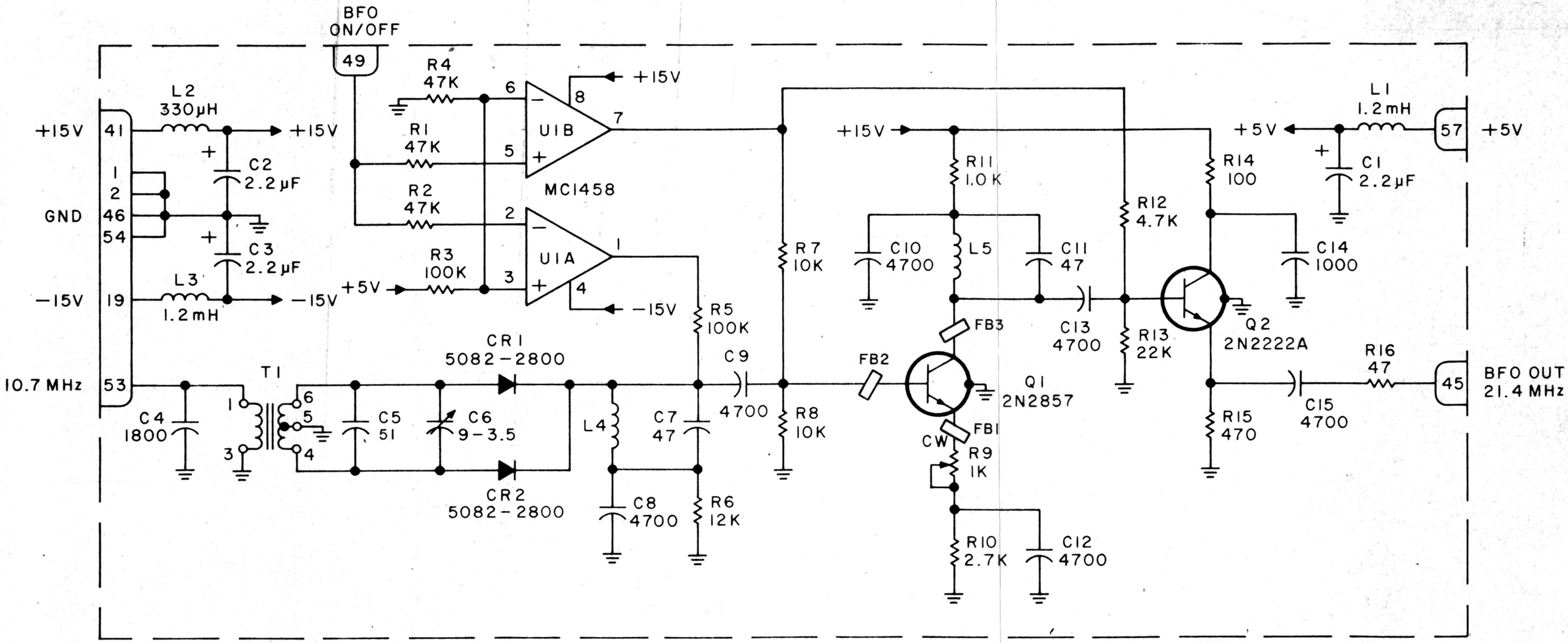

NOTES:

1. UNLESS OTHERWISE SPECIFIED:
   a) RESISTANCE IS IN OHMS, ±5%, 1/4W.
   b) CAPACITANCE IS IN pF.
2. CW INDICATES FULL CLOCKWISE POSITION OF ACTUATOR.

MC1458

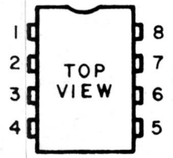

Figure 4-35. Type 794179-1 BFO Assembly (A4A5) Schematic Diagram 370484

NOTES:

1. UNLESS OTHERWISE SPECIFIED,
   CAPACITANCE IS IN μF, RESISTANCE IS IN OHMS ±5%, 1/4W
2. PRINTED CIRCUIT LINES ARE SHOWN ON SCHEM - SEE TABLE B
   FOR WIRE-WRAPPED CONNECTIONS (SHT 2).
3. FOR OPTION USAGE AND LOCATION REFER
   TO TABLE A (SHT 2).

TABLE A

	WJ-8616A						WJ-8617A						WJ-8618A					
	OPTION SLOT						OPTION SLOT						OPTION SLOT					
	1	2	3	4	5	6	1	2	3	4	5	6	1	2	3	4	5	6
861XA/488				OPT						OPT						STD		
861XA/232					OPT						OPT							
861XA/DRD		OPT						OPT						STD				
861XA/BITE			OPT						OPT									
861XA/ASO						OPT						OPT						STD
861XA/EM	OPT						OPT											
861XA/LKOUT	OPT						OPT											
861XA/CURSR	OPT						OPT											
861XA/DFC	OPT						OPT											

TABLE B

SIGNAL NAME	CONN-PIN NO.	CONN-PIN NO.	CONN-PIN NO.
ENB 2	XA3 - A57	OPT SLOT 1-41	
4	- A55	2-41	
6	- A53	3-41	
8	- A51	4-41	
A	- A47	5-41	
ENB C	- A49	6-41	
CLK 5	- A18	2-49	
PLS 4	- A3	4-10	
PLS 5	- A5	5-10	
	- A34	1-4	
BAT	- A6	1-6	
RAMCLK	XA3 - A4	1-10	
OPT 2	XA1 - A11	1-12	
3	- A7	2-47	
4	- A9	3-12	
5	- A3	4-12	
6	- B23	5-12	
OPT 7	- B25	6-12	
EINT 3	- B22	4-47	
EINT 2	XA1 - B27	OPT SLOT 5-47	

(CONTINUED)

SIGNAL NAME	CONN-PIN NO.	CONN-PIN NO.	CONN-PIN NO.
INTEXT	XA1 - B10	OPT SLOT 4-4	OPT SLOT 5-4
INO	XA1 - A41	4-6	OPT SLOT 5-6
HOUT		2-4	OPT SLOT 5-25
VOUT		2-10	OPT SLOT 5-26
ASCAN		6-6	J6B - 4
INTR 3		4-49	OPT SLOT 4-3
INTR 2		OPT SLOT 5-49	OPT SLOT 5-17
	J5B - 2	J5B - 3	
	J5B - 5	J5B - 6	
SWP REV	J6B - 5	XA2 - B21	
GND	J6B - 6	XA2 - A2	
IN 3	XA2 - B53	XA1 - A37	

MODULE	GND CONNECTION ↓
A1-A3	A1, A2, A45, A46
A1-A3	B1, B2, B45, B46

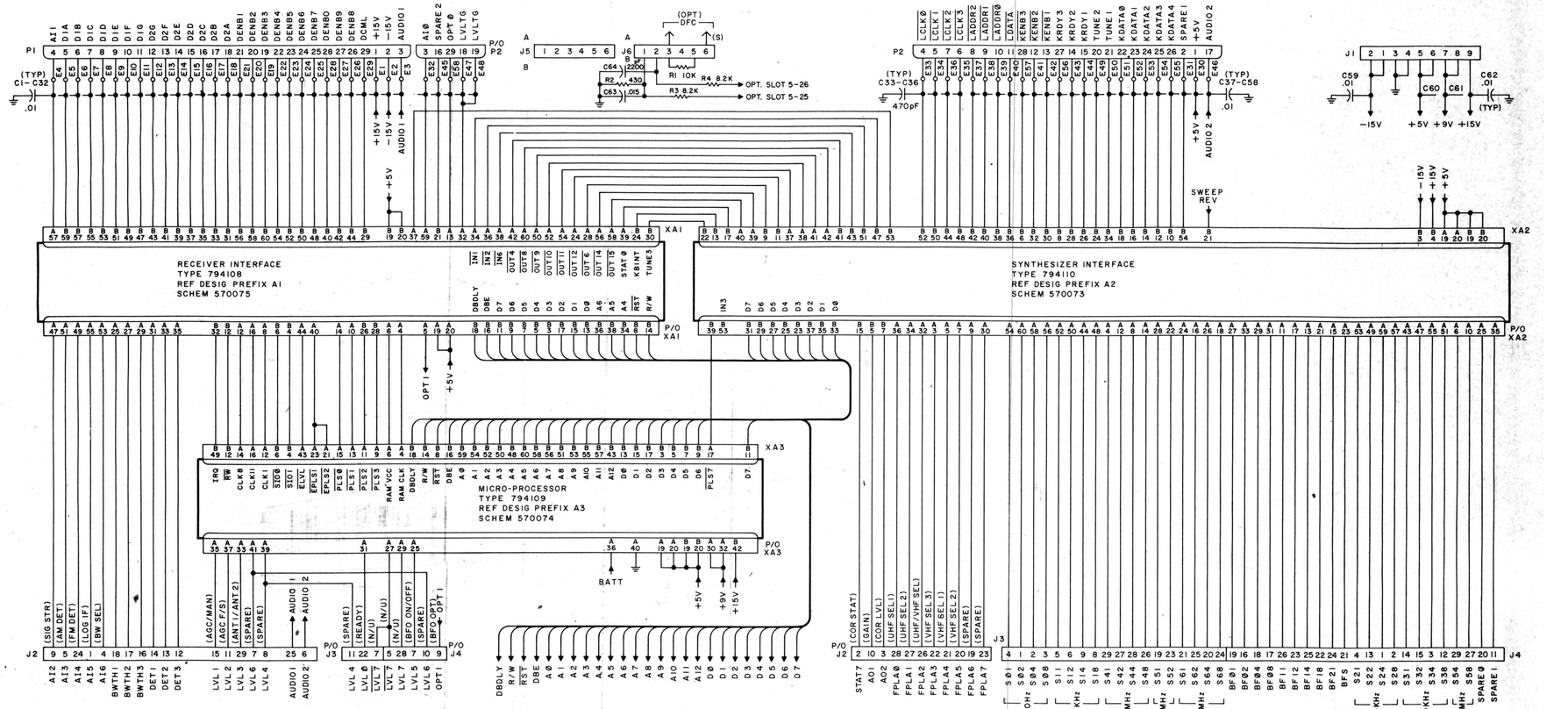

FIGURE 4-36. TYPE 794083 DIGITAL I/O MOTHERBOARD (A5)
SCHEMATIC DIAGRAM 570076
SHEET 1 OF 2

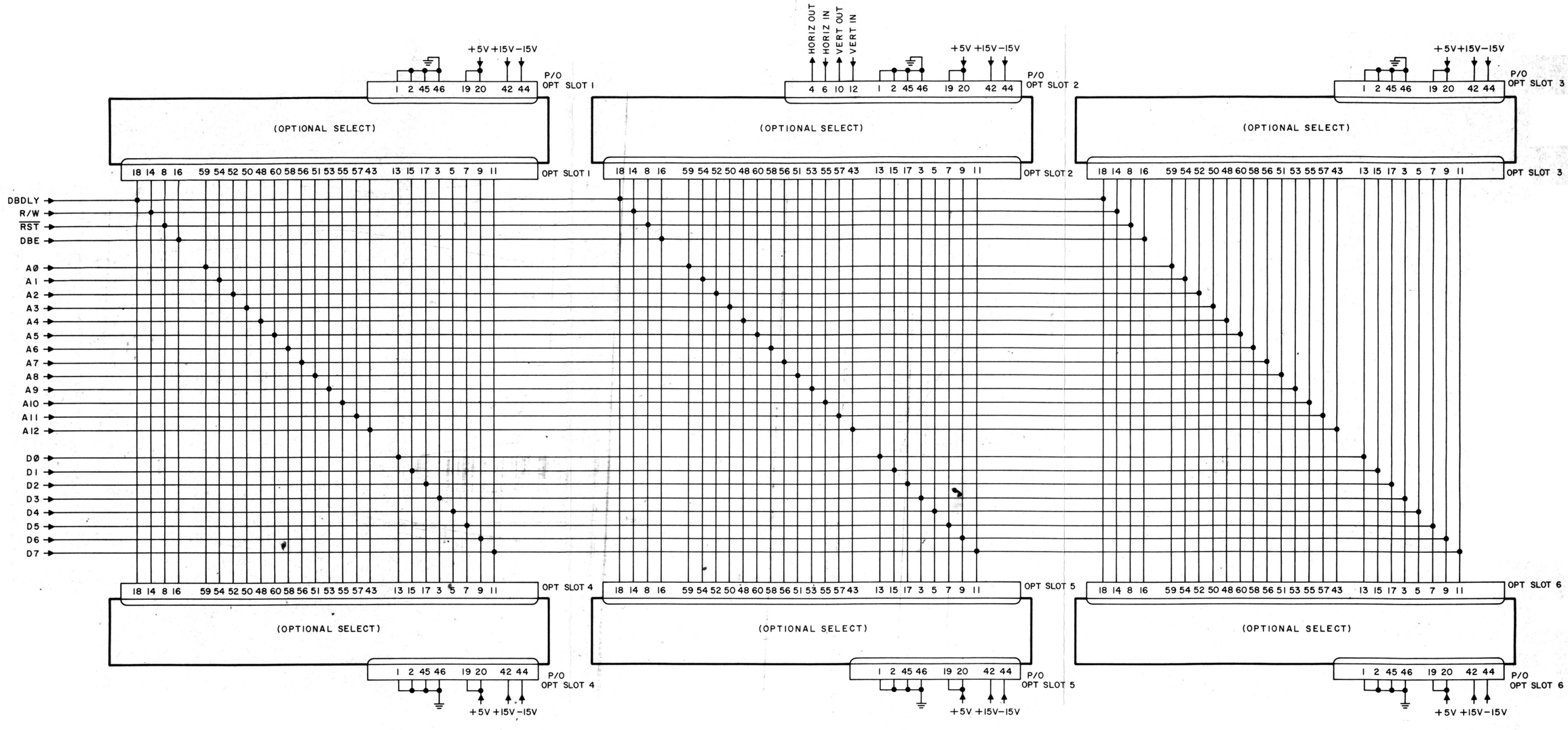

FIGURE 4-37. TYPE 794083 DIGITAL I/O MOTHERBOARD (A5)
SCHEMATIC DIAGRAM 570076
SHEET 2 OF 2

NOTES:
1. UNLESS OTHERWISE SPECIFIED:
   a) RESISTANCE IS IN OHMS, ±5%, 1/4W.
   b) CAPACITANCE IS IN μF.
2. POWER AND GND PINS FOR ICs ARE AS FOLLOWS:
   PIN 16 +5V, PIN 8 GND: U4, U5, U7, U8, U9, U10, U14, U17, U18.
   PIN 14 +5V, PIN 7 GND: U1, U2, U3, U6, U16.
   PIN 20 +5V, PIN 10 GND: U11, U12, U13.
   PIN 11 +5V, PIN 13 GND: U15.
3. NUMBERS IN ( ) ARE HEXIDECIMAL MICROPROCESSOR ADDRESSES.
4. **DIFFERENCE BETWEEN TYPES IS SHOWN IN TABLE A.**

PIN ARRANGEMENT (TYPICAL)



TABLE A

TYPE NO.	R4	R12	R21	C19	C20
794108-1	47	4.32K 1%.1W	56.2K 1% .1W	4.7	.022
794108-2	10	OMIT	OMIT	OMIT	OMIT

Figure 4-38. Type 794108-1 Receiver Interface (A5A1) Schematic Diagram 570075

NOTES:

1. UNLESS OTHERWISE SPECIFIED:
   a) RESISTANCE IS IN OHMS, ±5%, 1/4W.
   b) CAPACITANCE IS IN μF.
2. Vcc AND GND PINS FOR U1, U2, U3, U13, U14 ARE PINS 14 & 7; FOR U4, U16, U17, PINS 16 & 8; FOR U5 THRU U11, U15, U21, AND U22, PINS 20 & 10; FOR U12, PINS 28 & 14.
3. NUMBERS IN ( ) ARE HEXIDECIMAL MICROPROCESSOR ADDRESSES.
4. NOMINAL VALUE, FINAL VALUE FACTORY SELECTED.

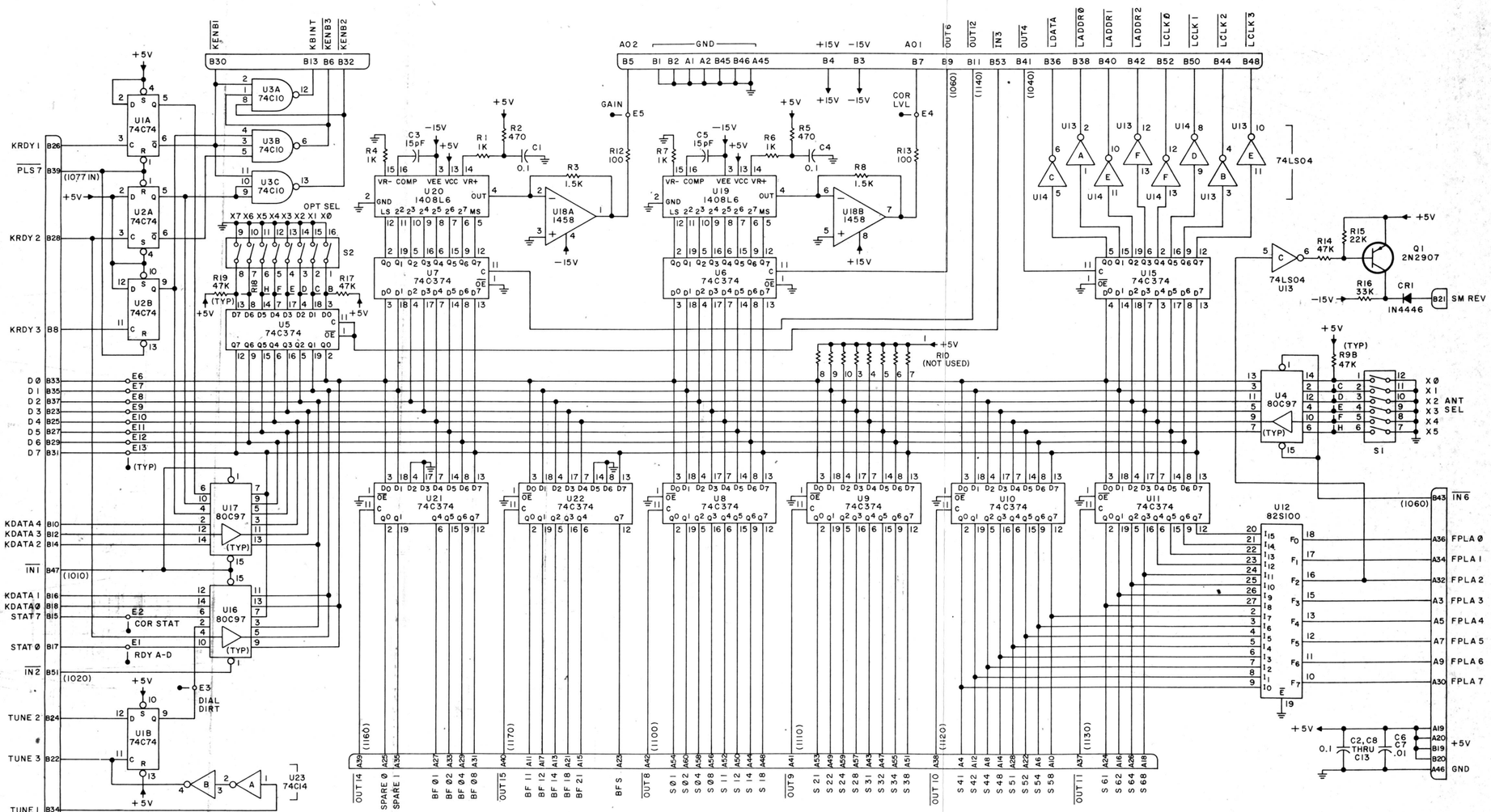

FIGURE 4-39. TYPE 794110-1, SYNTHESIZER INTERFACE (A5A2) SCHEMATIC DIAGRAM 570073

NOTES:
1. UNLESS OTHERWISE SPECIFIED:
   a) RESISTANCE IS IN OHMS, ±5%, 1/4W.
   b) CAPACITANCE IS IN µF.
2. VCC AND GND CONNECTIONS FOR U2 ARE PINS 8 AND 1,21; FOR U16 ARE PINS 14 AND 7; FOR U1, U14, U17, U18, U20, U21 ARE PINS 16 AND 8; FOR U3-U6 PINS 24 AND 12; FOR U19 PINS 20 AND 10; U7-U13, U22 PIN 8 GND; U15 PIN 7 GND.
3. NUMBERS IN ( ) ARE HEXIDECIMAL MICROPROCESSOR ADDRESSES.
4. U3-U6 ARE EPROMS AND CONTAIN THE MICROPROCESSOR PROGRAM. TO FACILITATE CHANGES, SOCKETS ARE INSTALLED. TO FACILITATE MAINTENANCE, SOCKETS ARE INSTALLED FOR MICROPROCESSOR U2 AND CLOCK GENERATOR U1.

ECN 21732

Figure 4-40. Type 794109-1 Microprocessor (A5A3) Schematic Diagram 570074

NOTES:
1. UNLESS OTHERWISE SPECIFIED:
   a) RESISTANCE IS IN OHMS, ±5%, 1/2W.
   b) CAPACITANCE IS IN µF.
2. LED'S DS20 THRU DS49, EXCEPT WHERE NOT USED, ARE REPLACEABLE PART OF S1 THRU S29 AND S31.
3. DIFFERENCE BETWEEN TYPES IS IN COLOR OF DISPLAY LED'S, DS1 THRU DS49. PART NO.S IN TABLE ARE PREFIX WITH 5082-XXXX.

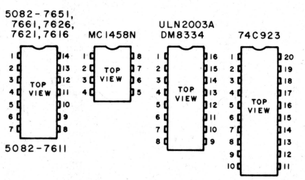



TYPE	COLOR	DS1-8	DS9,10,12-15,17,18	DS11,16	DS19-49
794093-1	RED	7651	7611	7616	4684
794093-2	YELLOW	7661	7621	7626	4584

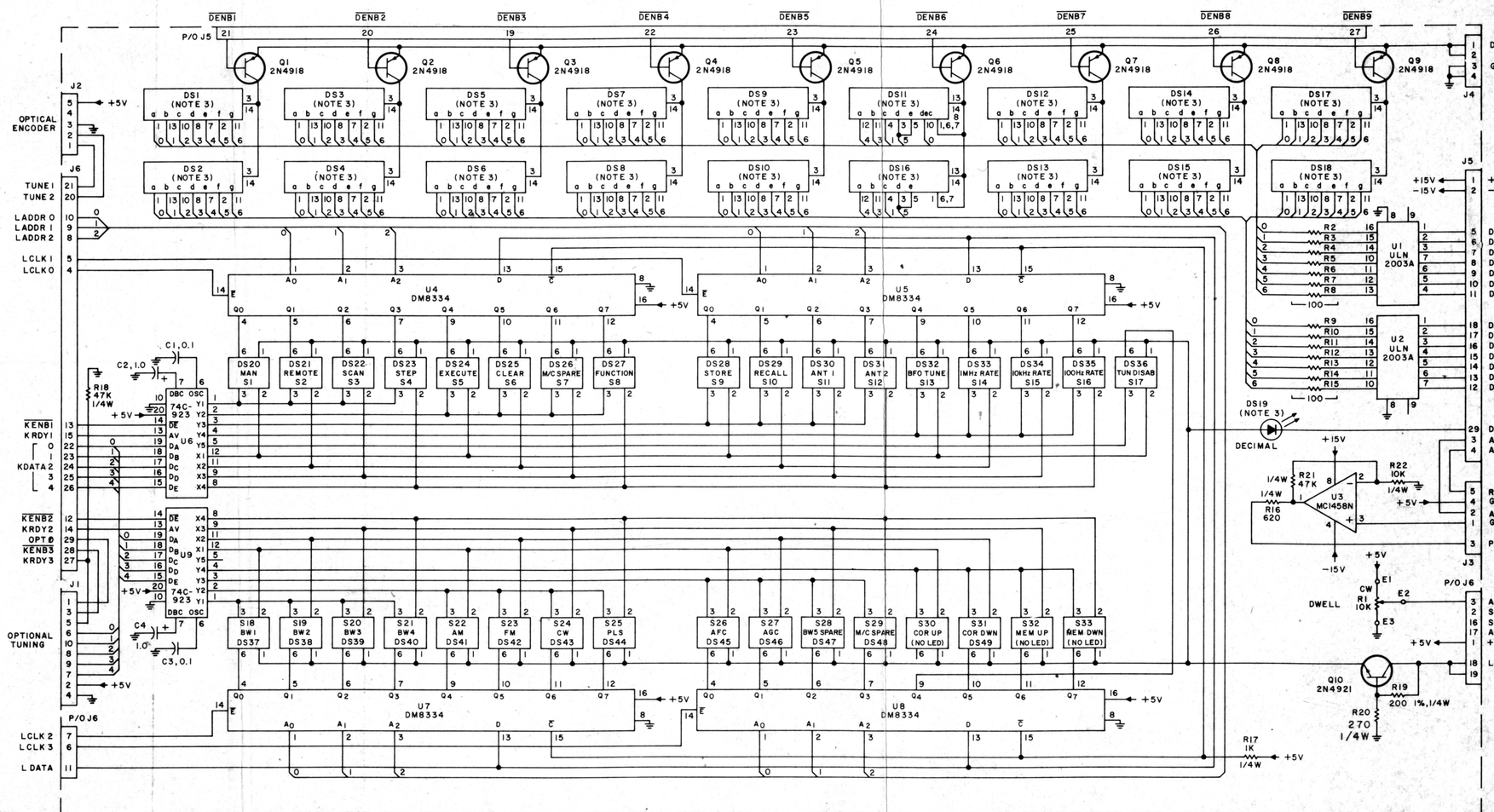

Figure 4-41. Type 794093-1,-2 Front Panel Display & Control (A6) Schematic Diagram 570070

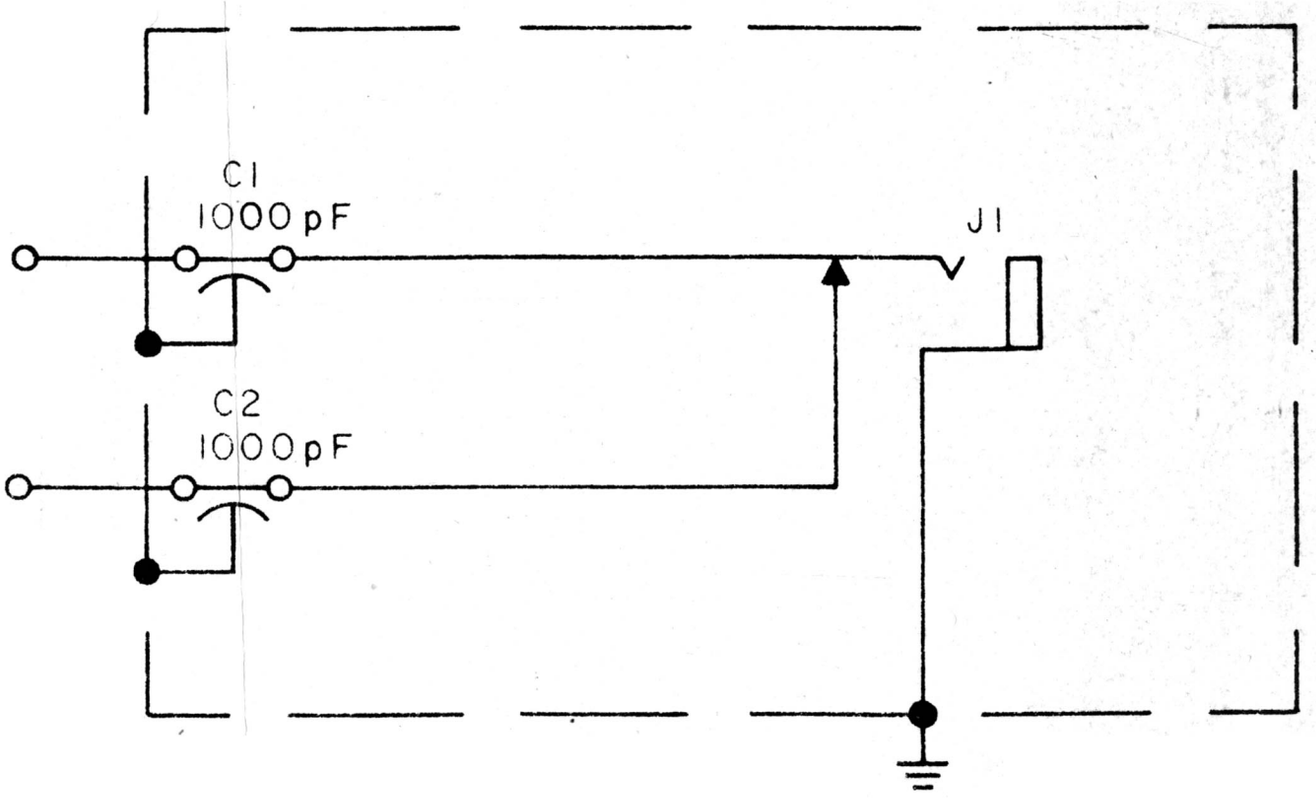

Figure 4-42. Type 791275 Phone Jack Ass'y (A7) Schematic Diagram 23519

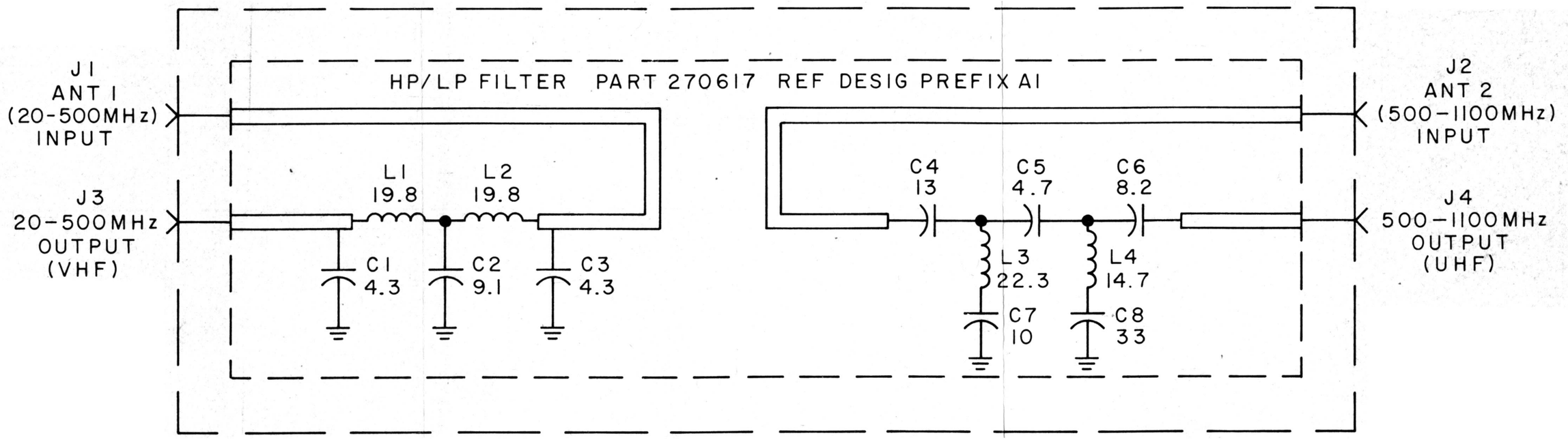

NOTE: CAPACITANCE IS IN pF, INDUCTANCE IS IN nH.

Figure 4-43. Type 794165-1 Antenna Input Filter Assembly (A8) Schematic Diagram 270616

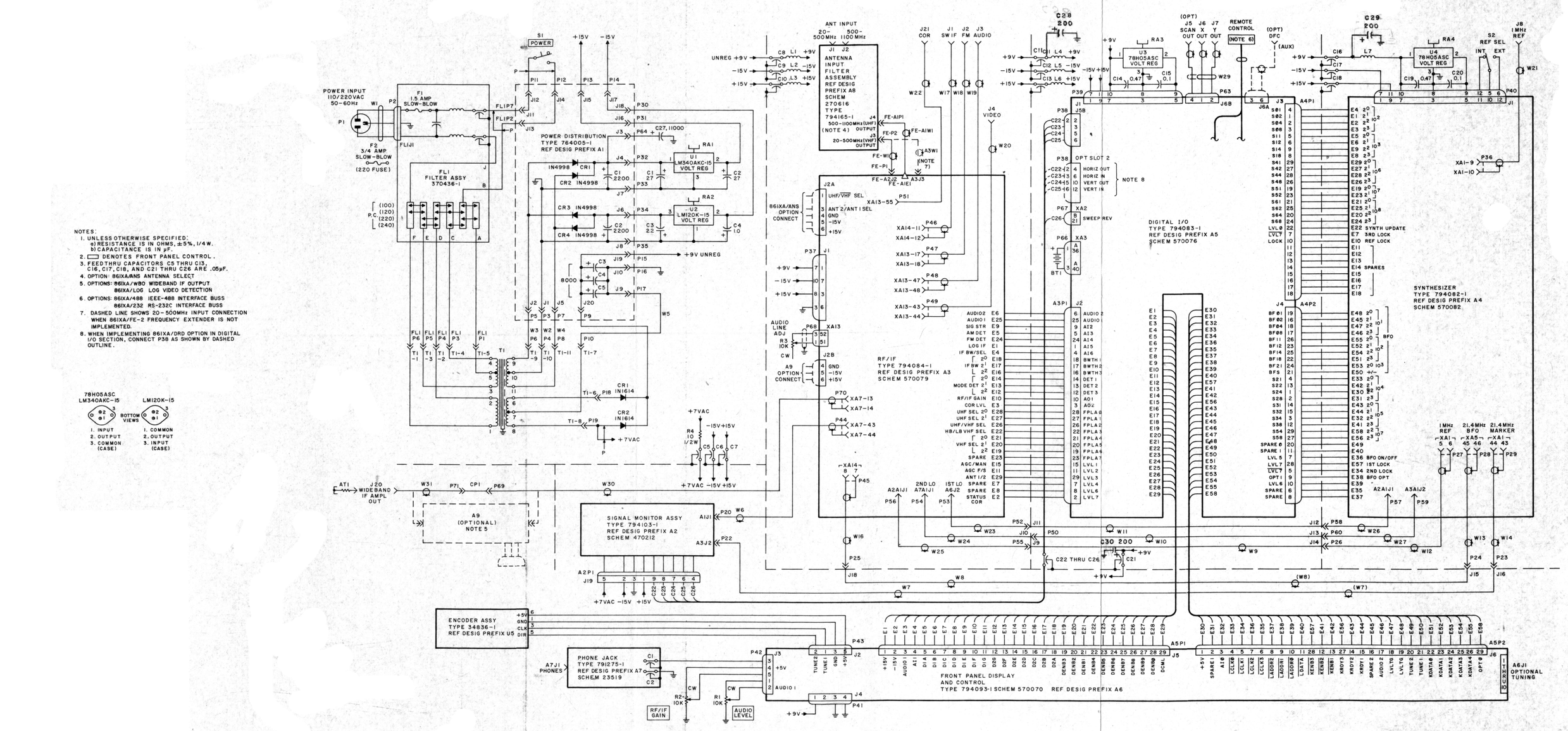

Figure 4-44. Type WJ-8610 Series Main Chassis Schematic Diagram 670040