EE125-AF-OMI-010/E110-R1051H

TECHNICAL MANUAL

OPERATION AND MAINTENANCE INSTRUCTIONS WITH PARTS LIST

ORGANIZATIONAL AND DEPOT

RADIO RECEIVER R-1051H/URR 01A229000-01

STEWART-WARNER ELECTRONICS
(N00039-83-C-0292)



Each transmittal of this document outside of the Department of Defense must have approval of the issuing Service.

Published by direction of Commander, Space and Naval Warfare Systems Command.

DATE: 5 AUGUST 1985

Reproduction for nonmilitary use of the information or illustrations contained in this publication is not permitted. The policy for military use reproduction is established for the Army in AR380-5, for the Navy and Marine Corps in OPNAVINST 55.1B and for the Air Force in Regulation 205-1.

LIST OF EFFECTIVE PAGES

Insert latest changes pages; dispose of superseded pages in accordance with applicable regulations.

NOTE: On a changed page, the portion of the text affected by the latest change is indicated by a vertical line, or other change symbol, in the outer margin of the page. Changes to illustrations are indicated by miniature pointing hands. Changes to wiring diagrams are indicated by shaded areas.

Total number of pages in this manual is 735, consisting of the following:

Page No.	†Change No.
Title	0
A	0
i - xvi	0
Blank	0
1-0	0
1-1 - 1-19	0
1-20 blank	0
2-1	0
2-2 blank	0
2-3	0
2-4 blank	0
2-5 - 2-16	0
3-1	0
3-2	0
3-3	0
3-4	0
3-5	0
3-6 blank	0
3-7	0
3-8 blank	0
3-9 - 3-72	0
4-1 - 4-36	0
5-1 - 5-25	0
5-26 blank	0
5-27 - 5-29	0
5-30 blank	0
5-31 - 5-33	0
5-34 blank	0
5-35	0
5-36 blank	0
5-37	0
5-38 blank	0
5-39 - 5-41	0
5-42 blank	0
5-43 - 5-45	0
5-46 blank	0
5-47 - 5-49	0
5-50 blank	0
5-51	0
5-52 blank	0
5-53 - 5-55	0
5-56 blank	0
5-57 - 5-61	0
5-62 blank	0
5-63 - 5-65	0
5-66 blank	0
5-67	0
5-68 blank	0
5-69	0
5-70 blank	0
5-71	0
5-72 blank	0
5-73 - 5-77	0
5-78 blank	0
5-79	0
5-80 blank	0
5-81	0
5-82 blank	0
5-83 - 5-85	0
5-86 blank	0
5-87	0
5-88 blank	0
5-89	0
5-90 blank	0
5-91	0
5-92 blank	0
5-93	0
5-94 blank	0
5-95	0
5-96 blank	0
5-97	0
5-98 blank	0
5-99	0
5-100 blank	0
5-101	0
5-102 blank	0
5-103	0
5-104 blank	0
5-105	0
5-106 blank	0
5-107	0
5-108 blank	0
5-109	0
5-110 blank	0
5-111	0
5-112 blank	0
5-113	0
5-114 blank	0
5-115	0
5-116	0
5-117	0
5-118	0
5-119	0
5-120 blank	0
5-121	0
5-122 blank	0
5-123 - 5-127	0
5-128 blank	0
5-129	0
5-130 blank	0
5-131	0
5-132 blank	0
5-133	0
5-134 blank	0
5-135	0
5-136 blank	0
5-137 - 5-139	0
5-140 blank	0
5-141 - 5-147	0
5-148 blank	0
5-149 - 5-155	0
5-156 blank	0
5-157 - 5-161	0
5-162 blank	0
5-163	0
5-164 blank	0
5-165 - 5-168	0
5-169	0
5-170 blank	0
5-171 - 5-175	0
5-176 blank	0
5-177 - 5-179	0
5-180 blank	0
5-181	0
5-182 blank	0
5-183	0
5-184 blank	0
5-185	0
5-186 blank	0
5-187 - 5-191	0
5-192 blank	0
5-193 - 5-195	0
5-196	0
5-197	0
5-198 blank	0
5-199	0
5-200 blank	0
5-201 - 5-203	0
5-204 blank	0
5-205	0
5-206 blank	0
6-1 - 6-91	0
6-92 blank	0
7-1 - 7-155	0
7-156 blank	0
7-157 - 7-211	0
7-212 - blank	0
7-213 - 7-237	0
7-238 blank	0
7-239 - 7-243	0
7-244 blank	0
8-1 - 8-9	0
8-10 blank	0
8-11	0
8-12 blank	0
8-13	0
8-14 blank	0
8-15	0
8-16 blank	0
8-17	0
8-18 blank	0
8-19	0
8-20 blank	0
Index 1 - Index 9	0
Index 10 blank	0

† Zero in this column indicates an original page.

RECORD OF CHANGES

CHANGE NO.	DATE	TITLE OR BRIEF DESCRIPTION	ENTERED BY

VALIDATION PERFORMANCE

Title of Publication:

Technical Manual, Operation and
Maintenance Instructions with Parts List
Radio Receiver R-1051H/URR EE125-AD-OMI-010/E510 R1051H

Contractor:

Stewart-Warner Electronics
1300 North Kostner Avenue
Chicago, Illinois 60651

Contract No:

N00039-83-C-0292

Chapter	Section	Paragraph	Date Validation Completed	Check here if not validated
FRONT MATTER			August 1985	
1			July 1985	
2			July 1985	
3			July 1985	
4			July 1985	
5			July 1985	
6			July 1985	
7			July 1985	
8			July 1985	
ALPHABETICAL INDEX			July 1985	

Name & Authority of Validating Officer:

Rodney Knecht, Chief Engineer
Stewart-Warner Electronics

Signature of Validating Officer:



TABLE OF CONTENTS

Chapter		Page
	LIST OF ILLUSTRATIONS	x
	LIST OF TABLES	xv
1	GENERAL INFORMATION AND SAFETY PRECAUTIONS	1-1
	1.1 Safety Precautions	1-1
	1-1. Introduction	1-1
	1-6 Level of Information	1-1
	1-7. Equipment Description	1-1
	1-8. General	1-1
	1-9. Physical Characteristics	1-2
	1-10. Electrical Characteristics	1-2
	1-11. Reference Designations	1-2
	1-12. Reference Data	1-2
	1-14. Equipment Accessories and Documents Supplied	1-2
	1-16. Equipment and Publications Required but Not Supplied	1-2
	1-18. Nonstandard Abbreviations	1-2
	1-20. Factory and Field Changes	1-2
2	OPERATION	2-1
	2-1. Introduction	2-1
	2-3. Operating Controls, Indicators, and Connectors	2-1
	2-5. Operating Procedures	2-1
	2-7. Interference and Emergency Operation	2-1
	2-9. Normal and Emergency Shutdown Procedures	2-1
	2-11. Operator's Maintenance Procedures	2-1
3	FUNCTIONAL DESCRIPTION	3-1
	3-1. Introduction	3-1
	3-3. Overall Functional Description	3-1
	3-4. General	3-1
	3-5. Signal Input	3-1
	3-6. Rf Amplifier	3-1
	3-7. Code Generator Assembly	3-1
	3-8. Frequency Standard	3-1
	3-10. Translator/Synthesizer Assembly	3-5
	3-12. Frequency Generator	3-5
	3-13 Frequency Synthesizer	3-5
	3-17. Mode Selector Assembly	3-9
	3-18. IF/Audio Amplifier Assemblies	3-9
	3-19. Control Assembly	3-9
	3-20. Major Functional Description	3-9
	3-21. General	3-9
	3-22. Rf Amplification, Selection, Tuning, and Overload Protection	3-10
	3-24. Rf Amplification	3-10
	3-27. Tuned Circuits	3-10
	3-28. Rf Amplifier Gain Control	3-11
	3-29. Tuned Circuit Selection	3-11
	3-30. Filtering	3-11

TABLE OF CONTENTS (CONTINUED)

Chapter			Page
3 (Cont.)	3-31.	Rf-to-IF Conversion	3-11
	3-33.	High Frequency Mixer	3-11
	3-38.	Mid Frequency Mixer	3-13
	3-42.	Low Frequency Mixer	3-13
	3-46.	IF Amplification and Control	3-11
	3-48.	Mode Gating	3-13
	3-51.	IF Amplification	3-14
	3-54.	Demodulation	3-14
	3-57.	500 kHz Gating	3-15
	3-58.	Beat Frequency Oscillation	3-15
	3-60.	Automatic Gain Control	3-15
	3-63.	Audio Amplification	3-16
	3-64.	USB, RATT, AM, CW and ISB Modes	3-16
	3-68.	LSB and ISB Modes	3-17
	3-71.	Standard Frequency Generation and Distribution	3-17
	3-72.	Reference Control	3-17
	3-73.	Reference Source Selection	3-17
	3-77.	Oven Temperature Control Sensor	3-18
	3-78.	Frequency Divider	3-18
	3-79.	Frequency Multiplier	3-19
	3-80.	Comparator Circuit	3-19
	3-81.	Frequency Synthesis	3-19
	3-85.	Frequency Generator	3-20
	3-88.	10 kHz/1 kHz/100 Hz Synthesizer	3-21
	3-92.	100 kHz Synthesizer	3-22
	3-96.	10 MHz/1 MHz Synthesizer	3-22
	3-100.	Power Distribution	3-23
	3-102.	+28 V Distribution	3-23
	3-103.	+20 V and +5 V Distribution	3-24
	3-105.	+110 V Distribution	3-24
	3-106.	-30 V Distribution	3-24
	3-108.	Control	3-24
	3-109.	Overall Receiver Tuning Control	3-24
	3-114.	Hz Synthesizer Tuning Control	3-25
	3-118.	Tuning Mechanism	3-27
	3-120.	Circuit Level Descriptions	3-27
	3-121.	General	3-27
	3-122.	Case A1	3-27
	3-123.	Filter Box Assembly A1A1	3-27
	3-124.	Interlock Switch Assembly A1A2	3-27
	3-125.	Chassis Assembly A2 and Panel Assembly A2A14	3-27
	3-128.	Power Control and Distribution	3-50
	3-132.	Rf Input Stage Protection	3-50
	3-133.	20 and 30 MHz Filtering	3-51
	3-135.	Hz Tuning Control	3-51
	3-138.	Mode Selector Assembly A2A1	3-51
	3-139.	Mode Gate Subassembly	3-51
	3-143.	Beat Frequency Oscillator and Amplifier Subassembly	3-52
	3-145.	500 kHz Gate Subassembly A2A1A2	3-52

TABLE OF CONTENTS (CONTINUED)

Chapter			Page
3 (Cont.)	3-146.	IF/Audio Amplifier Assemblies A2A2 and A2A3	3-52
	3-147.	SSB Modes of Operation	3-52
	3-150.	AM Mode of Operation	3-53
	3-152.	CW Mode of Operation	3-53
	3-153.	Automatic Gate Control Circuits	3-54
	3-163.	RF Amplifier Assembly A2A4	3-55
	3-167.	Frequency Standard Assembly A2A5	3-56
	3-168.	Input Circuit Operation (EXT NORMAL Mode)	3-56
	3-174.	Input Circuit Operation (EXT OVEN STBY Mode)	3-57
	3-175.	Input Circuit Operation (INT/COMP Mode)	3-57
	3-176.	Oven Control Circuit Operation	3-58
	3-179.	5 MHz Oscillator Circuit Operation	3-58
	3-181.	Comparator Circuit Operation	3-59
	3-182.	Divide-by-five Oscillator Circuit	3-58
	3-183.	Divide-by-two Oscillator Circuit	3-59
	3-184.	Multiply-by-two Circuit	3-59
	3-185.	5 MHz Output Circuit	3-59
	3-186.	Translator/Synthesizer Assembly A2A6	3-59
	3-190.	Rf Translator	3-60
	3-199.	Frequency Generator	3-61
	3-216.	10 kHz/1 kHz/100 Hz Synthesizer	3-64
	3-238.	100 kHz Synthesizer	3-68
	3-245.	22.9/32.9 MHz Filter Subassembly	3-69
	3-246.	10 MHz/1 MHz Synthesizer Subassembly	3-70
	3-252.	10 MHz/1 MHz Filter Subassembly	3-71
	3-255.	Power Supply Subassembly	3-71
4		SCHEDULED MAINTENANCE	4-1
	4-1.	Introduction	4-1
	4-3.	Scheduled Maintenance Action Index	4-1
	4-5.	Preventive Maintenance Procedures	4-1
	4-6.	Safety Precautions	4-1
	4-8.	Scheduled Performance Tests	4-1
	4-9.	Procedures	4-2
5		TROUBLESHOOTING	5-1
	5-1.	Introduction	5-1
	5-2.	General	5-1
	5-3.	Troubleshooting Data	5-1
	5-4.	Repair Functions	5-1
	5-5.	Alinement and Checkout	5-1
	5-6.	Troubleshooting Index	5-1
	5-8.	Relay and Indicator Lamp Indexes	5-1
	5-10.	Protective Devices Index	5-1
	5-12.	Maintenance Turn-on Procedure	5-1
	5-14.	Troubleshooting Procedures	5-2
	5-16.	Troubleshooting Diagrams	5-2
	5-17.	General	5-2
	5-18.	Signal Flow Diagrams	5-2

TABLE OF CONTENTS (CONTINUED)

Chapter			Page
5 (Cont.)	5-19.	Power Distribution Diagrams	5-23
	5-20.	Control Diagrams	5-23
	5-21.	Fault Logic Diagrams	5-23
	5-22.	Maintenance Schematic Diagrams	5-23
6		CORRECTIVE MAINTENANCE	6-1
	6-1.	Introduction	6-1
		SECTION I - ADJUSTMENTS AND ALINEMENTS	6-1
	6-4.	General	6-1
	6-6.	Electronic Adjustments and Alinements	6-1
	6-7.	Procedures	6-1
	6-8.	Test Equipment Required	6-1
	6-9.	Mechanical Adjustments	6-1
	6-10.	Drive Chain Adjustments	6-1
	6-11.	Coupler Adjustment	6-2
		SECTION II - REPAIR	6-3
	6-12.	General	6-3
	6-14.	Inspection	6-3
	6-15.	Repair Methods	6-3
	6-16.	Wire, Cable, and Connectors	6-3
	6-17.	Printed Wiring Conductors	6-67
	6-18.	Component Replacement	6-68
	6-19.	Cleaning	6-68
	6-20.	Receiver Case A1	6-68
	6-21.	General	6-68
	6-22.	Removal	6-68
	6-23.	Disassembly	6-69
	6-24.	Inspection	6-69
	6-25.	Repair	6-69
	6-26.	Cleaning	6-69
	6-27.	Reassembly and Installation	6-69
	6-28.	Adjustment	6-69
	6-29.	Checkout	6-69
	6-30.	Receiver Chassis Assembly A2 and Hard Wired Assemblies	6-69
	6-31.	General	6-69
	6-32.	Removal	6-69
	6-33.	Disassembly	6-69
	6-34.	Hard Wired/Nonplug-in Assemblies	6-69
	6-35.	Tuning Chain-Drive Mechanism	6-72
	6-36.	Inspection	6-72
	6-37.	Repair	6-72
	6-38.	Cleaning	6-72
	6-39.	Reassembly	6-72
	6-40.	Hard Wired/Nonplug-in Assemblies	6-72
	6-41.	Tuning Chain-Drive Mechanism	6-74
	6-42.	Installation	6-74
	6-43.	Adjustments	6-74
	6-44.	Checkout	6-74

TABLE OF CONTENTS (CONTINUED)

Chapter			Page
6 (Cont.)	6-45.	Mode Selector Assembly A2A1	6-74
	6-46.	General	6-74
	6-47.	Removal	6-74
	6-48.	Disassembly	6-75
	6-49.	Inspection	6-75
	6-50.	Repair	6-75
	6-51.	Cleaning	6-75
	6-52.	Reassembly	6-75
	6-53.	Adjustment	6-75
	6-54.	Installation	6-75
	6-55.	IF/Audio Amplifier Assemblies A2A2 and A2A3	6-75
	6-56.	General	6-75
	6-57.	Removal	6-75
	6-58.	Disassembly	6-75
	6-59.	Inspection	6-76
	6-60.	Repair	6-76
	6-61.	Cleaning	6-76
	6-62.	Reassembly	6-76
	6-63.	Adjustment	6-76
	6-64.	Installation	6-76
	6-65.	RF Amplifier Assembly A2A4	6-76
	6-66.	General	6-76
	6-67.	Vacuum Tube Removal and Replacement	6-76
	6-68.	Removal	6-77
	6-69.	Disassembly	6-77
	6-71.	Inspection	6-81
	6-72.	Repair	6-81
	6-73.	Cleaning	6-81
	6-74.	Reassembly	6-81
	6-75.	Adjustment	6-84
	6-76.	Installation	6-84
	6-77.	Frequency Standard Assembly A2A5	6-84
	6-78.	General	6-84
	6-79.	Removal	6-84
	6-80.	Disassembly	6-84
	6-81.	Inspection	6-85
	6-82.	Repair	6-85
	6-83.	Cleaning	6-85
	6-84.	Reassembly	6-85
	6-85.	Adjustment	6-85
	6-86.	Installation	6-85
	6-87.	Translator/Synthesizer Assembly A2A6	6-86
	6-88.	General	6-86
	6-89.	Removal	6-86
	6-90.	Disassembly	6-86
	6-91.	Translator Subassembly A2A6A8	6-86
	6-92.	Rotary Switches	6-86
	6-93.	Main Connectors	6-87
	6-94.	Printed Circuit Board Connectors	6-87

TABLE OF CONTENTS (CONTINUED)

Chapter			Page
6 (Cont.)	6-95.	Inspection	6-87
	6-96.	Repair	6-87
	6-97.	Cleaning	6-87
	6-98.	Reassembly	6-87
	6-99.	Adjustment	6-87
	6-100.	Installation	6-87
	6-101.	Code Generator Assembly A2A7	6-89
	6-102.	General	6-89
	6-103.	Removal	6-89
	6-104.	Inspection	6-89
	6-105.	Cleaning	6-89
	6-106.	Installation and Alinement	6-89
	6-107.	Antenna Overload Assembly A2A9	6-90
	6-108.	General	6-90
	6-109.	20 MHz and 30 MHz Filter Assembly A2A10	6-90
	6-110.	General	6-90
	6-111.	Control Assembly A2A13	6-90
	6-112.	General	6-90
	6-113.	Adjustment	6-90
	6-114.	Hz Control and Vernier Subassembly A2A14A11	6-90
	6-115.	General	6-90
	6-116.	Meter Driver Subassembly A2A14A12	6-90
	6-117.	General	6-90
	6-118.	Mounting Base Assembly MT-3114A/UR	6-90
	6-119.	General	6-90
	6-120.	Removal	6-90
	6-121.	Disassembly	6-90
	6-122.	Reassembly	6-91
7	PARTS LIST		7-1
	7-1.	Introduction	7-1
	7-2.	List of Assemblies	7-1
	7-3.	Reference Designations	7-1
	7-5.	Maintenance Parts Listing	7-1
	7-6.	Parts List	7-1
	7-7.	List of Common Item Descriptions	7-2
	7-8.	List of Attaching Hardware	7-2
	7-9.	List of Manufacturers	7-2
	7-10.	Parts Location Illustrations	7-2
8	INSTALLATION		8-1
	8-1.	General	8-1
	8-3.	Site Selection	8-1
	8-5.	Reference Publications	8-1
	8-7.	Tools and Materials Required for Installation	8-1
	8-9.	Unpacking and Repacking	8-1
	8-11.	Installation Procedures	8-1
	8-13.	Independent Shock Mounting	8-1
	8-14.	Rack Mounting	8-1

TABLE OF CONTENTS (CONTINUED)

Chapter			Page
8 (Cont.)	8-15.	Bonding and Grounding	8-2
	8-17.	Primary Power Requirements	8-2
	8-19.	Power Supply Adaptation	8-2
	8-20.	Transformers in Balanced, Grounded, Center-Tap Circuit	8-2
	8-21.	Interconnecting Cabling	8-3
	8-23.	Interconnections	8-3
	8-24.	Operation As a Remote Unit	8-3
	8-25.	Operation As an Independent Unit	8-3
	8-26.	Operation Using Internal Frequency Standard	8-3
	8-27.	Operation Using External Frequency Standard	8-3
	8-28.	Use of Frequency Standard Output by Another Unit	8-5
	8-29.	Use of External Frequency Standard for Calibration	8-5
	8-30.	Installation Checkout	8-6
	8-32.	Phase 1 - Installation Inspection and Pre-Energizing Procedures	8-6
	8-33.	Phase 2 - Initial Turn-On and Preliminary Test	8-6
	8-34.	Phase 3 - Installation Verification Test	8-6
	ALPHABETICAL INDEX		Index 1

LIST OF ILLUSTRATIONS

Figure	Title	Page
1-1.	Radio Receiver R-1051H/URR	1-0
1-2.	Radio Receiver R-1051H/URR, Top View, Case Removed	1-3
1-3.	Radio Receiver R-1051H/URR, Bottom View, Case Removed	1-4
2-1.	Radio Receiver R-1051H/URR, Operating Controls, Indicators and Connectors	2-3
3-1.	Radio Receiver R-1051H/URR, Overall Functional Block Diagram	3-3
3-2.	Frequency Synthesis and Translation, Functional Block Diagram	3-7
3-3.	Integrated Circuit - - Dual Differential Amplifier	3-28
3-4.	Integrated Circuit - - Quad Operational Amplifier	3-29
3-5.	Integrated Circuit - - TTL Quad NAND Gate	3-30
3-6.	Integrated Circuit - - 3-Terminal Positive Voltage Regulators	3-31
3-7.	Integrated Circuit - - TTL Hex Single - Input Inverter Gates	3-32
3-8.	Integrated Circuit - - Schottky TTL Dual Decade Counter	3-33
3-9.	Integrated Circuit - - Schottky TTL Bi-directional Binary Coded Decimal Counter	3-34
3-10.	Integrated Circuit - - Dual D-Type Flip-Flop	3-35
3-11.	Integrated Circuit - - PMOS Operational Amplifier	3-36
3-12.	Integrated Circuit - - Dual Voltage-Controlled Multivibrator	3-37
3-13.	Integrated Circuit - - Voltage-Controlled Oscillator	3-38
3-14.	Integrated Circuit - - Schottky TTL Dual 4-Bit Binary Counter	3-39
3-15.	Integrated Circuit - - Phase-Frequency Detector	3-40
3-16.	Integrated Circuit - - Schottky TTL Bipolar Digital Hex Inverter	3-41
3-17.	Integrated Circuit - - Schottky TTL Synchronous Up-Down Binary Coded Binary Counter	3-42
3-18.	Integrated Circuit - - Two-Modulus Prescaler	3-43
3-19.	Integrated Circuit - - PROM - 32 Words of 8-Bits/Word	3-44
3-20.	Integrated Circuit - - Schottky Quad 2-input NOR Gates	3-45
3-21.	Integrated Circuit - - PROM - 32 Words of 8-Bits/Word	3-46
3-22.	Integrated Circuit - - Positive Adjustable Voltage Regulator	3-47
3-23.	Integrated Circuit - - Low Current, Wide Voltage Range Voltage Comparator	3-48
3-24.	Integrated Circuit - - Positive Voltage Regulator	3-49
4-1.	Chassis Assembly Connector Pin Location Diagram (Top View)	4-4
4-2.	Fabrication of 600 Ohm Impedance Adapter	4-4
4-3.	Translator/Synthesizer A2A6, Test Setup	4-30
5-1.	RF Amplification, Selection, Tuning and Overload Protection, Signal Flow Diagram	5-25
5-2.	A2A6 Translator/Synthesizer, RF-to-IF Conversion, Signal Flow Diagram	5-29
5-3.	IF Amplification and Control, Signal Flow Diagram	5-35
5-4.	500 kHz Gating, Signal Flow Diagram	5-37
5-5.	Audio Amplification (USB, RATT, AM, CW and ISB Modes), Signal Flow Diagram	5-41
5-6.	Audio Amplification (LSB Mode), Signal Flow Diagram	5-45
5-7.	Manual/Automatic Gain Control, Signal Flow Diagram	5-49
5-8.	Beat Frequency Oscillator, Signal Flow Diagram	5-51
5-9.	Standard Frequency Generation and Distribution, Signal Flow Diagram	5-55

LIST OF ILLUSTRATIONS (CONTINUED)

Figure	Title	Page
5-10.	10 MHz/1 MHz Synthesizer A2A6A13 and Filter Subassembly A2A6A14, Signal Flow Diagram	5-61
5-11.	Frequency Generator A2A6A16, Signal Flow Diagram	5-67
5-12.	100 kHz Synthesizer A2A6A17, Signal Flow Diagram	5-71
5-13.	10 kHz/1 kHz/100 Hz Synthesizer A2A6A19/A2A6A20, Signal Flow Diagram	5-77
5-14.	Ac Power Distribution Diagram	5-79
5-15.	+28 V Power Distribution Diagram	5-81
5-16.	+20 V and +5 V Power Distribution Diagram	5-85
5-17.	+110 V Power Distribution Diagram	5-87
5-18.	-30 V Power Distribution Diagram	5-89
5-19.	Tuning Control Diagram	5-91
5-20.	Rf Amplification, Selection, Tuning and Overload Protection,Fault Logic Diagram	5-93
5-21.	RF-to-IF Conversion, Fault Logic Diagram	5-95
5-22.	IF Amplification and Control, Fault Logic Diagram	5-97
5-23.	Audio Amplification (USB, RATT, AM, CW and ISB Modes), Fault Logic Diagram	5-99
5-24.	Audio Amplification (LSB Mode), Fault Logic Diagram	5-101
5-25.	Automatic Gain Control, Fault Logic Diagram	5-103
5-26.	Beat Frequency Oscillator, Fault Logic Diagram	5-105
5-27.	Standard Frequency Generation and Distribution, Fault Logic Diagram	5-107
5-28.	10 MHz/1 MHz Synthesizer Synthesizer A2A6A13 and A2A6A14, Fault Logic Diagram	5-111
5-29.	Frequency Generator A2A6A16, Fault Logic Diagram	5-115
5-30.	100 kHz Synthesizer A2A6A17, Fault Logic Diagram	5-117
5-31.	10 kHz/1 kHz/100 Hz Synthesizer Subassemblies (No. 1) A2A6A20 and (No. 2) A2A6A19, Fault Logic Diagram	5-121
5-32.	Receiver Case A1 and Chassis/Panel Assembly A2/A2A14, Maintenance Schematic Diagram	5-129
5-33.	Receiver Mode Selector Assembly A2A1, Maintenance Schematic Diagram	5-139
5-34.	Receiver IF/Audio Amplifier Assemblies A2A2 and A2A3, Maintenance Schematic Diagram	5-147
5-35.	RF Amplifier Assembly A2A4, Maintenance Schematic Diagram	5-155
5-36.	Frequency Standard Assembly A2A5, Maintenance Schematic Diagram	5-163
5-37.	Translator/Synthesizer Assembly A2A6, Maintenance Schematic Diagram	5-169
5-38.	RF Translator Subassembly A2A6A8, Maintenance Schematic Diagram	5-175
5-39.	10 MHz/1 MHz Synthesizer Subassembly A2A6A13, Maintenance Schematic Diagram	5-179
5-40.	10 MHz/1 MHz Filter Subassembly A2A6A14, Maintenance Schematic Diagram	5-183
5-41.	Power Supply Subassembly A2A6A15, Maintenance Schematic Diagram	5-185
5-42.	Frequency Generator Subassembly A2A6A16, Maintenance Schematic Diagram	5-191

LIST OF ILLUSTRATIONS (CONTINUED)

Figure	Title	Page
5-43.	100 kHz Synthesizer Subassembly A2A6A17, Maintenance Schematic Diagram	5-195
5-44.	10 kHz/ 1 kHz/100 Hz Synthesizer Subassembly (No. 2) A2A6A19, Maintenance Schematic Diagram	5-199
5-45.	10 kHz/1 kHz/100 Hz Synthesizer Subassembly (No. 1) A2A6A20, Maintenance Schematic Diagram	5-203
5-46.	Code Generator Assembly A2A7, Maintenance Schematic Diagram	5-207
6-1.	Radio Receiver R-1051H/URR, Overall Adjustment and Alinement Bench Test Setup	6-5
6-2.	Mode Selector Assembly A2A1, Adjustment and Alinement Bench Test Setup	6-21
6-3.	IF/Audio Amplifier Assemblies A2A2/A2A3, Adjustment and Alinement Bench Test Setup	6-23
6-4.	RF Amplifier Assembly A2A4, Adjustment and Alinement Bench Test Setup	6-27
6-5.	Frequency Standard Assembly A2A5, Adjustment and Alinement Bench Test Setup	6-35
6-6.	Translator/Synthesizer Assembly A2A6, Adjustment and Alinement Bench Test Setup	6-41
6-7.	RF Amplifier Assembly A2A4, Disassembly Parts Identification	6-78
6-8.	RF Amplfier Assembly A2A4, Bottom View, Disassembly Screw Locations	6-78
6-9.	RF Amplifier Assembly A2A4, RF Chassis and Turret Assembly, Disassembly Parts Location	6-79
6-10.	Switch and Coupling Orientation	6-88
7-1.	Case Assembly 1A1, Component Locations	7-152
7-2.	Filter Box Assembly A1A1, Component Locations	7-153
7-3.	Interlock Switch Assembly A1A2, Component Locations	7-154
7-4.	Receiver Chassis Assembly A2, Component Locations	7-155
7-5.	Triple Sprocket Assembly A2MP14, Component Locations	7-157
7-6.	Dual-Sprocket Assembly A2MP15, Component Locations	7-158
7-7.	Receiver Mode Selector Assembly A2A1, Component Locations	7-159
7-8.	Mode Gate Subassembly A2A1A1, Component Locations	7-161
7-9.	500 kHz Gate Subassembly A2A1A2, Component Locations	7-162
7-10.	Beat Frequency Oscillator and Amplifier Subassembly A2A1A3, Component Locations	7-163
7-11.	Receiver IF/Audio Amplifier Assemblies A2A2 and A2A3, Component Locations	7-164
7-12.	AGC Audio Amplifier Subassemblies A2A2A1 and A2A3A1, Component Locations	7-166
7-13.	IF/Audio Amplifier Subassemblies A2A2A2 and A2A3A2, Component Locations	7-168
7-14.	SSB/AM Detector Subassemblies A2A2A3 and A2A3A3, Component Locations	7-169
7-15.	RF Amplifier Assembly A2A4, Component Locations	7-170
7-16.	Mounting Base Assembly (A2A4MP40) Component Locations	7-171
7-17.	Top Coupling Assembly A2A4MP62 and A2A4MP63, Component Locations	7-172
7-18.	RF Chassis Assembly (P/O A2A4), Component Locations	7-173

LIST OF ILLUSTRATIONS (CONTINUED)

Figure	Title	Page
7-19.	Turret Drive Gear Assembly (P/O A2A4), Component Locations	7-174
7-20.	RF Amplifier Subassembly A2A4A1, Component Locations	7-175
7-21.	Tuning Rotor Assembly A2A4MP47, Component Locations	7-176
7-22.	12 MHz Subassembly A2A4A2, Component Locations	7-177
7-23.	13 MHz Subassembly A2A4A3, Component Locations	7-177
7-24.	14 MHz Subassembly A2A4A4, Component Locations	7-178
7-25.	15 MHz Subassembly A2A4A5, Component Locations	7-178
7-26.	16 MHz Subassembly A2A4A6, Component Locations	7-179
7-27.	17 MHz Subassembly A2A4A7, Component Locations	7-179
7-28.	18 MHz Subassembly A2A4A8, Component Locations	7-180
7-29.	19 MHz Subassembly A2A4A9, Component Locations	7-180
7-30.	20 MHz Subassembly A2A4A10, Component Locations	7-181
7-31.	21 MHz Subassembly A2A4A11, Component Locations	7-181
7-32.	22 MHz Subassembly A2A4A12, Component Locations	7-182
7-33.	23 MHz Subassembly A2A4A13, Component Locations	7-182
7-34.	24 MHz Subassembly A2A4A14, Component Locations	7-183
7-35.	25 MHz Subassembly A2A4A15, Component Locations	7-183
7-36.	26 MHz Subassembly A2A4A16, Component Locations	7-184
7-37.	27 MHz Subassembly A2A4A17, Component Locations	7-184
7-38.	28 MHz Subassembly A2A4A18, Component Locations	7-185
7-39.	29 MHz Subassembly A2A4A19, Component Locations	7-185
7-40.	2 MHz Subassembly A2A4A20, Component Locations	7-186
7-41.	3 MHz Subassembly A2A4A21, Component Locations	7-186
7-42.	4 MHz Subassembly A2A4A22, Component Locations	7-187
7-43.	5 MHz Subassembly A2A4A23, Component Locations	7-187
7-44.	6 MHz Subassembly A2A4A24, Component Locations	7-188
7-45.	7 MHz Subassembly A2A4A25, Component Locations	7-188
7-46.	8 MHz Subassembly A2A4A26, Component Locations	7-189
7-47.	9 MHz Subassembly A2A4A27, Component Locations	7-189
7-48.	10 MHz Subassembly A2A4A28, Component Locations	7-190
7-49.	11 MHz Subassembly A2A4A29, Component Locations	7-190
7-50.	100 kHz Rotor Subassembly A2A4A30, Component Locations	7-191
7-51.	10 kHz Rotor Subassembly A2A4A31, Component Locations	7-192
7-52.	10 kHz Rotor Subassembly A2A4A32, Component Locations	7-193
7-53.	100 kHz Rotor Subassembly A2A4A33, Component Locations	7-194
7-54.	100 kHz Rotor Subassembly A2A4A34, Component Locations	7-195
7-55.	100 kHz Rotor Subassembly A2A4A35, Component Locations	7-196
7-56.	10 kHz Rotor Subassembly A2A4A36, Component Locations	7-197
7-57.	100 kHz Rotor Subassembly A2A4A37, Component Locations	7-198
7-58.	RF Mixer Amplifier Subassembly A2A4A38, Component Locations	7-200
7-59.	Frequency Standard Assembly A2A5, Component Locations	7-201
7-60.	Frequency Standard Assembly A2A5, Housing Removed, Top View, Component Locations	7-201
7-61.	Oscillator and Oven Control Subassembly A2A5A1, Component Locations	7-203
7-62.	Divider/Amplifier Subassembly A2A5A2, Component Locations	7-206
7-63.	Oven Body Subassembly A2A5A3, Component Locations	7-207
7-64.	5 MHz Reference Control Subassembly A2A5A4, Component Locations	7-209

LIST OF ILLUSTRATIONS (CONTINUED)

Figure	Title	Page
7-65.	Translator/Synthesizer Assembly A2A6, Component Locations	7-211
7-66.	Filter Assembly A2A6A7, Component Locations	7-213
7-67.	RF Translator Subassembly A2A6A8, Component Locations	7-216
7-68.	Circuit Card Assembly 10 MHz/1 MHz A2A6A13, Component Locations	7-218
7-69.	10 MHz/1 MHz Filter Subassembly A2A6A14, Component Locations	7-220
7-70.	Power Supply Subassembly A2A6A15, Component Locations	7-222
7-71.	Frequency Generator Subassembly A2A6A16, Component Locations	7-224
7-72.	100 kHz/10 kHz Synthesizer Subassembly A2A6A17, Component Locations	7-226
7-73.	1 kHz/100 Hz Synthesizer Subassembly (No. 2) A2A6A19, Component Locations	7-228
7-74.	1 kHz/ 100 Hz Synthesizer Subassembly (No. 1) A2A6A20, Component Locations	7-230
7-75.	Code Generator Assembly A2A7, Component Locations	7-231
7-76.	Antenna Overload Assembly A2A9, Component Locations	7-233
7-77.	20 and 30 MHz Filter Assembly A2A10, Component Locations	7-234
7-78.	Control Assembly A2A13, Component Locations	7-236
7-79.	Front Panel Assembly A2A14, Component Locations	7-237
7-80.	Hz Control and Vernier Assembly A2A14A11, Component Locations	7-239
7-81.	4 Volt Power Supply Subassembly A2A14A11A1, Component Locations	7-240
7-82.	Meter Driver Subassembly A2A14A12, Component Locations	7-241
7-83.	Mating Connector Kit	7-242
7-84.	Shock and Vibration Mount Assembly, Component Locations	7-243
8-1.	Radio Receiver R-1051H/URR, Cable System Diagram	8-9
8-2.	Radio Receiver R-1051H/URR, Outline and Mounting Dimensions	8-11
8-3.	Radio Receiver R-1051H/URR, Summary List of Installation Materials	8-15
8-4.	Radio Receiver R-1051H/URR, Cable Running Sheets	8-19

LIST OF TABLES

Table	Title	Page
1-1.	Radio Receiver R-1051H/URR, Assemblies and Reference Designations	1-5
1-2.	Radio Receiver R-1051H/URR, Functional Characteristics	1-7
1-3.	Radio Receiver R-1051H/URR, Crystal Complement	1-8
1-4.	Radio Receiver R-1051H/URR, Equipment, Accessories and Documents Supplied	1-9
1-5.	Radio Receiver R-1051H/URR, Equipment and Publications Required but Not Supplied	1-11
1-6.	Nonstandard Abbreviations	1-17
1-7.	Radio Receiver R-1051H/URR, Factory Changes	1-18
1-8.	Radio Receiver R-1051H/URR, Field Changes	1-19
2-1.	Operating Controls, Indicators and Connectors	2-5
2-2.	Operating Procedures	2-10
2-3.	Operating Procedures for Interference Conditions	2-14
2-4.	Normal and Emergency Shutdown Procedures	2-15
2-5.	Operator's Maintenance Procedures	2-16
3-1.	Comprehensive Frequency Translation Chart	3-12
3-2.	Tuning Code Chart	3-26
3-3.	Preset Counter Logic Codes (BCD)	3-51
4-1.	Scheduled Maintenance Action Index	4-3
4-2.	Preventive Maintenance Procedures	4-5
4-3.	Overall Receiver Check	4-7
4-4.	Frequency Standard Tests	4-9
4-5.	Safety Interlock and Regulated Supply Tests	4-11
4-6.	Overall Receiver Sensitivity	4-12
4-7.	Receiver Tuning	4-16
4-8.	Mechanical Synchronization Check	4-18
4-9.	Audio Level Meter Calibration	4-20
4-10.	Control Assembly Check	4-22
4-11.	AGC Performance and I.F. Gain	4-24
4-12.	RF Amplifier Assembly Check	4-26
4-13.	Translator/Synthesizer Check	4-28
4-14.	Mode Selector Assembly Check	4-31
4-15.	IF/Audio Amplifier Assemblies Check	4-33
4-16.	Frequency Standard Tests	4-35
5-1.	Radio Receiver R-1051H/URR, Troubleshooting Index	5-3
5-2.	Relay Index	5-4
5-3.	Indicator Lamp Index	5-5
5-4.	Protective Devices Index	5-5
5-5.	Radio Receiver R-1051H/URR, Maintenance Turn-on Procedure	5-6
6-1.	Radio Receiver R-1051H/URR, Overall Adjustment and Alinement Procedures	6-4
6-2.	Mode Selector Assembly A2A1, Adjustment and Alinement Procedures	6-19
6-3.	IF/Audio Amplifier Assemblies A2A2/A2A3, Adjustment and Alinement Procedures	6-22
6-4.	RF Amplifier Assembly A2A4, Adjustment and Alinement Procedures	6-26
6-5.	Frequency Standard Assembly A2A5, Adjustment and Alinement Procedures	6-34

LIST OF TABLES (CONTINUED)

Table	Title	Page
6-6.	Translator/Synthesizer Assembly A2A6, Adjustment and Alinement Procedures	6-40
6-7.	Receiver Control Assembly A2A13, Adjustment Procedures	6-63
6-8.	Inspection Requirements for Radio Receiver R-1051H/URR	6-65
7-1.	Radio Receiver R-1051H/URR, List of Major Assemblies	7-3
7-2.	Radio Receiver R-1051H/URR, Parts List	7-4
7-3.	List of Common Item Descriptions	7-135
7-4.	List of Attaching Hardware	7-139
7-5.	List of Manufacturers	7-147
8-1.	Radio Receiver R-1051H/URR, Interconnecting Cable Assemblies	8-4
8-2.	Radio Receiver R-1051H/URR, Installation Standards Summary	8-8

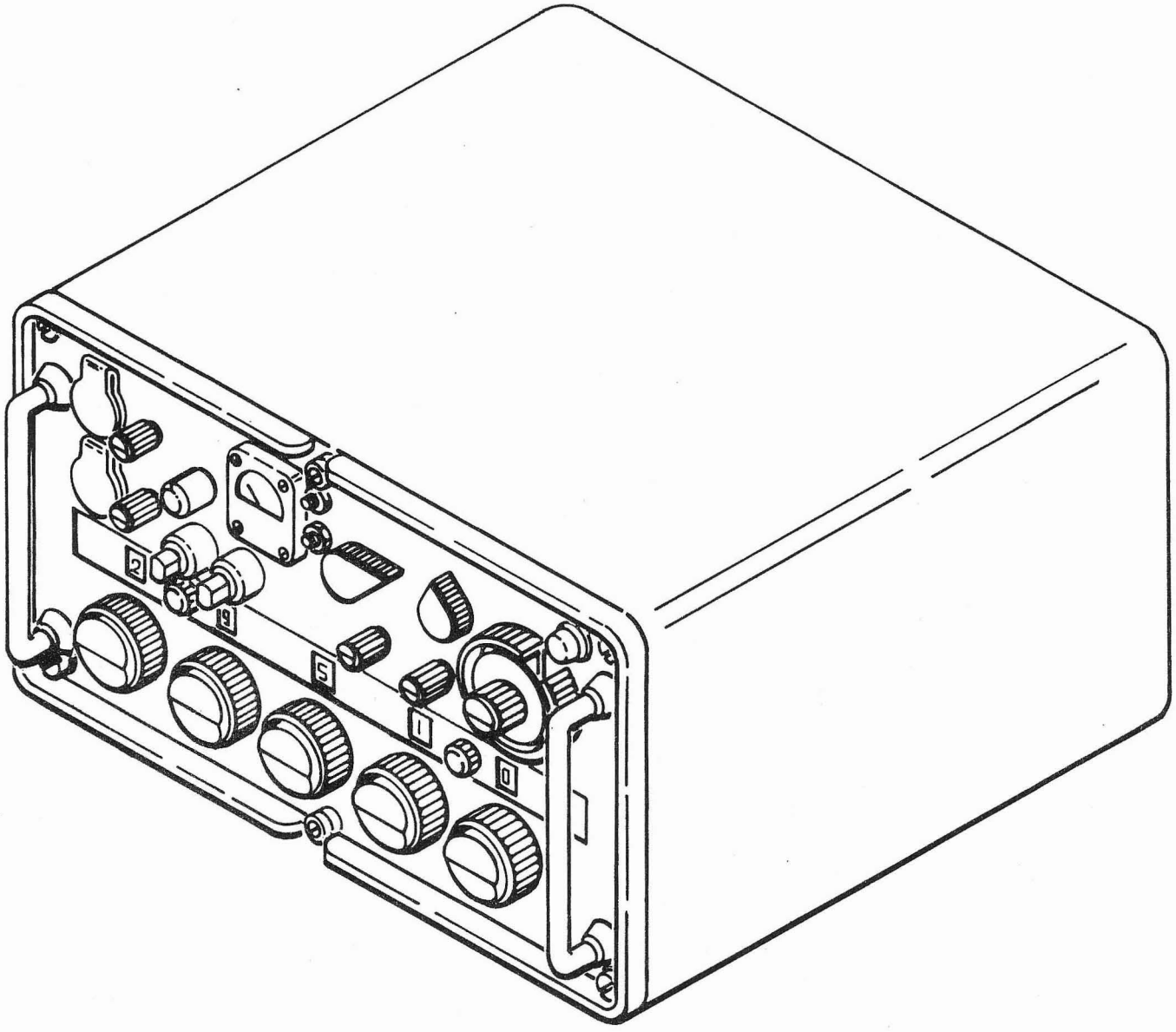

Figure 1-1. Radio Receiver R-1051H/URR

CHAPTER 1

GENERAL INFORMATION AND SAFETY PRECAUTIONS

1-1. SAFETY PRECAUTIONS.

1-2. The safety precautions listed below must be carefully observed at all times when operating or servicing Radio Receiver R-1051H/URR.

1-3. The following are general safety precautions that are not related to any specific procedures and therefore do not appear elsewhere in the publication. These are precautions that personnel must understand and apply during many phases of operation and maintenance.

WARNING

Failure to comply with the instructions in the following paragraphs may result in severe injury or death. Personnel must at all times observe all safety regulations.

a. Be sure you are not grounded when making measurements or adjustments. Hand rails, exposed metal decks, or equipment frames may provide inadvertent ground contacts.
b. Ground case of test equipment whenever possible, especially when test equipment must be hand held or adjusted while making measurements.
c. Do not change tubes before removing power from R-1051H/URR.
d. Always remove power from R-1051H/URR and connect a ground before making adjustments or measurements. Under certain conditions dangerous potentials may exist, even with power controls in the OFF position, because of charges retained by capacitors.
e. Use caution even when measuring low voltages. High voltages may accidentally be present across normally low voltage terminals.
f. Do not place complete reliance on safety interlock switches. Measure or test to be sure that voltages are not present.
g. Do not defeat safety interlock switches unless absolutely necessary for testing or making measurements.

1-4. INTRODUCTION.

1-5. This technical manual describes Radio Receiver R-1051H/URR (hereafter also referred to as R-1051H/URR or receiver), and includes operation, functional description, scheduled maintenance, troubleshooting, corrective maintenance, installation procedures and a parts list for this unit.

1-6. LEVEL OF INFORMATION. This technical manual provides information for the maintenance of the R-1051H/URR for both organizational and depot level. The depot level procedures described in this technical manual should not be attempted at the organizational level because they require special fixtures and test equipment.

1-7. EQUIPMENT DESCRIPTION.

1-8. GENERAL. The R-1051H/URR (Figure 1-1) is a digitally tuned, superheterodyne receiver capable of receiving lower sideband (LSB), upper sideband (USB), independent sideband (ISB), radio teletype (RATT), amplitude modulated (AM), continuous wave (CW) transmissions and Naval Tactical Data Systems (NTDS) Link 11 signals in the 2.0 to 30.0 MHz frequency range. The ISB mode of operation allows two different types of intelligence to be received simultaneously, one on the LSB channel and the other on the USB channel. RATT reception is obtained by using suitable ancillary equipment, such as Teletype Comparator-Converter Group AN/URA-17. The R-1051H/URR may also receive tone-modulated continuous wave (MCW), compatible amplitude modulated (compatible AM), and through the use

of suitable ancillary equipment, facsimile (FAX) transmissions. The R-1051H/URR may be used as a separate, self-contained receiver requiring only a headset, antenna, and 115 Vac primary power source for full operation. The R-1051H/URR is intended for ship and shore installations. For either type of installation, the R-1051H/ URR may be mounted in a standard 19-inch rack, or may be mounted to Shock Mount MT-3114A/UR.

1-9. PHYSICAL CHARACTERISTICS. The R-1051H/URR is housed in a metal case. The chassis is mounted on roller-type slides (one on each side) and is secured to the case by six captive screws through the front panel. When fully extended from the case, the chassis may be tilted on slides at a ±90 degree angle to expose the bottom or top for servicing. All operating controls and indicators are located on the front panel. All power and signal input connections are made on the rear of the case. Handles are secured to the front panel to facilitate withdrawing the chassis and transporting the unit. The chassis contains the chain-drive mechanism for tuning, the receptacles for the plug-in electronic assemblies, a power supply and various other electrical assemblies and components. Figures 1-2 and 1-3 show the locations of the electronic assemblies.

1-10. ELECTRICAL CHARACTERISTICS. The R-1051H/URR employs a digital tuning scheme for automatically tuning to any one of 280,000 operating channels. Additional vernier tuning provides continuous tuning throughout the frequency range. All circuits (except two rf amplification stages) utilize solid-state devices. These circuits are assembled into plug-in electronic assemblies. The frequency generation circuits, which are referenced to an ultra-stable frequency standard, provide a stability of 1 part in 10^8 per day.

1-11. REFERENCE DESIGNATIONS. Table 1-1 lists reference designations and functions of the electronic assemblies of the R-1051H/URR.

1-12. REFERENCE DATA.

1-13. Radio Receiver R-1051H/URR, manufactured by Stewart-Warner Electronics (as Part Number 01A229000-01 under contract N00039-83-C-0292), operates on 115 Vac, single phase, 48 to 420 Hz. Table 1-2 provides a summary of the equipments functional characteristics including capabilities and limitations of the equipment. The crystal complement is listed in table 1-3.

1-14. EQUIPMENT, ACCESSORIES AND DOCUMENTS SUPPLIED.

1-15. Equipment, accessories and documents supplied with the R-1051H/URR are listed in table 1-4.

1-16. EQUIPMENT AND PUBLICATIONS REQUIRED BUT NOT SUPPLIED.

1-17. Equipment and publications required but not supplied with the R-1051H/URR are listed in table 1-5.

1-18. NONSTANDARD ABBREVIATIONS.

1-19. Table 1-6 lists the abbreviations used in this technical manual, which are not contained in MIL-STD-12.

1-20. FACTORY AND FIELD CHANGES.

1-21. Factory changes made to the R-1051H/URR are listed in table 1-7. Completed field changes made to the R-1051H/ URR must be entered in table 1-8.

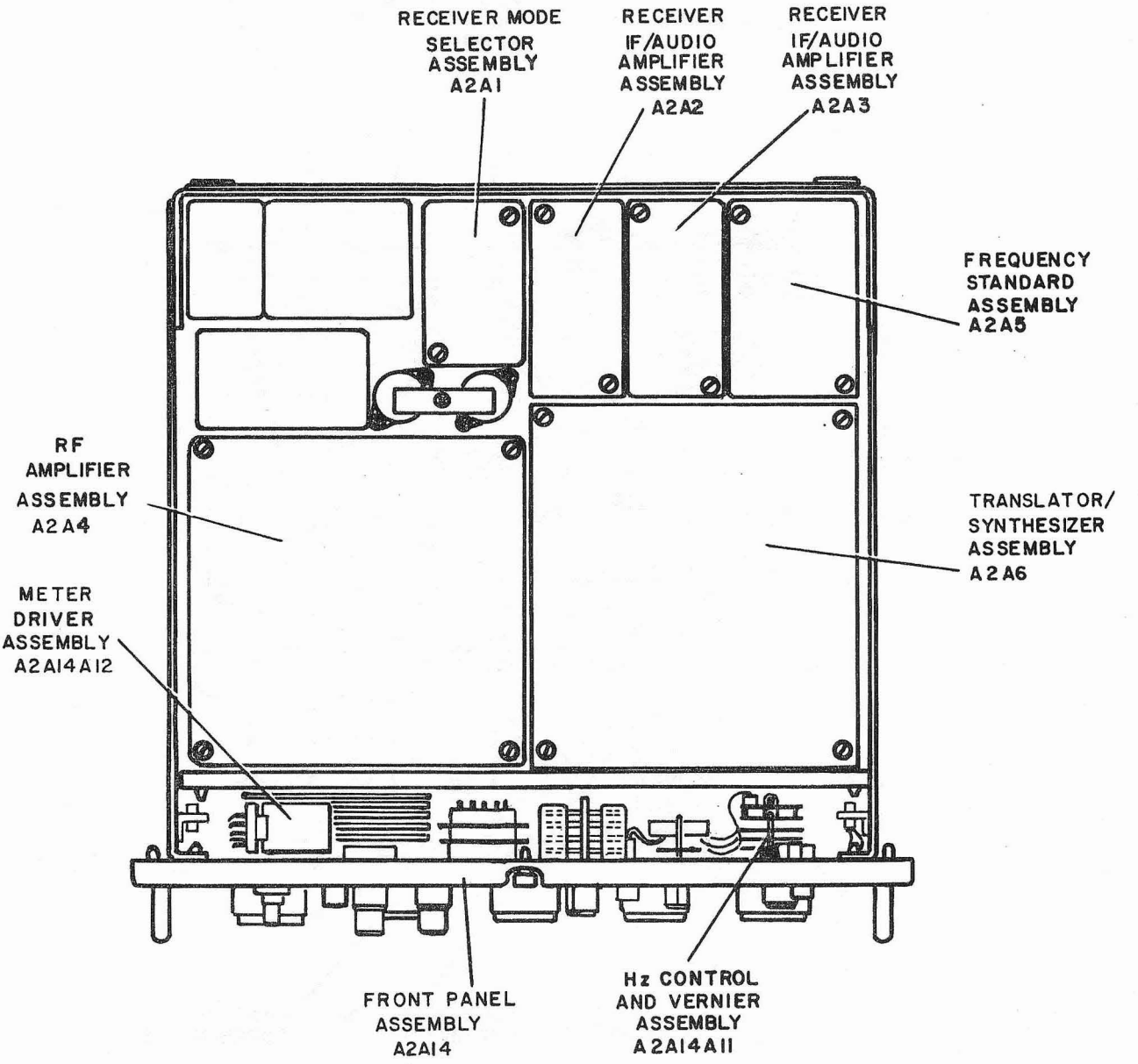

Figure 1-2. Radio Receiver R-1051H/URR
Top View, Case Removed

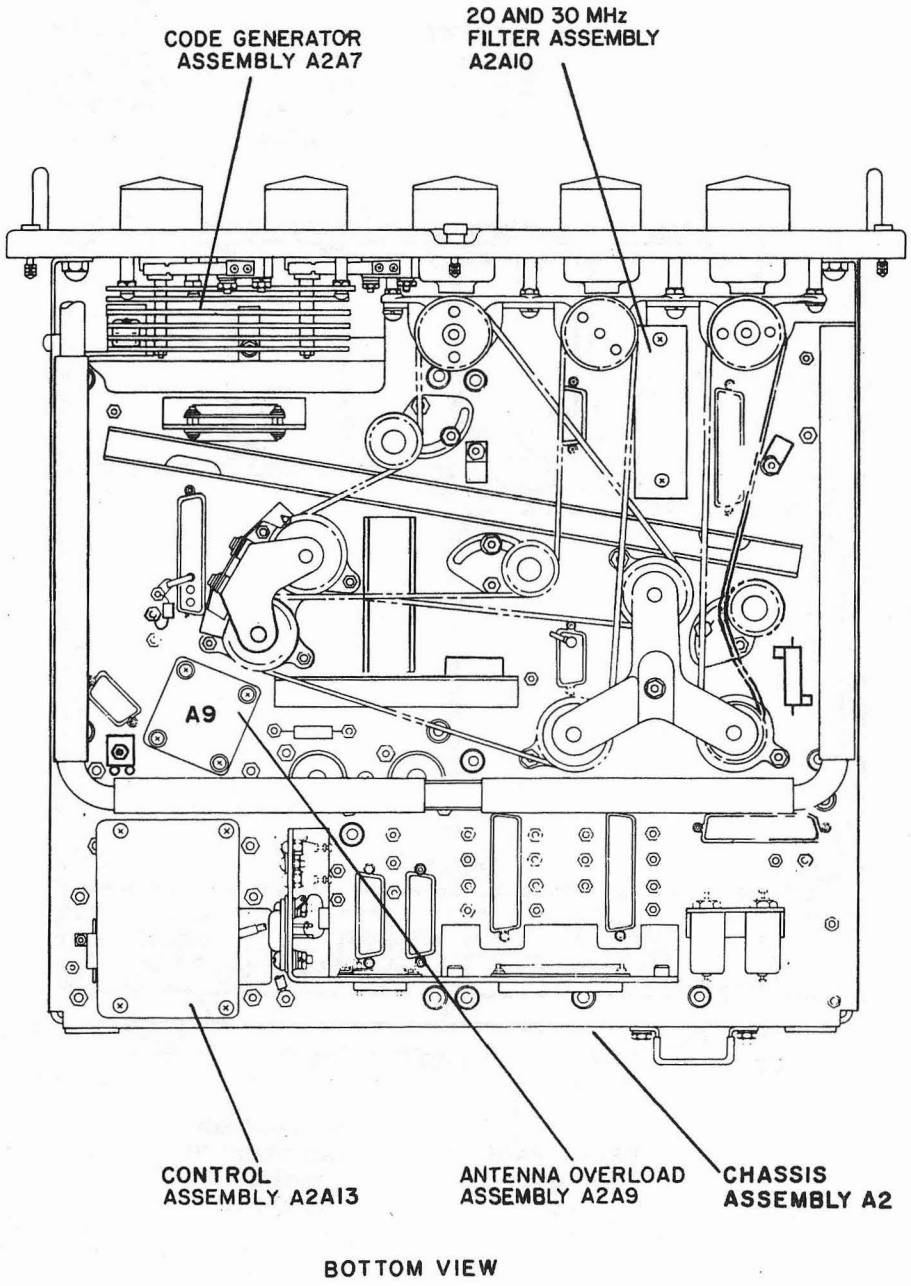

Figure 1-3. Radio Receiver R-1051H/URR
Bottom View, Case Removed

Table 1-1. Radio Receiver R-1051H/URR, Assemblies and Reference Designations

REFERENCE DESIGNATIONS	ASSEMBLY NAME	FUNCTION
A1	Case	Houses Radio Receiver R-1051H/URR
A1A1	Filter Box Assembly	Filters input and output lines to prevent rf transmission feedback on these lines
A1A2	Interlock Switch Assembly	Disconnects 115 Vac power from R-1051H/URR when chassis/panel assembly is withdrawn from case
A2	Chassis Assembly	Provides mounting base for components
A2A1	Mode Selector Assembly	Directs the passage of the IF signal to appropriate LSB and/or USB IF/audio amplifiers. Provides a gating function for a 500 kHz carrier insertion signal. Contains a beat frequency oscillator (BFO) for use with CW signals
A2A2 and A2A3	IF/Audio Amplifier Assemblies	Amplify IF signals, demodulate and amplify intelligence, and provide AGC voltages for use internally and in the rf amplifier
A2A4	Rf Amplifier Assembly	Provides tuned preamplification of signal received from antenna
A2A5	Frequency Standard Assembly	Provides accurate standard frequencies to which all synthesized frequencies are referenced. Provides accurate 500 kHz to IF/audio amplifier for demodulation of 500 kHz IF signal
A2A6	Translator/ Synthesizer Assembly	Receives basic oscillator frequency from frequency standard, synthesizes required frequency signals for triple-conversion mixers and converts the 2 to 30 MHz rf input to the desired 500 kHz IF signal
A2A7	Code Generator Assembly	Produces control signals for automatic tuning of rf amplifier and 10 MHz/1 MHz synthesizer
A2A8	Not Used	
A2A9	Antenna Overload Assembly	Provides protection from excessively high rf input signals
A2A10	20 to 30 MHz Filter Assembly	Improves first IF and image rejection
A2A11	Not Used	

Table 1-1. Radio Receiver R-1051H/URR, Assemblies and Reference Designations (Continued)

REFERENCE DESIGNATIONS	ASSEMBLY NAME	FUNCTION
A2A12	Not Used	
A2A13	Control Assembly	Uses 134 Vac and 37.5 Vac input from transformer A2T1 to generate +110 V and -30 V operating voltages for the receiver. The Hi/Lo Filter Relay A2A13K2 determines the selection of 20 MHz (lo-band) or 30 MHz (hi-band) first IF. The Tune Relay A2A13K1 enables +110 V and +28 V to RF Amplifier A2A4, and it disables those voltages during tuning
A2A14	Front Panel Assembly	Houses controls and indicators for operator interface with the equipment
A2A14A11	Vernier Switch Subassembly	Generates control signals for the 100 Hz synthesizer
A2A14A12	Meter Driver Subassembly	Provides meter dB indications of audio output

Table 1-2. Radio Receiver R-1051H/URR,
Functional Characteristics

FUNCTION	CHARACTERISTIC
Frequency Range	2.0000 to 29.9999 MHz in 100 Hz increments or 2.0 to 30.0 MHz with continuous vernier tuning between 1 kHz increments
Receiver type	Triple-conversion superheterodyne: First IF: 20 or 30 MHz (depending upon frequency of received signal) Second IF: 2.850 MHz Third IF: 500 kHz Aggregate IF bandwidth: Single sideband (SSB) modes: 3.2 kHz; AM/CW: 7 kHz; off-channel rejection -60 dB
Frequency stability	1 part in 10^8 per day
Type of frequency	Synthesizer referenced to a 5 MHz internal standard or control external standard with 0.225 to 5 volt rms into 50 ohms
Modes of operation	LSB, USB, ISB, AM, CW and RATT
Sensitivity (With a nominal impedance of 50 ohms)	0.6 uV for 10 dB $\frac{S+N}{N}$ in SSB and RATT modes; 0.9 uV for CW; 3.0 uV for AM mode
Recommended antenna	50 ohm impedance
Ambient temperature limitations	0° to 50° C
Humidity Limitations	0% to 95%
Power consumption	56 watts (188 BTU/hr)
Primary power requirements	115 Vac ±10 percent, single phase, 48 to 420 Hz
Image rejection	90 dB above 20 MHz, 100 dB below 20 MHz
Audio output	60 mW (minimum) into 600 ohm balanced or unbalanced remote output load; 15 mW (minimum) into 600 ohm unbalanced load (local headset)
Audio harmonic distortion	Less than 2 percent, SSB; less than 5 percent, AM
Heat dissipation	56 W (188 Btu/hr)
Installation	Shock mounted for mobile use; table or rack mounted for fixed station use

Table 1-3. Radio Receiver R-1051H/URR, Crystal Complement

REFERENCE DESIGNATION	TYPE OF CUT	CRYSTAL OSCILLATOR FREQUENCY (MHz)	OPERATING TEMPERATURE RANGE (DEGREES C)	TOLERANCE (PERCENT)
A2A4A9Y1	AT	21.000	0 to 80	0.004
A2A4A10Y1	AT	19.000	0 to 80	0.004
A2A4A19Y1	AT	28.500	0 to 80	0.004
A2A5A1Y1	AT	5.000	86 to 91 (oven controlled)	0.0005

Table 1-4. Radio Receiver R-1051H/URR, Equipment, Accessories and Documents Supplied

QTY	NAME OR NOMENCLATURE		REF DES OR UNIT NO.	OVERALL DIMENSIONS	WEIGHT AND VOLUME
1	Radio Receiver	R-1051H/URR, Installed;	1	7.0 in. H x 17.4 in. W x 18.9 in. D	75 lb 1.3 cu. ft.
		Crated	1	13.3 in. H x 24.0 in. W x 32.0 in. D	85 lb 5.2 cu. ft.
1	Connector Kit Consisting of:	78A226005-21-11	2	2.1 in. H x 8.8 in. W x 6.3 in. D	0.5 lb. 0.07 cu. ft.
2	Plug Connector	MS3106A-10SL-4S	2P5,6		
1	Plug Connector	MS3106A-16S-5S	2P3		
1	Plug Connector	MS3116F14-12S	2P4		
2	Strain Relief Boots	4032585-0701	2MP1,2		
1	Instruction Sheet - Cable Boot	68P226036	None		
1	Cable Clamp	MS3057-8A	2MP3		
1	Coaxial Connector	M39012/16-0101	2P24		
2	Coaxial Connector	M39012/01-0005	2P23/ 2P25		
1	Mounting Base Assembly, consisting of:		3		
1	MT-3114A/UR, Shock Mount	01A228724-01	3	3.6 in. H x 19.7 in. W x 16.7 in. D	18 lb. 0.8 cu. ft.
1	Left Mounting Bracket	07P226206-21-11	3MP15		

Table 1-4. Radio Receiver R-1051H/URR, Equipment, Accessories and Documents Supplied (Continued)

QTY	NAME OR NOMENCLATURE		REF DES OR UNIT NO.	OVERALL DIMENSIONS	WEIGHT AND VOLUME
1	Right Mounting Bracket	07P226206-22-11	3MP16		
6	Cap Screw	MS35307-332	None		
6	Lock Washer	MS35338-140	None		
8	Pan Hd. Screw	MS51958-63	None		
8	Lock Washer	MS35338-138	None		
8	Washer	MS15795-809	None		
6	Washer	MS15795-812	None		
1	Technical Manual Maintenance Standards Book, Radio Receiver R-1051H/URR				
1	Performance Standards Sheet, Radio Receiver R-1051H/URR		None		
1	Operating Instructions, Radio Receiver R-1051H/URR		None		

Table 1-5. Radio Receiver R-1051H/URR, Equipment and Publications Required but Not Supplied

CATEGORY	RECOMMENDED EQUIPMENT	ALTERNATE EQUIPMENT	EQUIPMENT TEST PARAMETERS	APPLICATION
AC Voltmeter	28480-400E	28480-403B-001	Voltage less than 5 mVrms to 25 Vrms and 6 kHz	Troubleshooting and scheduled maintenance
Adapter, BNC-to-N	UG-201/UB-S5	None	Impedance: 50 ohm	Troubleshooting and maintenance
Amplifier/ Mode Selector Test Fixture	TS-3670/ WRC-1	None	Simulates actual operating conditions	Depot maintenance of A2A1, A2A2/ A2A3 assemblies
Antenna	AS-2537A	NT-66047	Impedance: 50 ohm	Reception of rf signals
Audio Amplifier	AM-4453/U	Ragen Model GA2		Speaker amplifier
Coaxial T-Connector, BNC	UG-274A/UJ-01	None	Impedance: 50 ohm	Troubleshooting and maintenance
Connector Contacts, Female	M39029/63-368	None		Maintenance
Connector Contacts, Male	M39029/64-369	None		Maintenance
Contact Crimping Tool	MS31938-1 with MS31938-5P Locator	None		Maintenance
Contact Removal and Insertion Tool	MS18278	None		Maintenance
Digital Multimeter	89536-8800A/AA	89536-8600A-01	2 mVac to 134 Vac; 0 to 123 Vdc	Troubleshooting and scheduled maintenance

Table 1-5. Radio Receiver R-1051H/URR, Equipment and Publications Required but Not Supplied (Continued)

CATEGORY	RECOMMENDED EQUIPMENT	ALTERNATE EQUIPMENT	EQUIPMENT TEST PARAMETERS	APPLICATION
Distortion Analyzer	28480-334A	28480-332A	500 kHz fundamental frequency; 1% distortion	Depot troubleshooting and maintenance
Electronic Counter	28480-5328A-H99	28480-5245L	Frequency to 30 MHz	Troubleshooting and scheduled maintenance
Electronics Installation Maintenance Book	NAVSEA 0967-LP-000-0110	None		Installation
Electronics Installation Maintenance Book	NAVSEA 0967-LP-000-0100	None		
Frequency Standard	AN/URQ-23	AN/URQ-10	Standard frequency; 100 kHz, 5 MHz	Troubleshooting and scheduled maintenance
Grease	MIL-G-23827	Standard Oil Co. Instrument Grease, PED-3527	NSN 9150-00 985-7243	Lubricating chain drive mechanism
Headset	NT-49985/A	GC Products Model J4-825		General operation, troubleshooting and maintenance procedures
600-ohm Impedance Adapter	PJ-005B with RCR20G621JS	None		
Frequency Standard Test Fixture	TS-3667/WRC-1	None	Simulates actual operating conditions	Depot maintenance of A2A5 assembly
Kit, Extender Cable, consisting of:	98738-78A228849-01	None		

Table 1-5. Radio Receiver R-1051H/URR, Equipment and Publications Required but Not Supplied (Continued)

CATEGORY	RECOMMENDED EQUIPMENT	ALTERNATE EQUIPMENT	EQUIPMENT TEST PARAMETERS	APPLICATION
Extender Cable	98738—30A226427-21-11 (4W2)	None		Used with 4W2 to operate Mode Selector Assembly A2A1 outside of chassis assembly
Extender Cable	98738-30A226277-21-11 (4W3)	None		See above
Extender Cable	98738-30A226273-21-11 (4W4)	None		Used with 4W5 to operate RF Amplifier Assembly A2A4 outside of chassis assembly
Extender Cable	98738-30A226426-21-11 (4W5)	None		See above
Extender Cable	98738-30A226274-21-11 (4W6)	None		Used to operate Frequency Standard Assembly A2A5 outside of chassis assembly
Extender Cable (2 ea.)	98738-A/U 30A226275-21-11 (4W7/4W8)	None		Both used with 4W1/4W9 to operate Translator Synthesizer Assembly A2A6 outside of chassis assembly
Extender Cable	98738-30A226280-21-11 (4W1/4W9)	None		Used to operate IF/Audio Amplifier Assemblies A2A2/A2A3 outside of chassis assembly

Table 1-5. Radio Receiver R-1051H/URR, Equipment and Publications Required but Not Supplied (Continued)

CATEGORY	RECOMMENDED EQUIPMENT	ALTERNATE EQUIPMENT	EQUIPMENT TEST PARAMETERS	APPLICATION
Kit Extender Card, consisting of:	98738-78A228847-01	None		
Extender Card	98738-01A228390-01	None		Depot troubleshooting of A2A6A19
Extender Card	98738-01A228392-01	None		Depot troubleshooting of A2A6A13
Extender Card	98738-01A228394-01	None		Depot troubleshooting of A2A6A14
Extender Card	98738-01A228396-01	None		Depot troubleshooting of A2A6A16
Extender Card	98738-01A228398-01	None		Depot troubleshooting of A2A6A17
Extender Card	98738-01A228400-01	None		Depot troubleshooting of A2A6A20
MIL-STD-1310( )				Installation
Multimeter, Analog	55026-260-6XLP	AN/USM-311	General voltage and resistance measurements	General use
Oscilloscope	80009-465M with 10:1 probe	AN/USM-281E with 30669-1902 plug-in	Dual trace	Troubleshooting and scheduled maintenance
Protective coating	Type ER per MIL-I-46058	None		Protection of repaired parts
Pulse Generator	52542-114A	None	Positive pulse waveforms	Depot troubleshooting and maintenance

Table 1-5. Radio Receiver R-1051H/URR, Equipment and Publications Required but Not Supplied (Continued)

CATEGORY	RECOMMENDED EQUIPMENT	ALTERNATE EQUIPMENT	EQUIPMENT TEST PARAMETERS	APPLICATION
51-ohm Resistive Load	RCR20G510JS	None		
100-ohm Resistive Load	RCR20G101JS	None		
620-ohm Resistive Load (2 ea.)	RCR20G621JSN	None		
Rf Amplifier Test Fixture	TS-3685/ WRC-1	None	Simulates actual operating conditions	Depot maintenance of A2A4 assembly
Rf Insert Crimping Tool	MS22520/1-01 with MS22520/ 10-06 Die	None		Maintenance
Rf Insert Crimping Tool	M22910/7-1 with 89020-612971 Die	M22910/7-18 Die		Maintenance of A2A6 sub-assemblies
Rf Insert Connector, Female	71785-318-11-99-283	None		Troubleshooting and maintenance
Rf Insert Connector, Male	72785-318-11-99-285-01	None		Troubleshooting and maintenance
Rf Insert Extractor Tool	MS17806	91146-CET-C6B		Maintenance
Rf Insert Insertion Tool	MS17805	None		Maintenance
Rf Millivoltmeter	04901-92B-S5 with probe tip 04901-91-13B and Rf probe 04901-91-12F	04901-91CA	Rf voltage 20 mVrms to 6.0 Vrms, 35 MHz	Troubleshooting and scheduled maintenance

Table 1-5. Radio Receiver R-1051H/URR, Equipment and Publications Required but Not Supplied (Continued)

CATEGORY	RECOMMENDED EQUIPMENT	ALTERNATE EQUIPMENT	EQUIPMENT TEST PARAMETERS	APPLICATION
Rf Signal Generator	28480-8660C-001-100 with plug-ins 86601A and 86632B	28480-8640B-001-002-003	50 kHz to 650 MHz; 0.1 uV to 3.0 volts	Troubleshooting
Sealing Compound	Grade E per MIL-S-22473	None		Locking of fasteners
Semiconductor Device Test Set	55413-900J-01	AN/USM-206	Checks diodes and transistors in-circuit and out-of circuit	Troubleshooting
Speaker	LS-474/U	Quam Model 27A05Z8 with Triad Transformer type S-65X		Audio monitoring
Spectrum Analyzer	28480-8553B-E03, with AC Probe 28480 1121A	80009-492-06	Tests inter-modulation rf products to 3.5 kHz	Depot Trouble-shooting and maintenance
Teletype Comparator-Converter Group	AN/URA-17	None		RATT operation
Translator Synthesizer Test Fixture	TS-3665/WRC-1	None	Simulates actual operating conditions	Depot maintenance of A2A6 assembly
Trichloro-ethane	O-T-620	None	NSN 6810-00-930-6311	Component cleaning

Table 1-6. Nonstandard Abbreviations

ABBREVIATION	TERM
RATT	Radio teletype
NSWE	Not supplied with equipment
NTDS	Naval Technical Data System

Table 1-7. Radio Receiver R-1051H/URR
Factory Changes

CHANGE NUMBER	NOMENCLATURE	DESCRIPTION
Stewart-Warner CA96724	10 MHz/1MHz Circuit Card Assembly A2A6A13, P/N 01A228713-01, Rev. A and higher.	A2A6A13R7, Mil type RCR07G105JS, deleted. A2A6A13L9, Mil type MS75084-11, added.
Stewart-Warner CA96907	10 MHz/1 MHz Circuit Card Assembly IC A2A6A13U9, P/N 48P228882-01, Rev. A and higher.	Programming of "immaterial" logic states of A2A6A13U9, P/N 48P228882-01, changed to logic lows.

Table 1-8. Radio Receiver R-1051H/URR, Field Changes

CHANGE NUMBER	TYPE	DESCRIPTION	EIB	FIELD CHANGE KIT NSN

CHAPTER 2

OPERATION

2-1. INTRODUCTION.

2-2. Receiver R-1051H/URR is designed to receive upper sideband (USB), lower sideband (LSB), independent sideband (ISB), continuous wave (CW), tone modulated CW (MCW), compatible and standard amplitude modulated (AM), radio teletype (RATT) transmissions and Naval Tactical Data Systems (NTDS) Link 11 signals in the 2 to 30 MHz frequency range. Reception in any mode other than RATT can be achieved with the aid of a handset or other appropriate ancillary equipment connected to the appropriate jack on the R-1051H/URR front panel. Receptacles on the rear of the case (Figure 2-1) are provided for connecting the audio output to remote ancillary equipment. The R-1051H/URR is operated from an external frequency standard, but may be operated from its internal frequency standard if necessary. In an emergency the output of the internal frequency standard can also be used to standardize other equipment, such as another R-1051( )/URR or Radio Transmitter T-827( )/URT.

NOTE

The output of the internal frequency standard is disabled when the receiver is in the STDBY or OFF mode, and is momentarily interrupted when the front panel MHz control setting is changed.

2-3. OPERATING CONTROLS, INDICATORS, AND CONNECTORS.

2-4. All controls, indicators and connectors required for normal operation of the R-1051H/URR are located on the R-1051H/URR front and rear panels (except the frequency standard control and indicator). All controls, indicators, and connectors are identified in figure 2-1 and listed in table 2-1.

2-5. OPERATING PROCEDURES.

2-6. Table 2-2 gives operating procedures for each mode of operation of the R-1051H/URR.

2-7. INTERFERENCE AND EMERGENCY OPERATION.

2-8. Table 2-3 gives operating procedures for interference conditions. There are no emergency operating procedures.

2-9. NORMAL AND EMERGENCY SHUTDOWN PROCEDURES.

2-10. Procedures for normal and emergency shutdown are listed in table 2-4. The emergency shutdown procedure should be used whenever further operation would constitute a hazard to personnel and/or the equipment.

2-11. OPERATOR'S MAINTENANCE PROCEDURES.

2-12. Table 2-5 lists preventive maintenance procedures which should be performed by the R-1051H/URR operator.

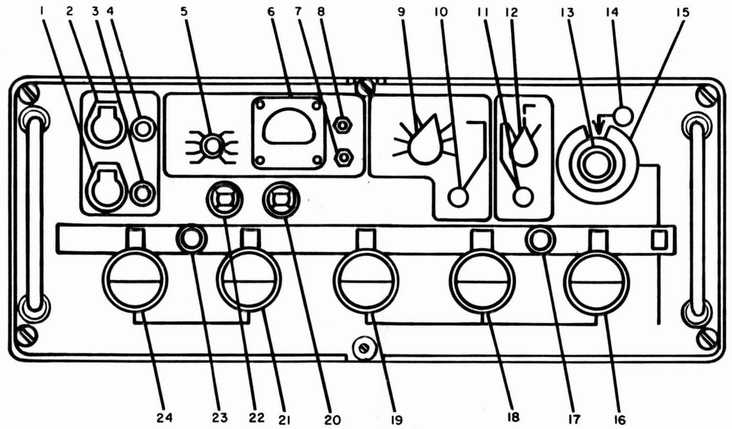

FRONT PANEL

1. PHONE LSB jack A2A14J1
2. PHONE USB jack A2A14J2
3. PHONE LSB VOL control A2A14R4
4. PHONE USB VOL control A2A14R5
5. AUDIO LEVEL meter switch A2A14A12S1
6. AUDIO LEVEL meter A2A14M1
7. LSB LINE LEVEL control A2A14R1
8. USB LINE LEVEL control A2A14R2
9. MODE SELECTOR Switch A2A14S2
10. BFO control A2A14R6
11. GAIN control A2A14R3
12. MGC/AGC switch A2A14S3
13. Hz vernier control A2A14A11R1
14. Hz vernier indicator lamp A2A14DS5
15. Hz switch A2A14A11S1
16. 1 kHz control A2A14MP5
17. kHz indicator lamp A2A14DS3
18. 10 kHz control A2A14MP4
19. 100 kHz control A2A14MP3
20. 3/4 A fuse A2A12F2
21. 1 MHz control A2A7S4
22. 3/4 A fuse A2A14F1
23. MHz indicator lamp A2A14DS4
24. 10 MHz control A2A7S3

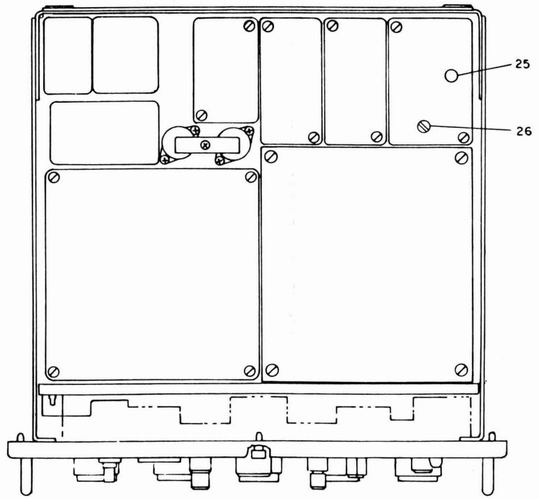

TOP VIEW

25. Comparator lamp A2A5A2DS1

26. 5 MHz OSC SOURCE switch A2A5A2S1

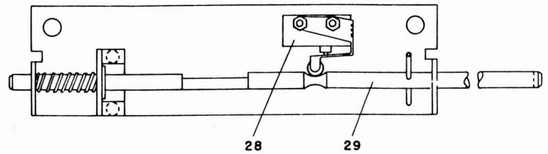

(27) INTERLOCK SWITCH ASSEMBLY A1A2

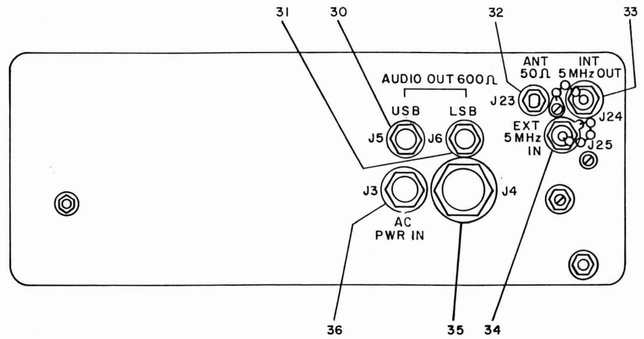

REAR PANEL CONNECTORS

27. INTERLOCK SWITCH ASSEMBLY A1A2
28. Switch A1A2S1
29. Interlock Shaft A1A2MP9
30. USB AUDIO OUT 600 OHMS A1A1J5
31. LSB AUDIO OUT 600 OHMS A1A1J6
32. ANT 50 OHMS A1J23
33. INT 5 MHz OUT A1J24
34. EXT 5 MHz IN A1J25
35. Remote control A1A1J4
36. AC PWR IN A1A1J3

Figure 2-1. Radio Receiver R-1051H/URR, Operating Controls, Indicators and Connectors

Table 2-1. Operating Controls, Indicators, and Connectors

KEY (FIG. 2-1)	CONTROL/INDICATOR/ CONNECTOR	FUNCTION
1	PHONE LSB jack A2A14J1	Used to connect headset to LSB receiver output
2	PHONE USB jack A2A14J2	Used to connect headset to USB receiver output
3	PHONE LSB VOL control A2A14R4	Used to adjust volume of audio applied to headphone in LSB and ISB (LSB) operation
4	PHONE USB VOL control A2A14R5	Used to adjust volume of audio applied to headphone in USB, ISB (USB), RATT, CW, and AM operation
5	AUDIO LEVEL meter switch A2A14A12S1	Ten-position switch used to activate AUDIO LEVEL meter (four each USB, LSB and two OFF): USB/LSB — Enables AUDIO LEVEL meter to indicate USB/LSB audio level supplied to remote lines +20 — This position of the selector switch places the zero of the meter dial at a power level of +20 dBm. The lower end of the scale will be at +10 dBm and a full-scale positive reading will signify +22 dBm +10 — This position of the selector switch places the zero of the meter dial at a power level of +10 dBm. The lower end of the scale will be at 0 dBm and a maximum full-scale positive deflection will occur at a level of +12 dBm 0 — This position of the selector switch places the zero on the meter dial at a power level of 0 dBm. The lower end of the scale will be at -10 dBm and a full-scale positive deflection will signify +2 dBm -10 — This position of the selector switch places the zero on the meter dial at a power level of -10 dBm. The maximum down-scale deflection will now signify -20 dBm and a full-scale positive deflection will signify -8 dBm

Table 2-1. Operating Controls, Indicators, and Connectors (Continued)

KEY (FIG. 2-1)	CONTROL/INDICATOR/ CONNECTOR	FUNCTION
(5 Cont.)		OFF — Two OFF positions are available for the selector switch. Turning the switch to either OFF position as convenient deactivates the AUDIO LEVEL meter The four available operating positions of the selector switch for both USB and LSB provide for scaling the meter dial to give an appropriate mid-scale indication of the power level in dBm
6	AUDIO LEVEL meter A2A14M1	Indicates level of LSB or USB audio supplied to remote lines, as selected by AUDIO LEVEL switch
7	LSB LINE LEVEL control A2A14R1	Used to adjust volume of remote audio for LSB and ISB (LSB) operation
8	USB LINE LEVEL control A2A14R2	Used to adjust volume of remote audio for USB ISB (USB), RATT, CW and AM operation
9	MODE SELECTOR Switch A2A14S2	Eight-position switch used to select R-1051H/URR modes of operation: OFF — No power applied STDBY — +28 V to frequency standard and tube filaments energized. LSB — R-1051H/URR operates in lower sideband mode RATT — R-1051H/URR operates in radio teletype mode AM — R-1051H/URR operates in amplitude modulation mode CW — R-1051H/URR operates in continuous wave mode USB — R-1051H/URR operates in upper sideband mode ISB — R-1051H/URR operates in independent sideband mode

Table 2-1. Operating Controls, Indicators, and Connectors (Continued)

KEY (FIG. 2-1)	CONTROL/INDICATOR/ CONNECTOR	FUNCTION
10	BFO control A2A14R6	Used to adjust pitch of audio output tone, when receiving CW signals, with MODE SELECTOR switch in CW position
11	GAIN control A2A14R3	Used to control gain of rf and IF amplifiers when MGC/AGC switch is set to MGC
12	MGC/AGC switch A2A14S3	Three-position switch selects manual or automatic gain control function for R-1051H/URR: MGC — AGC is disabled, MGC is enabled SLOW — AGC responds slowly to changes in signal strength FAST — AGC responds quickly to changes in signal strength
13	Hz vernier control A2A14A11R1	R-1051H/URR may be tuned continuously between any two 1 kHz steps when Hz switch is in V (Vernier) position
14	Hz vernier indicator lamp A2A14DS5	Flashes when Hz switch is in V position
15	Hz switch A2A14A11S1	Eleven-position switch: 000 — R-1051H/URR is tuned to frequency indicated on MHz and kHz indicators 100-900 — Used to select 100 Hz digit of desired operating frequency V — Position activates Hz vernier control A2A14A11R1. Hz vernier indicator flashes
16	1 kHz control A2A14MP5	Used to select 1 kHz digit of desired operating frequency. Digit selected is displayed in window above control
17	kHz indicator lamp A2A14DS3	Illuminates the three windows above the kHz controls
18	10 kHz control A2A14MP4	Used to select 10 kHz digit of desired operating frequency. Digit selected is displayed in window above control

Table 2-1. Operating Controls, Indicators, and Connectors (Continued)

KEY (FIG. 2-1)	CONTROL/INDICATOR/ CONNECTOR	FUNCTION
19	100 kHz control A2A14MP3	Used to select 100 kHz digit of desired operating frequency. Digit selected is displayed in window above control
20	F2 3/4A fuse A2A14F2	Protects R-1051H/URR against overload; indicator glows when fuse is open
21	1 MHz control A2A7S4	Used to select 1 MHz digit of desired operating frequency. Digit selected is displayed in window above control. Turret drive motor in RF Amplifier Assembly A2A4 operates when digit is selected
22	F1 3/4A fuse A2A14F1	Protects R-1051H/URR against overload; indicator glows when fuse is open
23	MHz indicator lamp A2A14DS4	Illuminates the two windows above the MHz control
24	10 MHz control A2A7S3	Used to select 10 MHz digit of desired operating frequency. Digit selected is displayed in window above control. Turret drive motor in RF Amplifier Assembly A2A4 operates when digit is selected
25	Comparator lamp A2A5A2DS1	Dims and brightens at a rate proportional to difference in frequency between internal and external frequency standards
26	5 MHz OSC SOURCE switch A2A5A2S1	Three-position switch used to control operating mode of Frequency Standard Assembly A2A5: EXT (OVEN STBY) - Allows receiver to operate from external frequency standard while maintaining operating temperature of crystal oven in A2A5 EXT NORMAL - Allows receiver to operate from external frequency standard without maintaining operating temperature of crystal oven in A2A5 INT/COMP - Receiver operates from internal frequency standard A2A5. Also used to compare output of A2A5 with an external standard. Operating temperature of crystal oven in A2A5 is maintained

Table 2-1. Operating Controls, Indicators, and Connectors (Continued)

KEY (FIG. 2-1)	CONTROL/INDICATOR/ CONNECTOR	FUNCTION
27	Interlock Switch Assembly A1A2 consisting of:	Switch A1A2S1 disconnects 115 Vac power from R-1051H/URR when chassis/panel assembly is withdrawn from case. The switch can be defeated by gripping shaft A1A2MP9 and pulling outward
28	Switch A1A2S1	
29	Interlock Shaft A1A2MP9	
30	USB AUDIO OUT 600 OHMS connector A1A1J5	Connects USB audio output to external equipment
31	LSB AUDIO OUT 600 OHMS connector A1A1J6	Connects LSB audio output to external equipment
32	ANT 50 OHMS connector A1J23	Connects antenna or antenna coupler
33	INT 5 MHz OUT connector A1J24	Distributes 5 MHz frequency from Frequency Standard Assembly A2A5 to external equipment
34	EXT 5 MHz IN connector A1J25	Connects an external 5 MHz frequency standard to the R-1051H/URR
35	(Remote control connector) A1A1J4	(Not used in R-1051H/URR) Can be used for future unspecified modifications or additions
36	AC PWR IN connector A1A1J3	Connects an ac power source for operation of the R-1051H/URR

Table 2-2. Operating Procedures

MODE OPERATION	CONTROLS AND SETTINGS	PROCEDURE	OBSERVATIONS OR REMARKS
Turn on	Set MODE SELECTOR switch to STDBY	If using internal frequency standard, allow a 60 minute warm-up and at least a 96 hour warm-up for optimum frequency stability	MHz and kHz indicator lamps illuminate
Preliminary Setup	Set MODE SELECTOR switch to the desired mode of operation	1. Using MHz, kHz, Hz (and vernier control) select the desired operating frequency	Frequency selected is displayed in windows above MHz and kHz controls
		2. Depending on mode of operation selected, connect headset to PHONE USB jack or PHONE LSB jack	
		3. Set MGC/AGC switch to required type of AGC. If MGC is selected, rotate GAIN control fully clockwise	
		4. Set AUDIO LEVEL meter switch to LSB or USB, depending on the mode previously selected	
		5. Set LSB or USB LINE LEVEL control for 0 dB or as required initially for tuning purposes. After adjustment set AUDIO LEVEL switch to OFF	Observe AUDIO LEVEL meter indication
		6. Set PHONE LSB VOL or PHONE USB VOL control for desired headphone volume	

Table 2-2. Operating Procedures (Continued)

MODE OPERATION	CONTROLS AND SETTINGS	PROCEDURE	OBSERVATIONS OR REMARKS
CW	Set MODE SELECTOR switch to CW	1. Set MGC/AGC switch to MGC 2. Set frequency controls to the desired frequency 3. Adjust BFO control for the preferred beat note 4. Optimize sensitivity by rotating GAIN control to the position yielding best sensitivity (discernible by ear)	
Alternate CW	Set MODE SELECTOR to either LSB or USB	1. Set MGC/AGC switch to SLOW 2. Set frequency controls to 1.0 kHz from desired frequency 3. Set Hz switch to V, and then adjust Hz vernier control to obtain the preferred beat note	Set above desired frequency for LSB; below desired frequency for USB
AM	Set MODE SELECTOR switch to AM	1. Set frequency controls to desired frequency 2. Set MGC/AGC switch to SLOW	
Single Channel RATT	Set MODE SELECTOR switch to RATT	1. Set frequency controls to 2 kHz below the assigned frequency 2. Set MGC/AGC switch to SLOW	Setting enables radio teletypewriter reception

Table 2-2. Operating Procedures (Continued)

MODE OPERATION	CONTROLS AND SETTINGS	PROCEDURE	OBSERVATIONS OR REMARKS
Single Channel FAX (USB)	Set MODE SELECTOR switch to USB	1. Set frequency controls to 2.7 kHz below assigned frequency 2. Set MGC/AGC switch to SLOW	Setting enables facsimile reception on USB
Single Channel FAX (LSB)	Set MODE SELECTOR switch to LSB	1. Set frequency controls 2.7 kHz above the assigned frequency 2. Set MGC/AGC switch to SLOW	Setting enables facsimile reception on LSB
USB Voice	Set MODE SELECTOR switch to USB	1. Set frequency controls to assigned frequency 2. Set MGC/AGC switch to SLOW	
LSB Voice	Set MODE SELECTOR switch to LSB	1. Set frequency controls to assigned frequency 2. Set MGC/AGC switch to SLOW	
USB Tone Multiplex or TADIL A Data	Set MODE SELECTOR switch to USB	1. Set frequency controls 1.5 kHz below assigned frequency 2. Set MGC/AGC switch to FAST	When operation is from an external frequency standard set 5 MHz OSC SOURCE switch A2A5A2S1 to EXT NORMAL
LSB Tone Multiplex or TADIL A Data	Set MODE SELECTOR switch to LSB	1. Set frequency controls 1.5 kHz above assigned frequency	When operation is from an external frequency standard set 5 MHz OSC SOURCE switch A2A5A2S1 to EXT NORMAL

Table 2-2. Operating Procedures (Continued)

MODE OPERATION	CONTROLS AND SETTINGS	PROCEDURE	OBSERVATIONS OR REMARKS
		2. Set MGC/AGC switch to FAST	
ISB	Set MODE SELECTOR switch to ISB	Set frequency control switches to assigned frequency. Adjust AGC to complement the received signal	Enables simultaneous reception on both sidebands
Shutdown	Set MODE SELECTOR switch to STDBY		To eliminate required warm-up period after start up, leave MODE SELECTOR switch in STDBY if internal frequency standard is used
Turnoff	Set MODE SELECTOR switch to OFF	Pull MODE SELECTOR switch out to turn to OFF	Completely shuts down R-1051H/URR. MHz and kHz indicators will extinguish
Emergency Shutdown	Bulkhead distribution switch or circuit breaker	Turn off	
	NOTE If internal frequency standard is used, return R-1051H/URR to standby mode as soon as possible after energizing condition is removed. Allow a 60 minute warm-up for general operation and, if using internal frequency standard, at least a 96 hour warm-up for optimum frequency stability.		

Table 2-3. Operating Procedures for Interference Conditions

INTERFERENCE CONDITION/ MODE	CONTROLS AND SETTINGS	PROCEDURE	REMARKS
All Modes		To counter interference change operating mode and/or frequency, if possible	Refer to table 2-2 for operating procedures
CW Adjacent Channel Interference	Set MODE SELECTOR switch to USB	1. Set frequency controls 1 kHz below assigned frequency 2. Set Hz switch to V 3. Adjust vernier control for best reception 4. Set MGC/AGC switch to SLOW	This mode provides narrower bandwidth than that used in CW mode. Narrower bandwidth is useful when adjacent interference becomes acute
CW and USB Adjacent Channel Interference	Set MODE SELECTOR switch to USB	1. Set frequency controls 1 kHz above assigned frequency 2. Set Hz switch to V 3. Adjust vernier control for best reception 4. Set MGC/AGC switch to SLOW	This mode may be used when adjacent channel interference is acute in CW and USB modes
Single Channel RATT Adjacent Channel Interference	Set MODE SELECTOR switch to USB	1. Set frequency controls to 2 kHz below assigned frequency 2. Set MGC/AGC switch to SLOW	This mode may be used for RATT when adjacent channel interference in the RATT mode is acute
Single Channel RATT Adjacent Channel Interference	Set MODE SELECTOR switch to LSB	1. Set frequency controls to 2 kHz above assigned frequency 2. Set MGC/AGC switch to SLOW	This mode may be used when adjacent channel interference is acute in the RATT and USB modes

Table 2-4. Normal and Emergency Shutdown Procedures

FUNCTION	CONTROL/DEVICE	ACTION
Normal Shutdown	MODE SELECTOR switch	Set to STDBY (Set to OFF if full shutdown is desired)
Emergency Shutdown	Bulkhead Distribution switch or circuit breaker	Turn off

NOTE

If operating from the internal frequency standard during normal shutdown, leave the MODE SELECTOR switch at STDBY so that the oscillator oven remains energized. If the MODE SELECTOR switch is set to OFF a minimum one hour warm-up will be required after restoring power to receiver internal frequency standard accuracy for general operation.

Table 2-5. Operator's Maintenance Procedures

PERIOD	PROCEDURE	REMARKS
Daily	Tighten loose handles, mounting screws and other hardware	
Daily	Check. Are all connectors properly seated and in the right location? Are all switches and controls properly set? (Refer to table 2-2 for operating instructions)	Operating frequency is indicated in windows above MHz and kHz control knobs
Daily	Set MODE SELECTOR switch to STDBY. Check all fuses. Associated indicator lamp will light if a fuse is defective. Replace defective fuses	
Daily	Check receiver operation	See table 4-3
Monthly	Clean exterior	See table 4-2
	WARNING Remove primary power before checking any receiver parts. Do not rely on safety interlock switches. Observe precautions of paragraph 1-1.	
Semiannually	Clean interior	See table 4-2
Semiannually	Inspect for broken, frayed or damaged cable assemblies.	Replace affected conductors/cables, or damaged cable assembly coverings

CHAPTER 3

FUNCTIONAL DESCRIPTION

3-1. INTRODUCTION.

3-2. This chapter describes the principles of operation of Radio Receiver R-1051H/URR. The description is presented at three levels. The first level is an overall functional description of the receiver to the level of detail shown on the overall functional block diagram. The second level is a more detailed discussion of each of the functions, based on signal flow diagrams and concentrating on the functional operation of the principal assemblies and subassemblies involved with each function. Power distribution and control functions are also described with reference to the appropriate power distribution and control diagrams. The third level, based on schematic diagrams, is a discussion of detailed circuit operation of all electronic circuits differing substantially from those covered in NAVSEA 0967-LP-000-0120.

3-3. OVERALL FUNCTIONAL DESCRIPTION.

3-4. GENERAL. The overall functional block diagram (Figure 3-1) depicts the signal flow through Radio Receiver R-1051H/URR from antenna to audio output and the relationship of various assemblies to the signal path.

3-5. SIGNAL INPUT (Figure 3-1). The rf input from the antenna first passes through Low Pass Filter A2FL3. This filter attenuates spurious signals generated in the receiver, which might be conducted out through the antenna. The input then passes through Antenna Overload Assembly A2A9. The primary purpose of this assembly is to protect RF Amplifier Assembly A2A4 from any excessively high amplitude input signals received by the antenna. The antenna overload circuit also protects the rf amplifier whenever the receiver is tuning to new MHz bands or is deenergized.

3-6. RF AMPLIFIER (Figure 3-1). The rf input from the antenna is applied to RF Amplifier Assembly A2A4. Here the signal is amplified to produce the rf signal level required for proper operation of the Translator/Synthesizer Assembly A2A6. Gain of the rf amplifier stages varies in response to manual or automatic gain control (mgc or AGC) voltage feedback derived from the IF signal level in IF Audio Assembly A2A2 or A2A3. Selection of circuit components in the rf amplifier stages is accomplished via mechanical inputs from the 10 MHz, 1 MHz, 100 kHz and 10 kHz front panel controls. The 10 MHz and 1 MHz controls couple mechanically to Code Generator Assembly A2A7, which generates a five-wire tuning code (consisting of opens and grounds), which is applied to the rf amplifier. The 100 kHz and 10 kHz controls couple mechanically directly to the rf amplifier to select desired circuit components. The amplifier rf signal is filtered by 20 or 30 MHz (rejection) Filter Assembly A2A10 before entering the high frequency mixer stage of RF Translator Subassembly A2A6A8. Selection of the 20 MHz or 30 MHz rejection filter in A2A10 is made in response to the hi-lo band control signal from Code Generator Assembly A2A7.

3-7. CODE GENERATOR ASSEMBLY (Figure 3-1). Code Generator Assembly A2A7 produces three sets of five-wire tuning codes (opens and grounds) as determined by the settings of the front panel MHz controls. One tuning code provides frequency band selection in the motor-driven turret of the RF Amplifier Assembly A2A4. A second tuning code is applied to 10 MHz/1 MHz Synthesizer Subassembly A2A6A13. Here the injection signal required for final frequency conversion is selected by the action of the code in programming the divider network. The third tuning code is not used in the R-1051H/URR receiver. Code Generator Assembly A2A7 also supplies a hi-lo band control signal to the A2A6A8, A2A6FL5 and A2A6A17 subassemblies of Translator/Synthesizer A2A6.

3-8. FREQUENCY STANDARD (Figure 3-1). An external, stable, 5 MHz signal from the ship's frequency standard distribution

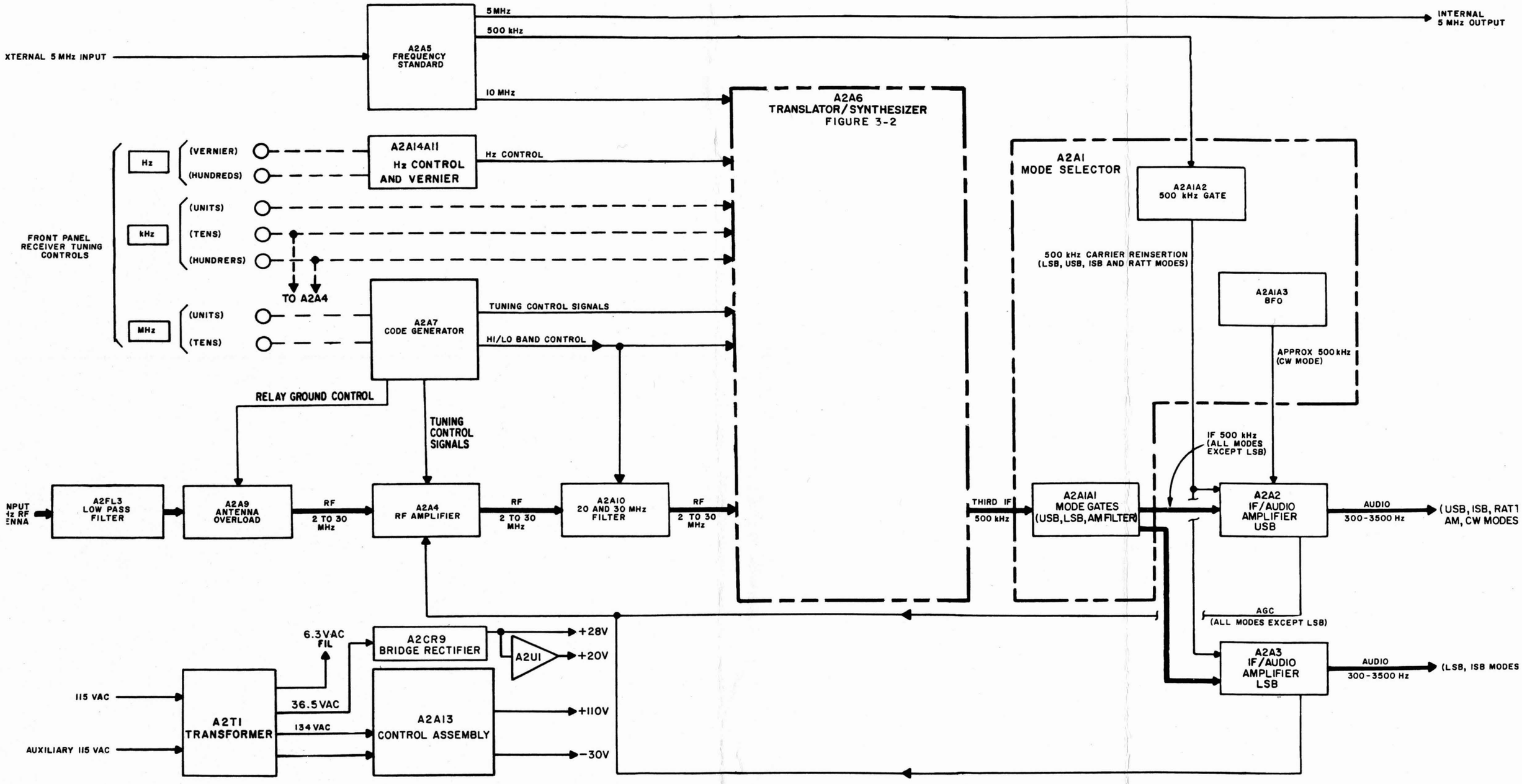

Figure 3-1. Radio Receiver R-1051H/URR Overall Functional Block Diagram

system is normally supplied to Frequency Standard Assembly A2A5. This external 5 MHz is used as a reference for generation of the 10 MHz and 500 kHz outputs. A 5 MHz, oven-mounted, crystal oscillator, within Frequency Standard Assembly A2A5, also provides a frequency standard to, which all frequencies used in the R-1051H/URR may be referenced. The external or internal 5 MHz frequency is converted to 500 kHz and 10 MHz, the latter for use by Translator/Synthesizer Assembly A2A6 as a reference for Frequency Generator A2A6A16. The 500 kHz frequency is used by Mode Selector Assembly A2A1. The basic 5 MHz reference frequency is applied to output jack A1J24 for external use.

3-9. The Frequency Standard may be operated in one of three modes: (1) INT/COMP - internal standard operation; flashing lamp indicates frequency error from external standard signal; (2) EXT NORMAL - operates an external standard with oven and internal oscillator off. The Frequency Standard will automatically switch to internal operation if external standard fails: (3) EXT STBY - operates on external standard with internal oscillator and oven on. The Frequency Standard A2A5 digital circuitry will automatically switch to internal operation if external standard fails.

3-10. TRANSLATOR/SYNTHESIZER ASSEMBLY.

3-11. Rf Translator. Frequency conversion of the 2 to 29.9999 MHz rf signal to the 500 kHz IF signal is performed in three mixing operations in RF Translator Subassembly A2A6A8, which is a part of Translator/Synthesizer Assembly A2A6 (Figure 3-2). Selection of the three specific mixing frequencies required for the conversion is accomplished by setting the front panel tuning controls. The injection frequency to the first (high frequency) mixer from 10 MHz/1 MHz Synthesizer Subassembly A2A6A13 through 10 MHz/1 MHz Filter Subassembly A2A6A14 ranges between 2.5 and 23.5 MHz. This results in a first IF of 19.5 to 20.5 MHz (lo-band) or 29.5 to 30.5 MHz (hi-band). The first IF is mixed with a 22.4 to 23.3 MHz (lo-band) or 32.4 to 33.3 MHz (hi-band) injection frequency from the 100 kHz Synthesizer Sub assembly A2A6A17. This produces a second IF, which will range between 2.8001 and 2.9000 MHz. The third (low frequency) mixer receives a 3.3001 to 3.4000 MHz injection signal from 10 kHz/1 kHz/100 Hz synthesizer A2A6A19. This produces the third IF of 500 kHz.

3-12. FREQUENCY GENERATOR. The stable 10 MHz output from Frequency Standard Assembly A2A5 is applied to Frequency Generator Subassembly A2A6A16. Here, dividers provide the reference frequencies used in the three synthesizer circuits of Translator/Synthesizer Assembly A2A6.

3-13. FREQUENCY SYNTHESIZER. The frequency synthesizer employs phase-locked loops, which compare the output frequencies with the reference frequency inputs. This ensures that the injection frequencies from the synthesizer subassemblies are accurate. The injection signals from the synthesizer subassemblies and the rf signal from the antenna are combined in RF Translator Subassembly A2A6A8. There, three mixing stages provide conversion of the rf signal to the 500 kHz IF. The stable 10 MHz output from Frequency Standard Assembly A2A5 is applied to Frequency Generator Subassembly A2A6-A16. Here, dividers provide the reference frequencies used in the three synthesizer circuits of Translator/Synthesizer Assembly A2A6.

3-14. The injection frequencies used in the first frequency conversion in the mixer circuits are generated in 10 MHz/1 MHz Synthesizer Subassembly A2A6A13. The injection frequency is produced by a voltage controlled oscillator (VCO) in A2A6A13. The VCO is phase-locked to the 500 kHz reference signal from Frequency Generator A2-A6A16. Programmable counters and frequency dividers in the A2A6A13 synthesizer subassembly establish the VCO frequency in response to the setting of the front panel 10 MHz and 1 MHz controls. Any one of seventeen possible injection frequencies, ranging from 2.5 to 23.5 MHz, is then applied to the first (high frequency) mixer in RF Translator Subassembly A2A6A8.

3-15. The injection frequencies used in the second frequency conversion are generated in

100 kHz Synthesizer Subassembly A2A6A17. The frequency at the output of A2A6A17 is between 22.4 and 23.3 MHz for lo-band operation, or between 32.4 and 33.3 MHz in hi-band. The front panel 100 kHz control establishes the output frequency of the VCO, which is phase-locked to the 100 kHz reference signal from Frequency Generator A2A6A16.

3-16. The 10 kHz/1 kHz/100 Hz Synthesizer Subassemblies A2A6A19 and A2A6A20 generate the injection frequencies used in the third frequency conversion. Any one of 1000 possible injection frequencies spaced at 100 Hz intervals between 3.3001 MHz and 3.4000 MHz is produced in response to the settings of the front panel 10 kHz, 1 kHz and Hz controls. The injection frequency is applied to the third mixer in RF Translator Assembly A2A6A8. Power Supply Subassembly A2A6A15 converts +20 V from voltage regulator A2U1 to the +5 V used in the subassemblies of Translator/Synthesizer Assembly A2A6.

3-17. MODE SELECTOR ASSEMBLY. The 500 kHz output of the Translator/Synthesizer Assembly A2A6 (Figure 3-1) is applied to Mode Selector Assembly A2A1. The operation of the receiver is identical in all modes. However, the main signal flow path varies according to the selected operating mode. The Mode Gate Subassembly A2A1A1 responds to gating control voltages and routes the IF signal through the appropriate LSB, USB, or AM filters to either or both of the IF/Audio Amplifier Assemblies A2A2 and A2A3. In the USB, RATT, AM and CW modes A2A2 is used, in LSB mode A2A3 is used, and in the ISB mode both the IF/audio amplifiers A2A2 and A2A3 are used.

3-18. IF/AUDIO AMPLIFIER ASSEMBLIES. Each IF/audio amplifier (Figure 3-1) extracts the audio information from its incoming IF signal. This information is applied to a phone jack on the front panel (phone USB or phone LSB) and to an output connector at the rear of the receiver case. In USB, RATT, LSB and ISB modes of operation, the intelligence is demodulated in a balanced product detector. Carrier reinsertion in these modes is provided by a 500 kHz signal obtained from Frequency Standard Assembly A2A5 via 500 kHz Gate Subassembly A2A1A2 of Mode Selector Assembly A2A1. In the AM mode demodulation is accomplished by a diode (AM) detector. For CW signals an adjustable beat frequency oscillator (BFO) signal from BFO Subassembly A2A1A3 is applied to the AM detector. An AGC feedback voltage is developed in the IF/audio amplifiers for use in the IF amplifiers and in the rf amplifier. If desired, the AGC function may be disabled and the gain of the rf and IF amplifiers manually controlled from the front panel.

3-19. CONTROL ASSEMBLY. The Control Assembly A2A13 uses 134 Vac and 37.5 Vac inputs from transformer A2T1 to produce +110V and -30V operating voltages for the receiver. (The +28V operating voltage is derived from bridge rectifier A2CR9 on the chassis. Regulated +20V is generated from the +28V supply through voltage regulator A2U1. The 6.3 Vac for the vacuum tube filaments is provided directly from transformer A2T1). Control of the +110V and +28V supplies during tuning is provided by the tune relay A2A13K1. In addition, band IF and filter selection is switched via the hi-lo filter relay A2A13K2.

3-20. MAJOR FUNCTIONAL DESCRIPTION.

3-21. GENERAL. During operation, Radio Receiver R-1051H/URR performs the 11 major functions listed below.

a. Rf amplification, selection, tuning and overload protection.
b. Rf-to-IF conversion.
c. IF amplification and control.
d. 500 kHz gating.
e. Beat frequency oscillation.
f. Automatic gain control.
g. Audio amplification.
h. Standard frequency generation and distribution.
i. Frequency synthesis.
j. Power distribution.
k. Control.

Descriptions of the first nine major functions are based on the signal flow diagrams in chapter 5. Circuits in the main signal flow path are discussed first, followed by discus

sions of the other assemblies involved with frequency synthesis and standard frequency generation. Power distribution is discussed with reference to the power distribution diagrams in chapter 5 for the primary ac power and for each of the dc voltages in the receiver. The control function is described with reference to the tuning control diagram and applicable schematic diagram in chapter 5.

3-22. RF AMPLIFICATION, SELECTION, TUNING AND OVERLOAD PROTECTION (Figure 5-1). The rf amplification, selection, tuning and overload protection functions are performed by Low Pass Filter A2FL3, Antenna Assembly A2A9, RF Amplifier Assembly A2A4 and 20 and 30 MHz Filter Assembly A2A10. The rf input signals from the antenna are processed through these four assemblies so that only the desired 2.0 to 29.9999 MHz signals are applied to Translator/Synthesizer Assembly A2A6.

3-23. The input rf signals are attenuated in Antenna Overload Assembly A2A9 whenever the receiver is deenergized, is tuned to a new MHz band, or whenever incoming rf exceeds a safe, predetermined level. When the rf signal exceeds the predetermined safe level, the setting of the front panel MHz controls is changed, or the equipment is deenergized, the base of A2A9Q2 is effectively grounded. This ground cuts off the relay driver A2A9Q2 and deenergizes antenna overload relay A2A9K1. The contacts of A2A9K1 open and A2A9R10 is placed in series and attenuates incoming signals 40 dB and prevents damage to the rf input stage.

3-24. RF AMPLIFICATION (Figure 5-1). The 2.0 to 29.9999 MHz rf signal from the receiving antenna is received by RF Amplifier Assembly A2A4 at A2A4P2A3. The rf signal is amplified in two vacuum-tube stages. The resulting rf output level is suitable for conversion to IF by translator subassembly A2A6A8. Interstage tuning networks for the frequency in use are selected by setting the front panel frequency controls.

3-25. The rf signal is applied from connector A2A4P2A3 through contacts B2 and B3 of TR relay A2A4A38K1 to contact E1-B located on a fixed stator strip. Here it is applied to one of 28 interstage coupling assemblies, A2A4A2 through A29, mounted on a turret.

3-26. Each interstage coupling assembly is tuned to the center frequency of its 1 MHz bandpass. The 28 assemblies provide coverage of the entire 2.0 to 29.9999 MHz rf frequency range. Capacitors are mounted on a rotor within the turret. These are connected in parallel with transformers in the 1 MHz bandpass coupling assemblies. This allows tuning of the assemblies to specific frequencies within the 1 MHz bandpass.

3-27. TUNED CIRCUITS. Each of subassemblies A2A4A2 through A29 has a transformer T1 and capacitor C2. Capacitor C2 is connected in series with capacitors in rotor assemblies A2A4A30 and A2A4A31. The series combination is connected in parallel with T1. This constitutes the first tuned rf circuit. The second tuned circuit consists of transformer T2 and capacitor C3 within subassemblies A2A4A2 through A29. Capacitor C3 is connected in series with capacitors in rotor assemblies A2A4A32 and A2A4A33. The series combination is connected in parallel with T2. Capacitor A2A4C1 couples the rf signal to the grid of A2A4V1. Parasitic filter A2A4FL1 suppresses unwanted frequencies in the grid circuit. R-C network A2A4A1 provides for proper biasing of the amplifier A2A4V1 and A2A4V2 circuits and rf bypassing for the cathode resistors. A tuned circuit in the output of A2A4V1 consists of transformer T3 and capacitor C4 of subassemblies A2A4A2 through A29, in series with capacitors in rotor assemblies A2A4A34 and A2A4A35. The series capacitor combination is connected in parallel with T3. The amplified rf signal at the output of A2A4V1 is coupled through capacitor A2A4C5 and parasitic suppressor A2A4FL2 to the input of rf amplifier A2A4V2. The tuned output circuit of A2A4V2 consists of transformer T4 and capacitor C5 of subassemblies A2A4A2 through A29, in series with capacitors in rotor assemblies A2A4A36 and A2A4A37. The series capacitor combination is connected in parallel with T4. The amplified rf signal at the secondary of T4 appears at output connector A2A4P2A1. Here it is connected to the 20-30 MHz filter assembly A2A10.

3-28. RF AMPLIFIER GAIN CONTROL. The gain of rf amplifiers A2A4V1 and A2A4-V2 is controlled either manually or automatically by varying the grid bias on the tubes. When the MGC/AGC switch A2A4S3 is in MGC position, control is manual by rotation of GAIN control A2A14R3 (Figure 5-7). When the MGC/AGC switch A2A14S3 is in either SLOW or FAST position, the gain is controlled by the AGC circuits in IF/Audio Assemblies A2A2 and A2A3. See paragraph 3-60 for a discussion of AGC circuits.

3-29. TUNED CIRCUIT SELECTION (Figure 5-1). The turret-tuning assemblies of RF Amplifier Assembly A2A4 are selected in response to tuning-code signals received from Code Generator Assembly A2A7. Setting the front panel 10 MHz and 1 MHz controls to a desired frequency causes Code Generator Assembly A2A7 to provide a specific five-wire tuning code (combination of open and grounded lines) to turret decoder switch A2A4S1. Turret drive relay A2A4K1 then energizes and activates motor A2A4-B1. A2A4B1 rotates the turret and decoder switch wafers until the decoder reaches a position where its contacts reflect the complement of the code generator input. When this occurs, A2A4S1 is at a position that interrupts all ground paths to A2A4K1. Turret drive relay A2A4K1 then deenergizes, stopping motor A2A4B1. The turret is now positioned as required for the selected 10 MHz and 1 MHz control settings. The 100 kHz and 10 kHz rotor assemblies are selected by the 100 kHz and 10 kHz front panel controls through mechanical linkage.

3-30. FILTERING. The output signals from rf amplifier A2A4V2 are coupled through transformer T4 in megahertz turret A2A4A2 through A2A4A29 to output connector A2-A4P2 pin A1. The signals then pass to the 20 and 30 MHz Filter Assembly A2A10, where the signals are filtered to increase IF rejection of the receiver. When the receiver is tuned to a band designated LO (Table 3-1), the first IF frequency is at 20 MHz. The filter selected by diode switching in A2A10 will reject 20 ±0.4 MHz and pass all other frequencies. When the receiver is tuned to a band designated HI, the first IF is at 30 MHz and the filter selected will reject 30 ±0.4 MHz and pass all other frequencies.

3-31. RF-TO-IF CONVERSION (Figure 5-2). Conversion of the received radio frequency to the intermediate frequency takes place within RF Translator Subassembly A2-A6A8. This unit is part of Translator/Synthesizer Assembly A2A6. RF Translator Subassembly A2A6A8 receives the 2 to 30 MHz rf input from 20 - 30 MHz Filter Assembly A2A10 at A2A6P3A1. In A2A6A8 it is converted in three mixer stages to the 500 kHz IF signal. The output of A2A6A8 is applied to Mode Selector Assembly A2A1.

3-32. The injection (mixing) frequencies applied to the mixer stages are automatically selected. This is accomplished when the front panel tuning controls are set to the desired frequency. Generation of the injection frequencies is accomplished by three frequency synthesizers (Paragraph 3-81).

3-33. HIGH FREQUENCY MIXER. The signal from RF Amplifier Assembly A2A4 is received via 20 - 30 MHz Filter Assembly A2A10. It is applied across A2A6A8R52 and then to TR gating diode A2A6A8CR18. TR gating diode A2A6A8CR18 is forward biased by the +10V supply developed by R2-CR1 and the rf signal is inductively coupled through transformer A2A6A8T7 to pins 1 and 10 of high frequency mixer A2A6A8U3.

3-34. The high frequency mixer injection frequency, which is any one of 17 discrete frequencies between 2.5 and 23.5 MHz (Table 3-1), from 10 MHz/1 MHz Synthesizer Subassembly A2A6A13 is filtered through 10 MHz/1 MHz Filter Subassembly A2A6A14 and applied to pin 2 of high frequency mixer A2A6-A8U3. The specific high frequency mixer injection frequency is determined by the settings of the front panel 10 MHz and 1 MHz controls.

3-35. High frequency mixer A2A6A8U3 mixes the rf and injection frequencies. The combined signal is coupled through transformer A2A6A8T6, forward biased TR gating diode A2A6A8CR15 and capacitor A2A6A8-C48 for selection of 20 MHz or 30 MHz IF as determined by hi/lo filter relay A2A13K2.

3-36. When +20 V is applied to A2A6P1-20 from hi/lo filter relay A2A13K2, gating diodes A2A6A8CR12 and A2A6A8CR10 are

Table 3-1. Comprehensive Frequency Translation Chart

MHz CONTROL SETTINGS	HIGH FREQUENCY MIXER INJECTION SIGNAL (MHZ)		100 kHz CONTROL SETTING	MID-FREQUENCY MIXER INJECTION SIGNAL (MHz) IN 100 kHz STEPS		10 kHz CONTROL SETTING	LOW FREQUENCY MIXER INJECTION SIGNAL (MHz) IN 100 Hz STEPS
	LO-BAND	HI-BAND		LO-BAND	HI-BAND		
2	17.5		0	22.4	32.4	0	3.4000 to 3.3901
3	16.5		1	22.5	32.5	1	3.3900 to 3.3801
4	15.5		2	22.6	32.6	2	3.3800 to 3.3701
5	14.5		3	22.7	32.7	3	3.3700 to 3.3601
6		23.5	4	22.8	32.8	4	3.3600 to 3.3501
7	12.5		5	22.9	32.9	5	3.3500 to 3.3401
8	11.5		6	23.0	33.0	6	3.3400 to 3.3301
9		20.5	7	23.1	33.1	7	3.3300 to 3.3201
10		19.5	8	23.2	33.2	8	3.3200 to 3.3101
11	8.5		9	23.3	33.3	9	3.3100 to 3.3001
12	7.5						
13		16.5					
14	5.5						
15	4.5						
16	3.5						
17		12.5					
18		11.5					
19		10.5					
20		9.5					
21		8.5					
22	2.5						
23	3.5						
24		5.5					
25		4.5					
26		3.5					
27	7.5						
28	8.5						
29	9.5						

forward biased. The combined signal from the high frequency mixer A2A6A8U3 is applied to bandpass filter A2A6A8FL1 and only 20 MHz is passed through the filter. In this manner, the first IF is selected at 19.5 to 20.5 MHz (lo-band).

3-37. Similarly, when a ground is applied to A2A6P1-20 by hi/lo filter relay A2A13K2, gating diodes A2A6A8CR13 and A2A6A8-CR11 are forward biased applying the combined signal from high frequency mixer A2A6A8U3 to bandpass filter A2A6A8FL2. The first IF is then selected at 29.5 to 30.5 MHz (hi-band).

3-38. MID FREQUENCY MIXER. The first IF is coupled through A2A6A8C38, A2A6A8-C37, forward biased TR gating diode A2A6-A8CR9 and A2A6A8T5 to pins 1 and 10 of mid frequency mixer A2A6A8U2.

3-39. The mid frequency mixer injection frequency, 22.4 to 23.3 MHz (lo-band) or 32.4 to 33.3 MHz (hi-band), from 100 kHz Synthesizer Subassembly A2A6A17 is applied to pin 2 of mid frequency mixer A2A6A8U2. The specific injection frequency (Table 3-1) is determined by setting of the front panel 100 kHz control and the voltage from hi-lo filter relay A2A13K2.

3-40. The first IF and the injection frequency are subtractively mixed in mid frequency mixer A2A6A8U2. The combined signal is coupled through A2A6A8T4, forward biased TR gating diode A2A6A8CR6, A2A6-A8C25 and A2A6A8C24 and is applied to pin 3 of 2.85 MHz bandpass filter A2A6A8FL3.

3-41. The narrow bandpass of filter A2A6-A8FL3 rejects all frequencies except the desired second IF, which ranges from 2.8001 to 2.9 MHz.

3-42. LOW FREQUENCY MIXER. The second IF is coupled through A2A6A8C18, A2A6A8C20, forward biased TR gating diode A2A6A8CR4 and A2A6A8T2 to pins 1 and 10 of low frequency mixer A2A6A8U1.

3-43. The low frequency mixer injection frequency, 3.3001 to 3.4 MHz, from the 10 kHz/1 kHz/100 Hz Synthesizer Subassemblies A2A6A20 and A2A6A19 is applied to pin 2 of low frequency mixer A2A6A8U1. The specific low frequency mixer injection frequency is determined by the positions of the front panel 10 kHz and 1 kHz controls, the Hz switch and the Hz vernier control.

3-44. The second IF and the injection frequency are subtractively mixed in low frequency mixer A2A6A8U1. The combined signal is coupled through A2A6A8T3, forward biased TR gating diode A2A6A8CR3, A2A6-A8C13, A2A6A8L2 and A2A6A8C10 to the base of amplifier A2A6A8Q1. Inductor A2A6A8L2 and capacitor A2A6A8C12 reject the sum frequency output of low frequency mixer A2A6A8U1, coupling only the 500 kHz difference frequency to the base of A2A6-A8Q1.

3-45. The collector circuit of 500 kHz amplifier A2A6A8Q1 is tuned to 500 kHz via transformer A2A6A8T1, the output of, which becomes the 500 kHz third IF at synthesizer output connector A2A6P2A1.

3-46. IF AMPLIFICATION AND CONTROL (Figure 5-3). The IF amplification and control function consists of mode gating, IF amplification and demodulation. The function is performed primarily in Mode Gates Subassembly A2A1A1 and in IF/Audio Amplifier Assemblies A2A2 and A2A3. The 500 kHz IF signal from Translator/Synthesizer Assembly A2A6 is gated according to the receiver operating mode and is amplified and demodulated before being sent to the audio amplification circuits (Paragraph 3-63).

3-47. The IF amplification is controlled by AGC voltages (Paragraph 3-60). The demodulation function uses a 500 kHz injection signal in all modes except AM and CW (Paragraph 3-54). A variable 500 kHz BFO signal is used in the CW mode and no reinsertion signal is required in the AM mode (Paragraph 3-56).

3-48. MODE GATING. The 500 kHz IF signal from Translator/Synthesizer Assembly A2A6 is supplied to Mode Gates Subassembly A2A1A1, which is part of Mode Selector Assembly A2A1. The signal is applied to emitter follower A2A1A1Q1 whose output is applied to three buffer amplifiers A2A1A1Q2

through A2A1A1Q4. In the USB, RATT and ISB modes, buffer amplifier A2A1A1Q2 is enabled by +20 V to its emitter via contacts on the front panel Mode Selector Switch A2A14S2. The output of A2A1A1Q2 is applied to USB filter A2A1FL1. The output of USB filter A2A1FL1 is applied to a second buffer amplifier A2A1A1Q5 whose collector output is then applied to IF/Audio Amplifier Assembly A2A2.

3-49. In the AM and CW modes, buffer amplifier A2A1A1Q3 is enabled by +20 V applied to its emitter and diode switch A2A1A1CR3 is enabled by +20 V to its anode by control voltages through the MODE SELECTOR Switch A2A14S2. Thus, the output of AM filter A2A1FL2 is gated to buffer amplifier A2A1A1Q6 and then applied to IF/Audio Amplifier Assembly A2A2.

3-50. In the LSB mode, the output from LSB filter A2A1FL3 is coupled directly to emitter follower A2A1A1Q7, without gating. The output of this filter is used only when information is being carried in the LSB and ISB modes since otherwise, circuits in the lower sideband IF/Audio Amplifier Assembly A2A3 (which receives the output from emitter follower A2A1A1Q7) are disabled (Paragraph 3-53). When operating in the LSB mode, buffer amplifier A2A1A1Q4 is enabled by +20 V applied to its emitter, while amplifiers A2A1A1Q2, Q3 are disabled and diode gate A2A1A1CR3 is reverse biased.

3-51. IF AMPLIFICATION. In the ISB mode of operation, IF signals are presented to both IF/Audio Amplifier Assemblies A2A2 and A2A3. Since the two assemblies are identical, the following description of the IF amplifier stages of A2A2 applies to both assemblies.

3-52. Amplification of the IF signal is accomplished in transformer coupled stages A2A2A2Q1 and A2A2A2Q4 through A2A2-A2Q6. Automatic or manual gain control circuitry (Paragraph 3-60) controls the IF level from amplifier A2A2A2Q1 to provide a constant input to amplifier A2A2A2Q4 over a wide range of input IF signal variations. The gain of IF amplifier A2A2A2Q6 may be set by means of IF GAIN potentiometer A2A2-A2R22 to produce the desired signal level for the balanced output from transformer A2-A2A2T4. In the AM and CW modes, the output of A2A2A2T4 is detected by the AM detector A2A2A3CR2 (via amplifier A2A2-A3Q3) in assembly A2A2A3. In all other modes of operation, the output of A2A2A2T4 is detected by the product detector A2A2-A3Q1 and A2A2A3Q2.

3-53. Operating voltages (+20 V not shown) for amplifiers A2A2A2Q1 through Q6 are selectively applied to IF/Audio Amplifier Assemblies A2A2 and A2A3 through contacts of the front panel MODE SELECTOR Switch A2A14S2. Thus, in the USB, RATT, AM and CW modes, only assembly A2A2 is operational, while in the LSB mode, only assembly A2A3 is operational. In the ISB mode, both assemblies receive +20 V and are operational.

3-54. DEMODULATION. In the USB, LSB, ISB and RATT modes of operation, the balanced IF output from the IF amplifier stage is demodulated in the product detector portion of subassemblies A2A2A3 or A2A3A3. The product detector transistors A2A2A3Q1 and A2A2A3Q2, connected in a balanced mixer configuration, receive the 180 degree out-of-phase IF sideband signals at their bases and a 500 kHz injection signal from Mode Selector Assembly A2A1 at their emitters (Paragraph 3-57). As a result of the subtractive mixing, cancelling and filtering action of these two transistors and their associated passive components, the audio intelligence is derived from the IF sideband signal and appears across the secondary of transformer A2A2- A3T1 or A2A3A3T1.

3-55. Selection of the appropriate product detector(s) is achieved by applying operating voltages and the 500 kHz injection only during the proper modes of operation. Thus, operating voltages are applied to the product detector in IF/Audio Amplifier Assembly A2A2 through contacts of the MODE SELECTOR Switch A2A14S2 only during the USB, ISB and RATT modes, while operating voltages are supplied to the product detector in IF/Audio Amplifier A2A3 only in the LSB and ISB modes.

3-56. In the AM and CW modes of operation, only one of the two IF outputs from IF transformer A2A2A2T4 is applied to the AM

detector A2A2A3CR2 (IF/Audio Amplifier Assembly A2A3 is inoperative in these modes). The modulated 500 kHz IF signal undergoes one further stage of amplification in transistor A2A2A3Q3 and is applied across the tuned circuit consisting of inductor A2A2A3L1 and capacitor A2A2A3C6. The resultant output of the tuned circuit is detected in diode A2A2A3CR2, which extracts the audio signal from the IF signal. In the CW mode of operation, a variable BFO signal is applied to the tuned circuit A2A2A3L1, A2A2A3C6, the variable BFO and 500 kHz IF carrier signals are mixed by diode A2A2A3-CR2. Capacitor A2A2A3C7 removes the undesired intermediate frequencies and the variable difference frequency is applied to the audio amplifier circuitry (Paragraph 3-63). Operating voltage for amplifier A2A2-A3Q3 is provided to this stage through contacts of the MODE SELECTOR Switch A2A14S2 only during AM or CW modes. In all other modes, the circuit is inoperative.

3-57. 500 kHz GATING (Figure 5-4). Gating of the 500 kHz injection signal used in the product detectors (Paragraph 3-54) is accomplished in the 500 kHz Gate Subassembly A2A1A2, which is part of Mode Selector Assembly A2A1. A 500 kHz signal from Frequency Standard Assembly A2A5 (Paragraph 3-71) is applied to diode switch A2A1A2-CR1. This diode is forward biased only during the LSB, USB, ISB and RATT modes of operation, when +20 V is applied to the anode through contacts of the front panel MODE SELECTOR Switch A2A14S2. Two outputs are provided, one to IF/Audio Amplifier Assembly A2A2, and the other to IF/Audio Amplifier Assembly A2A3, where they are used in the detection of IF sideband signals (Paragraph 3-54).

3-58. BEAT FREQUENCY OSCILLATION (Figure 5-8). The beat frequency oscillation (BFO) function is provided by the BFO and Amplifier Subassembly A2A1A3, which is part of the Mode Selector Assembly A2A1. This subassembly is activated by +20 V from the MODE SELECTOR Switch A2A14S2 when this switch is set to CW position. In all other modes of operation, the +20 V is not supplied to the BFO and amplifier and the subassembly is inoperative.

3-59. The BFO circuitry provides an adjustable range of signals about a center frequency of 500 kHz. Varactor diode A2A1-A3CR1 and inductor A2A1A3L1 form a portion of the frequency determining network for variable frequency oscillator A2A1A3-Q1. An adjustable dc control voltage, obtained from front panel BFO control A2A14-R6 is applied to vary the capacitance of A2-A1A3CR1 and establishes the output frequency of oscillator A2A1A3Q1. The nominal 500 kHz BFO signal is applied through buffer amplifiers A2A1A3Q2, Q3, to IF/-Audio Amplifier Assembly A2A2 for use in the detection of CW signals (Paragraph 3-56).

3-60. AUTOMATIC GAIN CONTROL (Figure 5-7). Automatic gain control (AGC) voltage is provided by IF/Audio Amplifier Assembly A2A2 in the USB, RATT, AM and CW modes of operation, by IF/Audio Amplifier Assembly A2A3 in the LSB mode and by both assemblies in the ISB mode. The AGC voltage is supplied to dc amplifier A2A2A2Q2 or A2A3A2Q2 within the IF/Audio amplifiers (Paragraph 3-52) and is also supplied to RF Amplifier Assembly A2A4 (Paragraph 3-28). Since the circuitry of IF/Audio Amplifier Assemblies A2A2 and A2A3 are identical only A2A2 is discussed.

3-61. A sample of the 500 kHz IF signal is taken from the secondary of IF transformer A2A2A2T2 and applied to IF amplifier A2A2A1Q8. The gain of this stage is varied by AGC ADJ control A2A2A1R25. Front panel MGC/AGC switch A2A14S3 provides for either FAST or SLOW response in the automatic gain control function, or for manual rf and IF gain control in the MGC position. Capacitor A2A2A1C12 and associated components control the timing of the operation of AGC. Switch A2A2A1Q10 and preamplifier A2A2A1Q11, activated as a function of the setting of front panel MGC/AGC switch A2A14S3, provide for switching A2A2A1C12 in and out of the network for SLOW and FAST AGC respectively. When A2A14S3 is in the FAST or SLOW position, A2A2A1Q12 and A2A2A1Q13 will switch IF amplifier A2A2A1Q7 on, applying the 500 kHz IF signal to transformer A2A2A1T1. The greater amplitude signal is rectified by detector A2A2-A1CR5 to provide a charging potential for

capacitor A2A2A1C5, while the smaller signal is rectified by detector A2A2A1CR4 to provide a charging potential for capacitor A2A2A1C3. The potentials on A2A2A1C5 and A2A2A1C3 provide base bias and emitter bias, respectively, for coincidence detector A2A2A1Q6. A relatively steady rf signal will result in coincidence detector A2A2A1Q6 being cut off.

3-62. Coincidence detector A2A2A1Q6 will forward bias when the rf input level falls sufficiently. Capacitor A2A2A1C3 now discharges through A2A2A1Q6 and resistor A2A2A1R13. As A2A2A1Q6 conducts, base current to emitter follower A2A2A1Q4 decreases and the voltage applied to the base of dc amplifier A2A2A1Q3 also decreases, decreasing the voltage applied to the base of A2A2A2Q2. In turn, the conduction of A2A2A2Q2 decreases as A2A2A2Q3 conducts less, raising potential at its collector and forward biasing amplifier A2A2A2Q1. As A2A2A2Q2 conducts less, less loading is placed on the output of A2A2A2T1, increasing the IF level applied to amplifiers A2A2-A2Q4 and A2A2A2Q5. The reverse effect results when the rf level increases sufficiently at the output of A2A2A1T1, the result being that the negative feedback signal applied to the emitter of A2A2A2Q1 is changed so as to reduce the IF level applied to A2A2A2Q4-Q5. This circuit action also increases or decreases the base voltage on dc amplifier A2A2A1Q1 in step with an increase or decrease in IF signal level to A2A2A2Q4-Q5. An increase in A2A2A1Q1 base voltage will cause its collector voltage to go more negative and vice versa. The collector voltage of A2A2A1Q1, in turn, is fed through diode A2A2A1CR1 to the RF Amplifier A2A4, where it changes grid bias voltage on the two electron tube stages to either increase or decrease rf amplifier gain to compensate for the change in IF signal level at A2A2A1T1.

3-63. AUDIO AMPLIFICATION (Figures 5-5 and 5-6). Audio amplification of the intelligence obtained from the demodulators (Paragraph 3-54) takes place in IF/Audio Amplifier A2A2 in the USB, RATT, AM, CW and ISB modes of operation and in IF/Audio Amplifier A2A3 in the LSB and ISB modes. In any operating mode the amplified 300 to 3500 Hz audio signal is applied to a front panel jack for monitoring by means of a headset and through Filter Box Assembly A1A1, to rear-panel output connectors for use with auxilliary audio equipment. The audio amplification signal flow is discussed separately below for the two IF/audio amplifiers and is depicted on two separate signal flow diagrams (Figures 5-5 and 5-6). Note that the ISB mode is processed in both assemblies and is discussed and depicted twice.

3-64. USB, RATT, AM, CW AND ISB MODES (Figure 5-5). In the USB and RATT modes of operation and for the upper sideband signal in the ISB mode, the audio output from the product detector A2A2A3Q1 and Q2 is applied through transformer A2A2A3T1 to the front panel USB LINE LEVEL control A2-A14R2. In the AM and CW modes, the audio output from the AM detector A2A2A3CR2 is applied through audio amplifiers A2A2A1Q9 and A2A2A1Q14 to the USB LINE LEVEL control A2A14R2.

3-65. From the USB LINE LEVEL control, the audio is fed to the IF/Audio Amplifier Assembly A2A2 and applied to audio amplifier A2A2A2Q7. The output signal from A2A2A2Q8 is applied to transformer A2A2-A2T5, which provides an audio signal to the input of push-pull amplifier stage A2A2A2-Q9/Q10. The amplified audio signal from A2A2A2Q9/10 is then applied to output transformer A2A2T1.

3-66. Transformer A2A2T1 provides separate audio signal outputs to allow for both local and remote operation. One output from A2A2T1 is a balanced, 600 ohm, two-wire output connected through Filter Box Assembly A1A1 to rear panel output connectors. These remote audio outputs are connected to external equipment as required. The remote audio signal level may be monitored on AUDIO LEVEL meter A2A14M1 by placing the front panel AUDIO LEVEL switch A2A14-A12S1 in USB and the required range position. The AUDIO LEVEL meter driver circuit functions essentially as follows. The audio level output voltage from the IF/Audio Amplifier (USB: A2XA2P1-12, -14, or LSB: A2XA3P1-12, -14) is connected to the meter driver circuit by setting switch A2A14A12-S1. Thus, equal magnitude and opposite polarity voltages are applied either to op amp

inputs A2A14A12U1B-2, -3 (LSB) position or A2A14A12U1C-5, -6 (USB) position. The various positions of AUDIO LEVEL switch A2A14A12S1 serve to connect resistance divider networks as required to shift the relative value of the zero point on the meter dial to accommodate a given amplitude audio level input signal at a convenient mid-scale reading. Op-amp A2A14A12U1C together with A2A14A12U1A provides the necessary levels of input voltage required to the diode bridge A2A14A12CR1-CR4 to produce proportional dc output voltage for a final reading in dBm on A2A14M1. Operation in the LSB position parallels the operation described for USB. The second output from A2A2T1 is an unbalanced output connected through PHONE USB VOL control A2A14R5 to the front panel PHONE USB jack A2A14-J2. Rotation of A2A14R2 permits the local operator to adjust the audio signal level applied through PHONE USB jack A2A14J2 to the headset. A portion of the unbalanced audio signal output of A2A2T1 is also applied as negative feedback to audio amplifier A2A2-A2Q7 to reduce distortion in the A2A2A2 amplifier stages.

3-67. Operating voltages for the audio amplifier A2A2A1Q9, A2A2A1Q14, A2A2A2Q7, emitter follower A2A2A2Q8 and push-pull amplifiers A2A2A2Q9/Q10 are obtained from the front panel MODE SELECTOR Switch A2A14S2 only when the stage is actually required.

3-68. LSB AND ISB MODES (Figure 5-6). In the LSB mode and for the lower sideband signal in the ISB mode, the audio output from the product detector A2A3A3Q1 and Q2 is applied through transformer A2A3A3T1 to the front panel LSB LINE LEVEL control A2A14R1.

3-69. The signal flow of the audio signal from LSB LINE LEVEL control A2A14R1 through the audio amplifier portion of subassembly A2A3A2 is identical to the USB signal flow previously described in paragraph 3-65.

3-70. One output from the secondary of transformer A2A3T1 is a balanced, 600-ohm, two-wire output applied to rear panel connectors for operation of external equipment. The audio level of this output signal may be monitored on AUDIO LEVEL meter A2A14M1 by placing the front panel AUDIO LEVEL switch A2A14A12S1 in the LSB position and selecting the appropriate meter range. The second output is an unbalanced output connected to PHONE LSB VOL control A2A14R4. Rotation of A2A14R4 permits the adjustment of the audio signal level applied through PHONE LSB jack A2A14J1 to the local headset.

3-71. STANDARD FREQUENCY GENERATION AND DISTRIBUTION (Figure 5-9). Frequency Standard Assembly A2A5 provides accurate reference frequencies for use in Radio Receiver R-1051H/URR. The frequencies are produced either from a 5 MHz external input provided by a frequency standard at the installation site, or from an internal oven-controlled 5 MHz oscillator circuit. The internal 5 MHz oscillator circuit is comprised of crystal-controlled oscillator A2A5A1Q1 and associated circuitry. Precise adjustment of the oscillator output frequency is provided by A2A5A1C2 and A2A5A1C3. The 5 MHz reference frequency is divided and multiplied in Divider/Amplifier Subassembly A2A5A2 to produce the highly stable output frequencies referenced in paragraph 3-8.

3-72. REFERENCE CONTROL. Subassembly A2A5A4 monitors the 5 MHz signal from oscillator A2A5A1 and the 5 MHz input from the external frequency standard. If the level of the external standard falls below a prescribed point, the Reference Control A2A5-A4 will automatically switch to the internal 5 MHz source.

3-73. REFERENCE SOURCE SELECTION. Manual reference source selection is provided by a three-position 5 MHz OSC SOURCE switch A2A5A2S1, used to select one of two external 5 MHz source modes, or the internal 5 MHz source.

3-74. When the 5 MHz OSC SOURCE switch is in EXT NORMAL position, the external standard provides the 5 MHz reference signal. At this time the Oven Subassembly A2A5A3 is off. When the 5 MHz OSC SOURCE switch is in EXT (OVEN STBY) position, the external source supplies the reference signal and the oven heater is enabled

and maintains a constant temperature. When the 5 MHz OSC SOURCE switch is in INT/-COMP position, the oven-stabilized crystal oscillator in A2A5A1 provides the reference signal.

3-75. Automatic reference source selection is provided by the 5 MHz Reference Control Subassembly A2A5A4 containing logic circuits, which evaluate the incoming external 5 MHz reference signal. If the amplitude is too low, the logic circuits select the internally generated 5 MHz signal. Specifically when the external reference falls below approximately 0.25 volts, the output from detector A2A5A4CR6 falls low enough to turn off emitter follower A2A5A4Q2. This results in logic lows at A2A5A4U1A-1 and A2A5A4U1B-6, and logic highs at A2A5-A4U1A-3 and A2A5A4U2B-5. A2A5A4U1A-2, A2A5A4U2B-5 and A2A5A4U2D-13 are wired high in the EXT NORMAL and EXT (OVEN STBY) positions of A2A5A2S1. The result is that the internal reference from A2A5A1Q3 is routed, via A2A5A4U2A through A2A5A4U2B and A2A5A4U2C, to the Divider/Amplifier Assembly A2A5A2 for use in the equipment. The external reference line is blocked at A2A5A4U1C.

3-76. When the 5 MHz OSC SOURCE switch A2A5A2S1 is in the EXT NORMAL position, pull-up resistor A2A5A4R10 provides a logic high at NAND gates A2A5A4-U1A-2 and A2A5A4U2D-13. The output of detector A2A5A4CR6 also applies a logic high via emitter follower A2A5A4Q2 to A2A5A4U1A-1. This results in logic lows at A2A5A4U1B pins 4 and 5 and A2A5A4U2B-5 and logic high at A2A5A4U2D-12 and A2A5-A4U1C-9. As a result, the internal 5 MHz reference is blocked by A2A5A4U2B and the external 5 MHz reference is permitted to pass through isolation gate A2A5A4U1C and NOR gate A2A5A4U2C to Divider/Amplifier Assembly A2A5A2. When the 5 MHz OSC SOURCE switch is in EXT (OVEN STBY) position, the external source supplies the reference signal with all gate logic the same as for EXT NORMAL. The oven heater is enabled and maintains a constant oven temperature. When the 5 MHz OSC SOURCE switch is in INT/COMP position, the crystal oscillator in A2A5A1 provides the reference signal and the oven maintains its constant temperature. Amplifier A2A5A1Q1, crystal A2A5-A1Y1 and associated components form a modified Pierce oscillator, which provides the internal 5 MHz standard frequency. This signal is amplified by A2A5A1Q2, A2A5A1Q3 and coupled to A2A5A4U2A where it is inverted and fed to NAND gate input A2A5-A4U2B-4. In INT/COMP position of 5 MHz OSC SOURCE switch A2A5A2S1, NAND gate A2A5A4U2D-13 is held low, as is NAND gate A2A5A4U1A-2. This results in logic highs at A2A5A4U1B pins 4 and 5 and A2A5A4U2B-5 and logic low at A2A5A4U2D-12 and A2A5-A4U1C-9. As a result, the external 5 MHz reference is blocked by A2A5A4U1C and the steady state logic high output of A2A5A4-U1C is applied to A2A5A4U2C-9. With logic highs at both A2A5A4U2B-5 and A2A5A4-U2C-9, the internal 5 MHz reference is permitted to pass through A2A5A4U2B and A2A5A4U2C to Divider/Amplifier A2A5A2.

3-77. OVEN TEMPERATURE CONTROL SENSOR. Changes in oven temperature are sensed by A2A5A3R2 and applied as an input to the differential amplifier consisting of A2A5A1Q4 and A2A5A1Q5. When oven temperature tends to increase, the resistance of A2A5A3R2 also tends to increase changing the balance of sensor bridge A2A5A1R13 through A2A5A1R16 and the corresponding input to the differential amplifier circuit. A2A5A1Q6 then provides less base current to A2A5A1Q7 decreasing conduction in A2A5-A4Q5 and the current through the heater A2A5A3R1, resulting in a tendency to oppose an increase in the crystal oven operating temperature. The reverse effect stabilizes the oven against a tendency to decrease in temperature.

3-78. FREQUENCY DIVIDER. Divider/Amplifier Subassembly A2A5A2 contains divider circuits and multiplier circuits. The 5 MHz input at A2A5A2E9 is amplified by A2-A5A2Q1 and A2A5A2Q6. The output from A2A5A2Q1 is coupled to divide-by-five oscillator A2A5A2Q2, which is tuned to 1 MHz. The A2A5A2Q2 output is coupled to divide-by-two oscillator A2A5A2Q4 and to 1 MHz amplifier A2A5A2Q3. The 1 MHz output of A2A5A2Q3 is coupled to A2A5P1A3 via the parallel resonant circuit combination of A2A5A2C13 and A2A5A2T1. The output of A2A5A2Q4 is amplified in 500 kHz

amplifier A2A5A2Q5. It is coupled to A2A5P1A1 and A2A5P1A2 via the parallel resonant circuit formed by A2A5A2C22 and A2A5A2T2.

3-79. FREQUENCY MULTIPLIER. The 5 MHz output of A2A5A2Q6 is coupled to 10 MHz amplifier A2A5A2Q7. A2A5A2Q7 is tuned to the second harmonic of the 5 MHz input by capacitor A2A5A2C31. The 10 MHz output of A2A5A2Q7 is amplified by A2A5A2Q8 and appears at the primary of transformer A2A5A2T3, which is part of a parallel resonant circuit tuned by trimmer A2A5A2C33. The 10 MHz output from A2A5A2T3 appears at A2A5P1A5. The output from A2A5A2Q6 is also applied to 5 MHz amplifier A2A5A2Q9. Capacitor A2A5A2C38 is adjusted to provide the proper 5 MHz output at A2A5P1A6.

3-80. COMPARATOR CIRCUIT. Setting OSC SOURCE switch A2A5A2S1 in the INT/COMP position grounds one input to each of NAND gates A2A5A4U1A and A2A5A4U2D. This action results in a visual comparison of the internally generated 5 MHz reference and the external 5 MHz input. NAND gates A2A5A4U1A and A2A5A4U2D cause the internal 5 MHz to be present at NOR gate A2A5A4U2C and the external input to be blocked, as explained in paragraph 3-76. Both the internal and external signals are present at the input to phase detector A2A5A4U1D pins 12 and 13 respectively. The output of A2A5A4U1D is a voltage which cycles between essentially zero and +5V at a frequency equal to the difference in frequency between the two reference oscillators. The voltage at the junction of A2A5A2R52 and A2A5A2R56 is +5V when no current flows in comparator lamp A2A5A2DS1. When the voltage at A2A5A4U1D-11 is +5V, no current flows in A2A5A2DS1 and the lamp does not illuminate. When the voltage at A2A5A4U1D-11 cycles to zero, current flows in A2A5A2DS1 and the lamp illuminates. The rate at which the lamp cycles is equal to the frequency difference between the internal and external reference oscillators and permits an accurate adjustment of the internal reference oscillator (A2A5A1Q1) frequency by adjusting tuning capacitors A2A5A1C2 and A2A5A1C3.

3-81. FREQUENCY SYNTHESIS (Figure 3-2). Injection frequencies for the three frequency mixers of RF Translator Subassembly A2A6A8 are generated within the following subassemblies of Translator/Synthesizer Assembly A2A6:

a. 10 MHz/1 MHz Synthesizer A2A6A13 and Filter A2A6A14
b. 100 kHz Synthesizer A2A6A17
c. 10 kHz/1 kHz/100 Hz Synthesizers A2A6A19 and A2A6A20.

The injection frequencies are developed using reference frequencies from Frequency Generator Subassembly A2A6A16. The reference frequencies are locked to the 10 MHz output of Frequency Standard Assembly A2A5.

3-82. Frequency control is provided for the 10 MHz/1 MHz synthesizer by controls on the front panel, which position Code Generator Assembly A2A7. The 100 kHz, 10 kHz and 1 kHz front panel controls are chain-drives to position coding switches A2A6S1 through A2A6S3. The 100 Hz steps are set by front panel Hz switch A2A14A11S1 or Hz vernier control A2A14A11R1.

3-83. Each of the three synthesizers employs a phase-locked loop circuit to ensure that the output injection frequencies are correct. In the case of the 10 kHz/1 kHz/100 Hz unit, the output from the voltage controlled oscillator (VCO) on the A2A6A19 subassembly is applied to a programmable frequency divider. The divider, located on subassembly A2A6A20, provides one input to a phase detector. A second phase detector input, a stable 1 kHz reference, is provided by Frequency Generator A2A6A16. The output frequency of the programmable frequency divider is determined by codes set in Hz switch A2A14A11S1, 1 kHz switch A2A6S1 and 10 kHz switch A2A6S2. If the two inputs to the phase detector are not exactly the same frequency, a correction voltage is developed in the phase detector. This correction voltage is applied through a loop filter to the VCO. The VCO output frequency then changes to re-establish a 1 kHz input to the phase detector. The VCO is therefore locked to the 1 kHz standard frequency from

A2A6A16. The VCO output frequency of A2A6A19 is divided by ten and applied through a filter network as the injection signal to low frequency mixer A2A6A8U1.

3-84. Synthesizer circuits A2A6A17 and A2A6A13 differ slightly from the preceding example. All circuitry for the 100 kHz Synthesizer Subassembly A2A6A17 is located on one printed wiring board. The VCO output frequency is not divided prior to use in mid-frequency mixer A2A5A8U2. A hi-lo band control voltage from Code Generator Assembly A2A7 is applied to the frequency divider in A2A6A17 to determine the output injection signal frequency range. The 10 MHz/1 MHz synthesizer circuit A2A6A13 differs only in that the frequency divider is programmed by the five-line code output of Code Generator Assembly A2A7. The VCO output is filtered in the separate subassembly A2A6A14.

3-85. FREQUENCY GENERATOR (Figure 5-11). The 10 MHz output from Frequency Standard Assembly A2A5 appears at connector P1A1 of the Frequency Generator Subassembly A2A6A16. It is applied to a two-stage amplifier consisting of A2A6A16Q1, A2A6A16Q2 and associated components. The amplified 10 MHz signal is shifted to the proper logic level by level shifter A2A6A16-U1A. Buffer stages A2A6A16U1B and A2-A6A16U1F isolate the output of A2A6A16-U1A from the succeeding divider circuit. The 10 MHz logic level signal then appears at the input of decade divider A2A6A16U2. Divider A2A6A16U2B applies a 100 kHz signal output to binary/decade divider A2A6A16-U3. The binary division output from pin 13 of A2A6A16U2B is buffered by U1C then used as the 500 kHz reference signal in 10 MHz/1 MHz Synthesizer Subassembly A2A6-A13. The decade division output from pin 9 of A2A6A16U2B is buffered by U1D then used as the 100 kHz reference signal by the 100 kHz Synthesizer Subassembly A2A6A17. It is also applied to decade dividers A2A6-A16U3A and subsequently to A2A6A16U3B. The 1 kHz output of A2A6A16U3B is gated to connector A2A6A16P1A3 for use in 10 kHz/1 kHz/100 Hz Synthesizer Subassembly A2A6-A19, when +4.3 V is present at A2A6A16P1-9 (non-vernier operation). This +4.3 V causes transistor switch A2A6A16Q3 to conduct and A2A6A16Q4 to cut off. The resulting positive voltage at the collector of A2A6A16Q4 is applied to pin 13 of NAND gate A2A6A16-U4B. This opens the gate and passes the 1 kHz reference signal through NOR gate A2A6A16U4D to connector A2A6A16P1A3. The positive collector voltage from A2A6-A16Q4 is also applied to inverter A2A6A16-U4A, which causes NAND gate A2A6A16U4C to close.

3-86. When switch A2A14A11S1 (Figure 5-32) is set in the V (vernier) position, the 1 kHz reference frequency output at A2A6-A16P1A3 varies such that a receiver tuning range of slightly more than 1 kHz is spanned as A2A14A11R1 (Figure 5-32) is rotated from stop to stop. Setting A2A14A11S1 in the vernier position removes +4.3 V from A2A6-A16P1-9. This turns off A2A6A16Q3 and turns on A2A6A16Q4, which closes gate A2A6A16U4B and opens A2A6A16U4C. Also, a variable dc voltage from A2A14A11R1 in the range of +2.5 to +3.7 V is applied to A2A6A16P1-3. This variable dc voltage is applied to dc amplifier A2A6A16U14, which supplies control line voltage to voltage controlled multivibrator A2A6A16U8. A2A6-A16U8 produces a 15 - 19 kHz square wave reference signal as A2A14A11R1 is varied. This signal is the reference input to phase detector A2A6A16U9 at pin 3. Phase detector A2A6A16U9 output signals from pins 5 and 10 are applied to loop filter consisting of A2A6A16U10, A2A6A16C25 and A2A6A16-R27. From A2A6A16U10 the signal is passed to voltage-controlled oscillator A2A6A16-U11, which produces a frequency of 9.981 to 9.985 MHz. Switch A2A6A16Q6 is turned on by the low from A2A6A16Q4 collector, turning on A2A6A16Q5 and VCO A2A6A16U11. Amplification is provided by A2A6A16Q5. The level of the signal is then raised by the level shifter consisting of A2A6A16U12A and A2A6A16U12B. From the output of A2A6-A16U12B the signal performs two functions: one is the output via A2A6A16U12D to be divided as the reference frequency output; the other is the output from A2A6A16U12C, which serves as feedback to the mixer A2A6A16U13. Mixer A2A6A16U13 receives two inputs. The first of these is the 10 MHz input signal from A2A6A16U1B, which is inverted by A2A6A16U1E. The second is the feedback from A2A6A16U12C. The output

of the mixer, which is the difference frequency between the two inputs, is applied to A2A6A16U9 pin 1 where its phase is compared to that of the reference signal at A2A6A16U9 pin 3. Thus, it can be seen that the circuit from A2A6A16U9 through A2A16U13 and back to A2A6A16U9 forms a phase-locked loop.

3-87. The signal output from A2A6A16-U12D enters the divide-by-9984 network comprised of A2A6A16U5 through A2AS6-A16U7. The output from A2A6A16U5 is coupled to NAND gate A2A6A16U4C. With logic low at the inputs of A2A6A16U4A and A2A6A16U4B, the signal from A2A6A16U4C is allowed to pass to NOR gate A2A6A16-U4D, while the 1 kHz reference signal from A2A6A16U3B is blocked by the "off" condition of A2A6A16U4B. At output frequencies of A2A6A16U8 between 15 kHz and 19 kHz the output at A2A6A16P1A3 will vary between approximately 1.0001 and 0.9997 kHz. This variation in the reference frequency supplied to 10 kHz/1 kHz/100 Hz synthesizer A2A6A19 will vary the injection frequency to mixer A2A6A8U1 in the translator (Figure 3-2) by approximately 1360 Hz.

3-88. 10 kHz/1 kHz/100 Hz SYNTHESIZER (Figure 5-13). The 10 kHz/1 kHz/100 Hz Synthesizer Subassemblies A2A6A20 and A2-A6A19 produce the 3.3001 to 3.4000 MHz injection signals used in the low-frequency mixing circuits of RF Translator Subassembly A2A6A8. An electronic, closed loop servo system compares the output signal with a 1 kHz input reference signal from Frequency Generator Subassembly A2A6A16. Any error detected is converted into a dc control voltage, which corrects the output frequency. When the phase difference between the output signal and the reference signal is constant, the loop is locked.

3-89. The injection signal is generated by a voltage controlled oscillator (VCO) assembly A2A6A19A1. The VCO is comprised of LC oscillator A2A6A19A1U1 and its associated components. A2A6A19A1L1, A2A6A19A1C2, A2A6A19A1C3 and varactor diode A2A6-A19A1CR1 form the tank circuit, which determines the oscillator output frequency. A2A6A19A1CR1 presents capacitance in the tank, whose value is determined by the amount of applied voltage. The VCO output frequency ranges from 33.001 to 34.000 MHz. The output of the VCO is applied to emitter follower A2A6A19A1Q1, which isolates LC oscillator A2A6A19A1U1 from the output circuitry loads. The output is then applied to inverters/level shifters A2A6A19-U2A through A2A6A19U2C, which provide the correct logic level input to pin 14 of decade divider A2A6A19U3. The 3.3001 to 3.4000 MHz output signal from pin 6 of A2A6A19U3 is inverted by A2A6A19U2D and applied to bandpass filter A2A6A19L6-L10 and A2A6A19C10-C12. The level of injection signal output is adjustable by means of variable resistor A2A6A19R16.

3-90. The output from LC oscillator A2A6A19A1U1 is also applied to the divider network subassembly A2A6A20, which divides the 33.001 to 34.000 MHz input by the factor necessary to produce a 1 kHz output. Prescaler A2A6A20U1A or U1B divides the 33.001 to 34.000 MHz VCO output by 11 when a logic low (0 to +0.4 V) from pins 4 and 12 of decade divider A2A6A20U2 is applied to pins 9 and 10 A2A6A20U1A (or pin 3 of U1B). With prescaler A2A6A20U1A selected, U1A continues to divide by eleven until divider A2A6A20U2 has counted down from a preset number to zero. At this time decade divider A2A6A20U2 applies a logic high (+2.4 to +5.0 V) to pins 9 and 10 of A2A6A20U1A. Prescaler A2A6A20U1A now divides by a factor of ten until cascade dividers A2A6A20U4, A2A6A20U9, A2A6-A20U10, A2A6A20U5 and A2A6A20U6 reach the all-zero state. The counting cycle is now complete and the dividers are reset in preparation for the next cycle. The purpose of cascaded dividers A2A6A20U4, A2A6A20U9, A2A6A20U10, A2A6A20U5 and A2A6A20U6 is to perform the required division to synthesize the indicated mixing frequency from the 3.399 MHz output of prescaler A2A6A20U1A (or U1B). Code converters A2A6A20U3 and A2A6A20U8 form the required codes to program dividers A2A6A20U4, A2A6A20U9 and A2A6A20U10 to correct divisors. These divisors are determined by the settings of coding switches A2A6S1 and A2A6S2 on the chassis of A2A6, as read in on A2A6A20P1-3 through A2A6A20P1-6 and A2A6A20P1-12 through A2A6A20P1-15. The 100 Hz inputs on A2-A6A20P1-8 through A2A6A20P1-11, from Hz

switch A2A14A11S1, determine the programming of preset divider A2A6A20U2 via code converter A2A6A20U7. Resistors A2A6A20R9, A2A6A20R11, A2A6A20R13 and A2A6A20R15 are pull-up resistors for level shifters A2A6A20Q1 thru A2A6A20Q8. A2A6A20R24 thru A2A6A20R27 are pull-up resistors for integrated circuit A2A6A20U3 and A2A6A20R18 thru A2A6A20R21 are pull-up resistors for integrated circuit A2A6A20U8. Divider A2A6A20U6 generates a reset pulse to begin the next count cycle.

3-91. The output of the divider network is applied to pin 3 of phase detector A2A6A19U1 from pin 15 of A2A6A20U6. A2A6A19U1 develops an output in proportion to the magnitude and direction of the phase difference between the divider network output and the 1 kHz reference input from Frequency Generator Subassembly A2A6A16. The phase detector output enables transistor A2A6A19Q2 of the charge pump circuit through resistor A2A6A19R19, or it enables transistor A2A6A19Q3 through resistor A2A6A19R4. The output of the charge pump is applied to loop filter A2A6A19C2, A2A6A19R7 and A2A6A19R9, which filters the pulses providing the dc control voltage to be applied to the variable capacitance diode A2A6A19A1CR1. The dc control voltage will decrease or increase the bias on A2A6A19A1CR1, changing the capacitance of A2A6A19A1CR1 as required to establish the proper output frequency from the VCO.

3-92. 100 kHz SYNTHESIZER (Figure 5-12). The 100 kHz Synthesizer Subassembly A2A6A17 produces the injection frequency of 22.40 to 23.30 MHz (lo-band) or 32.40 to 33.30 MHz (hi-band) used in the mid-frequency mixer circuits RF Translator Subassembly A2A6A8. A comparison of figure 5-12 with figure 5-13 shows that except for differences in frequency division details, the operation is basically similar to that of the corresponding circuits of the 10 kHz/1 kHz/100 Hz synthesizer.

3-93. The frequency divider network divides the VCO output frequency by the number in the range of 224 to 233 or 324 to 333 as determined by the setting of the 100 kHz coding switch A2A6S3 and the state of the hi-lo band control line at pin 7 of A2A6A17P1. The divider network output is applied to phase detector A2A6A17U1. The phase detector compares the output signal with the 100 kHz reference signal from Frequency Generator Subassembly A2A6A16. Any error detected causes the VCO frequency to be corrected in the same manner described for the 10 kHz/1 kHz/100 Hz Synthesizer.

3-94. Programmable divider network A2A6A17U2A (or U2B) through A2A6A17U6 functions similarly to the 10 kHz/1 kHz/100 Hz synthesizer divider network except there are no complement converters, and division control is preset to either 2 or 3 in response to the state of the hi-lo band control input at A2A6A17P1-7. Transistor A2A6A17Q3 converts the +20 V/ground control input into logic low/logic high levels for application to data pin 3 of A2A6A17U5. Thus, A2A6A17U5 is preset to divide-by-2 for a +20 V control input (lo-band) or to divide-by-3 for a ground control input (hi-band).

3-95. The VCO output is applied to amplifier A2A6A17Q1. The setting of variable resistor A2A6A17R10 establishes the output signal level. The signal is applied from the collector of A2A6A17Q1 to a bandpass filter consisting of A2A6A17L4 - A2A6A17L7, A2A6A17C15, A2A6A17C17 and A2A6A17C18. Amplifier A2A6A17Q2 provides isolation and a low impedance output to the mid-frequency mixing circuits of RF Translator Assembly A2A6A8.

3-96. 10 MHz/1 MHz SYNTHESIZER (Figure 5-10). The 10 MHz/1 MHz Filter Subassembly A2A6A14 provides each of 17 injection frequencies as selected by the front panel controls in the range of 2.5 to 23.5 MHz, to the high frequency mixer circuit of RF Translator Subassembly A2A6A8. These frequencies are derived after frequency division in A2A6A13U5 from the phase-locked VCO output of A2A6A13U3. The 20 to 50 MHz VCO output signal is also applied, after frequency division by two in A2A6A13U5, through NAND gate U6B to programmable frequency dividers U7 and U8. The resultant approximately 500 kHz signal is then applied to pin 3 of phase detector A2A6A13U1. U1 then compares this signal with a 500 kHz reference signal supplied by Frequency Generator Subassembly A2A6A16 and generates a dc

correction voltage (via loop filter A2A6A13-U2, A2A6A13C3 and A2A6A13R8) to lock the VCO frequency.

3-97. The VCO output signal is applied to level shifters A2A6A13U4A and A2A6A13-U4B, which provide logic level conversion to divider A2A6A13U5. A2A6A13U5 provides divisions by 2, 4, or 8, at pins 3, 2, and 6, respectively. The gating circuitry selects the outputs from divider A2A6A13U5 and the appropriate filter in 10 MHz/1 MHz Filter Subassembly A2A6A14. If pins 2 and 9 of A2-A6A13U9 are at a logic high and pin 1 of A2A6A13U9 is at a logic low, NAND gate A2A6A13U6A (a NOR gate operated as a negative logic NAND) will open and pass the divide-by-8 output of A2A6A13U5 and enable 4 MHz filter switch A2A6A14Q1. In a similar manner, NAND Gate A2A6A13U6C will enable the divide-by-4 output of A2A6A13U5 when output pin 2 of A2A6A13U9 is at a logic low. NAND gate A2A6A13U6D enables the divide-by-2 output of A2A6A13U5 when output pin 9 of A2A6A13U9 is at a logic low. The divide-by-2 output of A2A6A13U5 is buffered by NAND gate A2A6A13U6B and passed to the divider network.

3-98. Decade dividers A2A6A13U7 and A2A6A13U8 are preset via data inputs. A five-wire tuning code consisting of open circuits and grounds from Code Generator Assembly A2A7 is applied through filter assembly A2A6A13A1 to input pins 10 through 14 of A2A6A13U9. The five binary bits from Code Generator A2A7 represent any of 17 combinations of settings of the front-panel 10 MHz and 1 MHz dials. These input codes are converted to appropriate format in eight bit-positions at the output of A2A6A13U9. The code is then applied to data pins 4, 5 and 6 of A2A6A13U7 and pins 3 and 4 of A2A6-A13U8. Preset dividers A2A6A13U7 and A2A6A13U8 accept the output of NAND gate A2A6A13U6B and pass the divided 500 kHz output to phase detector input A2A6A13U1-3. MHz Filter Switches A2A6A14Q1, A2A6-A14Q4 and A2A6A14Q7 are enabled by pins 1, 2 and 9 of A2A6A13U9, respectively. Inductors A2A6A14L6, A2A6A14L12 and A2-A6A14L18 function as rf suppressor chokes to the +5 V power supply for the filter amplifiers.

3-99. The three filter networks within 10 MHz/1 MHz Filter Subassembly A2A6A14 operate in the same manner. The injection signal is supplied to a conventional, untuned rf amplifier (A2A6A14Q2, A2A6A14Q5 or A2A6A14Q8). A variable resistor in the emitter circuit of the rf amplifier (A2A6-A14R7, A2A6A14R17 or A2A6A14R27) adjusts the output level applied to the bandpass filter. This filter rejects all frequencies except the desired injection signal. Buffers A2A6A14Q3, A2A6A14Q6 and A2A6A14Q9 provide a low impedance injection signal source for RF Translator Subassembly A2-A6A8.

3-100. POWER DISTRIBUTION (Figure 5-14). All primary power for the receiver is from a nominal 115 Vac power source connected to receptacle A1A1J3 mounted on the rear of the case. Primary ac power is then applied through safety interlock switch A1-A2S1, MODE SELECTOR Switch A2A14S2 and fuses A2A14F1 and A2A14F2 to the primary of power transformer A2T1. Indicator lamps, which are an integral part of fuse holders A2A14XF1 and A2A14XF2 will illuminate if an associated fuse is open. The primary winding of power transformer A2T1 has five taps to accommodate various input line voltages.

3-101. Four secondary windings are provided on transformer A2T1, from, which the internal operating voltages for the receiver are derived. Terminals 13 and 14 furnish 6.3 Vac for vacuum tube filaments in RF Amplifier Assembly A2A4. Terminal pairs 7 and 8, 9 and 10, and 11 and 12 of A2T1 furnish ac voltages to bridge rectifier circuits from which +110 V, +28 V and -30 V respectively are obtained, in Chassis Assembly A2 and Control Assembly A2A13.

3-102. +28 V DISTRIBUTION (Figure 5-15). The output of the +28 V bridge rectifier A2-CR9 is applied to a choke input filter consisting of choke A2L2, capacitor A2C2 and bleeder resistor A2R8. The filtered +28 V is applied to Frequency Standard Assembly A2A5 through noise filter A2FL2 and to front panel lamps A2A14DS3 and A2A14DS4, via A2A13R1 and A2A13R2, to illuminate the frequency display windows above the MHz

and kHz controls. When MODE SELECTOR Switch A2A14S2 is in any position other than OFF or STDBY, the +28 V will also be applied through contacts of A2A14S2 section C to RF Amplifier Assembly A2A4, Antenna Overload Assembly A2A9, Translator/Synthesizer Assembly A2A6 and tune relay A2A13-K1. While tune relay A2A13K1 is deenergized, the +28 V will also be applied to hi/lo filter relay A2A13K2, to the +20 V regulating circuit in A2U1 and to section D of MODE SELECTOR Switch A2A14S2. Switch wafer A2A14S2-D selectively applies the +28 V to either or both IF/Audio Amplifiers A2A2 and A2A3, depending on the mode of receiver operation selected. Tune relay A2A13K1 can be energized by a tune relay ground from the RF Amplifier Assembly A2A4 or Code Generator Assembly A2A7.

3-103. +20 V AND +5 V DISTRIBUTION (Figure 5-16). The +28 volt supply voltage is applied to voltage regulator A2U1. The regulated +20 V, which is the output from A2U1 is applied through resistors A2A13R6 and A2A13R5 to GAIN control A2A14R3. The regulated +20 V is also applied to Meter Driver A2A14A12, through noise filter A2-FL1 to Frequency Standard Assembly A2A5 and directly to Translator/Synthesizer Assembly A2A6. The +20 V is also applied to the following sets of contacts on Mode Selector Switch A2A14S2: section A2A14S2A rear contacts 4 and 6; section A2A14S2B rear contacts 3 and 6; section A2A14S2C front contacts 2 and 11, and rear contacts 3 and 10; section A2A14S2D rear contact 12; and to contact A2A13K2B3 of the hi/lo filter relay.

3-104. MODE SELECTOR Switch A2A14S2 selectively applies the +20 V to Mode Selector Assembly A2A1 and to IF/Audio Amplifier Assemblies A2A2 and A2A3, according to the mode of receiver operation. In the CW mode, +20 V is also applied to BFO control A2A14R6, through section C rear contact 4 of MODE SELECTOR Switch A2A14S2. As long as hi-lo filter relay A2A13K2 remains deenergized, the +20 V from contact B2 will be distributed to Translator/Synthesizer Assembly A2A6 and to subassemblies A2A6A8 and A2A6A17. The +20 V distributed to Power Supply A2A6A15 is converted to +5 V for use in the A2A6 circuitry. The +5 V is further distributed to energize the +4 V Power Supply Subassembly A2A14A11A1.

3-105. +110 V DISTRIBUTION (Figure 5-17). The output of the +110 V bridge rectifier A2A13CR1 through A2A13CR4 is applied from A2P25-12 to a choke input filter consisting of choke A2L1, capacitor A2C1 and resistor A2R20. The filtered +110 V is used to supply plate and screen voltage to rf amplifiers A2A4V1 and A2A4V2 in RF Amplifier Assembly A2A4, through A2A14P3-8, section B rear contacts 9 and 11 of MODE SELECTOR Switch A2A14S2, A2A14J4-12, normally closed contacts B2 and B3 of tune relay A2-A13K1 and A2XA4P2-12. The +110 V is also applied to pin 1 of the Hz vernier indicator lamp A2A14DS5 through A2A14P1-3, contacts 6 and 7 of Hz switch A2A14A11S1B and A2A14A11A1R6 and -R7, when the Hz switch is in the vernier (V) position and MODE SELECTOR Switch A2A14S2 is in any mode other than STDBY or OFF.

3-106. -30 V DISTRIBUTION (Figure 5-18). The output of the -30 V bridge rectifier A2-A13CR8 through A2A13CR11 is applied to a filter network consisting of resistor A2A13-R3 and capacitor A2A13C1. The output from the network is applied through resistor A2-A13R4 to the series-connected 15 volt zener diodes A2A13CR13 and A2A13CR12 and capacitor A2A13C2 to provide a regulated -30 V source.

3-107. The -30 V is used as the negative supply for the Hz vernier indicator A2A14-DS5 and Meter Driver A2A14A12 and is selectively applied to either or both IF/Audio Amplifier Assemblies A2A2 and A2A3 through front panel MODE SELECTOR Switch A2A14S2, depending on the mode of operation. The -30 V is used in the direct-coupled rf AGC amplifiers A2A2A1Q1 and A2A3A1Q1 and is regulated to -20 V and applied to meter amplifier A2A14A12U1A.

3-108. CONTROL. The types of controls that are used in Radio Receiver R-1051H/-URR overall receiver tuning and 100 Hz synthesizer tuning are described in the following paragraphs.

3-109. OVERALL RECEIVER TUNING CONTROL (Figure 5-19). The R-1051H/URR

tuning control is comprised of Code Generator Assembly A2A7, switch A2A4S1, motor A2A4B1, relay A2A4K1 and hi-lo filter relay A2A13K2. The tuning circuit switches form two parallel circuits, each employing a five-wire coding scheme. One of these circuits is an open-seeking circuit; the other supplies a five-wire code to code converter circuit A2A6A13U9. A third circuit consisting of one code line controls the hi-lo band relay A2A13K2. The tuning circuits are described in detail in the following paragraphs.

3-110. The code generator switches (Figure 5-46) are positioned by the 10 MHz and 1 MHz controls on the front panel. The five-wire tuning code resulting from the switch positions appears at A2A7P1-1 through -5 and will be one of 28 possible combinations of opens and grounds (Table 3-2) representing one of the 28 positions of turret switch A2A4S1. When the 1 or 10 MHz control position is changed, a ground path through the common contact of section A of switch A2A4S1 to contact X2 of relay A2A4K1 is established and turret motor relay A2A4K1 is energized. When relay A2A4K1 energizes, turret motor A2A4B1 is energized by +28 V through contacts A1 and A2 of relay A2A4K1.

3-111. When motor A2A4B1 is energized it rotates the rf tuning turret and turret motor switch A2A4S1 until the complement of the code from A2A7 is reflected by switch A2A4S1. Whenever the codes are complementary, the ground path to turret motor relay A2A4K1 is broken, A2A4K1 is deenergized and A2A4B1 stops rotation. Simultaneously the five-wire code appearing at A2A7P1-21 through -25 (Table 3-2) is transmitted to 10 MHz/1 MHz Synthesizer Subassembly A2A6A13 where it is converted to an inverse binary coded decimal (BCD) for use by the synthesizer.

3-112. Code Generator Assembly A2A7 also generates the hi-lo band control line codes, which are distributed from A2A7P1-6. When a ground is provided at A2A7P1-6, hi-lo filter relay A2A13K2 is energized and ground is relayed to the hi-lo control line from A2P25-14. Conversely, when the code causes relay A2A13K2 to be deenergized, +20 V is applied to the control line.

3-113. Whenever turret motor relay A2A4K1 is energized, a ground connection is provided to tune relay A2A13K1. A2A13K1 is energized, thereby removing +28 V from the +20 V regulator A2U1 to disable receiver functions during the tuning cycle (Paragraph 3-102). Additionally, tune relay A2A13K1 is energized by a ground connection from the code generator whenever the MHz controls are set at 00 or 01.

3-114. Hz SYNTHESIZER TUNING CONTROL (Figure 5-32, Zone 71A). Hz Control and Vernier Assembly A2A14A11 provides a variable +2.5 to +3.7 volts for vernier tuning of the 10 kHz/1 kHz/100 Hz Synthesizer Subassembly A2A6A19, +4.3 volt nonvernier control voltage and a nominal +4 V for generation of a four bit ("0" = 0 volt, "1" = +4 volts) BCD number for digital tuning of the 10 kHz/1 kHz/100 Hz synthesizer.

3-115. The +4 V bias for the front panel Hz vernier control A2A14A11R1 is obtained from the +5 V (paragraph 3-104) through series resistor A2A14A11A1R4 and is regulated by zener diode A2A14A11A1CR2. Potentiometer A2A14A11A1R2 affords adjustment of the voltage gradient of the Hz vernier control. The variable dc (+2.5 to +3.7 volts) output from the wiper of the Hz vernier control A2A14A11R1 is connected to Hz switch A2A14A11S1A front, contact 10. When the Hz switch is placed into the vernier (V) position, the variable dc (+2.5 to +3.7 volts) is applied to Frequency Generator A2A6A16 from A2A14A11S1A-F (front) via A2XA6P1-14. Also, when the Hz switch is in the vernier position the frequency generator gating circuit does not receive the +4.3 volt nonvernier control voltage from A2A14A11-S1A-R (rear) contact 5.

3-116. When the Hz switch is placed to any position other than V, +4.3 V nonvernier control voltage is applied to the gating circuit of Frequency Generator A2A6A16 from A2-A14A11S1A-R, contact 5 through A2XA6P1-19. The nominal 4 V for the BCD generation and nonvernier control is obtained by applying +5 V from Power Supply Subassembly A2A6A15 in Translator/Synthesizer Assembly A2A6 to resistor A2R23 and zener diode A2-A14A11A1CR1 (Figure 5-32).

Table 3-2. Tuning Code Chart

MHz CONTROL SETTINGS	TUNING CODE[1]										
	CODE GENERATOR PLUG A2A7P1 TERMINALS[2]										
	-1	-2	-3	-4	-5	-6	-21	-22	-23	-24	-25
02	G	O	G	O	O	O	G	G	G	O	G
03	O	G	O	O	O	O	G	O	G	G	G
04	G	O	O	O	G	O	G	G	O	G	G
05	O	O	O	G	G	O	O	G	G	O	G
06	O	O	G	G	O	G	O	G	O	O	O
07	O	G	G	O	G	O	G	O	O	G	G
08	G	G	O	G	G	O	G	G	O	O	G
09	G	O	G	G	O	G	G	O	G	O	O
10	O	G	G	O	O	G	G	G	O	G	O
11	G	G	O	O	O	O	O	O	G	G	G
12	G	O	O	O	O	O	O	O	O	G	G
13	O	O	O	O	G	G	G	O	G	G	G
14	O	O	O	G	O	O	O	G	G	G	O
15	O	O	G	O	G	O	O	O	G	G	O
16	O	G	O	G	G	O	G	G	G	G	O
17	G	O	G	G	G	G	G	O	O	G	G
18	O	G	G	G	G	G	G	G	O	O	G
19	G	G	G	G	O	G	G	G	G	O	O
20	G	G	G	O	O	G	O	G	G	G	G
21	G	G	O	O	G	G	O	O	G	G	G
22	G	O	O	G	O	O	O	O	O	O	G
23	O	O	G	O	O	O	G	G	G	G	O
24	O	G	O	O	G	G	O	G	G	G	O
25	G	O	O	G	G	G	O	O	G	G	O
26	O	O	G	G	G	G	G	G	G	G	O
27	O	G	G	G	O	O	O	O	O	G	G
28	G	G	G	O	G	O	O	O	G	G	G
29	G	G	O	G	O	O	O	G	G	G	G

[1] G = Ground; 0 = Open.

[2] Terminals A2A7P1-1 through -5 connect to RF Amplifier Assembly A2A4; terminal A2A7P1-6 connects to hi/lo filter relay A2A14K2; terminals A2A7P1-21 through -25 connect to 10 MHz/1 MHz Synthesizer Subassembly A2A6A13.

3-117. When Hz switch A2A14A11S1 is in the V position, +110 V and -30 V from the Control Assembly A2A13 are applied to a sawtooth oscillator network consisting of charging resistor A2A14A11A1R7, capacitor A2A14A11A1C4, discharge current-limiting resistor A2A14A11A1R6 and neon lamp A2-A14DS5 on the front panel. The front panel indicator lamp A2A14DS5 will flash when the positive charge on A2A14A11A1C4 and the -30 V exceeds the striking potential of A2-A14DS5. Capacitor A2A14A11A1C4 will then discharge through the -30 V supply and indicator A2A14DS5 until the lamp extinguishes.

3-118. TUNING MECHANISM. Tuning of the R1051H/URR is accomplished by setting the front panel MHz, kHz and Hz frequency controls to indicate the desired received signal frequency, which is displayed in digital form in the window above the controls. Positioning the front panel controls tunes the equipment circuits by electrical (Paragraph 3-109) and mechanical means.

3-119. The mechanical tuning mechanisms consist of chain drives between the individual front panel kHz controls and the shaft of the 100 kHz turret in RF Amplifier Assembly A2A4, the shaft of the 10 kHz turret drive gear in A2A4 and the shafts of the coding switches in Translator/Synthesizer Assembly A2A6. Figure 5-37 indicates the switch coding positions. The chain drive mechanisms and the shaft couplers of the tuning system are adjusted to obtain precise tracking for all kHz tuning control positions.

3-120. CIRCUIT LEVEL DESCRIPTIONS.

3-121. GENERAL. The following paragraphs refer to the maintenance schematic diagrams of individual assemblies and subassemblies of the equipment and discuss the circuits contained in each assembly. The discussions are in reference designation order. Discussion is brief for those circuits that are conventional and whose theory is covered in NAVSEA 0967-LP-000-0120. Full discussion is provided for unconventional circuits or for peculiar applications of any conventional circuits. Manufacturers' simplified schematic diagrams or functional block diagrams of integrated circuits used in R-1051H/URR are provided in figures 3-3 through 3-24. For full information on conventional circuits refer to the appropriate sections in NAVSEA 0967-LP-000-0120 for the specific type of circuit involved.

3-122. CASE A1 (Figure 5-32). The Case A1 houses the slide-out Chassis Assembly A2, Front Panel Assembly A2A14, Filter Box Assembly A1A1, Interlock Switch Assembly A1A2 and the antenna and frequency standard external connectors. Discussion of the circuits of the case is included in that of the chassis/panel assembly (Paragraph 3-125).

3-123. FILTER BOX ASSEMBLY A1A1 (Figure 5-32). Filter Box Assembly A1A1, mounted at the rear of the Case A1, houses capacitors used to filter incoming and outgoing signals, and three jacks provided to connect incoming ac power and to connect the USB and LSB audio outputs to remote equipment. Metal oxide varistors RV1, RV2 and RV3 in subassembly A1A1A1 suppress transients in the 115 Vac supply.

3-124. INTERLOCK SWITCH ASSEMBLY A1A2 (Figure 5-32). Interlock Switch Assembly A1A2 disconnects 115 Vac power from the receiver when the chassis/panel assembly is withdrawn from the case.

3-125. CHASSIS ASSEMBLY A2 and PANEL ASSEMBLY A2A14 (Figure 5-32). The Chassis Assembly A2 and Panel Assembly A2A14 house the receiver plug-in electronic assemblies, controls and indicators, as well as miscellaneous electronic components. Figure 5-32 shows the wiring, control and hard wired assemblies of A2 and A2A14. The hard wired assemblies for which schematic information is shown in figure 5-32 include Control Assembly A2A13, Antenna Overload Assembly A2A9, 20 and 30 MHz Filter Assembly A2A10, Vernier Switch Subassembly A2A14A11 (which includes +4 V Power Supply Subassembly A2A14A11A1), Meter Driver Subassembly A2A14A12, Low Pass Filter A2FL3, Filter Box Assembly A1A1 and Interlock Switch Assembly A1A2.

3-126. The schematic diagram also shows the Case A1 and interface jacks and connectors, which are mounted on the rear of the case.

(Text continued on page 3-50)

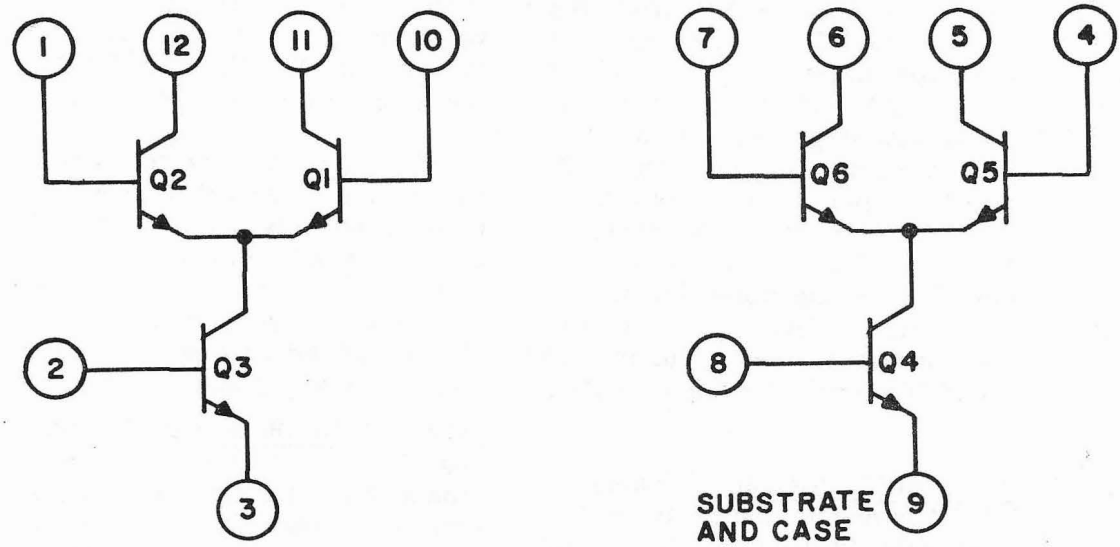

SCHEMATIC DIAGRAM

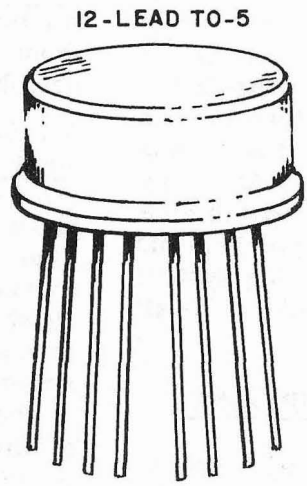

DESCRIPTION: This integrated circuit consists of two differential amplifiers with six constant-current, low-noise transistors and independently accessible inputs and outputs. Its monolithic construction makes this device particularly useful in dual channel applications where matched performance of the two channels is required.

Figure 3-3. Integrated Circuit - - Dual Differential Amplifier (CA3049). Part No's. 48P228318-01, -02.

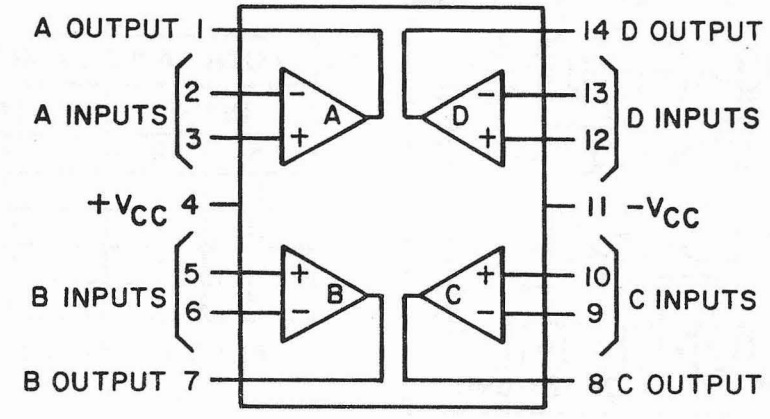

14-LEAD FLAT-PACK AND DUAL-IN-LINE (TOP VIEW)

DESCRIPTION: Linear, monolithic medium-speed op amp with internal frequency compensatio and high impedance buffer. Accepts wide range differential voltage input. Class AB output stage eliminates crossover distortion.

Figure 3-4. Integrated Circuit - - Quad Operational Amplifier (4741).
Part No. M38510/11003BCA.

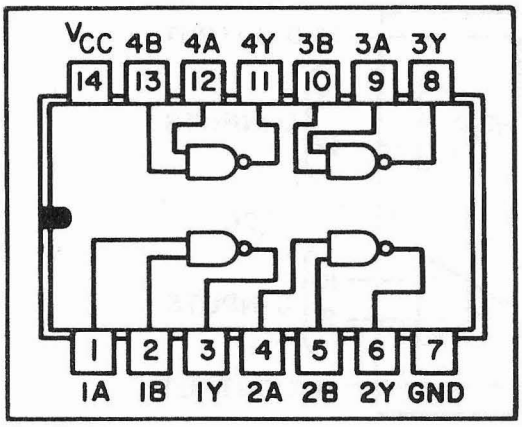

TRUTH TABLE EACH GATE		
INPUT		OUTPUT
A	B	Y
L	L	H
H	L	H
L	H	H
H	H	L

POSITIVE LOGIC $Y = \overline{AB}$

DESCRIPTION: This integrated circuit is a TTL, quadruple, 2- input, positive NAND logic gating microcircuit.

Figure 3-5. Integrated Circuit - - TTL Quad NAND Gate (5400). Part No. M38510/00104BCB.

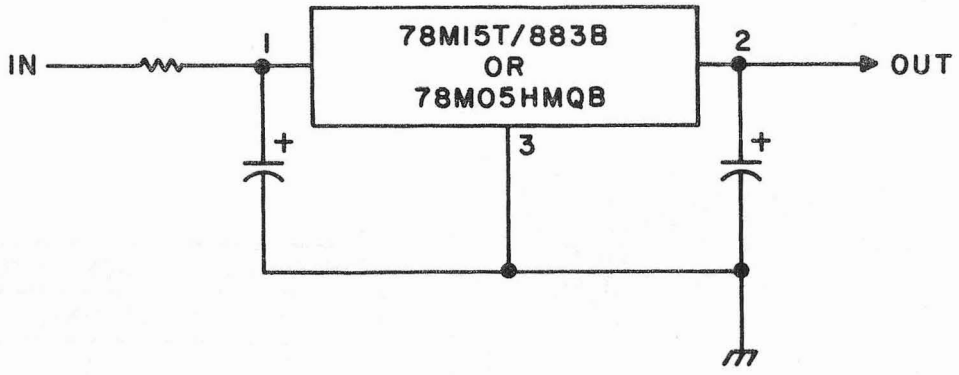

SIMPLIFIED CIRCUIT DIAGRAM

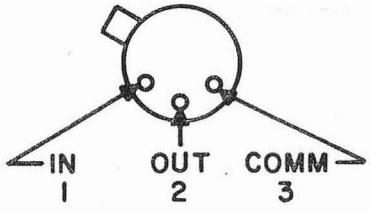

CONNECTION DIAGRAM, TOP VIEW

DESCRIPTION: These fixed output regulators employ internal current limiting, thermal shutdown and safe-area compensation for ruggedness. The input and output capacitors, located as close as practicable to the regulator, improve stability and transient response.

Figure 3-6. Integrated Circuit - - 3-Terminal Positive Voltage Regulators (78M15T/883B, 78M05HMQB). Part No's. 48P226600-03, -01.

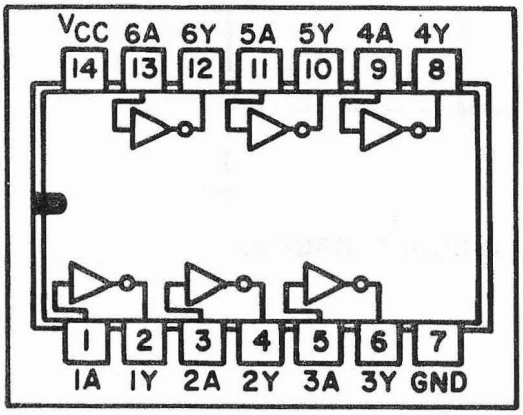

TRUTH TABLE EACH GATE	
INPUT	OUTPUT
A	Y
L	H
H	L

POSITIVE LOGIC = $\overline{A}$

DESCRIPTION: This integrated circuit is a TTL, Hex, single-input positive logic gating microcircuit with totem pole output.

Figure 3-7. Integrated Circuit -- TTL Hex Single - Input Inverter Gates (5404). Part No. M38510/00105

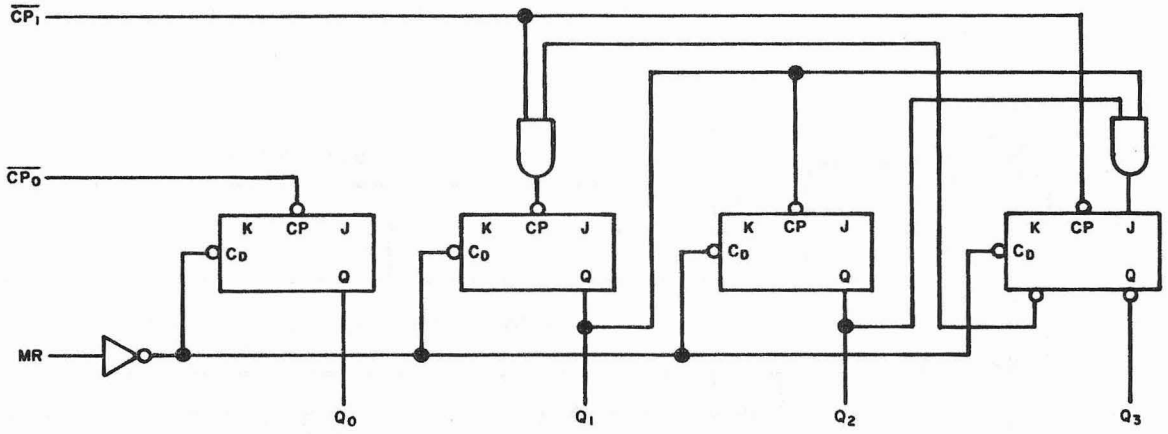

LOGIC DIAGRAM (ONE HALF SHOWN)

INPUT LOADING/FAN-OUT

PIN NAMES	DESCRIPTION
$\overline{CP}_0$	÷2 SECTION CLOCK INPUT (ACTIVE FALLING EDGE)
$\overline{CP}_1$	÷5 SECTION CLOCK INPUT (ACTIVE FALLING EDGE)
MR	ASYNCHRONOUS MASTER RESET INPUT (ACTIVE HIGH)
Q_0-Q_3	FLIP-FLOP OUTPUTS

THE Q_0 OUTPUT IS GUARANTEED TO DRIVE THE FULL RATED FAN-OUT PLUS THE $\overline{CP}_1$ INPUT

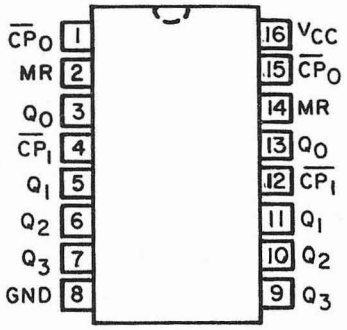

TRUTH TABLE
(INPUT ON CP_1)

COUNT	OUTPUTS		
	Q_3	Q_2	Q_1
0	L	L	L
1	L	L	H
2	L	H	L
3	L	H	H
4	H	L	L

H = HIGH VOLTAGE LEVEL
L = LOW VOLTAGE LEVEL

BCD TRUTH TABLE
INPUT ON $\overline{CP}_0$, Q_0 TO $\overline{CP}_1$

COUNT	OUTPUTS			
	Q_3	Q_2	Q_1	Q_0
0	L	L	L	L
1	L	L	L	H
2	L	L	H	L
3	L	L	H	H
4	L	H	L	L
5	L	H	L	H
6	L	H	H	L
7	L	H	H	H
8	H	L	L	L
9	H	L	L	H

H = HIGH VOLTAGE LEVEL
L = LOW VOLTAGE LEVEL

DESCRIPTION: The 54LS390 contains a pair of high speed 4-stage ripple counters. Each half of the 54LS390 is partitioned into a divide-by-two section and a divide-by-five section, with a separate clock input for each section. The two sections can be connected to count in the 8421 BCD code or they can count in a bi-quinary sequence to provide a square wave (50% duty cycle) at final output.

Each half of the 54LS390 contains a ÷5 section that is independent except for the common MR function. The ÷5 section operates in 421 binary sequency. If the input frequency is connected to $\overline{CP}_0$ and the Q_0 output is connected to $\overline{CP}_1$, a decade divider operating in the 8421 BCD code is obtained. A HIGH signal On MR forces all outputs LOW and prevents counting.

Figure 3-8. Integrated Circuit - - Schottky TTL Dual Decade Counter (54LS390). Part No. 48P228887-01.

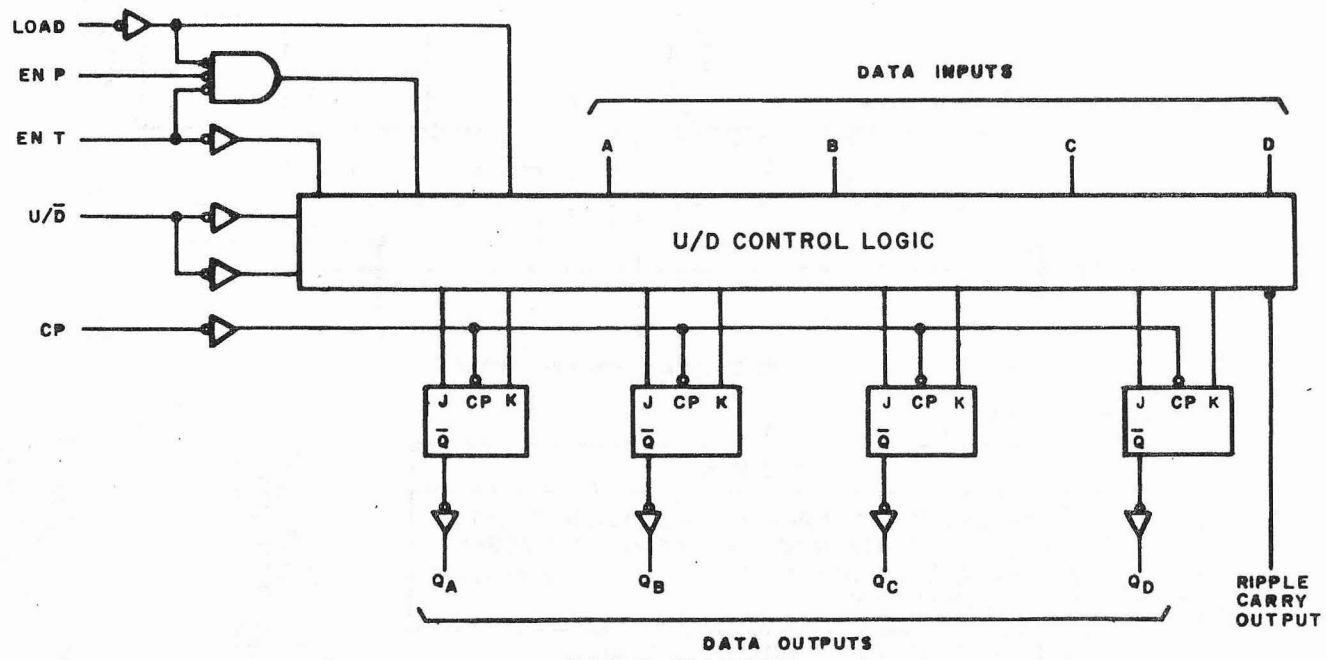

LOGIC DIAGRAM

MODE SELECT TABLE

LD	EN P	EN T	U/D	ACTION ON RISING CLOCK EDGE
L	X	X	X	LOAD (D_N — Q_N)
H	L	L	H	COUNT UP (INCREMENT)
H	L	L	L	COUNT DOWN (DECREMENT)
H	H	X	X	NO CHANGE (HOLD)
H	X	H	X	NO CHANGE (HOLD)

H = HIGH VOLTAGE LEVEL
L = LOW VOLTAGE LEVEL
X = IMMATERIAL

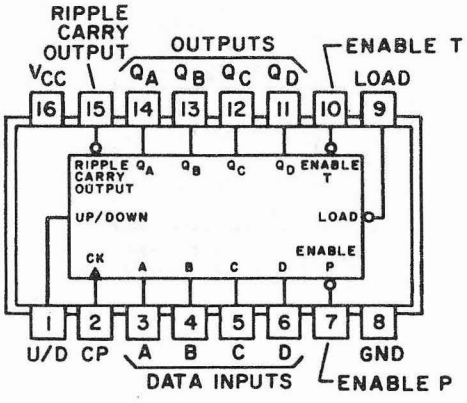

DESCRIPTION: The 54S/LS168 is a fully synchronous 4-stage up/down counter featuring a preset capability for programmable operation, carry lookahead for easy cascading and a U/$\bar{D}$ input to control the direction of counting. It counts in the BCD (8421) sequence and all state changes, whether in counting or parallel loading, are initiated by the LOW-to-HIGH transition of the clock.

UP-COUNT SEQUENCE TABLE

Q_A (LSB)	Q_B	Q_C	Q_D (MSB)
L	L	L	L
H	L	L	L
L	H	L	L
H	H	L	L
L	L	H	L
H	L	H	L
L	H	H	L
H	H	H	L
L	L	L	H
H	L	L	H

Figure 3-9. Integrated Circuit - - Schottky TTL Bi-directional Binary Coded Decimal Counter (54S168, 54LS168). Part No's. 48P228737-01, 48P228879-01.

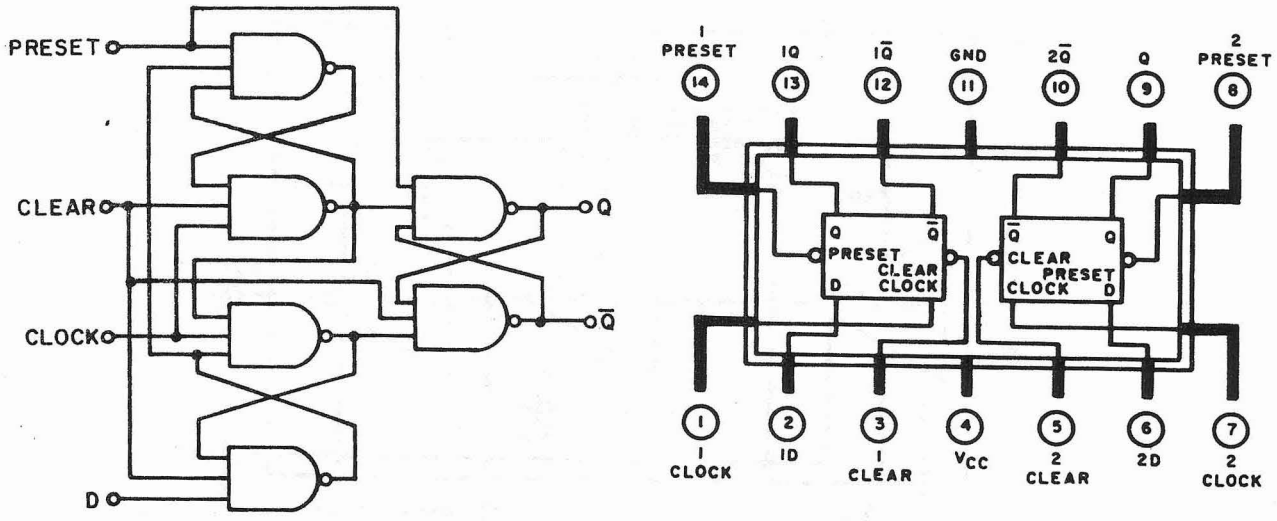

LOGIC DIAGRAMS AND TERMINAL CONNECTIONS

TRUTH TABLE EACH FLIP-FLOP		
t_n		t_{n+1}
INPUT D	OUTPUT Q	OUTPUT $\overline{Q}$
L	L	H
H	H	L

POSITIVE LOGIC:

LOW INPUT TO PRESET SETS Q TO HIGH-LEVEL.
LOW INPUT TO CLEAR SETS Q TO LOW-LEVEL.
CLEAR AND PRESET ARE INDEPENDENT OF CLOCK AND DOMINATE REGARDLESS OF THE STATE OF CLOCK OR D INPUT.

t_n = BIT TIME BEFORE CLOCK PULSE.
t_{n+1} = BIT TIME AFTER CLOCK PULSE.

DESCRIPTION: The 5474 is a TTL dual D-type flip-flop with Direct Clear and Set inputs and complementary (Q, $\overline{Q}$) outputs. Information at the input is transferred to the outputs on the positive edge of the clock pulse. Clock triggering occurs at a voltage level of the clock pulse and is not directly related to the transition time of the positive going pulse. After the clock pulse input threshold voltage has been passed, the Data input is locked out and information present will not be transferred to the outputs until the next rising edge of the Clock Pulse input.

Figure 3-10. Integrated Circuit -- Dual D-Type Flip-Flop (5474). Part No. M38510/00205BCB.

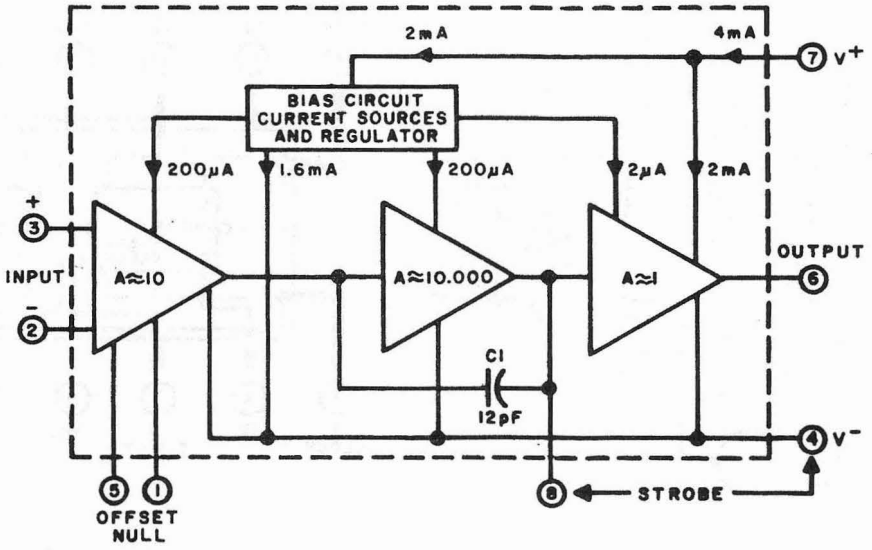

LOGIC DIAGRAM

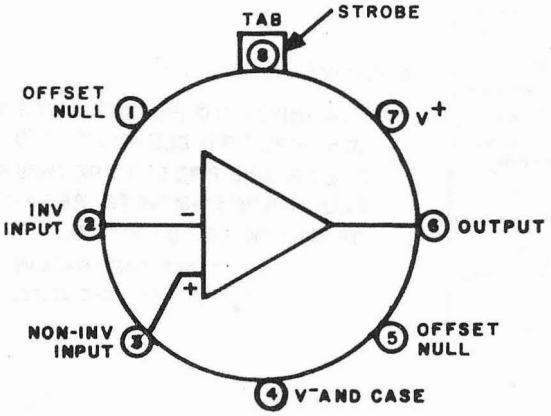

TOP VIEW

DESCRIPTION: This integrated circuit is an operational amplifier that combines the advantage of high-voltage PMOS transistors on a single monolithic chip. This internally compensated operational amplifier features gate protected PMOS transistors in the input circuit to provide very high input impedance, very low input current, and high-speed performance. The input terminals may be operated down to 0.5 V below the negative supply rail. Two class A amplifier stages provide the voltage gain, and a class AB amplifier stage provides the current gain necessary to drive low impedance loads.

Figure 3-11. Integrated Circuit - - PMOS Operational Amplifier (CA3140S3). Part No. 48P226682-01.

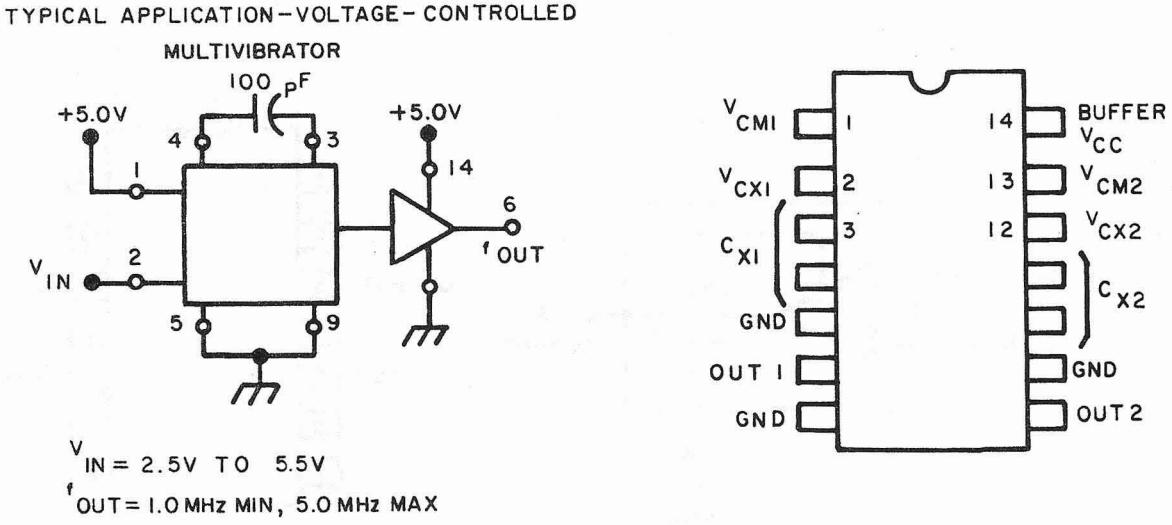

DESCRIPTION: The MC4324 consists of two independent voltage-controlled multivibrators with output buffers. Variation of the output frequency over a 3.5-to-1 range is assured with an input dc control voltage 1.0 to 5.0 volts.

Operating frequency is specified at 25 MHz at 25°C. Operation to 15 MHz is possible over the specified temperature range.

This device was designed specifically for use in phase-locked loops for digital frequency control. It can also be used in other applications requiring a voltage-controlled frequency, or as a stable fixed frequency oscillator (3.0 MHz to 15 MHz) by replacing the external control capacitor with a series mode crystal.

Figure 3-12. Integrated Circuit - - Dual Voltage-Controlled Multivibrator (MC4324). Part No. 48P226457-01.

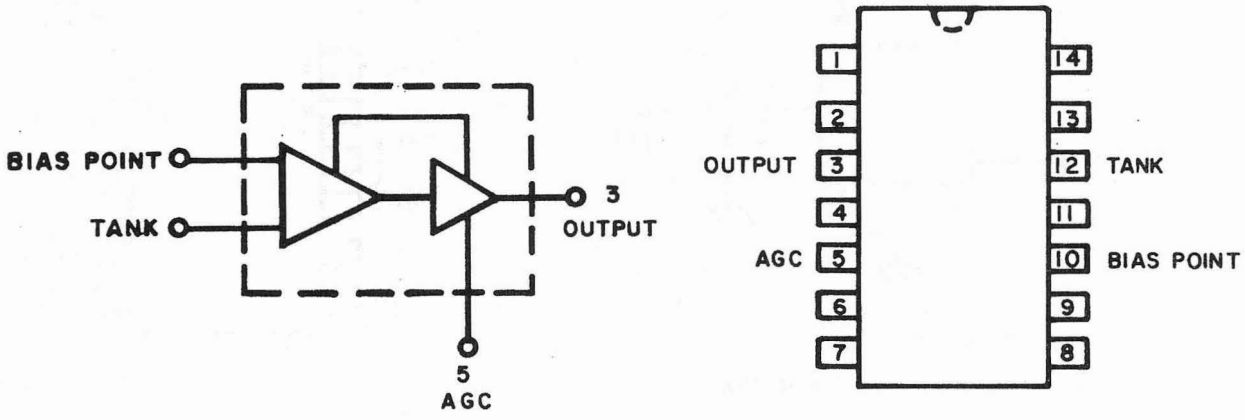

DESCRIPTION: This integrated circuit is a voltage-controlled oscillator used in applications requiring a fixed or variable frequency clock source of high spectral purity. Use of positive feedback, coupled with automatic gain control (AGC) to limit the current, allows optimum frequency response of the oscillator.

Figure 3-13. Integrated Circuit - - Voltage-Controlled Oscillator (MC1648). Part No. 48P228371-01.

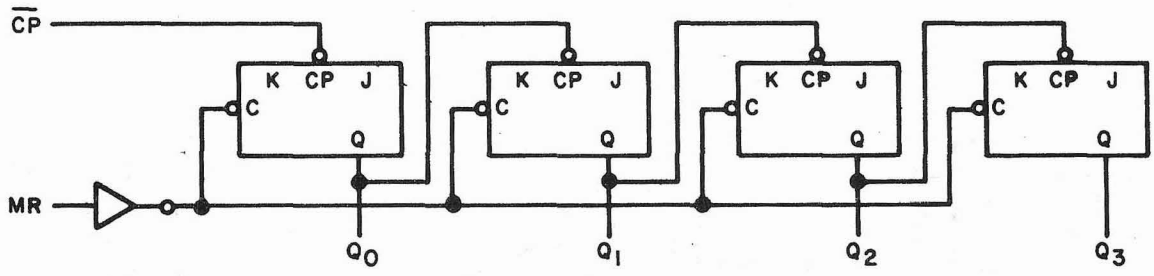

LOGIC DIAGRAM (ONE HALF SHOWN)

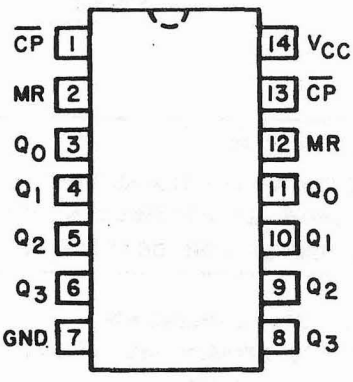

INPUT LOADING/FAN-OUT

PIN NAMES	DESCRIPTION
$\overline{CP}$	CLOCK PULSE INPUT (ACTIVE FALLING EDGE)
MR	ASYNCHRONOUS MASTER RESET INPUT (ACTIVE HIGH)
Q_0-Q_3	FLIP-FLOP OUTPUTS

TRUTH TABLE

COUNT	OUTPUTS			
	Q_3	Q_2	Q_1	Q_0
0	L	L	L	L
1	L	L	L	H
2	L	L	H	L
3	L	L	H	H
4	L	H	L	L
5	L	H	L	H
6	L	H	H	L
7	L	H	H	H
8	H	L	L	L
9	H	L	L	H
10	H	L	H	L
11	H	L	H	H
12	H	H	L	L
13	H	H	L	H
14	H	H	H	L
15	H	H	H	H

H = HIGH VOLTAGE LEVEL
L = LOW VOLTAGE LEVEL

DESCRIPTION: The 54LS393 is a dual 4-bit binary ripple counter with separate Clock and Master Reset inputs to each counter. Each half of this device operates in the modulo-16 binary sequence. The first flip-flop is triggered by HIGH-to-LOW transitions of the $\overline{CP}$ input signal. Each of the other flip-flops is triggered by a HIGH-to-LOW transition of the Q output of the preceding flip-flop. Thus state changes of the Q outputs do not occur simultaneously, and should not be used as clocks for other counters, registers or flip-flops. A HIGH signal on MR forces all outputs to the LOW state and prevents counting.

Figure 3-14. Integrated Circuit - - Schottky TTL Dual 4-Bit Binary Counter (54LS393). Part No. M38510/32702.

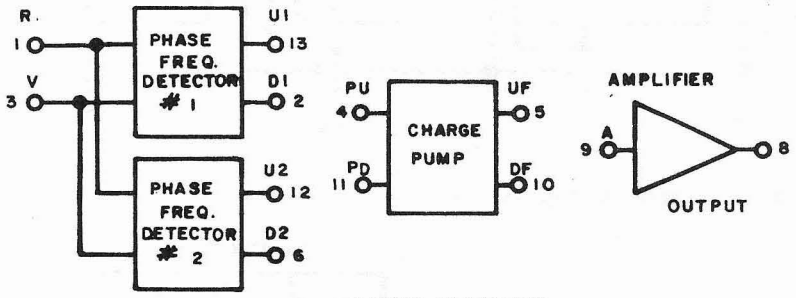

LOGIC DIAGRAM

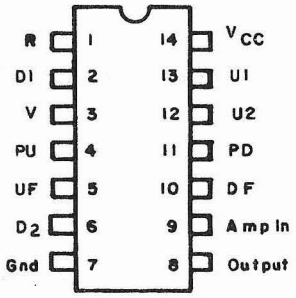

INPUT STATE	INPUT R	INPUT V	OUTPUT U1	OUTPUT D1	OUTPUT U2	OUTPUT D2
1	0	0	X	X	1	1
2	1	0	X	X	0	1
3	1	1	X	X	1	0
4	1	0	X	X	0	1
5	0	0	X	X	1	1
6	1	0	X	X	0	1
7	0	0	0	1	1	1
8	1	0	0	1	0	1
9	0	0	0	1	1	1
10	0	1	0	1	1	1
11	0	0	1	1	1	1
12	0	1	1	1	1	1
13	0	0	1	0	1	1
14	0	1	1	0	1	1
15	0	0	1	0	1	1
16	1	0	1	0	0	1
17	0	0	1	1	1	1

TRUTH TABLE

THIS IS NOT STRICTLY A FUNCTIONAL TRUTH TABLE; I.E., IT DOES NOT SHOW ALL POSSIBLE MODES OF OPERATION. IT IS USEFUL FOR DC TESTING.

1. X INDICATES OUTPUT STATE UNKNOWN.
2. U1 AND D1 OUTPUTS ARE SEQUENTIAL; I.E., THEY MUST BE SEQUENCED IN ORDER SHOWN.
3. U1 AND D2 OUTPUTS ARE COMBINATIONAL; I.E., THEY NEED ONLY INPUTS SHOWN TO OBTAIN OUTPUTS.

DESCRIPTION: This integrated circuit consists of two digital phase detectors, a charge pump and an amplifier. It may be used in a broad range of phase-locked loop applications. The circuit accepts TTL waveforms at the R & V input. It generates an error voltage that is proportional to the frequency and/or phase difference of the input signals. Phase detector #1 is intended for use in systems requiring zero frequency and phase difference at lock. Phase detector #2 is used if quadrature lock is desired. Phase detector #2 can also be used to indicate that the main loop, utilizing phase detector #1, is out of lock.

Figure 3-15. Integrated Circuit — Phase-Frequency Detector (MC4344DCBS). Part No. 48P226446-01

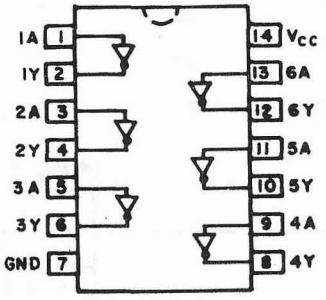

TRUTH TABLE EACH INVERTER	
INPUT	OUTPUT
A	Y
L	H
H	L

DESCRIPTION: This integrated circuit is a TTL bipolar digital inverter. Its low output impedance provides low noise susceptibility and drives high capacity loads. Power dissipation is relatively insensitive to operating frequency.

Figure 3-16. Integrated Circuit - - Schottky TTL Bipolar Digital Hex Inverter (54S04). Part No. 48P226448-01.

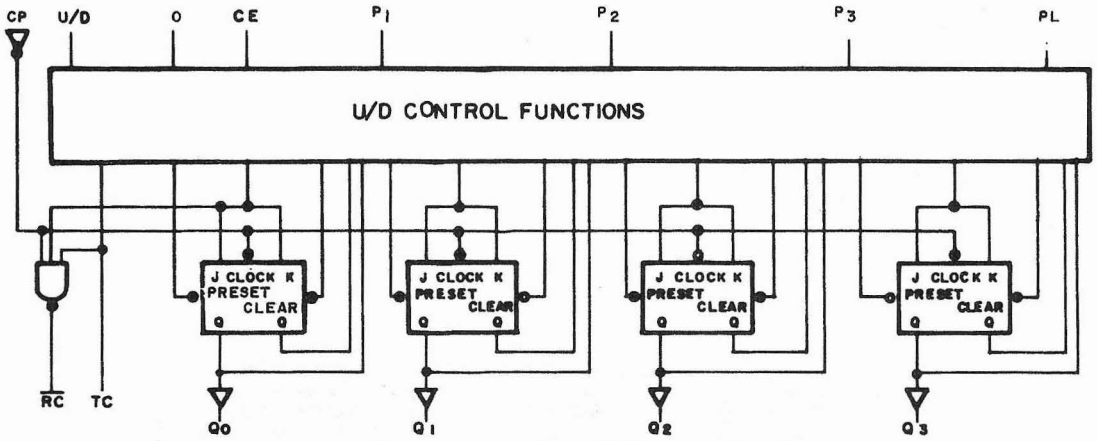

LOGIC DIAGRAM

INPUT LOADING/FAN-OUT

PIN NAMES	DESCRIPTION
$\overline{CE}$	COUNT ENABLE INPUT (ACTIVE LOW)
CP	CLOCK PULSE INPUT (ACTIVE RISING EDGE)
P_0 - P_3	PARALLEL DATA INPUTS
$\overline{PL}$	ASYNCHRONOUS PARALLEL LOAD INPUT (ACTIVE LOW)
$\overline{U}/D$	UP/DOWN COUNT CONTROL INPUT
Q_0 - Q_3	FLIP-FLOP OUTPUTS
$\overline{RC}$	RIPPLE CLOCK OUTPUT (ACTIVE LOW)
TC	TERMINAL COUNT OUTPUT (ACTIVE HIGH)

MODE SELECT TABLE

INPUTS				MODE
$\overline{PL}$	$\overline{CE}$	$\overline{U}/D$	CP	
H	L	L	⌐	COUNT UP
H	L	H	⌐	COUNT DOWN
L	X	X	X	PRESET (ASYN)
H	H	X	X	NO CHANGE (HOLD)

$\overline{RC}$ TRUTH TABLE

INPUTS			OUTPUT
$\overline{CE}$	TC*	CP	$\overline{RC}$
L	H	⌐⌐	⌐⌐
H	X	X	H
X	L	X	H

*TC IS GENERATED INTERNALLY
H = HIGH VOLTAGE LEVEL
L = LOW VOLTAGE LEVEL
X = IMMATERIAL

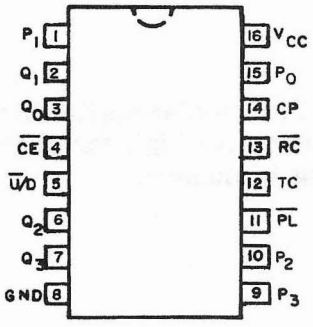

DESCRIPTION: The 54F191 is a reversible BCD (8421) binary counter featuring synchronous counting and asynchronous presetting. The preset feature allows the 54F191 to be used in programmable dividers. The Count Enable input, the Terminal Count output and the Ripple Clock output make possible a variety of methods of implementing multistage counters. In the counting modes, state changes are initiated by the rising edge of the clock pulse.

Figure 3-17. Integrated Circuit - - Schottky TTL Synchronous Up-Down Binary Coded Binary Counter (54F191). Part No.48P228739-01.

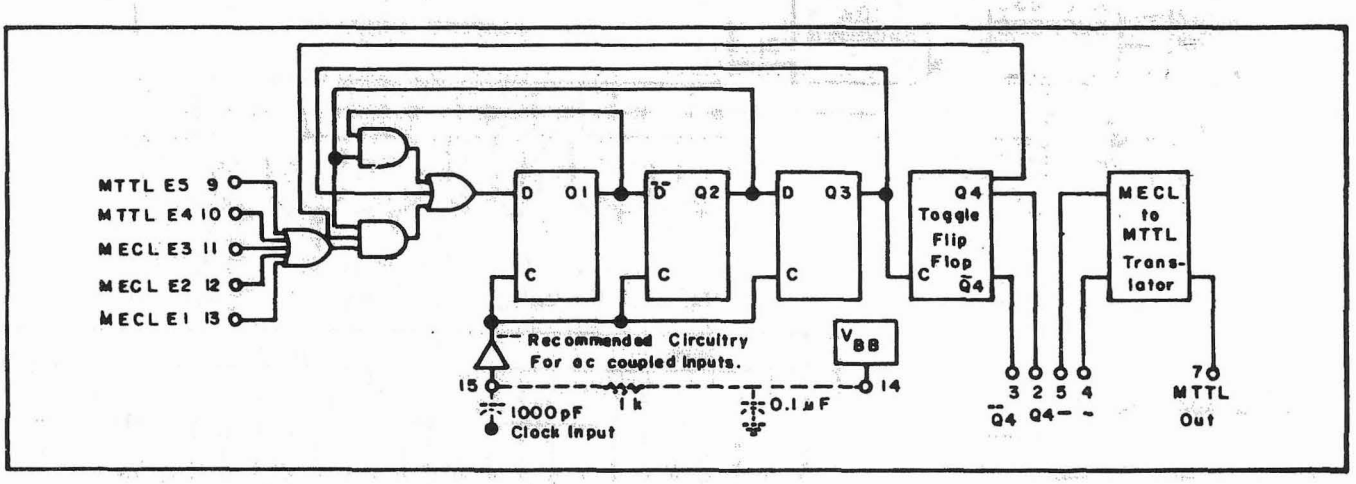

LOGIC DIAGRAM

Q1	Q2	Q3	Q4
1	1	1	1
0	1	1	1
0	0	1	1
0	0	0	1
1	0	0	1
1	1	0	1
0	1	1	0
0	0	1	0
0	0	0	0
1	0	0	0
1	1	0	0

ENABLE=0

ENABLE=1

NOTES:
ENABLES-1
THE STATE OF THE ENABLE IS IMPORTANT ONLY FOR THE POSITIVE CLOCK TRANSITION WHEN THE COUNTER IS IN STATE 1100.

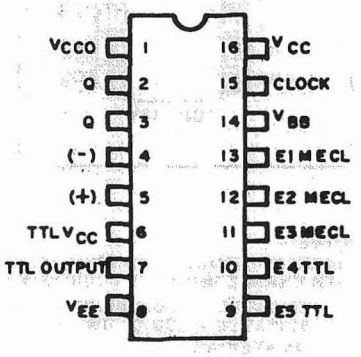

DESCRIPTION: These devices are two-modulus prescalers which will divide by 5 and 6, 8 and 9, and 10 and 11, respectively. Their primary application is as a high-speed variable modulus prescaler in the divide by N section of a phase-locked loop synthesizer used as the local oscillator of two-way radios. Division by 5, 8, or 10 occurs when any one or all of the five gate inputs E1 through E5 are high. Division by 6, 9, or 11 occurs when all inputs E1 through E5 are low.

Figure 3-18. Integrated Circuit - - Two-Modulus Prescaler (MC12513). Part No. 48P226458-01

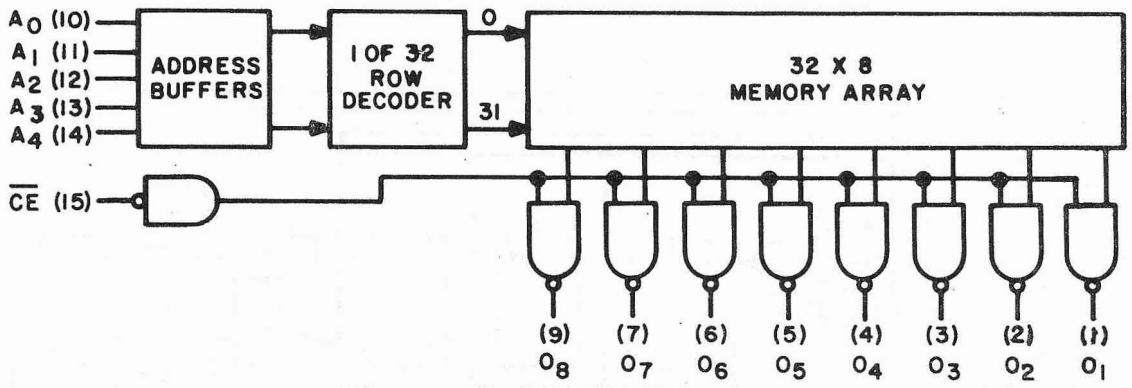

PIN CONFIGURATION

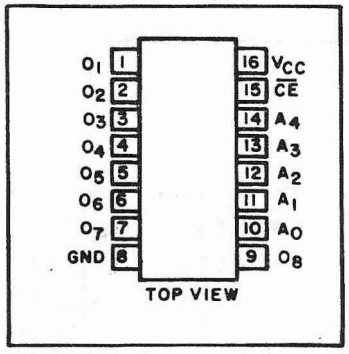

NOTES:
PROGRAM READOUT CAN ONLY BE ACCOMPLISHED WITH ENABLE INPUT AT LOGIC LOW LEVEL.
"1" INDICATES A LOGIC HIGH.
"0" INDICATES A LOGIC LOW.
"X" IMMATERIAL.

INPUT					OUTPUT							
A_4	A_3	A_2	A_1	A_0	O_8	O_7	O_6	O_5	O_4	O_3	O_2	O_1
0	0	0	0	0	0	0	1	0	0	0	0	0
0	0	0	0	1	0	0	0	1	1	0	0	1
0	0	0	1	0	0	0	0	1	1	0	0	1
0	0	0	1	1	0	0	0	1	0	1	1	1
0	0	1	0	0	0	0	0	1	0	1	1	0
0	0	1	0	1	0	0	0	1	0	1	0	1
0	0	1	1	0	0	0	0	1	0	1	0	1
0	0	1	1	1	0	0	0	1	0	0	1	0
0	1	0	0	0	0	0	0	1	0	0	0	1
0	1	0	0	1	X	X	X	X	X	X	X	X
0	1	0	1	0	X	X	X	X	X	X	X	X
0	1	1	0	0	X	X	X	X	X	X	X	X
0	1	1	0	1	X	X	X	X	X	X	X	X
0	1	1	1	0	X	X	X	X	X	X	X	X
0	1	1	1	1	X	X	X	X	X	X	X	X
1	0	0	0	0	0	0	0	1	1	0	0	1
1	0	0	0	1	0	0	0	1	1	0	0	1
1	0	0	1	0	0	0	0	1	0	1	1	0
1	0	0	1	1	0	0	0	1	0	1	1	0
1	0	1	0	0	0	0	0	1	0	1	0	1
1	0	1	0	1	0	0	0	1	0	1	0	1
1	0	1	1	0	0	0	0	1	0	0	1	0
1	0	1	1	1	0	0	0	1	0	0	1	0
1	1	0	0	0	0	0	0	1	0	0	0	1
1	1	0	0	1	0	0	0	1	0	0	0	1
1	1	0	1	0	X	X	X	X	X	X	X	X
1	1	0	1	1	X	X	X	X	X	X	X	X
1	1	1	0	0	X	X	X	X	X	X	X	X
1	1	1	0	1	X	X	X	X	X	X	X	X
1	1	1	1	0	X	X	X	X	X	X	X	X
1	1	1	1	1	X	X	X	X	X	X	X	X

DESCRIPTION: The 82S123 IC is a 256-bit bipolar field programmable PROM (programmable read-only memory). That is, custom patterns are immediately available by following a given fusing procedure. The device is designed for such applications as prototyping/volume production, sequential controllers, format conversion, hardwired algorithms, random logic, and code conversion. It features either open collector or tri-state outputs for optimization of word expansion in fused organizations.

Figure 3-19. Integrated Circuit - - PROM - 32 Words of 8-Bits/Word (82S123). Part No. 48P228344 (M38510/20702).

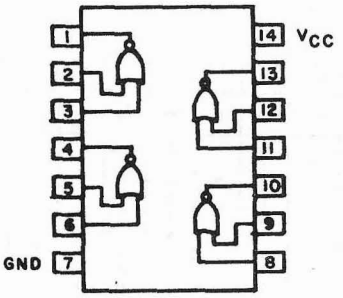

TRUTH TABLE EACH GATE		
INPUTS		OUTPUT
H	H	L
H	L	L
L	H	L
L	L	H

DESCRIPTION: Employing TTL to achieve high speed at moderate power dissipation, this quad 2-input NOR gate, digital integrated circuit provides high noise immunity, low output impedance, good capacitive drive capability and minimal variation in switching times with temperature.

Figure 3-20. Integrated Circuit - - Schottky Quad 2-input NOR Gates (54S02). Part No. 48P226451-01.

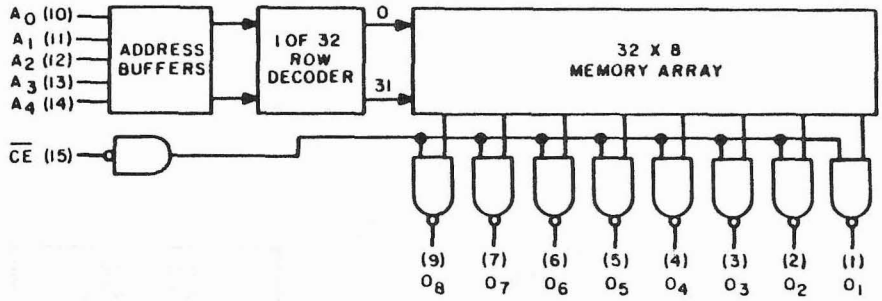

PIN CONFIGURATION

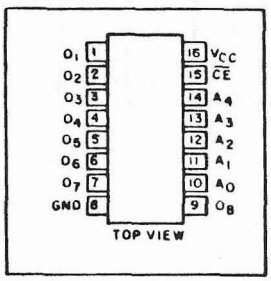

NOTES:
PROGRAM READOUT CAN ONLY BE ACCOMPLISHED WITH ENABLE INPUT AT LOGIC LOW LEVEL.
"1" INDICATES A LOGIC HIGH.
"0" INDICATES A LOGIC LOW.
"X" IMMATERIAL, FOR IC'S MARKED P; FOR IC'S MARKED Q, X'S ARE CHANGED TO 0'S.

INPUT					OUTPUT							
A_4	A_3	A_2	A_1	A_0	O_8	O_7	O_6	O_5	O_4	O_3	O_2	O_1
0	0	0	0	0	X	X	X	X	X	X	X	X
0	0	0	0	1	1	0	1	0	0	1	0	1
0	0	0	1	0	0	0	1	0	0	0	1	1
0	0	0	1	1	1	0	1	0	0	1	0	1
0	0	1	0	0	0	1	0	0	0	0	1	1
0	0	1	0	1	X	X	X	X	X	X	X	X
0	0	1	1	0	1	0	0	0	0	0	0	1
0	0	1	1	1	1	0	0	0	0	1	0	1
0	1	0	0	0	0	1	0	0	0	1	1	1
0	1	0	0	1	0	1	0	0	0	0	1	1
0	1	0	1	0	X	X	X	X	X	X	X	X
0	1	0	1	1	X	X	X	X	X	X	X	X
0	1	1	0	0	1	0	0	0	1	0	0	1
0	1	1	0	1	X	X	X	X	X	X	X	X
0	1	1	1	0	X	X	X	X	X	X	X	X
0	1	1	1	1	1	1	0	0	0	1	0	0
1	0	0	0	0	1	1	0	0	0	1	1	0
1	0	0	0	1	1	1	0	0	0	1	1	0
1	0	0	1	0	X	X	X	X	X	X	X	X
1	0	0	1	1	1	0	0	0	1	0	1	0
1	0	1	0	0	0	0	1	0	1	0	1	1
1	0	1	0	1	X	X	X	X	X	X	X	X
1	0	1	1	0	X	X	X	X	X	X	X	X
1	0	1	1	1	X	X	X	X	X	X	X	X
1	1	0	0	0	1	0	0	1	0	0	0	1
1	1	0	0	1	X	X	X	X	X	X	X	X
1	1	0	1	0	0	0	1	0	0	0	1	1
1	1	0	1	1	X	X	X	X	X	X	X	X
1	1	1	0	0	X	X	X	X	X	X	X	X
1	1	1	0	1	0	0	0	1	0	0	1	1
1	1	1	1	0	X	X	X	X	X	X	X	X
1	1	1	1	1	X	X	X	X	X	X	X	X

DESCRIPTION: The 82S123 IC is a 256-bit bipolar field programmable PROM (programmable read-only memory). That is, custom patterns are immediately available by following a given fusing procedure. The device is designed for such applications as prototyping/volume production, sequential controllers, format conversion, hardwired algorithms, random logic, and code conversions. It features either open collector or tri-state outputs for optimization of word expansion in fused organizations.

Figure 3-21. Integrated Circuit - - PROM - 32 Words of 8-Bits/Word (82S123). Part No. 48P228882-01.

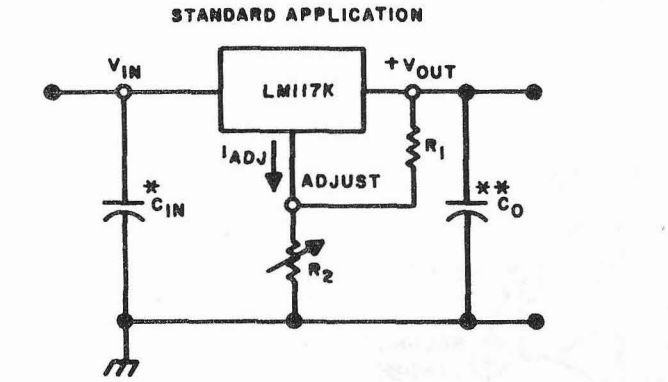

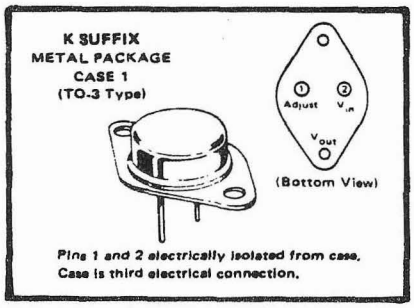

DESCRIPTION: The LM117 is an adjustable 3-terminal positive voltage regulator capable of supplying in excess of 1.5 A over an output voltage range of 1.2 V to 37 V. These voltage regulators require two external resistors to set the output voltage. In addition, they employ internal current limiting, thermal shutdown and safe area compensation, to make them essentially blow-out proof.

The LM117 series serve a broad variety of applications including local, on-card regulation. This device also makes a simple adjustable switching regulator, a programmable output regulator; or, by connecting a fixed resistor between the adjustment and output, it can be used as a precision current regulator. Like any feedback circuit, certain values of external capacitance can cause excessive ringing. An output capacitor (C_O) swamps this effect and ensures stability.

Figure 3-22. Integrated Circuit - - Positive Adjustable Voltage Regulator (LM117K). Part No. 48P228697-01.

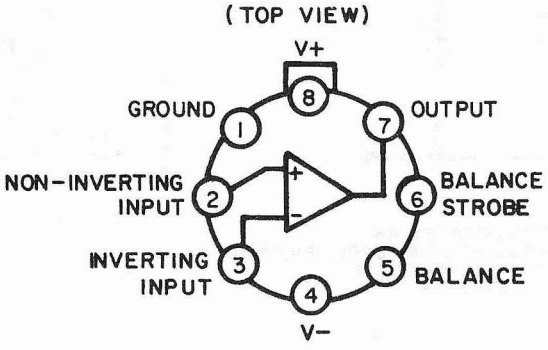

NOTE: PIN 4 CONNECTED TO CAN.

CONNECTION DIAGRAM
8-LEAD METAL CAN

TRUTH TABLE		
V_{IN}	STROBE	OUTPUT
+	H	H
+	L	L
−	H	L
−	L	L

DESCRIPTION: The LM111 IC is a monolithic, low current voltage comparator designed to operate over a wide range of supply voltages, from standard ±15V op amp supplies down to the single 5V supply used for IC logic. Its output is compatible with RTL, DTL and TTL as well as MOS circuits. It is capable of switching voltages up to 50V and currents as high as 50 mA. Both the inputs and the outputs of the LM111 can be isolated from system ground, and the output can drive loads referred to ground, the positive supply or the negative supply. Offset balancing and strobe capability are provided and outputs can be wire OR'ed.

Figure 3-23. Integrated Circuit - - Low Current, Wide Voltage Range Voltage Comparator (LM111H). Part No. MIL-M-38510/10304B.

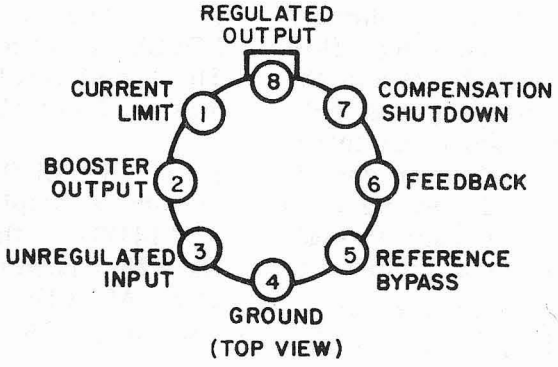

CONNECTION DIAGRAM
8-LEAD METAL CAN

DESCRIPTION: The LM105 IC is a monolithic positive voltage regulator with an extra gain stage for improved regulation. Its biasing circuitry design removes any minimum load current requirement and at the same time reduces standby current drain, permitting higher voltage operation. This device provides an output voltage adjustable from 4.5V to 40V and features fast response to both load and line transients, freedom from oscillations with varying resistive and reactive loads and the ability to start reliably on any load within rating.

Figure 3-24. Integrated Circuit - - Positive Voltage Regulator (LM105H). Part No. 48P226461-01.

3-127. Since the operating controls, indicators and connectors are mounted on the front panel, which in turn attaches to the chassis assembly, the schematic information for those items also appears in figure 5-32. Operation and use of the various segments of multisection controls are discussed in conjunction with the signal flow diagram discussions earlier in this chapter. Figure 5-32 identifies the input and output signals/voltages for this equipment at their respective entry or exit connectors. Full description of the main and secondary signal flows between the assemblies of the chassis assembly is provided by the receiver overall function block diagram (Figure 3-1), the signal flow diagrams (Figures 5-1 through 5-13) and the power distribution diagrams (Figures 5-14 through 5-18). Figure 5-32 shows all interconnection and wiring information on chassis assembly interconnections and may be used when following a signal or wiring through several functional sections of the equipment.

3-128. POWER CONTROL AND DISTRIBUTION. Figure 5-32, sheet 1, shows the primary power supply circuits and Control Assembly A2A13. This power supply circuitry contains several separate rectifier/filter circuits and the +20 volt regulator circuit. Rectifier circuit A2A13CR1 through A2A13-CR4 produces the +110 V output from A2-A13. Filtering of the +110 V is accomplished by A2L1 and A2C1 on the chassis assembly. Rectifier A2CR9 produces the +28 V output, which, after filtering through A2L2, is connected through MODE SELECTOR Switch A2A14S2C-F (section C, front) contacts 6 and 7 to terminal A2E15 in all positions of the MODE SELECTOR switch except OFF. From A2E15 the +28 V is applied through A2A13J1-7, contacts A2A13K1A2 and A2-A13K1A3 of the tune relay and through the contact A2P25-5 to the +20 V series regulator A2U1 and to A2E11.

3-129. A third conventional, full-wave bridge rectifier circuit, in Control Assembly A2A13, is comprised of A2A13CR8 through A2A13CR11. This circuit produces a negative dc output that is regulated by zener diodes A2A13CR12 and A2A13CR13, to produce the -30 V output at terminal A2A14E8.

3-130. The Meter Driver Assembly A2A14-A12 amplifies the selected LSB or USB audio signal, which is switched, after appropriate amplification and detection for a properly calibrated measurement, to front panel meter A2A14M1. This measurement is a relative value of calibration output measured in dBm. The signal from the IF/Audio Amplifiers enters either LSB or USB signal buffer U1B or U1C, respectively, which passes it to switch assembly A2A12S1 to gate the selected lower or upper sideband signal to amplification and detection circuitry. This circuitry is comprised of amplifier A2A14A12-U1A and bridge rectifier A2A14A12CR1-4. The signal level to the meter may be adjusted -10, +10, 0, or +20 dB by using the AUDIO LEVEL selector switch on the front panel. The signal level is then indicated in dBm on meter A2A14M1.

3-131. Panel illumination for frequency selection is supplied by lamps A2A14DS3 and A2A14DS4. The lamps are energized from the +28 V power supply applied through resistors A2A13R1 and A2A13R2 in Control Assembly A2A13.

3-132. RF INPUT STAGE PROTECTION. The circuits of Antenna Overload Assembly A2A9 are shown on figure 5-32, zone 43F. Rf signals from A2FL3 (Paragraph 3-5) are fed directly to this assembly where they are normally applied through the closed contacts of antenna overload relay A2A9K1 to RF Amplifier Assembly A2A4. Contacts A1 and A2 of A2A9K1, when closed, act to shunt resistor A2A9R10 out of the signal path. The input rf signals are also monitored by detector A2A9CR1 to control the bias of dc amplifier A2A9Q1. Amplifier A2A9Q1 is biased to be normally cut off for rf input levels less than approximately 5 Vrms. As long as this safe condition exists, relay driver A2A9Q2 will be forward-biased to energize A2A9K1 and the closed relay contacts will provide a low resistance rf signal path. If the rf input level to the receiver increases to approximately 5 Vrms (during operation of a nearby transmitting antenna for example) amplifier A2A9Q1 will conduct, cutting off relay driver A2A9Q2 and deenergizing relay A2A9-K1. With A2A9K1 deenergized, the relay contacts are open and resistor A2A9R10 provides approximately 40 dB attenuation of the rf signal.

3-133. 20 AND 30 MHz FILTERING. Also shown in figure 5-32, zone 33F, is the 20 and 30 MHz Filter Assembly A2A10. This assembly receives the output signal of RF Amplifier Assembly A2A4 at its A2A10C1 input and also receives hi-lo band control voltages from hi-lo filter relay A2A13K2. Regulated +20 V is applied to terminal A2A10E1 from A2A6P1-10 to produce +10 V at the junction of A2A10R2 and A2A10CR5.

3-134. During hi-band operation the input from hi/lo filter relay A2A13K2 contact B2 is a ground, so diodes A2A10CR2 and A2A10CR4 conduct to allow the rf input signal to pass through the hi-band filter (A2A10L3, A2A10C4, A2A10L5, A2A10C6). This filter rejects frequencies between 29.6 and 30.4 MHz, which is the hi-band IF. During lo-band operation the input from A2A13K2 is +20 V, which causes diodes A2A10CR1 and A2A10CR3 to conduct. The rf input signals then pass through the lo-band filter (A2A10C3, A2A10L2, A2A10L4, A2A10C5). This filter rejects frequencies between 19.5 and 20.4 MHz, which is the lo-band IF. Rf signals, after passing through the selected filter circuit of A2A10, are applied through A2A10C7 to the A2A6P3A1 input of the Translator/Synthesizer Assembly A2A6.

3-135. Hz TUNING CONTROL. Figure 5-32, zone 71A, shows the schematic diagram of the Hz control and Vernier Switch Subassembly A2A14A11. Selected sections of Hz switch A2A14A11S1, when placed to positions other than V (vernier), connect a nominal +4 V to combinations of the 2^0, 2^1, 2^2 and 2^3 gate control output lines. These gating-control voltages then select different counting ratios in the 10 kHz/1 kHz/100 Hz Synthesizer Subassembly (No. 1) A2A6A20 to provide 100 Hz incremental tuning changes.

3-136. Code converter A2A6A20U8 of the 10 kHz/1 kHz/100 Hz synthesizer receives the BCD levels from contacts of the Hz switch. See table 3-3 for identification of the switch contacts, which supply the logic "1" levels (+4 volts). The +4 V is supplied to switch A2A14A11S1B-front, contact 1 and A2A14A11S1B-rear, contact 1 from +4 V power supply terminal A2A14A11A1E6. With the Hz switch A2A14A11S1 in the V (vernier) position as shown in figure 5-32, voltage derived from the +4 V Power Supply Subassembly A2A14A11A1 is applied from Hz control A2A14A11R1 through A2A14A11S1A-front, contacts 10 and 11, to the vernier control line input to the Frequency Generator Subassembly A2A6A16. Continuous variation of the A2A14A11R1 voltage then permits continuous tuning variation over a 1000 Hz range.

3-137. When the Hz switch A2A14A11S1 is placed to the V (vernier) position, +110 V is supplied through A2A14A11S1B-front, contacts 6 and 7, to terminal A2A14A11A1E9. This voltage, when applied through A2A14A11A1R7 and A2A14A11A1R6 to A2A14A11A1E8, causes the front panel vernier indicator A2A14DS5 to illuminate. This lamp notifies the equipment operator that the vernier tuning mode is selected and that the receiver is not phase-locked to the output of Frequency Standard Assembly A2A5.

Table 3-3. Preset Counter Logic Codes (BCD)

SWITCH A2A14A11S1B CONTACTS

GATE CONTROL CODES	FRONT	REAR
2^0 (1)	-	2, 8, 10 or 12
2^1 (2)	-	3 or 4
2^2 (4)	11	-
2^3 (8)	4	-

3-138. MODE SELECTOR ASSEMBLY A2A1 (Figure 5-33). The Mode Selector Assembly A2A1 contains three separate subassemblies: Mode Gate A2A1A1, Beat Frequency Oscillator and Amplifier A2A1A3 and 500 kHz Gate A2A1A2.

3-139. MODE GATE SUBASSEMBLY. Input to the Mode Gate Subassembly A2A1A1 consists of the IF signal from RF Translator Subassembly A2A6A8 via A2XA1P1A1. The 500 kHz IF frequency is applied to the filter network A2A1FL1 through A2A1FL3, through emitter follower A2A1A1Q1, switches A2A1A1Q2 or A2A1A1Q3 and ungated amplifier A2A1A1Q4. When USB audio is required and a USB signal is being received, the +20 V on pin 1 of A2XA1P1 turns on

A2A1A1Q2, passing the signal through USB filter A2A1FL1 to output amplifier A2A1A1Q5.

3-140. The IF signal output of A2A1A1Q5 passes through A2A1P1A3 to the input of IF/Audio Amplifier Assembly A2A2 via A2XA1P1A3. During the USB mode, A2A1-E12 is at ground potential shutting off A2A1A1Q3 and blocking the signal to A2A1-FL2.

3-141. In AM mode, A2A1A1E12 is at +20 V and A2A1A1E14 is at ground potential shutting off A2A1A1Q2 and turning on A2A1A1CR2, A2A1A1Q3 and A2A1A1CR3. The IF signal therefore passes through filter A2A1FL2 but not through A2A1FL1, to amplifier A2A1A1Q6 and input of IF/Audio Amplifier Assembly A2A2 via A2XA1P1A3.

3-142. During LSB mode, both A2A1A1E12 and A2A1A1E14 are at ground potential, shutting off A2A1A1Q2 and A2A1A1Q3. The IF input signal is applied through Amplifier A2A1A1Q4 to A2A1FL3, which passes only the LSB components of the composite IF input signal. This LSB-IF signal is then passed through A2A1A1Q7 to the IF/Audio Amplifier Assembly A2A3 via A2XA1P1A2.

3-143. BEAT FREQUENCY OSCILLATOR AND AMPLIFIER SUBASSEMBLY. The BFO and Amplifier Subassembly A2A1A3 contains a variable frequency oscillator A2A1A3Q1 whose output center frequency is 500 kHz. BFO Oscillator A2A1A3Q1 plus buffers A2-A1A3Q2 and A2A1A3Q3 are biased to cutoff by a ground at A2A1A3E3 via A2XA1P2-2 in all modes except CW. In CW, +20 V is applied at E3 turning on oscillator A2A1A3Q1 and buffers A2A1A3Q2 and A2A1A3Q3. The oscillator output is fed from the emitter of A2A1A3Q1 through the buffer amplifier consisting of A2A1A3Q2 and A2A1A3Q3 to output connector A2XA1P2A4 and on to the IF/Audio Amplifier Assembly A2A2 only, because this amplifier processes the IF carrier signal during the CW mode of operation.

3-144. An interior adjustment of coil A2-A1A3L1 produces a BFO center frequency of 500 kHz at a voltage across A2A1A3R1 of +7.5 V to +20 V, controlled by A2A14R6 on the front panel. During CW operation, changing the voltage across A2A1A3R1 and CR1 by A2A14R6 control can change the oscillator frequency to produce the most satisfactory tone.

3-145. 500 kHz GATE SUBASSEMBLY A2-A1A2. The third subassembly of the mode selector, the 500 kHz gate enables or disables the 500 kHz injection signals to the demodulation circuits during SSB modes of operation. A 500 kHz stable-frequency signal from Frequency Standard Assembly A2A5 enters the 500 kHz mode gate circuit at terminal A2A1A2E6. Biasing of diode A2A1A2-CR1 is controlled by dividers A2A1A2R1-R6-R5 and A2A1A2R2-R3-R4. In AM and CW modes A2A1A2CR1 is biased off and A2A1-A2E5 is at ground potential. During SSB modes, input to A2A1A2E5 will be +20 V. This will forward-bias diode A2A1A2CR1 and allow the 500 kHz input signal to pass through the gating circuits to output connectors A2A1P2A3 and A2A1P2A1. From these connectors, the signal is fed to the 500 kHz injection inputs of both IF/Audio Amplifier Assemblies A2A2 and A2A3, which contain the demodulation circuits.

3-146. IF/AUDIO AMPLIFIER ASSEMBLIES A2A2 and A2A3 (Figure 5-34). IF/Audio Amplifier Assemblies A2A2 and A2A3 are identical in their circuitry. The only differences are in the specific inputs received and therefore the specific outputs produced by each assembly. Assembly A2A2 receives USB IF signals during modes for which USB intelligence exists. Assembly A2A3 receives LSB IF signals during any mode for which LSB intelligence exists. In general, only assembly A2A2 is discussed below. Each IF/audio amplifier contains four types of circuits: IF signal amplifiers, audio amplifiers, demodulation circuits and automatic gain control (AGC) circuits. Circuit operation for the first three types is described individually for the SSB modes of operation, the AM mode and the CW mode. The MGC/AGC circuits, which are relatively independent of the others, are described separately.

3-147. SSB MODES OF OPERATION (Figure 5-34). The 500 kHz IF input signal to IF/Audio Amplifier Assembly A2A2 from the Mode Selector Assembly A2A1 gating circuits enters the IF/audio amplifier at

A2A2P1A3. From this point, it passes through four tuned IF amplifiers (A2A2A2Q1, Q4, Q5, Q6) and is converted to a balanced two-line output by A2A2A2T4. The balanced IF output from the secondary of transformer A2A2A2T4 is applied to terminals A2A2A3-E12 and A2A2A3E10, which are the inputs to the demodulation circuits. For SSB signals (all modes of operation except AM and CW) the balanced IF signal is applied to the bases of product detector stages A2A2A3Q1 and A2A2A3Q2, as the push-pull input. The 500 kHz injection signal for the product detector stages is supplied from the gating stage of the Mode Selector during all SSB operating modes. This signal is applied through A2A2-A3R1, A2A2A3R3, A2A2A3C1 and A2A2A3-C4 to the emitters of the product detector stages. Note that this input is in phase to both sections of the product detector.

3-148. The audio output from product detectors A2A2A3Q1 and A2A2A3Q2, representing the demodulated intelligence information, is applied from A2A2A3T1 to output point A2A2P1-4. From this point the audio is applied to the front panel USB LINE LEVEL control A2A14R2 (from assembly A2A2) or LSB LINE LEVEL control A2A14R1 (from A2A3), which allows adjustment of the ultimate output signal from the equipment. From the line-level control, the audio is returned to the IF/audio amplifier at A2A2P1-6. It is applied to audio amplifier A2A2A2Q7 and through emitter follower A2A2A2Q8 to the primary of transformer A2A2A2T5. The secondary of A2A2A2T5 produces 180° out-of-phase signals to the bases of push-pull amplifiers A2A2A2Q9 and A2A2A2Q10.

3-149. The amplified audio output signal at the secondary of transformer A2A2T1 is then applied to two places. A balanced line audio output is applied from A2A2T1-4/6 through A2A2P1-12/14 and through the wiring of the chassis/panel assembly and Filter Box Assembly A1A1, to output connectors on the rear of the equipment. This output is connected to external equipment as required and to the Meter Driver Subassembly A2A14A12. The second output from A2A2T1 is from terminal 7. It is applied through A2-A2P1-3 and through chassis/panel assembly wiring to PHONE USB jack A2A14J2 (from assembly A2A2) or PHONE LSB jack A2A14 J1 (from A2A3) on the equipment front panel for local operator use.

3-150. AM MODE OF OPERATION. During the AM mode of operation the IF input signal to the IF/ Audio Amplifier A2A2 enters as previously described for USB operation and passes through the IF amplifier stages A2-A2A2Q1, A2A2A2Q4, A2A2A2Q5 and A2A2-A2Q6. During the AM mode the product detector stages A2A2A3Q1 and A2A2A3Q2 do not operate because +20 V is not applied from A2A2P1-18. The IF signal input to A2-A2A3E10 is fed through an additional IF amplifier stage, A2A2A3Q3, to the input of AM demodulation diode A2A2A3CR2. This diode detector applies the resulting audio signal to the base of audio amplifier A2A2A1Q9. Output audio from cascaded audio amplifiers A2A2A1Q9 and A2A2A1Q14 is applied through A2A2P1-4 to the front-panel USB LINE LEVEL control A2A14R2. The audio path from the USB LINE LEVEL control is identical to that previously described for the USB mode of operation.

3-151. During the AM mode of operation, IF amplifier A2A2A3Q3 and audio amplifiers A2A2A1Q9 and A2A2A1Q14 are made operative by +20 V received from A2A2P1-17. For SSB modes no dc voltage is applied through A2A2P1-17 and the AM demodulation stages are inoperative.

3-152. CW MODE OF OPERATION. The AM demodulation stages are also used for the CW mode. However, a beat frequency oscillator (BFO) signal is also necessary. The BFO signal is applied only to IF/ Audio Amplifier A2A2 at connector A2A2P1A1. The BFO signal (nominally 500 kHz, but variable by the front panel BFO control A2A14R6) is applied to the AM detector diode A2A2A3CR2 through A2A2A3C8. In the diode detector the BFO signal subtractively mixes with the IF carrier signal to produce the beat frequency required. This audio beat frequency is then applied through the audio amplifier stages A2A2A1Q9 and A2A2A1Q14 in the same manner as AM audio previously described. IF/Audio Amplifier Assembly A2A3 does not receive the BFO input signal at A2A3P1A1, nor do the AM detector/amplifier stages of A2A3 ever receive the enabling +20 V from A2A3P1-17. This is because

assembly A2A3 is used only during LSB and ISB modes during which only the product detector circuits are required.

3-153. AUTOMATIC GAIN CONTROL CIRCUITS (Figure 5-34). The AGC circuits of the IF/Audio Amplifier Assembly A2A2 or A2A3 produce positive AGC voltages, which are applied to IF stages within the same assembly and negative AGC voltages, which are fed to stages of the RF Amplifier Assembly A2A4 to control gain of those stages. The majority of the AGC circuits are contained on AGC Audio Amplifier Subassembly A2A2A1 or A2A3A1. The remaining AGC stages are A2A2A2Q2 and A2A2A2Q3. Since the AGC circuits operate similarly in both assemblies, only assembly A2A2 is described in the following paragraphs.

3-154. The 500 kHz IF signal from the output of IF Amplifier A2A2A2Q4 is applied via A2A2A2T2 and A2A2A1C4 to IF amplifier A2A2A1Q8, the input stage to the AGC circuits. The gain of this amplifier is set by the AGC ADJ potentiometer A2A2A1R25. Further amplification of the 500 kHz sample is provided by transistor A2A2A1Q7 whenever this amplifier is receiving emitter voltage via switch A2A2A1Q13. Switch A2A2A1Q13 will be in conduction, as controlled by preamplifier A2A2A1Q12, when the front panel MGC/AGC switch A2A14S3 is in either the FAST or SLOW position. When the AGC switch is in the MGC position, ground potential is applied to the base of preamplifier A2A2A1Q12, turning it off. This condition allows switch A2A2A1Q13 to be biased off, disabling amplifier A2A2A1Q7 and therefore, the entire AGC function.

3-155. When the AGC function is in use, two IF outputs of the same polarity but different amplitudes will be taken from the secondary of transformer A2A2A1T1. The larger of these two signals is rectified by detector A2A2A1CR5 to provide a charging potential for capacitor A2A2A1C5. The smaller signal is rectified by Detector A2A2A1CR4 to provide a charging potential for capacitor A2A2A1C3. The dc voltages on capacitors A2A2A1C5 and A2A2A1C13 provide base bias and emitter bias respectively, for coincidence detector A2A2A1Q6. When a relatively steady rf signal is being received, coincidence detector A2A2A1Q6 will be back-biased.

3-156. The voltage across capacitor A2A2A1C3 (or the parallel combination of capacitors A2A2A1C3 and C13) also serves as the base bias for emitter follower A2A2A1Q4. As the rf input signal increases, the IF Amplifier A2A2A1Q8 conducts beyond the level set by AGC control A2A2A1R25 and the voltage at the base of emitter follower A2A2A1Q4 will become more positive. The resulting increased conduction of emitter follower A2A2A1Q4 will cause a more positive dc voltage to be applied to the base of dc amplifier A2A2A1Q3. The output of the emitter of dc amplifier A2A2A1Q3 is applied to the IF/Audio Amplifier Subassembly A2A2A2 as its AGC control voltage becomes more positive. The result of applying this increasingly positive AGC voltage is to reduce the gain of the IF amplifier chain to maintain a nearly constant IF signal level to the demodulating circuits. A decrease in the elevated rf input signal level will result in a decrease in the IF AGC voltage to increase the gain of the IF amplifier chain until the level set by AGC control A2A2A1R25 is reached. Beyond that level the IF amplifier chain operates at full gain as determined by each stage.

3-157. If the rf signal is interrupted or suddenly drops to a much lower level, capacitor A2A2A1C5 begins to discharge through resistor A2A2A1R19 while capacitors A2A2A1C3 and A2A2A1C13 discharge through resistor A2A2A1R13 and transistor A2A2A1Q6. Capacitor A2A2A1C5 discharges first. When the charge on this capacitor drops to a potential which will permit conduction in A2A2A1Q6, capacitors A2A2A1C3 and A2A2A1C13 discharge through A2A2A1Q6, thereby establishing the AGC hang time and decay time. The hang time is the interval between loss of signal and the turn on of A2A2A1Q6. Decay time is the discharge time of A2A2A1C3 and A2A1A1C13. The hang time is of sufficient duration so that the potential difference across A2A2A1C3 remains relatively constant during the reception of intermittent voice signals. Whenever rf input resumes at a normal level, coincidence detector A2A2A1Q6 will be immediately reset (biased off).

3-158. The AGC voltage applied to the RF Amplifier Assembly A2A4 is generated

through the action of dc amplifiers A2A2A1-Q1 and A2A2A1Q2. As a result of an increase in rf input signal level, conduction of dc amplifier A2A2A1Q3 will increase, causing an increase in the forward-biasing voltage on the base of dc amplifier A2A2A1-Q2. This in turn will raise the base voltage on dc amplifier A2A2A1Q1 and the resulting decreased conduction of this stage will cause the collector to go to a more negative dc voltage. The collector voltage of dc amplifier A2A2A1Q1 is applied through diode A2-A2A1CR1 to RF Amplifier Assembly A2A4, where the application of the more negative AGC voltage to the control grids of the two rf amplifier tubes reduces their gain. A decrease in the rf input signal level will result in a less negative AGC voltage, raising the gain of the rf amplifiers. Diode A2A2A1CR1 prevents any positive dc levels from being applied to the rf amplifier circuits.

3-159. When an extremely low rf input signal (at or near the threshold of receiver sensitivity) is being received, dc amplifier A2-A2A1Q2 will be slightly back-biased and dc amplifier A2A2A1Q1 will be at maximum conduction. Under this condition of extremely low input signal, it is not desirable to apply any negative AGC voltage to the rf amplifiers until a stronger signal is being received. The desired delay in applying any AGC to the rf amplifiers is provided by AGC threshold diodes A2A2A1CR2 and A2A2A1-CR3 in series with the emitter of dc amplifier A2A2A1Q2. These diodes ensure that A2-A2A1Q2 is cut off during weak signal reception, so that the rf AGC voltage is zero and the gain of RF Amplifier Assembly A2A4 is maximum for all input signal levels below the AGC operating threshold.

3-160. Maximum sensitivity of the receiver for weak signal reception is provided by AGC threshold diodes A2A2A1CR2 and CR3 in series with the emitter of dc amplifier A2A2-A1Q2. These diodes delay application of the negative AGC voltage to RF Amplifier A2A4 until the input rf signal increases sufficiently to forward bias A2A2A1Q2, A2A2-A1CR2 and A2A2A1CR3. With dc amplifier A2A2-A1Q2 cut off, the AGC output voltage is zero and the receiver gain is maximum for all input rf signals below the AGC operating threshold.

3-161. With front panel MGC/AGC switch A2A14S3 placed to SLOW position, preamplifier A2A2A1Q11 is cut off and allows switch A2A2A1Q10 to be forward biased from the +20 V supply voltage. This action allows capacitor A2A2A1C12 to discharge through A2A2A1Q10. Since the discharge time of A2A2A1C12 is much longer than that of A2-A2A1C5, the hang time and decay time are greatly increased. In FAST AGC operation, preamplifier A2A2A1Q11 is forward biased and will cause switch A2A2A1Q10 to be turned off.

3-162. Manual control of rf and IF gain is provided when the front panel MGC/AGC switch A2A14S3 is placed to MGC position and a variable dc voltage is applied (at A2A2P1-21) to the base of amplifier A2A2-A1Q3. This dc voltage, from the GAIN control A2A14R3, controls conduction of dc amplifier A2A2A1Q3 and thereby controls the IF signal level to A2A2A2Q4 and the rf gain control from A2A2A1Q1.

3-163. RF AMPLIFIER ASSEMBLY A2A4 (Figure 5-35). The rf amplifiers A2A4V1 and A2A4V2 of RF Amplifier Assembly A2A4 are conventional tuned circuits capable of tuning over the range from 2.0 to 29.9999 MHz. The rf amplifier assembly tuning turret contains twenty-eight MHz bandpass filter coupling networks (subassemblies A2A4A2 through A2A4A29 depicted in figures 7-22 through 7-49). As indicated in Notes 3 and 7 of figure 5-35, portions of three of the the 28 turret subassemblies are used to tune a 1 MHz band (e.g., for 2-MHz tuning, subassemblies A2A4A20, A2A4A25 and A2A4A2 are involved). Selection of the appropriate portions of each of these turret subassemblies is accomplished by rotation of the MHz controls on the front panel.

3-164. In order to tune to the desired frequency within any 1-MHz band, the 100 kHz and 10 kHz controls are used to mechanically select grid and plate tank-capacitor subassemblies as shown in Notes 1, 2, 5 and 6 of figure 5-35. For example, in tuning to 550 kHz within any MHz band, capacitors C6 and C15 of subassembly A2A4A30, A2A4A33, A2A4A34 and A2A4A37 tune the 100-kHz increment (0.5 MHz) and capacitor C6 of subassemblies A2A4A31, A2A4A32, A2A4A35

and A2A4A36 tunes the 10-kHz increment (0.05 MHz).

3-165. The selection of the desired 1-MHz band is accomplished by rotating the front-panel MHz controls to the desired frequency. These controls are not mechanically connected to the turret. Instead, the controls rotate switch wipers in Code Generator Assembly A2A7. This results in an output from the code generator of a five-line code consisting of circuit grounds and opens (Table 3-2).

3-166. Refer to figure 5-19. A five-line combination for each frequency band is applied through contacts 1 through 5 of A2A4-P1 and from there to the turret decoder A2A4S1. Wafer A2A4S1A is the decoder and connects the ground(s) from the code generator to relay A2A4K1, which energizes and applies +28 V to motor A2A4B1 (via relay contacts A2A4K1-A1 and A2A4K1-A2). As the motor drives the turret and the turret decoder, relay A2A4K1 remains energized until decoder A2A4S1A reaches a position where no ground is provided to the motor relay. For instance, if the code generator output is GOGOO where "G" is ground and "0" a circuit open, then decoder A2A4S1A will rotate until its contacts reflect an open-closed-open-closed-closed configuration on contacts A2A4S1A-1, 2, 3, 4 and 5. Since the ground for relay A2A4K1 is supplied by any grounded line from the code generator, the decoder switch A2A4S1A is rotated until its contacts all see open circuits for all grounded code lines. Wafer A2A4S1B is complementary to A2A4S1A and receives its inputs in parallel with A2A4S1A on code lines 1 through 5 from the Code Generator Assembly A2A7. Thus, when the input code lines are GOGOO, contacts A2A4S1B-1 through A2A4S1B-5 will be closed-open-closed-open-open as the complement of the A2A4S1A-1 through A2A4S1A-5 terminal connections. The purpose of switch wafer A2A4S1B is to provide reentrant ground paths for A2A4S1A via Code Generator Assembly A2A7. Code Generator Assembly A2A7 functions in such a way that all of the open circuit lines present at A2XA4P1-1 through A2XA4P1-5 corresponding to a given setting of the front-panel frequency controls are tied together. For example, if code line 1 assumes a circuit open for a new code -- say, OOGOO -- then the ground present on A2A4S1A-3 will connect to A2A4S1B-3, to A2A4S1B-1 to A2A4-S1A-2 (because A2A4S1A-2 connects through the code generator A2A7 to A2A4S1A-1, both being open) and since A2A4S1A-2 is closed, relay A2A4K1 will energize. Once turret rotation starts the turret will rotate until the turret assemblies A2A4A1 through A2A4A29 are positioned as required to connect the tuning elements that will tune the rf amplifier stages to the selected frequency band.

3-167. FREQUENCY STANDARD ASSEMBLY A2A5 (Figure 5-36). Frequency Standard Assembly A2A5 contains four subassemblies: Oscillator and Oven Control A2A5A1, Divider/Amplifier A2A5A2, Oven Body A2A5A3 and 5 MHz Reference Control A2A5A4. The A2A5A1 subassembly uses a temperature-controlled crystal oscillator to provide a stable 5 MHz reference frequency. Subassembly A2A5A4 monitors the 5 MHz signal from the A2A5A1 oscillator and the 5 MHz input from an external frequency standard. The A2A5A4 control circuitry automatically switches to the internal 5 MHz source if the external standard signal falls below a minimum level. The 5 MHz source selected by A2A5A4 is applied to Divider/-Amplifier Subassembly A2A5A2, which provides the 10 MHz, 5 MHz, 1 MHz and 500 kHz outputs of A2A5. A visual comparator circuit in A2A5A2 allows comparison of the internal crystal oscillator frequency to the input from an external standard.

3-168. INPUT CIRCUIT OPERATION (EXT NORMAL MODE). The external 5 MHz reference signal is applied to 5 MHz Reference Control Subassembly A2A5A4 via A2A5J3-1, terminated by A2A5A4R1 and coupled through current limiting resistor A2A5A4R2 and A2A5A4C1 to the base of amplifier A2-A5A4Q1. Operating bias for A2A5A4Q1 is established by resistors A2A5A4R3, A2A5-A4R5, A2A5A4R6 and temperature compensation diodes A2A5A4CR1 through A2A5-A4CR4.

3-169. When the external 5 MHz reference signal input at A2A5J3-1 is approximately 400 mVrms or greater, the amplified positive voltage swings developed by A2A5A4Q1

charge capacitor A2A5A4C2 through diode A2A5A4CR6. The time constant of A2A5A4C2 and A2A5A4Q2 base is such that A2A5A4C2 retains a positive charge sufficient to turn on A2A5A4Q2 and thus maintains A2A5A4U1A-1 at a logic high. Pull-up resistor A2A5A4R10 also places a logic high at A2A5A4U1A-2. This causes output pin 3 of A2A5A4U1A to be at a logic low and places A2A5A4U2D-12 at a logic high through the action of inverter A2A5A4U1B. Since A2A5A4U2D-13 is also high, a logic low appears at A2A5A4U2D-11 and A2A5A4U2B-5. Under this condition, the output of gate A2A5A4U2B-6 is always high and therefore gate A2A5A4U2C-10 remains at a logic high. Since A2A5A4U1C-9 is also at a logic high, the output of NAND gate A2A5A4U1C-8 will be an inversion of the amplified 5 MHz standard frequency at A2A5A4Q1 collector. NAND gate A2A5A4U2C-8 under this condition will output the external 5 MHz standard to Divider/Amplifier Subassembly A2A5A2. Because it is reverse biased, isolation diode A2A5A4CR5 in the path with A2A5A4R7 prevents sink current to A2A5A4U1A-3.

3-170. When the external 5 MHz reference signal at A2A5J3-1 drops below approximately 250 mVrms, as determined by the value of A2A5A4R3, the output level at the collector of A2A5A4Q1 is no longer sufficient to forward bias detector diode A2A5A4CR6. Capacitor A2A5A4C2 then discharges to ground through emitter follower A2A5A4Q2 until the voltage at the base of A2A5A4Q2 is insufficient for conduction and A2A5A4Q2 is cut off. Input pin 1 of A2A5A4U1A is then at a logic low level through emitter resistor A2A5A4R9. Output A2A5A4U1A-3 is high, A2A5A4U1B-6 is low, A2A5A4U2B-5 is high, so that the internal 5 MHz frequency standard from oscillator and oven control subassembly A2A5A1P5 appears at the output of gate A2A5A4U2B-6. Since A2A5A4U1C-9 is now low, A2A5A4U1C-8 output is held high, which allows NAND gate A2A5A4U2C to pass the internal 5 MHz frequency standard inverted through gate A2A5A4U2C-8 and on to Divider/Amplifier Subassembly A2A5A2 via A2A5J3-4 and A2A5A2E9A.

3-171. The output level of inverter A2A5A4U1B changes from logic high to logic low when A2A5A4Q2 is cut off, which switches A2A5A4Q4 from saturation to cut-off. The voltage at A2A5A4Q4 collector then forward biases the base of emitter follower A2A5A4Q3 and +20 V is supplied by A2A5A4Q3 emitter to input pin 1 of +20 V regulator A2A5A4U3. Zener diode A2A5A4CR7 prevents the base (thus emitter) voltage on A2A5A4Q3 from exceeding 30 V during transients. The +15 V output from pin 2 of A2A5A4U3 is routed through A2A5A4E5 and A2A5A3J-4 to Oscillator and Oven Control Subassembly A2A5A1 and the internal 5 MHz oscillator and oven control circuits are energized.

3-172. The internal 5 MHz oscillator output is applied through A2A5A3J1-5, A2A5A4E1 and inverter A2A5A4U2A to input pin 4 of A2A5A4U2B. Since logic high levels are now applied to A2A5A4U2B-5 and A2A5A4U2C-9, the internal 5 MHz signal is gated through A2A5A4U2B and A2A5A4U2C to Divider/-Amplifier Subassembly A2A5A2.

3-173. A2A5A4U1A-3 is at a logic high when A2A5A4Q2 is cut off by a low external signal level input. This logic high initiates a current flow through A2A5A4R7 and A2A5A4CR3 through A2A5A4CR5, which raises the bias level at A2A5A4Q1 base. This bias increase produces a hysteresis effect whereby an increase of the external signal level input to 400 mVrms is now required to switch back to external operation as described in paragraph 3-169.

3-174. INPUT CIRCUIT OPERATION (EXT OVEN STBY MODE). When 5 MHz OSC SOURCE switch A2A5A2S1 is set to EXT (OVEN STBY) circuit operation is the same as previously described, with the following exceptions. The emitter of A2A5A4Q4 is no longer grounded through contact 2 of A2A5A2S1. A2A5A4Q4 is off, turning A2A5A4Q3 on. +28 V is applied to input pin 1 of +15 V regulator A2A5A4U3. The oscillator and oven control circuits are energized continuously so the internal 5 MHz reference signal is immediately available if the external 5 MHz frequency standard fails.

3-175. INPUT CIRCUIT OPERATION (INT/COMP Mode). Setting switch A2A5A2S1 in the INT/COMP position applies +28 V power to regulator A2A5A4U3 in the same manner as described for the EXT (OVEN

STBY) mode. +20 V power is applied to the comparator circuit through A2A5A2S1-9. A2A5A2S1-3 is grounded by A2A5A2S1-C1, which grounds pin 2 of A2A5A4U1A and pin 13 of A2A5A4U2D. This condition sets the outputs of A2A5A4U1A and A2A5A4U2D at logic high. The logic high from A2A5A4U2D-11 is applied to A2A5A4U2B-5. This gates the internal 5 MHz oscillator signal from inverter A2A5A4U2A through A2A5A4U2B. The logic high at A2A5A4U1A-3 is inverted by A2A5A4U1B and applied to A2A5A4U1C-9. This prevents the external 5 MHz signal from reaching NOR gate A2A5A4U2C. The internal 5 MHz signal is gated by A2A5A4-U2B-6 through A2A5A4U2C to the A2A5A2 subassembly. The signal at A2A5A4U2B-6 also appears at phase detector A2A5A4U1D-12 for use in the comparator circuit.

3-176. OVEN CONTROL CIRCUIT OPERATION. The +10 V operating voltage for the oven control and oscillator circuits is derived from the +15 V output of A2A5A4U3 by a voltage regulator comprised of dropping resistor A2A5A1R9, zener diode A2A5A1CR1 and capacitor A2A5A1C7. The +10 V is applied to the resistance bridge consisting of A2A5A1R13 through A2A5A1R16 and A2A5-A3R2. +10 V is also applied to A2A5A1Q4, A2A5A1Q5 and A2A5A1Q6 through load resistors A2A5A1R17, A2A5A1R18 and A2A5-A1R22. Amplifier A2A5A1Q4 is biased by the reference voltage at the junction of A2-A5A1R14, A2A5A1R16 and the feedback through A2A5A1R23. A2A5A1Q4, together with emitter follower A2A5A1Q5, form a conventional differential amplifier circuit.

3-177. The base of A2A5A1Q5 is biased by the voltage at the junction of resistor A2A5-A1R13 and sensor A2A5A3R2. This voltage varies as the internal temperature of oven body A2A5A3 changes due to the resistance-vs-temperature characteristic of A2A5A3R2, which is mounted on the oven surface. When the oven temperature rises, the base voltage of A2A5A1Q5 increases. The increased conduction of A2A5A1Q5 increases the voltage drop across emitter resistor A2A5A1R19. The increase in voltage across A2A5A1R19 results in a decrease of base-emitter bias on A2A5A1Q4. A2A5A1Q4 reduces conduction, thus increasing the voltage at A2A5A1Q4 collector. The increased collector voltage appears at the base of amplifier A2A5A1Q6 as a decrease in bias. This results in reduced conduction of A2A5A1Q6 and the voltage drop across A2A5A1R20 is thus reduced. Bias on emitter follower A2A5A1Q7 is also reduced and the corresponding decrease in voltage on the emitter of A2A5A1Q7 is seen at the base of power amplifier A2A5A4Q5. A2A5A4Q5 conducts less, which reduces the current flow through oven heater A2A5A3R1.

3-178. If the temperature of the oven decreases below the value established by the setting of potentiometer A2A4A1R15, the circuit operates to increase the current flow through A2A5A3R1, thereby increasing the oven temperature. The value of feedback resistor A2A5A1R23 is selected to control the damping coefficient so as to prevent excessive temperature overshoot or excessive response time.

3-179. 5 MHz OSCILLATOR CIRCUIT OPERATION. The internal 5 MHz oscillator circuit consists of crystal A2A5A1Y1, oscillator A2A5A1Q1, amplifiers A2A5A1Q2 and A2A5A1Q3 and associated components. It is a conventional, parallel mode, Colpitts oscillator. Oscillations are sustained by the collector-to-base feedback through A2A5A1Y1. Parallel capacitors A2A5A1C2 and A2A5A1C3 provide fine and coarse adjustment respectively of the oscillator frequency.

3-180. The values of capacitors A2A5A1C8 and A2A5A1C11 are selected to provide the proper range of adjustment for the variable capacitors. Two conventional untuned amplifiers (A2A5A1Q2, A2A5A1Q3) provide amplification of the 5 MHz signals. Load resistor A2A5A1R8 and resistor A2A5A1R12 form a voltage divider to prevent A2A5A1Q3 collector voltage from exceeding +5 V. This avoids damaging inverter A2A5A4U2A. The 5 MHz signal at the base of A2A5A1Q3 is applied to a detector circuit consisting of A2A5A1CR2, A2A5A1C10 and A2A5A1R11. This circuit provides negative feedback through resistor A2A5A1R10 to the base of oscillator A2A5A1Q1. This feedback acts to maintain a constant output amplitude. The value of feedback resistor A2A5A1R10 determines the output level at the collector of A2A5A1Q3.

3-181. COMPARATOR CIRCUIT OPERATION. When connected, the external 5 MHz reference appears at the collector of A2A5A4Q1 and pin 13 of phase comparator A2A5A4U1D. When the 5 MHz OSC SOURCE switch A2A5A2S1 is set to the INT/COMP position, the internal 5 MHz oscillator signal is gated to input pin 12 of A2A5A4U1D. If the two 5 MHz signals to A2A5A4U1D differ in frequency, positive pulses appear at the output of A2A5A4U1D. These pulses vary in width and rate in proportion to the phase difference between the 5 MHz signals. The output pulses from A2A5A4U1D bias LED comparator lamp A2A5A2DS1 off whenever they approach approximately +5 volts. When the 5 MHz signals are exactly the same frequency, A2A5A2DS1 may be illuminated for extended periods of time. If only one 5 MHz signal is present at the input to A2A5A4U1D, the output will be a constant positive dc voltage, which keeps the lamp extinguished. Also see paragraph 3-80.

3-182. DIVIDE-BY-FIVE OSCILLATOR CIRCUIT. The 5 MHz signal at A2A5A4U2C-8 is coupled by A2A5A2C1 to amplifier A2A5A2Q1. Resistor A2A5A2R1 and capacitor A2A5A2C2 act to decrease the rise and fall times of the 5 MHz logic level transitions and thereby decrease the switching time of amplifier A2A5A2Q1. A2A5A2Q1 provides synchronizing signals to 1 MHz Colpitts oscillator A2A5A2Q2 and associated components. The value of A2A5A2C44 establishes the range of variable capacitor A2A5A2C7. A2A5A2C7 adjusts the oscillator to synchronize on the incoming reference signal. The 1 MHz output from the emitter of A2A5A2Q2 is coupled through A2A5A2R10, A2A5A2R13, A2A5A2C10 to amplifier A2A5A2Q3. A2A5A2Q3 controls the output of transformer A2A5A2T1. Variable capacitor A2A5A2C13 allows adjustment of the waveshape at A2A5A2T1 output. Terminal 4 of A2A5A2T1 is directly connected to output connector A2A5P1A3. The values of A2A5A2R17 and A2A5A2R28 are selected for the proper 1 MHz output signal amplitude at A2A5P1A3.

3-183. DIVIDE-BY-TWO OSCILLATOR CIRCUIT. The 1 MHz signal from A2A5A2Q2 emitter is coupled through resistor A2A5A2R19 and capacitor A2A5A2C14 to the input of A2A5A2Q4. A2A5A2Q4 and associated components comprise a conventional, 500 kHz, Colpitts oscillator. Operation of the 500 kHz oscillator and amplifier A2A5A2Q5 is similar to the 1 MHz oscillator circuit. Variable capacitors A2A5A2C16 and A2A5A2C22 perform the functions corresponding to A2A5A2C7 and A2A5A2C13 respectively, in the 1 MHz oscillator circuit. Resistors A2A5A2R30 and A2A5A2R31 perform the functions corresponding to A2A5A2R17 and A2A5A2R18.

3-184. MULTIPLY-BY-TWO CIRCUIT. The 5 MHz signal from A2A5A4U2C-8 is coupled through capacitor A2A5A2C25 and resistor A2A5A2R32 to the base of 5 MHz amplifier A2A5A2Q6. A2A5A2C23 and A2A5A2R32 act to decrease the rise and fall times of the 5 MHz signal. The output of A2A5A2Q6 is coupled through A2A5A2C27 to amplifier A2A5A2Q7. A2A5A2Q7 and associated circuitry are tuned to 10 MHz by variable capacitor A2A5A2C31 in the collector circuit. The 10 MHz signal is amplified by A2A5A2Q8 and appears in the primary of A2A5A2T3. A2A5A2T3 and associated components function similarly to A2A5A2T1 described above.

3-185. 5 MHz OUTPUT CIRCUIT. The 5 MHz output from A2A5A2Q6 is coupled to amplifier A2A5A2Q9, which is tuned to 5 MHz. The output of A2A5A2Q9 is coupled through capacitor A2A5A2C39 to output connector A2A5P1A6. Variable capacitor A2A5A2C38 is used to adjust the output waveshape. A2A5A2R49 is selected to establish the output amplitude.

3-186. TRANSLATOR/SYNTHESIZER ASSEMBLY A2A6 (Figure 5-37). The translator/synthesizer is comprised of nine major subassemblies as listed below.

a. Filter Subassembly A2A6A7, a conventional pi filter, which filters the +20 V input to Power Supply Subassembly A2A6A15.
b. Rf Translator Subassembly A2A6A8.
c. Frequency Generator Subassembly A2A6A16.
d. 10 kHz/1 kHz/100 Hz Synthesizer Subassembly (No. 1) A2A6A20.

e. 10 kHz/1 kHz/100 Hz Synthesizer Subassembly (No. 2) A2A6A19.
f. 100 kHz Synthesizer Subassembly A2A6A17.
g. 10 MHz/1 MHz Synthesizer Subassembly A2A6A13.
h 10 MHz/1 MHz Filter Subassembly A2A6A14.
i. Power Supply Subassembly A2A6A15.

NOTE

Reference designations A2A6A1 through A2A6A6 and A2A6A9 through A2A6A12 and A2A6A18 are not used in order to distinguish this Translator/ Synthesizer from earlier models.

3-187. The chassis of the Translator/Synthesizer Assembly A2A6 serves as a base and an interconnection/interface for the nine subassemblies, which perform the functions of the assembly. When the translator/synthesizer chassis is mounted in the chassis assembly A2, three couplers (A2A6MP8, MP12, MP16 (Figure 7-65)) on the bottom are engaged by mechanically driven couplers on the chassis assembly. Each coupler drives one of the switches A2A6S1 through A2A6S3, which provide tuning codes for the kHz synthesizers.

3-188. The front panel 100 kHz, 10 kHz and 1 kHz controls are connected by drive chains to couplers on the equipment chassis assembly. When a front panel control is rotated, its associated chain rotates the coupler, thereby positioning the associated coding switch in Translator/Synthesizer Assembly A2A6. The 100 kHz control positions A2A6S3, the 10 kHz control positions A2A6S2 and the 1 kHz control positions A2A6S1. These switches supply a four-line tuning code consisting of opens (BINARY 1) and grounds (BINARY 0) to the synthesizer circuits. The synthesizers produce the injection frequencies used in RF Translator Subassembly A2A6A8 (Table 3-1). When the front panel 100 kHz control is in zero position, the 100 kHz digit of the injection frequency, in both hi and lo bands, is 4. As shown in figure 5-32, A2A6S3 deck C is open at this setting (contact 1) and the remaining three decks are grounded. Similarly, if the front panel control is set at 300 kHz, the 100 kHz digit of the injection frequency is 7 in both hi and lo bands. In this position the wipers of all four decks of A2A6S3 will be on contact 8, producing an open circuit for all decks except deck B. The 100 kHz digit of the injection frequency increases progressively from 4 thru 9 to 3 as the 100 kHz control is increased from 0 to 9.

3-189. Switches A2A6S2 and A2A6S1 operate in a similar manner. The 10 kHz switch A2A6S2 and the 1 kHz switch A2A6S1 are natural binary coded decimal (BCD) switches, converting the decimal dial position to BCD. The injection frequency decreases progressively as either the 10 kHz or 1 kHz control is increased. Table 3-1 indicates the injections for the various control positions.

3-190. RF TRANSLATOR (Figure 5-38). The RF Translator Subassembly A2A6A8 contains the circuit effecting rf-to-IF conversion. The signal flow direction required for the R-1051H/URR application is established by gating diodes within the rf translator. Frequency conversion is accomplished in three mixer stages. These progressively combine the rf with injection signals from the synthesizer subassemblies A2A6A17, A2-A6A19 and 10 MHz/1 MHz Filter A2A6A14 of Translator/Synthesizer Assembly A2A6.

3-191. Biasing of the gating diodes, which determine the signal path through the rf translator, is accomplished with the dc voltage and ground present at A2A6A8J7 and A2A6A8J5, respectively. The voltage at A2A6A8J4 determines whether the 20 MHz bandpass filter or the 30 MHz bandpass filter is enabled.

3-192. The input at A2A6A8J4 may be either +20 V for lo-band operation or ground for hi-band. This is controlled by the hi/lo filter relay A2A13K2. When the input is +20 V, diodes A2A6A8CR10 and A2A6A8CR12 are biased into conduction. This serves to direct the rf signal through 20 MHz bandpass filter A2A6A8FL1. When A2A6A8J4 is grounded, diodes A2A6A8CR11 and A2A6-A8CR13 conduct, directing the rf signal through 30 MHz bandpass filter A2A6A8FL2.

3-193. A2A6A8J5 and A2A6A8J7 inputs are at ground and +20 V respectively. This

condition forward biases diodes A2A6A8CR3, A2A6A8CR4, A2A6A8CR6, A2A6A8CR9, A2A6A8CR15 and A2A6A8CR18, resulting in a continuous signal path from RF input terminal A2A6A8E13 to IF output terminal A2A6A8E3 as shown in figure 5-38.

3-194. Mixer stages A2A6A8U1 through A2A6A8U3 operate in an almost identical manner. They utilize type CA3049 integrated circuits, which provide both mixing and amplification. The injection frequency input to high frequency mixer A2A6A8U3 is any one of 17 frequencies between 2.5 MHz and 23.5 MHz. It is received at A2A6A8E9 from 10 MHz/1 MHz filter subassembly A2A6A14 and applied to pin 2 of A2A6A8U3. Resistors A2A6A8R50 and A2A6A8R58 provide the proper impedance termination for the output of A2A6A14 and input of A2A6A8U3. Thermistor A2A6A8RT3 produces an increase in the injection signal input level applied to mixer A2A6A8U3 whenever the operating temperature increases. Resistor A2A6A8R55 controls the effect thermistor A2A6A8RT3 has on the injection signal input level.

3-195. The second input to the mixer is the input signal from the RF Amplifier Assembly A2A4. It is received at A2A6A8E13 and applied to terminating resistor A2A6A8R51 and diode limiters A2A6A8CR19 and A2A6A8CR20. Potentiometer A2A6A8R52 sets the amplitude of the rf input signal, which is then coupled through A2A6A8C63, gating diode A2A6A8CR18 and input transformer A2A6A8T7 to the input of mixer A2A6A8U3. A2A6A8R48 is a swamping resistor, placed across the primary winding of input transformer A2A6A8T7 to provide the required bandwidth. The signal at the secondary of A2A6A8T7 is applied as the second input to pins 1 and 10 of A2A6A8U3. Resistive divider A2A6A8R67, A2A6A8R68 and A2A6A8R69 applies bias voltage through the split secondary winding of A2A6A8T7 to the internal amplifiers associated with pins 1 and 10. The sum and difference output signals exit from pins 11 and 12 of A2A6A8U3 and are applied to the primary winding of output transformer A2A6A8T6. A2A6A8R40 is a series dropping resistor in the +20 V path to the amplifiers within A2A6A8U3. Capacitors A2A6A8C53, A2A6A8C55 and A2A6A8C60 provide rf bypassing for the internal biasing circuits within mixer A2A6A8U3. The output from A2A6A8U3 is then directed through A2A6A8CR15 and A2A6A8C48 to bandpass filter A2A6A8FL1 or A2A6A8FL2 as determined by the voltage at A2A6A8J4. Either 19.500 to 20.4999 MHz (lo-band) or 29.5000 to 30.4999 MHz (hi-band) is passed through A2A6A8C38, A2A6A8C37, A2A6A8CR9 and A2A6A8T5 to the input of mid-frequency mixer A2A6A8U2.

3-196. In mid-frequency mixer A2A6A8U2, the signal from A2A6A8FL1 or A2A6A8FL2 is mixed with the injection signal (22.4 to 23.3 MHz lo-band or 32.4 to 33.3 MHz hi-band) from 100 kHz Synthesizer Subassembly A2A6A17. The 2.8001 to 2.9000 MHz output from A2A6A8U2 then passes through gating diode A2A6A8CR6 and A2A6A8C25 to bandpass filter A2A6A8FL3. The filtered output is applied through A2A6A8C18, A2A6A8C20, gating diode A2A6A8CR4 and transformer A2A6A8T2 to the input of low frequency mixer A2A6A8U1.

3-197. A2A6A8U1 performs the low frequency conversion by mixing the input at pin 1 with the 3.3001 to 3.4000 MHz injection at pin 2. The frequencies developed across the secondary of A2A6A8T3 are fed through forward-biased gating diode A2A6A8CR3 and A2A6A8C13 to low-pass filter A2A6A8L2, A2A6A8C12 and A2A6A8R13. This low-pass filter removes harmonics from the output of A2A6A8U1 and applies the 500 kHz IF signal through A2A6A8C10 to a conventional tuned amplifier A2A6A8Q1.

3-198. Resistor A2A6A8R6 and capacitor A2A6A8C9 provide power supply decoupling for A2A6A8Q1, which is biased by base resistors A2A6A8R8, A2A6A8R9 and emitter resistors A2A6A8R5, A2A6A8R7. Capacitor A2A6A8C3 stabilizes A2A6A8Q1 for operation at 500 kHz. The collector circuit of A2A6A8Q1 is tuned to 500 kHz by means of a conventional LC parallel-resonant circuit comprised of A2A6A8C2, A2A6A8T1. Resistor A2A6A8R1 swamps the secondary winding of A2A6A8T1, which is adjusted to provide the necessary 500 kHz IF frequency response to output connector A2A6A8E3.

3-199. FREQUENCY GENERATOR (Figure 5-42). Frequency Generator Subassembly

A2A6A16 receives a stable 10 MHz reference from Frequency Standard Assembly A2A5. Using integrated circuit dividers, the frequency generator produces the 500, 100 and 1 kHz reference frequencies used in the frequency synthesizer circuits. The stable, 10 MHz reference output from Frequency Standard A2A5 is applied to Frequency Generator Subassembly A2A6A16 via connector A2A6A16P1A1. It is terminated by resistor A2A6A16R1, and coupled through A2A6A16C5 to the input of two-stage, common emitter amplifier A2A6A16Q1, A2A6A16Q2. Resistors A2A6A16R2, A2A6A16R3, A2A6A16R6 and A2A6A16R7 provide base bias for A2A6A16Q1 and A2A6A16Q2. Shunt peaking inductors A2A6A16L6, A2A6A16L7 and stray capacitance form high impedance parallel L-C networks to improve high frequency response. The emitters are partially bypassed by capacitors A2A6A16C7 and A2A6A16C9 to improve stability.

3-200. The amplified 10 MHz signal at the collector of A2A6A16Q1 is capacitively coupled via A2A6A16C8 to the base of A2A6A16Q2. Amplifier A2A6A16Q2 provides additional amplification and applies the 10 MHz signal through capacitor A2A6A16C10 to a level shifter consisting of inverter A2A6A16U1A, capacitor A2A6A16C11 and resistors A2A6A16R10, R11. The sinusoidal 10 MHz signal at input pin 1 of A2A6A16U1A is converted into a square wave output at pin 2, which is then suitable for driving the remaining integrated circuit gates and dividers of subassembly A2A6A16.

3-201. The integrated circuit divider chain A2A6A16U2 and A2A6A16U3 (Figures 3-8, 5-11) is isolated from the level shifter circuit components by a buffer stage consisting of inverters A2A6A16U1B and A2A6A16U1F. The 10 MHz output signal at pin 12 of inverter A2A6A16U1F is applied to input pin 1 of decade divider A2A6A16U2A, which applies a 1 MHz input signal to pin 15 of binary divider A2A6A16U2B (the two dividers being incorporated in A2A6A16U2). Output pin 13 of A2A6A16U2B provides a 500 kHz clock pulse to connector A2A6A16P1A2 for use as the reference frequency input to 10 MHz /1 MHz Synthesizer Subassembly A2A6A13.

3-202. The 1 MHz clock pulse at A2A6A16U2-15 is also divided by 10 within A2A6A16U2B, which provides a 100 kHz output signal from pin 9. This is distributed to pin 1 of decade divider A2A6A16U3A, and via buffer U1D, to connector A2A6A16P1A4 for use by 100 kHz Synthesizer Subassembly A2A6A17. Divider A2A6A16U3A then provides a 10 kHz clock pulse output to pin 12 of decade divider A2A6A16U3B. The 1 kHz output from pin 13 of A2A6A16U3B is applied to gating circuit A2A6A16U4A-A2A6A16U4D. This gating circuit selects either the 1 kHz output of A2A6A16U3B or the variable 1 kHz frequency output of the phase-locked loop circuit (consisting of A2A6A16U9 through A2A6A16U13, -U5 through -U7 and A2A6A16Q5) as the reference frequency for 10 kHz/1 kHz/100 Hz Synthesizer Subassembly A2A6A19.

3-203. The gating circuit is enabled when level shifter A2A6A16Q3, A2A6A16Q4 responds to the +4.3 V input at connector A2A6A16P1-9. The +4.3 V from Hz switch A2A14A11S1AR-5 located on the R-1051H/URR front panel is applied to voltage divider A2A6A16R12 and A2A6A16R13. Transistor A2A6A16Q3 is then biased on and A2A6A16Q4 is biased off. This action applies +5 V to inverter A2A6A16U4A and NAND gate A2A6A16U4B. This logic high level input at A2A6A16U4B-13 allows the 1 kHz pulse at A2A6A16U4B-12 to appear as a logic low at input pin 1 of NOR gate A2A6A16U4D. Input pin 2 of A2A6A16U4D is maintained at a constant logic high due to the logic low applied through inverter A2A6A16U4A to input pin 4 of NAND gate A2A6A16U4C. Each negative transition of the 1 kHz pulse gates pin 3 of A2A6A16U4D, resulting in a logic high level output.

3-204. In the vernier tuning application the +4.3 V path from the Hz switch to connector A2A6A16P1-9 is interrupted, which turns A2A6A16Q3 off and causes A2A6A16Q4 to conduct. With the collector of A2A6A16Q4 essentially grounded, a logic low is applied to input pins 9 and 10 of inverter A2A6A16U4A and pin 13 of NAND gate A2A6A16U4B. The output at pin 11 of A2A6A16U4B is then a constant logic high, and the 1 kHz clock pulse from the previously described divider chain is blocked. Inverter A2A6A16U4A applies a logic high at input pin 4 of NAND gate A2A6A16U4C, and the 1 kHz clock

pulses received from the phase-locked loop circuitry (Paragraph 3-215) at input pin 5 are gated through A2A6A16U4C to NOR gate (employing negative logic) A2A6A16U4D. With a constant logic high at input pin 1, the pin 3 output of A2A6A16U4D gates to a logic high level for each negative logic transition of the 1 kHz clock pulse present at input pin 2. The logic low at the collector of A2A6-A16Q4 biases on transistor A2A6A16Q6 through A2A6A16R39. This enables VCO A2A6A16U11 when in the vernier mode.

3-205. In the vernier tuning application, a control voltage in the range of +2.5 to +3.7 V is applied through connector A2A6A16P1-3 and resistor A2A6A16R17 to the inverting input (pin 2) of amplifier A2A6A16U14 (Figure 3-11). Zener diode A2A6A16CR1 applies +6.2 V to a voltage divider consisting of A2A6A16R21 through R23, and +3.0 to +5.0 V (as determined by the setting of potentiometer A2A6A16R22), is applied through resistor A2A6A16R20 to the noninverting input (pin 3) of A2A6A16U14. The gain of amplifier A2A6A16U14 is established by the value of A2A6A16R17 and feedback resistors A2A6A16R18, R19, and is set in the range of 0.25 to 0.3 with potentiometer A2A6A16R18.

3-206. Amplifier A2A6A16U14 then provides a dc control voltage output at pin 6, which varies according to the vernier control voltage input to pin 2. The output from pin 6 of A2A6A16U14 is applied to input pin 2 of voltage-controlled multivibrator A2A6A16-U8 (Figure 3-12), which oscillates at 15 to 19 kHz as determined by the voltage at input pin 2 and the value of capacitor A2A6A16-C22. This 15 to 19 kHz output signal at pin 6 of A2A6A16U8 provides an adjustable reference frequency to one input (pin 3) of phase detector A2A6A16U9 (Figure 3-15).

3-207. Mixer A2A6A16U13 (Figure 3-10) receives a 10 MHz standard frequency via the previously described amplifiers A2A6A16Q1, Q2, level shifter A2A6A16U1A, and buffers A2A6A16U1B and -U1E, and also receives a sample of the output from voltage controlled oscillator A2A6A16U11. The 15 to 19 kHz difference frequency from output pin 5 of A2A6A16U13 is applied as the second input (pin 1) of phase detector A2A6A16U9.

3-208. Phase detector A2A6A16U9 monitors the negative transitions of the reference signal (at input pin 3) and the feedback signal (at input pin 1), and develops a correction signal of the proper polarity and magnitude to phase-lock the VCO A2A6A16U11. If the VCO frequency is too high, the frequency at input pin 1 is higher than the reference frequency at pin 3, and a correction signal appears at pin 13. In like manner, if the VCO frequency is too low a correction signal appears at pin 2 and pin 13 remains at a logic high level. In either case, the correction signal is a series of negative pulses whose width is proportional to the difference in time between the negative transitions at input pins 1 and 3.

3-209. Jumpers between pins 13 and 4 and between 2 and 11 apply the appropriate correction signal to charge-pump circuitry within A2A6A16U9, which initiates the phase detector outputs and applies fixed amplitude positive or negative pulses to output pin 10 or pin 5, respectively. In the phase-locked condition the negative transitions at input pins 1 and 3 coincide, and there is no correction signal from pin 5 or 10 of A2A6A16U9. Because A2A6A16U9 responds only to negative transitions, the correction signal is independent of the amplitude or duty cycle of the reference and feedback signals.

3-210. The positive or negative pulses from phase detector A2A6A16U9 are applied through resistor A2A6A16R26 or A2A6A16-R25, respectively, to the inverting input (pin 2) of amplifier A2A6A16U10 (Figure 3-11). Amplifier A2A6A16U10 and feedback elements A2A6A16R27, R28, C25 form a conventional integrating amplifier, which converts the positive or negative phase detector pulses into dc control voltages for the A2-A6A16U11 VCO. In the phase-locked condition, the integrating amplifier stores the proper VCO control voltages. The input voltage range of A2A6A16U10 is established by the voltage drop across forward biased reference diodes A2A6A16CR2, CR3, which is applied through resistor A2A6A16R29 to the non-inverting input (pin 3) of A2A6A16U10. The dc control voltage output from A2A6-A16U10 pin 6 is applied through resistor A2A6A16R32 to reverse bias variable

capacitance diode A2A6A16CR5, which forms an LC tank circuit in conjunction with inductor A2A6A16L5 and capacitor A2A6-A16C30.

3-211. The reverse voltage across A2A6-A16CR5 determines the exact value of the tank circuit reactance, and capacitor A2A6-A16C30 limits the output frequency range of A2A6A16U11. The tank circuit is connected to input pins 10 and 12 of oscillator A2A6-A16U11 to establish the output frequency at pin 3. Resistor A2A6A16R33 maintains a fixed bias at the anode of A2A6A16CR5 to ensure that the variable capacitance diode is always reverse-biased, and capacitor A2A6-A16C29 serves a dc-blocking function. Capacitor A2A6A16C28 ensures that the voltage applied to A2A6A16CR5 is a dc level, since any signal at this point (such as phase detector pulses feeding through A2A6A16-U10) will produce undesirable sidebands at the VCO output. Capacitor A2A6A16C31 completes the signal ground path for the LC tank circuit, and A2A6A16C32, C33 serve as rf bypasses.

3-212. In the phase-locked condition the output frequency of A2A6A16U11 is in the range of 9.981 to 9.985 MHz, with the exact frequency determined by the value of vernier control voltage applied to connector A2A6-A16P1-3. The output signal from A2A6A16-U11-3 is buffered by emitter-follower A2A6A16Q5 and coupled through capacitor A2A6A16C34 to a level shifter and buffer circuit consisting of A2A6A16U12A through U12D (Figure 3-7) and associated components. Circuit operation of the level shifter and buffer circuit is the same as described for inverters A2A6A16U1A through U1D (Paragraphs 3-200, 3-201 and 3-207).

3-213. The output signal at pin 10 of inverter A2A6A16U12C is applied to one input of mixer A2A6A16U13, which develops a 15 to 19 kHz input signal for phase detector A2A6A16U9 as previously described. The 9.981 to 9.985 MHz output signal is also applied from pin 12 of inverter A2A6A16U12D to the divide-by-9984 circuit. Dividers A2-A6A16U5A, A2A6A16U5B (Figure 3-14) are configured, via the connection from pin 6 to pin 13, to divide the input frequency (at pin 1) by 256 and apply the output signal to pin 8. The preceding part of the divide-by-9984 function is performed by a divide by-39 circuit consisting of programmable dividers A2A6A16U6 and A2A6A16U7.

3-214. In actuality cascaded dividers A2A6-A16U7 and A2A6A16U6 are programmed by fixed voltage levels on pins 3, 4, 5 and 6 to count by 7 and 4 respectively, thus apparently yielding an effective division ratio of 47 due to the cascade operation. However, because of their operation as ripple clock counters, a premature decrementing by a net 8 pulses occurs each cycle, leaving an actual count of 47 - 8 = 39 pulses per cycle. Thus, in cascade operation A2A6A16U7 and U6 effectively constitute a divide-by-39 divider, so that one positive pulse is applied to pin 1 of A2A6A16U5 for every 39 data pulses. Simultaneously a pulse from A2A6A16U6-15 resets both U6 and U7.

3-215. With U5 providing a division ratio of 256, the overall division ratio is 39 X 256 = 9984. The output signal from the divide-by-9984 circuit (at pin 8 of A2A6A16U5) is in the frequency range of 999.7 to 1000.1 Hz as required for the R-1051H/URR vernier tuning application. This vernier controlled reference signal is then gated through A2A6-A16U4C and U4D to A2A6A16P1A3 (Paragraph 3-204) for application to 10 kHz/1 kHz/100 Hz Synthesizer Subassembly A2A6-A19.

3-216. 10 kHz/1 kHz/100 Hz SYNTHESIZER. The 10 kHz/1 kHz/100 Hz Synthesizer Subassemblies A2A6A20 (Figure 5-45) and A2A6A19 (Figure 5-44) produce the 3.3001 to 3.4000 MHz injection signal used in the low-frequency mixer of RF Translator Subassembly A2A6A8. A phase-locked loop is used to ensure accuracy of the injection frequency. The phase-locked loop is a servo system in which the output signal is locked to the 1 kHz input reference signal from Frequency Generator Subassembly A2A6A16. The phase of the output signal is compared with the phase of the 1 kHz reference in A2-A6A19, and any difference is converted into a dc error correction voltage. This error correction voltage alters the output frequency to maintain a constant phase difference between the output and the 1 kHz reference signal.

3-217. The 1 kHz reference signal is supplied by dividers in Frequency Generator Subassembly A2A6A16, and accuracy of the 3.3001 to 3.4 MHz injection signal is the same as that of Frequency Standard Assembly A2A5, except when the Hz switch A2A14A11S1 is in V position (Paragraph 3-204).

3-218. The output signal is generated by the voltage-controlled oscillator (VCO) consisting of variable capacitance diode A2A6A19A1CR1, LC oscillator A2A6A19A1U1, and associated components (Figure 5-44). The frequency at A2A6A19A1U1 is 33.001 to 34.000 MHz. This is determined by the reactance of the LC tank circuit comprised of varactor diode A2A6A19A1CR1, capacitors A2A6A19A1C2, A2A6A19A1C3, and inductor A2A6A19A1L1. A dc control voltage biases A2A6A19A1CR1 (through resistor A2A6A19A1R1) to establish the correct value of the LC tank circuit reactance, thereby determining the specific output frequency from A2A6A19A1U1. Capacitors A2A6A19A1C1 and A2A6A19A1C4 complete the signal path for the 33.001 to 34.000 MHz oscillations in the LC tank circuit.

3-219. The output signal at pin 3 of A2A6A19A1U1 is applied to a programmable frequency divider network on 10 kHz/1 kHz/100 Hz Synthesizer Subassembly A2A6A20. The programmable frequency divider network selects the injection frequency in response to the positions of the front panel Hz control A2A14A11S1, the 1 kHz coding switch A2A6S1, and the 10 kHz coding switch A2A6S2 on the chassis of Translator Synthesizer A2A6. For example, if the front panel controls are set for a frequency of 1,100 Hz, the divider network will be programmed to divide the VCO output frequency by 33,989. In the phase-locked condition, the VCO output frequency is exactly 33.989 MHz and the divider network output frequency is exactly 1 kHz. If the VCO output is slightly off frequency, the output from the divide-by-33,989 network will no longer be exactly 1 kHz.

3-220. The divider network output is applied to pin 3 of phase detector A2A6A19U1, which develops negative pulsed output in proportion to the magnitude and direction of the phase difference between the divider network output and the 1 kHz reference input from Frequency Generator Subassembly A2A6A16. The negative pulses are applied through resistor A2A6A19R4 or A2A6A19R19 to the charge pump circuit comprised of transistors A2A6A19Q1 through A2A6A19Q3. The charge pump amplifies the negative going pulses from A2A6A19R4, or inverts and amplifies the negative going pulses from A2A6A19R19. The charge pump output (which consists of negative or positive going pulses, respectively) is applied to loop filter A2A6A19C2, A2A6A19R7, and A2A6A19R9, which converts the output pulses from the charge pump into the dc frequency control voltage required by variable capacitance diode A2A6A19A1CR1. If the phase difference between the pin 1 and pin 3 inputs to A2A6A19U1 is not correct, the dc frequency control voltage will decrease or increase the reverse bias across A2A6A19A1CR1, and the capacitance of A2A6A19A1CR1 will change, as required, to establish the proper output frequency from the VCO.

3-221. The output signal at pin 3 of A2A6A19A1U1 is also applied to emitter follower A2A6A19A1Q1, which isolates LC oscillator A2A6A19A1U1 from the output circuitry of 10 kHz 1 kHz/100 Hz Synthesizer Subassembly A2A6A19. From the emitter of A2A6A19A1Q1, the VCO output is applied to amplifiers A2A6A19U2A through A2A6A19U2C, which increase the amplitude of the 33.001 to 34.000 MHz signal and provide the correct logic level input to pin 14 of decade divider A2A6A19U3. The 3.3001 to 3.4000 MHz output signal from pin 6 of A2A6A19U3 is inverted by A2A6A19U2D and applied to the bandpass filter consisting of A2A6A19L6 through A2A6A19L10 and A2A6A19C10 through A2A6A19C12. The narrow pass-band and sharp cutoff characteristics of the filter attenuate frequencies outside the injection signal range to prevent spurious responses. The injection signal amplitude is adjusted by potentiometer A2A6A19R16 to establish the proper injection signal level to the low frequency mixing circuit of RF Translator Subassembly A2A6A8.

3-222. The A2A6A20 assembly (Figure 5-45) performs the division of the A2A6A19A1U1 VCO output frequency to provide the 1 kHz frequency for the A2A6A19U1 phase detector. With dual modulus Prescaler A2A6A20

U1A selected, U1A divides inputs on pin 15 by either 10 or 11 depending upon whether pins 9 and 10 are at a logic high or low respectively. This divided frequency output from A2A6A20U1A pin 7 is applied to counters A2A6A20U2, -U4, -U9, -U10 and -U5, and to count correction counter A2A6A20U6. Once each kilohertz period, the inputs to these dividers achieve the counts necessary to produce an output at pin 15 of A2A6A20U6. This output is the 1 kHz frequency for the phase detector A2A6A19U1.

3-223. Dual Modulus Prescaler A2A6A20U1A (or U1B) will divide by 11 if the Hz control (A2A14A11S1) is in any hundreds position other than 000. This division by 11 will continue until A2A6A20U2 counts down from its preset count, causing a logic high output at U2-12 for the balance of a counting cycle. This logic high is applied to pins 9 and 10 of A2A6A20U1A, (or pin 3 of U1B), which makes the dual modulus prescaler divide by 10 for the remainder of the counting cycle. A counting cycle begins and ends with each output from A2A6A20U6-15. The number of input pulses to A2A6A20U1A-15 (or U1B-15) required for a counting cycle is determined by the counts set into the programmable dividers A2A6A20U2, -U4, -U9, -U10, -U5 and -U6.

3-224. Cascading of the dividers following A2A6A20U2 is accomplished by supplying the input to each divider from the pin 15 output of each preceding divider. However, A2A6A20U6 is connected so as to add 8 data pulses to the total countdown established by preceding dividers A2A6A20U2, -U4, -U9, -U10 and -U5. The need for this 8-digit correction by A2A6A20U6 arises from a cascading effect in the preceding dividers, which causes them to skip 8 pulses during a cycle and thus count down 8 pulses earlier than desired. By adding the 8 pulses to the A2A6A20U5 output, A2A6A20U6 compensates for the counting error that would otherwise occur. The count (three) set into divider A2A6A20U5 represents the most significant digit in the programmable divider network. At the conclusion of the counting cycle the pin 15 output of A2A6A20U6 is applied, both as a reset pulse for the divider chain, and as an input to the phase detection circuitry of A2A6A19 (Paragraph 3-220).

3-225. As an example of the operation of the divider network, assume that the front panel kHz and Hz controls have been set at 2,500 Hz, dictating a low-frequency mixer stage injection frequency of 3.3975 MHz. (This injection frequency is indicated since 2,500 Hz requires, according to table 3-1, an injection frequency 2500/10000 down from the top end of the 10 kHz range covered by the 0 setting of the 10 kHz control setting. Thus, 3.4 MHz - .0025 MHz = 3.3975 MHz). In this case counts of 3, 3, 9, 7 and 5 should be preset in dividers A2A6A20U5, -U10, -U9, -U4 and -U2, respectively (A2A6A20U6 always adds a fixed error correction count of 8 to the count of the preceding dividers). With A2A6A20U2 preset to divide by 5, prescaler A2A6A20U1A (orU1B) divides by 11 five times. After 55 input pulses to pin 15 of A2A6A20U1A, preset divider A2A6A20U2 changes the divisor of A2A6A20U1A from 11 to 10, via a logic high to U1A pins 9 and 10.

3-226. At this time, the cascade divider chain A2A6A20U4, -U9, -U10 and -U5 has also decreased by 5 (from the preset divisor of 3397) and is at the 3392 count. Since the divisor of A2A6A20U1A is now 10, the following divider chain now begins decrementing by one count for every ten input pulses to U1A. However, as indicated in paragraph 3-224, in actual practice the divider chain arrives at the count-down state 8 pulses early, due to premature decrementing as a consequence of the count-skipping effect resulting from cascading of ripple clock counters, but A2A6A20U6 compensates for this effect through its preset 8 count. With the count thereby corrected, the logic low then occurring at U6-15 resets U6, U5, U10, U9 and U2 to 8, 3, 3, 9, 7 and 5, respectively.

3-227. Note that the total number of input pulses required for one output pulse is 33920 plus 55, or 33,975. Since the phase detector input pulses must occur at a 1 kHz rate in phase-locked condition, the output frequency of VCO assembly A2A6A19A1 is locked at 1 kHz times 33,975 or 33.975 MHz. The VCO output is then applied through decade divider A2A6A19U3 to provide a 3.3975 MHz injection signal to the low-frequency mixing circuit of RF Translator Subassembly A2A6A8 as previously described.

3-228. An example of how the prescaler and the cascaded dividers or counters synthesize a frequency is described in paragraphs 3-228 through 3-332. Consider that A2A6A20U5 counts by ten to the fourth power, A2A6-A20U10 by ten to the third, A2A6A20U9 by ten to the second, A2A6A20U4 by ten to the first and A2A6A20U2 by ten to the zero power. Also consider that all counters must complete their counts one thousand times per second to attain an output of 1 kHz. Then the frequency of the network operation is the sum of the cycles required to count down each counter multiplied by one thousand. The required mixing frequency for a front panel setting for, say, 12,400 Hz is 3.3876 MHz, as may be determined similarly to the example for 2500 Hz (Paragraph 3-225) by use of table 3-1. This would result in an input frequency to prescaler A2A6A20U1A (or U1B) of 33.876 MHz. Divider A2A6A20U5 is fixed to count by 3. Divider A2A6A20U10 can be programmed for either a count of 3 or 4 and is set at 3. Similarly, A2A6A20U9 is set at 8, while A2A6A20U4 and -U2 should be set at 7 and 6 respectively. Adding the cycles required for each counter:

U5:	3 times ten to the fourth =	30000
U10:	3 times ten to the third =	3000
U9:	8 times ten to the second =	800
U4:	7 times ten to the first =	70
U2:	6 times ten to the zero =	6
		33876

As in the previous example, A2A6A20U6 maintains the final count at the proper figure (here 33876) by adding an 8-count correction to compensate for the 8-pulse count loss due to premature decrementing of the counter chain. Thus, with the cycle count returned to 33876 per one-kilohertz period, the total pulse count per cycle (or frequency divisor) is 33876 times 1000 = 33.876 MHz. As before, the fixed count in A2A6A20U5 determines the most significant digit in the programmable divider network.

3-229. Programming (presetting) divider A2A6A20U3 is accomplished by positioning the front panel Hz switch. Hz switch A2-A14A11S1 forms a binary coded decimal (BCD) word. The BCD words apply either a logic low or logic high to level shifters A2-A6A20Q1-A2A6A20Q8, which change the logic low/high levels from the switch to TTL logic low/high levels, which are the required input to complement converter A2A6A20-U7. The output from pins 4, 3, 2, and 1 of A2A6A20U7 is then applied to the data pins of divider A2A6A20U2.

3-230. A2A6A20U7, A2A6A20U3 and A2-A6A20U8 perform 9's or 10's complement conversion depending upon the state of input on pin 14. If pin 14 is a logic low, the BCD word on pins 10, 11, 12, and 13 is changed to its 10's complement on pins 1, 2, 3, and 4. That is, if the BCD input is 0, 1, 6 or 9 the output will be 0, 9, 4 or 1. A2A6A20U7 always performs 10's complement conversion since its pin 14 is always a logic low. If pin 14 of A2A6A20U3 or A2A6A20U8 is high, however, their BCD input will be converted to the 9's complement. Thus if the BCD input is 0, 1, 6 or 9 the output will be 9, 8, 3, or 0. Also, if the BCD input is other than 0, the output on pin 5 will go to a logic high forcing succeeding converters to perform 9's complement conversions.

3-231. Complement converters A2A6A20U3 and A2A6A20U8 perform the appropriate 9's or 10's complement conversion for dividers A2A6A20U4 and A2A6A20U9 respectively. The inputs for A2A6A20U3 are from switch A2A6S1. Similarly, A2A6S2 provides the inputs for A2A6A20U8. If A2A6S1, A2A6S2 and A2A14A11S1 are all at 0 positions A2A6A20U9 pin 3 will be a logic low and A2A6A20U9 pin 15 will be a logic high. This condition causes A2A6A20U10 and A2A6-A20U9 to divide by 4 and 3 respectively. If, however, any Hz, kHz, or 10 kHz input is other than 0, A2A6A20U8 pins 5 and 6 will be logic high and low respectively and A2A6-A20U10 and A2A6A20U5 will each divide by 3. Thus, for a panel setting of 12,400 Hz A2A6A20U7 will perform a 10's complement on the 4 (400 Hz) and A2A6A20U3 will perform a 9's complement on the two (2 kHz). Similarly, A2A6A20U8 will form a 9's complement on the one (10 kHz = 1). This forms the desired 33876 divisor.

3-232. When Hz switch A2A14A11S1 is in the V (vernier) position, A2A6A20U2 always divides by 9, and dividers A2A6A20U4, -U9, -U10 and -U5 divide by the number determined by the setting of A2A6S1 and

A2A6S2. A 999.7 to 1000.1 Hz reference signal is applied at A2A6A19U1 pin 1. The VCO circuit tracks the reference signal causing the injection frequency to the low frequency mixer in A2A6A8 to vary continuously in the range between two 1-kHz steps (Table 3-1).

3-233. Programming of dividers A2A6A20-U2, -U4, -U9 and -U10 is controlled by the setting of the front panel 10 kHz, 1 kHz, and Hz controls. For example: Hz control A2-A14A11S1 applies one of ten binary coded decimal (BCD) words to input pins 8 through 11 of A2A6A20P1. The BCD words are formed by applying either an open circuit (logic low) or +4.3 V (logic high) to each of the four code lines, with the input at A2A6-A20P1-11 corresponding to the least significant bit of the word. The code from the Hz control undergoes logic level conversion in level shifters A2A6A20Q1 through A2A6-A20Q8, which change the logic low/high levels from the switches to the TTL logic low/high levels that are the required inputs to complement converter A2A6A20U7.

3-234. Each BCD word (Note 1 of Figure 5-13) applied to input pins 10 through 13 of A2A6A20U7 represents a unique setting of the front panel Hz control. The outputs from pins 1 through 4 of A2A6A20U7 are then applied to the data pins of divider A2A6A20U2, with the code from A2A6A20U7 pin 1 representing the least significant bit. For example, when the front panel Hz control is set to 300, the BCD word 3 (0011) is applied to A2-A6A20U7, and is converted into 7 (0111) on pins 4, 3, 2, and 1 respectively, for programming of divider A2A6A20U2 (Notes 1 and 2 of Figure 5-13). Divider A2A6A20U2 is then preset to count down from the number 7.

3-235. Programming of divider A2A6A20U4 differs from that of the previous paragraphs in that the preset counts depend upon whether the Hz control is in the 000 position or not (Note 3 of Figure 5-13). If the Hz control is in the 000 position, A2A6A20U7 pin 5 is at a logic zero (Note 1 of Figure 5-13). The logic zero is applied to A2A6A20U3 pin 14. Thus, the output of A2A6A20U3 will be the 10's complement of the input from kHz switch A2A6S1. If, however, the Hz control is in other than the 000 position, pin 5 of A2A6A20U7 will be at a logic high and A2A6A20U3 will perform the 9's complement of any input from the kHz switch. Thus, 7000 on the Hz and kHz dials will be programmed as its 10's complement into A2A6-A20U3, i.e., as (0011) on pins 6, 5, 4 and 3 of A2A6A20U4, while 7100 will be programmed at its 9's complement into A2A6A20U4 as 2 (0010) on pins 6, 5, 4 and 3.

3-236. Programming of A2A6A20U9 is accomplished in a similar manner to A2A6-A20U4. The BCD word from 10 kHz switch A2A6S2 is applied to converter A2A6A20U8 (Note 3 of Figure 5-13). If both the Hz and kHz controls are set at 0, A2A6A20U8 will perform the 10's complement of the input BCD word from the 10 kHz control since pin 14 of A2A6A20U8 will be at a logic low. However, if either the Hz or kHz control is set other than at 0, A2A6A18U10 pin 14 will be at a logic high and a 9's complement conversion of the input BCD word from the 10 kHz control will be performed by A2A6A20-U8. A2A6A20U8 conversion outputs on pins 1 through 4 program A2A6A20U9 on pins 3, 4, 5 and 6.

3-237. A2A6A20U10 is programmed as a 4 if the Hz, kHz and 10 kHz controls are all at 0. For this condition pin 6 of A2A6A20U8 will be at a logic high. This logic high is applied to A2A6A20U10 and programs it to a 4. If, however, any or all of the Hz, kHz or 10 kHz controls are set at other than 0, A2A6A20U8 pin 5 will be at a logic high. This logic high is applied to pins 3 and 4 of A2A6A20U10 and A2A6A20U10 is programmed as a 3. Three and four are the only programmed states for A2A6A20U10. A2A6-A20U5 is always programmed for three by applying 5 volts through A2A6A20R26 to pins 3 and 4. Similarly, U6 is always programmed to divide by 8.

3-238. 100 kHz SYNTHESIZER (Figure 5-43). The 100 kHz Synthesizer Subassembly A2A6A17 produces the injection frequency of 22.4 to 23.3 MHz (lo-band) or 32.4 to 33.3 MHz (hi-band) used in the mid-frequency mixer circuits of RF Translator Subassembly A2A6A8. This synthesizer uses phase-locked loop circuitry similar to that used in 10 kHz/1 kHz/100 Hz Synthesizer Subassembly A2A6A19/A2A6A20. The phase detector

(A2A6A17U1), charge pump (A2A6A17Q6 through A2A6A17Q8) loop filter (A2A6A17C2 - A2A6A17C3, A2A6A17R8, A2A6A17R32 - A2A6A17R33), VCO (A2A6A17A1CR1, A2-A6A17A1L1, A2A6A17A1U1) and variable divisor (A2A6A17U3 through A2A6A17U5) circuits are basically similar to the corresponding circuits of the 10 kHz/1 kHz/100 Hz synthesizer except for component values.

3-239. The VCO output from pin 3 of LC oscillator A2A6A17A1U1 is applied through emitter follower A2A6A17A1Q1 to a programmable frequency divider network consisting of integrated circuits A2A6A17U2A (or U2B) through A2A6A17U6. This network divides the VCO output frequency by a number in the range of 224 to 233 or 324 to 333 as determined by the setting of the front panel 100 kHz control and the state of the hi-lo band control line at pin 7 of A2A6A17-P1. From pin 15 of A2A6A17U6, the divider network output is applied to input pin 3 of phase detector A2A6A17U1.

3-240. The phase detector produces an error correction output proportional to the phase difference between the divider network output signal and the 100 kHz reference signal from Frequency Generator Subassembly A2A6A16. The VCO output is phase-locked to the 100 kHz reference signal as previously described. Since the phase-locked loop maintains the programmable frequency divider output at exactly 100 kHz, the VCO output is a discrete frequency in the range of 22.4 to 23.3 MHz (lo-band) or 32.4 to 33.3 MHz (hi-band).

3-241. Programmable divider network A2A6A17U2A (or U2B) through A2A6A17U6 functions in a similar manner, other than extent of counting, as the 10 kHz/1 kHz/100 Hz synthesizer divider network. The front panel 100 kHz control is coupled to coding switch A2A6S3 via a mechanical chain-drive mechanism. For each position of the front panel control, the coding switch generates a unique, offset BCD word. This BCD word consists of open circuits and grounds, and is converted to standard BCD format (grounded and +5 V lines) by pull-up resistors. The BCD word is then applied to the data input (pins 1, 9, 10 and 15) of divider A2A6A17U3 to establish the preset counts.

3-242. When the front panel controls are set at 400 kHz, the data input to A2A6A17U3 is a BCD 8 (1000) (Note 1 of Figure 5-12). Divider A2A6A17U3 is preset to 8. Divider A2A6A17U4 is preset to 2 for 100 kHz control settings of 0 through 5, and to 3 for 100 kHz settings of 6 through 9. For 100 kHz control settings of 0 through 5 the logic level at either pin 10 or 9 of A2A6A17U3 is a logic high, through pull-up resistor A2A6A17R24 or A2A6A17R25. These levels are applied to NOR gate A2A6A17Q4 and A2A6A17Q5. The common collector (NOR gate output) will be a logic low, and A2A6A17U4 will be preset to 2. For 100 kHz settings of 6 through 9 both inputs to the NOR gate will be at a logic low so the NOR gate output will be at a logic high and A2A6A17U4 will be preset to three.

3-243. Divider A2A6A17U5 is preset to either 2 or 3 in response to the state of the hi-lo band control input at A2A6A17P1-7. Transistor A2A6A17Q3 converts the +20 V/ground control input into logic low/logic high levels for application to data pin 3 of A2A6A17U5. Thus, A2A6A17U5 is preset to 2 for a +20 V control input (lo-band) and to 3 for a ground control input (hi-band).

3-244. The VCO output is also applied to a conventional common-emitter amplifier A2A6A17Q1, which isolates the VCO from the output stage circuitry. The gain of A2A6A17Q1 is set by means of potentiometer A2A6A17R10 to establish the proper output signal level. The signal is applied from the collector of A2A6A17Q1 to bandpass filter A2A6A17L4 through A2A6A17L7, A2A6A17C15, A2A6A17C17 and A2A6A17-C18. This filter attenuates undesired signals outside the range of 22.4 to 33.3 MHz. Common emitter amplifier A2A6A17Q2 provides a low impedance output for filter assembly A2A6FL5.

3-245. 22.9/32.9 MHz FILTER SUBASSEMBLY (Figure 5-37). Filter assembly A2A6FL5 serves to remove unwanted spurious signals from the output of the 100 kHz A2A6A17 assembly. When the set is tuned to lo-band, the injection frequency is between 22.4 and 23.3 MHz; for a high band, the frequency is between 32.4 and 33.3 MHz. Filter assembly A2A6FL5 receives hi-lo band information from A2A6P1-20 to enable the internal hi-lo

band filter. Internal steering diodes direct the A2A6A17 output through either the high or low narrow band filters. The A2A6FL5 output is applied as the injection signal for use in the midfrequency mixing circuits of RF Translator Assembly A2A6A8.

3-246. 10 MHz/1 MHz SYNTHESIZER SUBASSEMBLY (Figure 5-39). The 10 MHz/1 MHz Synthesizer Subassembly A2A6A13 accepts a 500 kHz reference signal from Frequency Generator Subassembly A2A6A16 and a five-line tuning code (consisting of opens and grounds) from Code Generator Assembly A2A7. The A2A6A13 subassembly provides one of 17 injection frequencies in the range of 2.5 to 23.5 MHz to the high frequency mixer circuit of RF Translator Subassembly A2A6A8. The phase-locked loop operation is identical to that previously described for the 10 kHz/1 kHz/100 Hz and 100 kHz synthesizers; that is, the 20 to 50 MHz VCO output signal is applied through a programmable frequency divider network to establish one input to phase detector A2A6A13U1. Phase detector A2A6A13U1 then compares the phase of this signal with the phase of a 500 kHz reference signal supplied by Frequency Generator Subassembly A2A6A16, and generates a dc frequency correction voltage (via amplifier and loop filter A2A6A13U2, A2A6A13C3, A2A6A13R8) to lock the VCO on frequency.

3-247. Programmable dividers A2A6A13U7, A2A6A13U8 are preset, via data inputs to pins 3, 4, 5 and 6, in a similar manner as the previously described dividers (A2A6A16U7, A2A6A16U6, A2A6A17U3, A2A6A17U5, and A2A6A20U2, -U4, -U9, -U10 and -U5. A five-wire tuning code (consisting of open circuits and grounds) from Code Generator Assembly A2A7 is applied through filter assembly A2A6A13A1 to input pins 10 through 14 of programmable read-only memory A2A6A13U9. Each tuning code corresponds to a unique setting of the front panel MHz controls, and is converted to BCD format via A2A6A13U9. When, for example, the front panel controls are set to 19 MHz, the input to code lines 1 through 5 will be G, G, G, O, O (where "G" represents a ground and "O" represents an open circuit) as shown in table 3-2.

3-248. The grounded and open lines are converted to logic low and logic high levels, respectively, via pull-up resistors, and the input code 0, 0, 0, 1, 1 is applied to pins 10 through 14 of A2A6A13U9. Pins 7 and 6 of A2A6A13U9 then apply the code, 0, 0 to data pins 4 and 3 of A2A6A13U8, which is thereby preset to 4 (Pin 5 being a 1 and pin 6 a 0). In like manner, pins 3, 4, 5, and 9 of A2A6A13U9 preset the count of A2A6A13U7 at nine. Since the dividers are in a cascade configuration, they begin their count in this instance at 49. Again because of the aforementioned cascading effect (Paragraph 3-226) they arrive at their cycle end count of 99 eight pulses early, thus leaving a net effective increment of only 42 instead of the 50 otherwise expected in counting from 49 to 99. Thus the net effect is that the input frequency at pin 2 of A2A6A13U7 is divided by 42 when it appears at output pin 15 of A2A6A13U8 for application to the phase detector, A2A6A13U1. In general, the available input codes to U9 can set the divider chain to most integral divisors from 20 to 50.

3-249. The VCO output signal is applied to programmable dividers A2A6A13U7, A2A6A13U8 through fixed divider A2A6A13U5. Assuming that the front panel controls are set at 19 MHz and that the VCO is phase-locked to the reference signal at pin 1 of A2A6A13U1, a 42.0 MHz signal from pin 3 of LC oscillator A2A6A13U3 is applied through emitter follower A2A6A13Q1 to pin 6 of A2A6A13U4B. A2A6A13U4B and A2A6A13U4A provide logic level conversion and buffering for reliable operation of divider A2A6A13U5. A2A6A13U5 then provides output signals of 21, 10.5, and 5.25 MHz at pins 3, 2, and 6, respectively. In general, selection of one of the three U5 output signals (for routing to Filter Assembly A2A6A14) is accomplished by gating circuitry in response to steering signals from pins 1, 2 and 9 of read-only memory A2A6A13U9. In this instance the 10.5 MHz output from pin 2 of U5 will be gated through U6C via a logic low from pin 2 of U9 applied to pin 12 of U6C. Meanwhile with the programmable divider network being preset, in this case, to divide by 42, the 21 MHz signal from pin 3 of U5 appears as a 500 kHz signal at input pin 3 of phase detector A2A6A13U1, as required for the phase-locked condition.

3-250. The gating circuitry A2A6A13U6A, -U6B and -U6D) selects the proper output from divider A2A6A13U5 and also selects the appropriate filter network within 10 MHz/1 MHz Filter Subassembly A2A6A14 (Figure 5-40). If, for example, pins 1 and 2 of A2A6-A13U9 are at logic low and logic high levels, respectively, NAND gate A2A6A13U6A (NOR gate operated as a negative logic NAND) will open and pass the 5.25 MHz output of A2A6A13U5 to output connector A2A6A13A1P1A2. The logic low level at pin 2 of A2A6A13U6A is also applied to transistor switch A2A6A14Q1, which then applies operating voltage to the 2.5 to 5.5 MHz filter network. In a similar manner, NAND gate A2A6A13U6C selects the 10.5 MHz output of A2A6A13U5 whenever output pin 2 of A2A6-A13U9 is at a logic low level (which is also applied to transistor switch A2A6A14Q4).

3-251. Selection of the 21 MHz output from A2A6A13U5 is accomplished by a logic low from pin 9 of A2A6A13U9 applied to NAND gate A2A6A13U6D-9. This condition only occurs when the 2.5 to 5.5 MHz or 7.5 to 12.5 MHz range is disabled. This condition also applies operating voltage, via transistor switch A2A6A14Q7, to the 14.5 to 23.5 MHz filter network in 10 MHz/1 MHz Filter Subassembly A2A6A14.

3-252. 10 MHz/1 MHz Filter SUBASSEMBLY (Figure 5-40). The 10 MHz/1 MHz Filter Subassembly A2A6A14 filters the outputs of 10 MHz/1 MHz Synthesizer Subassembly A2A6A13. A2A6A14 contains three separate units: a 4 MHz bandpass filter, a 10 MHz bandpass filter, and a 19 MHz bandpass filter. These circuits perform identically and differ only in the electrical values of their component parts. Each circuit filters a specific portion of the 10 MHz/1 MHz Synthesizer output band. Only one circuit at a time is active, as selected by the outputs of read-only memory A2A6A13U9. Since circuit performance is identical for all three circuits, only the 4 MHz circuit operation will be described.

3-253. The 2.5 to 5.5 MHz injection signal from A2A6A13 at A2A6A14P1A1 is coupled through A2A6A14C1 to the base of amplifier A2A6A14Q2. At the same time a control signal (ground) applied at A2A6A14P1-1 turns on transistor switch A2A6A14Q1, which applies operating voltage to amplifier A2A6-A14Q2 and to buffer A2A6A14Q3. The conventional, untuned amplifier A2A6A14Q2 utilizes shunt peaking inductor A2A6A14L1 and a partially bypassed emitter resistance (provided by capacitor A2A6A14C4) to establish uniform gain over the 2.5 to 5.5 MHz frequency range. The voltage gain of A2A6-A14Q2 is adjusted by means of potentiometer A2A6A14R7. From the collector of A2A6-A14Q2, the amplified 2.5, 3.5, 4.5, or 5.5 MHz signal is coupled through A2A6A14C2 to a bandpass filter consisting of A2A6A14L2 through A2A6A14L5, A2A6A14C3, and A2-A6A14C5, A2A6A14C6.

3-254. The bandpass filter attenuates signals outside the 2.5 to 5.5 MHz frequency range, and applies the desired signal through A2A6A14C7 to the base of emitter follower A2A6A14Q3. The emitter of A2A6A14Q3 provides a low impedance injection signal source through capacitor A2A6A14C29 for the subassembly output at A2A6A14P1A4. Resistors A2A6A14R9, A2A6A14R10 provide operating bias for A2A6A14Q3, while A2A6-A14C8 and A2A6A14L6 provide power supply decoupling. Buffers A2A6A14Q3, A2A6A14-Q6, and A2A6A14Q9 utilize A2A6A14R31 as the same emitter resistor.

3-255. POWER SUPPLY SUBASSEMBLY (Figure 5-41). The Power Supply Subassembly A2A6A15 accepts +20 V from Filter Subassembly A2A6A7 and generates the +5 V required for operation of the translator/synthesizer subassemblies. A solid state switching regulator design provides high efficiency and minimizes dissipation in the regulating elements, and employes two separate current-limiting stages to protect the supply. The +20 V input is filtered by capacitors A2A6-A15C2 and A2A6A15C3, C16 and applied to voltage comparator A2A6A15U1, which is configured as a free-running oscillator via the regenerative feedback through resistor A2A6A15R2 and capacitor A2A6A15C1. Dropping resistors A2A6A15R1, A2A6A15R3 and feedback resistor A2A6A14R4 provide a voltage reference at input pin 2 to maintain a constant amplitude 30.4 to 33.6 kHz square wave output at pin 7.

3-256. The output at pin 7 of A2A6A15U1 is applied through low-pass filter A2A6A15R6

and C4 to the reference input (pin 5) of voltage regulator A2A6A15U2. A2A6A15U2 applies a regulated 5 volt square wave from output pin 2 to switch driver A2A6A15Q1. This large value of base bias rapidly drives A2A6A15Q1 into conduction, and the collector of A2A6A15Q1 provides base bias for switch A2A6A15Q3 (which is also overdriven to provide a fast turn-on time). During the time that A2A6A15Q1, Q3 are saturated, energy is stored in inductor A2A6A15L1 and capacitors A2A6A15C9, C10 as well as being supplied to the load. During the time that A2A6A15Q1 and Q3 are off, the energy stored in A2A6A15L1, C9 and C10 is used to energize the load, with power diode A2A6A15CR2 providing the return path for the current. The current through A2A6A15L1 is from the input when Q1 and Q3 are on, and to ground through CR2 when Q1 and Q3 are off. Coil A2A6A15L2 provides power supply decoupling for succeeding stages.

3-257. Regulation of the filtered +5 V at A2A6A15E4 is provided by feedback voltage dividers A2A6A15R14 through A2A6A15R16. This network applies feedback to pin 6 of A2A6A15U2. The switching duty cycle is controlled by this feedback voltage, so that if the output voltage increases, the feedback voltage to A2A6A15U2-6 also increases, causing the duty cycle to decrease and thereby the output voltage to decrease to the required value. Resistor A2A6A15R15 is selected to provide a +5.1 to +5.2 V output voltage for a 2 ampere output current level. The current through switch A2A6A15Q3 flows through series resistor A2A6A15R9. This provides bias on current limiter A2A6A15Q2. When the voltage drop across A2A6A15R9 becomes large enough to forward bias A2A6A15Q2, the current limiter transistor functions as the control element. A2A6A15Q2 applies feedback through resistor A2A6A15R13 to input pin 6 of A2A6A15U2, thus reducing the output voltage of the circuit. Resistor A2A6A15R11 limits the base current of A2A6A15Q2. Capacitor A2A6A15C5 ensures that A2A6A15Q2 does not turn on from current spikes through A2A6A15Q3, caused by recovering the stored energy through power diode A2A6A15CR2. Current limiting is provided for the booster output A2A6A15U2-2 by connecting the regulated output from A2A6A15U2-8 through resistor A2A6A15R8 to the current limiting input A2A6A15U2-1. These current limiting circuits protect the power supply against damage due to a short-circuited output. The current limiters also keep the regulator operating in the switching mode to prevent excessive dissipation in switch A2A6A15Q3.

CHAPTER 4

SCHEDULED MAINTENANCE

4-1. INTRODUCTION.

4-2. This chapter contains preventive maintenance procedures and performance test instructions for Radio Receiver R-1051H/URR to be accomplished on a scheduled basis. Included are a scheduled maintenance action index; procedures required to inspect and clean the equipment; and step-by-step procedures necessary to verify that the equipment is operating satisfactorily within standards in all modes of operation.

NOTE

The scheduled maintenance instructions in this manual are cancelled when the Planned Maintenance System (PMS) is implemented for this equipment aboard your ship or station.

4-3. SCHEDULED MAINTENANCE ACTION INDEX.

4-4. Table 4-1 includes all scheduled and unscheduled maintenance procedures and performance tests. The periodicity column gives the scheduled interval between performance of these procedures. The periodicity symbols are as follows:

Interval	Symbols
Weekly	W
Monthly	M
Quarterly	Q
Semiannually	S
Annually	A
Unscheduled	U

The maintenance action column lists the maintenance action which corresponds to the periodicity symbol in column 1, and the reference column states the number of the table that contains the procedure listed in column 2. Performance tests identified by periodicity symbol U are unscheduled and are to be performed only at the time of installation or overhaul, or when the result from a related scheduled procedure indicates trouble.

4-5. PREVENTIVE MAINTENANCE PROCEDURES.

4-6. SAFETY PRECAUTIONS. The attention of officers and operating personnel is directed to NAVSEA 0967-LP-000-0100, Electronics Installation Maintenance Book - General, or superseding precautions to be observed. While every practicable safety precaution has been incorporated into this equipment, the following rules must be strictly observed.

WARNING

Failure to comply with the following instructions may result in severe electrical shock. Maintenance personnel must at all times observe all safety regulations.

a. Make sure you are not grounded whenever making measurements or adjustments. For example, hand rails, exposed metal decks, or equipment frames may provide inadvertent ground contacts.
b. Ground case of test equipment whenever possible, and before starting measurements where test equipment must be held or adjusted during the measurements.
c. Do not change tubes or make adjustments inside equipment with high voltage supply on. To avoid casualties, always remove power from receiver and connect a ground first. Under certain conditions, dangerous potentials may exist in circuits with power controls in the OFF position, due to charges retained by capacitors.
d. Be careful even when measuring low voltages. Do not forget that high

voltages may be present across terminals which are normally low voltage.

e. Interlock switches are safety devices for removing hazardous voltages from equipment, and should be operated only by authorized maintenance personnel. Do not defeat interlock switch unless specifically instructed to do so in the test conditions portion of the performance test to be performed. Never completely rely on any door or safety interlock to remove voltage from the equipment; always measure or test to ensure that voltages are not present. Where possible, shut down motors/generators or other power equipment to ensure your protection.

4-7. Table 4-2 gives all procedures required to inspect and clean the receiver.

4-8. SCHEDULED PERFORMANCE TESTS.

4-9. PROCEDURES. Tables 4-3 through 4-16 contain detailed procedures for accomplishing the performance tests scheduled on a weekly, monthly, quarterly, semiannual, annual, or unscheduled basis, respectively. The title and description of the test, safety precautions, the minimum rating of the technician expected to perform the test, procedures, and references to troubleshooting or corrective actions are given with each of the detailed performance test procedures. It is recommended that each test procedure be read through to its completion before the test is begun. Figure 4-1 shows the locations of connector pins on the receiver chassis assembly; figure 4-2 shows the method of fabricating the impedance adapter required by the procedure in table 4-15.

Table 4-1. Scheduled Maintenance Action Index

PERIODICITY	MAINTENANCE ACTION	REFERENCE
W	1. Check receiver overall operation.	Table 4-3
M	1. Clean R-1051H/URR Exterior.	Table 4-2
	2. Check Internal Frequency Standard A2A5, adjustment of 5 MHz oscillator and automatic switching action.	Table 4-4
	3. Check interlock switch operation and Control Assembly A2A13 +20 Vdc regulation.	Table 4-5
Q	1. Check receiver sensitivity.	Table 4-6
	2. Check receiver tuning.	Table 4-11
	3. Check and record AGC performance and IF gain.	Table 4-7
S	1. Clean R-1051H/URR interior.	Table 4-2
	2. Clean and inspect chain drive mechanism.	Table 4-2
	3. AUDIO LEVEL meter calibration.	Table 4-9
A	1. Check mechanical synchronization.	Table 4-8
U	1. Check voltage outputs of Control Assembly A2A13.	Table 4-10
	2. Check performance of RF Amplifier Assembly A2A4.	Table 4-12
	3. Check performance of Translator/ Synthesizer Assembly A2A6.	Table 4-13
	4. Check performance of Mode Selector Assembly A2A1.	Table 4-14
	5. Check performance of IF/Audio Amplifier Assemblies A2A2 and A2A3.	Table 4-15
	6. Check outputs of Frequency Standard Assembly A2A5.	Table 4-16

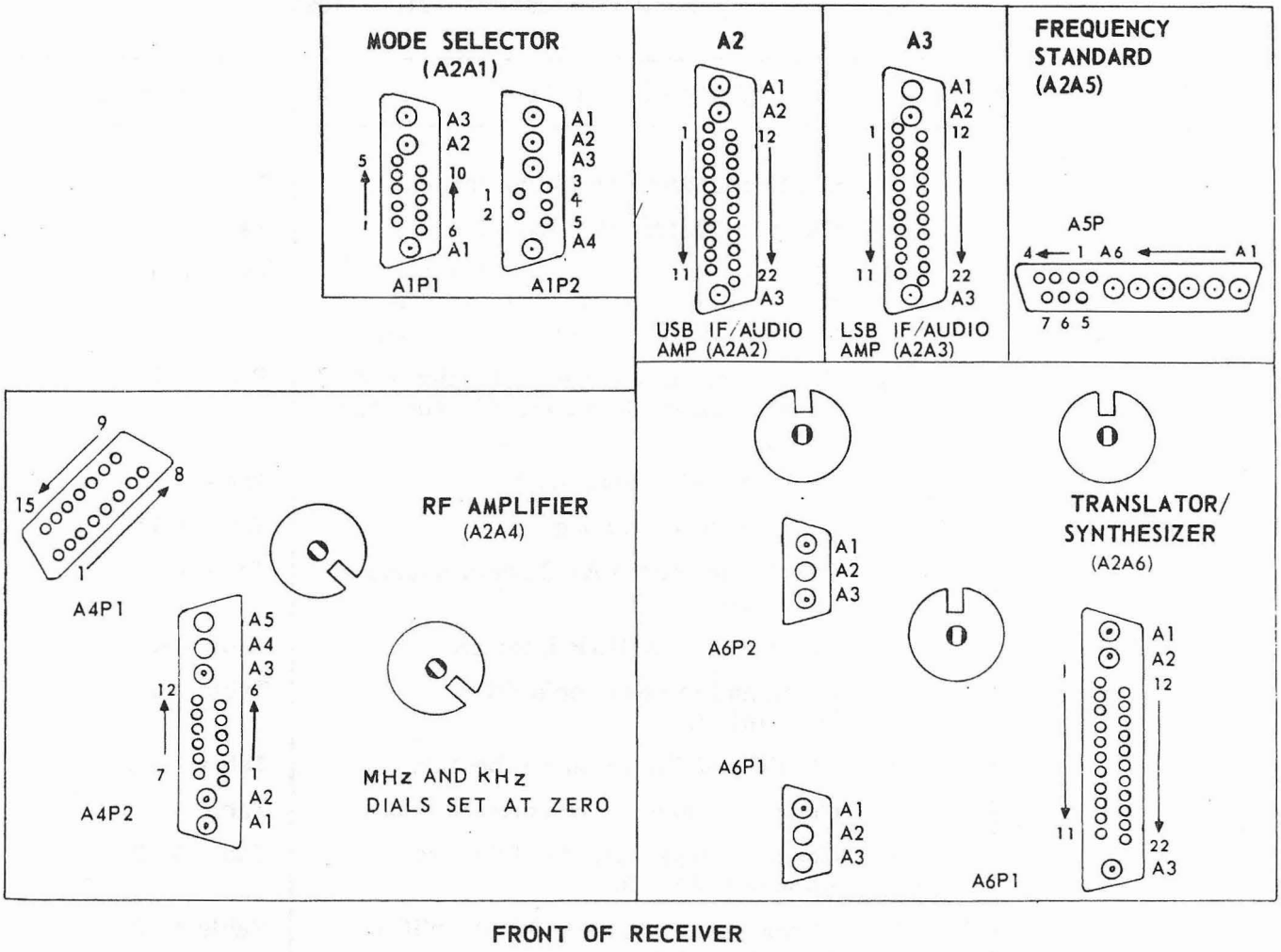

Figure 4-1. Chassis Assembly Connector Pin Location Diagram
(Top View)

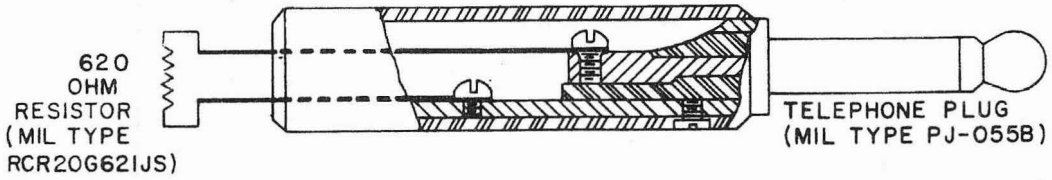

Figure 4-2. Fabrication of 600 Ohm Impedance Adapter

Table 4-2. Preventive Maintenance Procedures

TYPE OF MAINTENANCE	TOOLS/ MATERIAL/PARTS REQUIRED	PERSONNEL LEVEL	PROCEDURE
Exterior cleaning (M1)	Clean cloth Hot soapy water	RMSN	Dampen cloth with hot soapy water and wipe front panel.
	WARNING Do not tamper with interlock switch when chassis assembly is extended from case for cleaning or inspection.		
Interior cleaning (S1)	Clean cloth Sash brush	RMSN	Set MODE SELECTOR Switch A2A14S2 to OFF. Disconnect cable to connector A1A1J3 on back panel of receiver. Loosen front panel screws and slide chassis assembly out of case. Clean interior with a clean cloth and a clean sash brush. Slide chassis back into case and tighten front panel screws. When finished reconnect cable disconnected above.
Chain drive cleaning and inspecting (S2)	Clean cloth	ET3	Set MODE SELECTOR switch to OFF. Loosen front panel screws, slide chassis out of case, and tilt 90 degrees to expose bottom. Rotate each kHz control on front panel through all positions. Check drive chains

Table 4-2. Preventive Maintenance Procedures (Cont.)

TYPE OF MAINTENANCE	TOOLS/ MATERIAL/PARTS REQUIRED	PERSONNEL LEVEL	PROCEDURE
Chain drive cleaning and inspecting (Cont.)			for excessive slack resulting in excessive play in control. Check that gears rotate evenly, without slipping, from one position to another. Check that all screws and hardware on gear assemblies are securely tightened. Inspect gears and drive chains for corrosion, damage, or noticeable wear. Wipe dust from all parts with clean cloth. Return chassis to horizontal position, slide back into case, and tighten front panel screws.

Table 4-3. Overall Receiver Check

MINIMUM TECHNICIAN RATING REQUIRED FOR CHECK: ET3
OPERATING CONDITIONS AND CONTROL SETTINGS:
Receiver: Energized
MODE SELECTOR Switch A2A14S2: CW
AUDIO LEVEL meter switch A2A14A12S1: USB, 20 dBm
MGC/AGC switch A2A14S3: SLOW
Hz switch A2A14A11S1: 000
USB LINE LEVEL control A2A14R2: Fully counterclockwise
GAIN control A2A14R3: Fully clockwise

STEP NO.	ACTION REQUIRED	READ INDICATION ON	REFERENCE STANDARD
W1	Check receiver operation.	Headset AUDIO LEVEL meter	(a)_____ Check

PROCEDURE: Tune receiver to station WWV or WWVH at 5, 10, 15, or 20 MHz. Plug headset into PHONE USB jack A2A14J2. Adjust USB LINE LEVEL control A2A14R2 and PHONE USB VOL control A2A14R5 for a comfortable level.

Check that signal is received in headset, and that BFO tone varies when BFO control A2A14R6 is rotated. Also check for a variable indication on AUDIO LEVEL meter. Change USB AUDIO LEVEL meter switch as required.

Set MODE SELECTOR switch A2A14S2 to USB. Tune receiver 1 kHz lower than WWV carrier, and check that signal is heard in headset. Set MODE SELECTOR switch to RATT and ISB. Check that signal is heard in headset for each position.

Set MODE SELECTOR switch and AUDIO LEVEL meter switch to LSB +20 dBm. Tune receiver 1 kHz higher than WWV carrier, plug headset into PHONE LSB jack A2A14J1, and set LSB LINE LEVEL control A2A14R1 and PHONE LSB VOL control A2A14R4 for a comfortable signal level. Check that signal is heard in headset. Set MODE SELECTOR switch to ISB and check that signal is heard in headset.

Set Hz switch A2A14A11S1 to V (vernier) and rotate Hz vernier control A2A14A11R1. Check that audio signal level and frequency varies, both as heard in headset and as indicated on AUDIO LEVEL meter. Change AUDIO LEVEL meter switch as required. Return Hz switch A2A14A11S1 to 000.

Table 4-3. Overall Receiver Check (Cont.)

STEP NO.	ACTION REQUIRED	READ INDICATION ON	REFERENCE STANDARD
W1 (Cont.)	Set MODE SELECTOR Switch A2A14S2 to AM. Plug headset into PHONE USB jack A2A14J2. Tune receiver to a known AM station, such as at Armed Forces station frequency 15.330 MHz. Check that signal is heard in headset. If all checks are satisfactory, check at (a). TROUBLESHOOTING: Table 5-5.		

Table 4-4. Frequency Standard Tests

MINIMUM TECHNICIAN RATING REQUIRED FOR CHECK: ET3
OPERATING CONDITIONS AND CONTROL SETTINGS:
Receiver: Energized, with chassis assembly extended from case
MODE SELECTOR Switch A2A14S2: USB
USB LINE LEVEL control A2A14R2: Midrange
LSB LINE LEVEL control A2A14R1: Midrange
GAIN control A2A14R3: Fully clockwise
AUDIO LEVEL meter switch A2A14A12S1: USB, +10 dBm
Frequency controls: 2.010 MHz

STEP NO.	ACTION REQUIRED	READ INDICATION ON	REFERENCE STANDARD
M2	Check Internal Frequency Standard A2A5, adjustment of 5 MHz oscillator and automatic switching action.	Headset Stop Watch AUDIO LEVEL meter	(a)_____ Check (b)_____ Check (c)_____ sec (20 minimum)

PRELIMINARY NOTES:

1. Only Frequency Standards supplied with or for R-1051H/URR Receivers have the Automatic Switching feature. Earlier type A2A5 modules, although operationally interchangeable if installed after initial installation, do not require reference standard (a) or (b) to be met.

2. Since the time to stabilize the internal oscillator is dependent on several conditions, the 96 hour preheat time requirement is only necessary when reference standard (c) cannot be met in less than 96 hours.

3. The 5 MHz OSC SOURCE switch on A2A5 assembly should be set to the EXT NORMAL position for actual operation when there is 5 MHz present at EXT 5 MHz IN jack A1J25. The only exception is when it is desired to use receiver while heating (stabilizing) the internal oscillator for test or adjustment. Installations not having 5 MHz from external source must use internal oscillator.

PROCEDURE: Determine if receiver installation has an external 5 MHz present at EXT 5 MHz IN jack A1J25, on rear of receiver. If not present connect an external 5 MHz source from Frequency Standard AN/URQ-23 or equivalent to A1J25. The amplitude of the 5 MHz signal should be between 0.5 and 2.5 Vrms.

Table 4-4. Frequency Standard Tests (Cont.)

STEP NO.	ACTION REQUIRED	READ INDICATION ON	REFERENCE STANDARD
M2 (Cont.)	Set the 5 MHz OSC SOURCE switch to INT/COMP position. Indicator lamp A2A5A2DS1 will vary in intensity as soon as internal oscillator is near 5 MHz (approximately 20 Hz or less). When the rate of change has appeared to stop, commence measuring the cycling time. Measure from time lamp brilliance just becomes visible until once again it is just becoming visible. If time is 20 seconds or longer record time at (c) in reference standards column. If not, adjust in accordance with Special Procedure 5 as described in Front Matter of Maintenance Standards Book EE125-AF-MSB-010/E110-R1051H. Connect antenna to receiver and tune receiver to obtain a normal signal output on either headset or front panel meter. Open receiver, defeat interlock, and set 5 MHz OSC SOURCE switch located on top of frequency standard assembly to EXT NORMAL if not in that position. Note that signals are still present at receiver output. Set switch to EXT (OVEN STBY) and again note signals present at receiver output. Set switch to INT/COMP position and again note signals present at output of receiver. Check at (a) in reference standards column if signals present at receiver output in all three positions. Set switch to EXT NORMAL and delay further testing for about 30 minutes or until internal oscillator has changed temperature providing difference in pitch of receiver signal when changing switch from internal to external source. Set 5 MHz OSC SOURCE switch to EXT (OVEN STBY) position. Remove the 5 MHz external source from A1J25 while listening for or observing received signal. There should be only a momentary disruption of received signal. Replace 5 MHz external source to A1J25. Set switch to EXT NORMAL. Again remove 5 MHz external source while listening for momentary disruption of signal. If switching action occurred in both positions, check at reference standard column (b). Reconnect the external 5 MHz source to A1J25. Return equipment to normal operating condition. TROUBLESHOOTING: Figure 5-27. CORRECTIVE ACTION: Table 6-5.		

Table 4-5. Safety Interlock and Regulated Supply Tests

MINIMUM TECHNICAL RATING REQUIRED FOR CHECK: ET3
OPERATING CONDITIONS AND CONTROL SETTINGS:
Receiver: Energized
Frequency controls: 2.010 MHz
MODE SELECTOR Switch A2A14S2: USB

STEP NO.	ACTION REQUIRED	READ INDICATION ON	REFERENCE STANDARD
M3	Check operation of interlock switch A1A2S1 and record regulation of +20V output of Control Assembly A2A13.	Digital Multimeter 89536-8800A/AA	(a)_____ Check (b)_____ Check (c)_____ Check (d)_____V (+19 to +21)

PROCEDURE: Check that indicator lamps are illuminated. Loosen front panel screws and withdraw chassis assembly from case. Observe that indicator lamps extinguish. Check at (a).

Pull interlock switch plunger out. Observe that indicator lamps are illuminated. Check at (b).

CAUTION

If meter indicates 0 Vdc or approximately +28 V, immediately turn MODE SELECTOR Switch A2A14S2 to OFF and correct faulty condition. Hand guide cable over edge of case to prevent damage when tilting chassis assembly.

Tilt chassis and connect digital multimeter to A2E11 (located on chassis assembly to the right of A2A13) and chassis ground. Record indication at (d). If this tolerance cannot be met, perform Control Assembly Check procedure 4 in Special Procedure described in Front Matter of Maintenance Standards Book EE125-AF-MSB-010/E110-R1051H.

Push interlock switch plunger in until lamps extinguish, disconnect multimeter, then push chassis assembly fully into case. Secure chassis assembly to case. Observe that indicator lamps are illuminated. Check at (c).

TROUBLESHOOTING: Figure 5-32.
CORRECTIVE ACTION: Table 6-7.

Table 4-6. Overall Receiver Sensitivity

MINIMUM TECHNICIAN RATING REQUIRED FOR CHECK: ET3
OPERATING CONDITIONS AND CONTROL SETTINGS:
Receiver: Energized
AUDIO LEVEL meter switch A2A14A12S1: USB, 0 dBm
MODE SELECTOR Switch A2A14S2: USB
MGC/AGC switch A2A14S3: OFF
Hz switch A2A14A11S1: 000
USB LINE LEVEL control A2A14R2: Midrange
LSB LINE LEVEL control A2A14R1: Midrange
GAIN control A2A14R3: Fully clockwise
Frequency controls: 2.010 MHz

STEP NO.	ACTION REQUIRED	READ INDICATION ON	REFERENCE STANDARD
Q1	Check receiver sensitivity and record. PROCEDURE: Disconnect cables attached to jacks A1A1J5 and A1A1J6 at rear of receiver, and terminate with 600 ohm loads. Disconnect antenna cable from A1J23. NOTE The reference standard readings obtained are output levels of the rf generator, and are to be interpreted as receiver sensitivity minimum values. For example, if the rf output required for a 10 dB signal plus noise to noise $\frac{(S + N)}{N}$ increase in audio level is greater than 0.6 uV reading at (a), receiver sensitivity is unsatisfactory. Connect Rf Signal Generator 28480-8660C to ANT 50 OHM jack A1J23 at rear of receiver or at antenna patch panel, using a BNC-to-N adapter and 50 ohm coaxial cable. Phase lock signal generator for 2.011 MHz, at zero output level.	Rf Signal Generator 28480-8660C with 86601A and 86632B Plug-ins Output Level Control	(a)____uV (0.6 max) (b)____uV (0.6 max) (c)____uV (0.6 max) (d)____uV (3.0 max) (e)____uV (0.9 max)

Table 4-6. Overall Receiver Sensitivity (Cont.)

STEP NO.	ACTION REQUIRED	READ INDICATION ON	REFERENCE STANDARD
Q1 (Cont.)	Adjust USB LINE LEVEL control A2A14R2 for -10 dB noise reference level as read on the AUDIO LEVEL meter A2A14M1. Turn the signal generator on and increase output level from below 0.1 uV until 0 dBm is read on AUDIO LEVEL meter. The output level of the signal generator should be not more than 0.6 uV. Record reading at (a). Set MODE SELECTOR Switch A2A14S2 and AUDIO LEVEL meter switch to LSB. Phase lock the signal generator at 2.009 MHz at zero output level. Repeat above procedure, substituting the LSB LINE LEVEL control A2A14R1 for the USB LINE LEVEL control A2A14R2; observe the signal generator output required is not more than 0.6 uV. Note this reading at (b). Set MODE SELECTOR Switch A2A14S2 and AUDIO LEVEL meter switch A2A14A12S1 to mode for the sideband having the poorest sensitivity, as determined by the larger of the signal generator output readings (USB and LSB) measured above. Measure receiver sensitivity at each frequency listed below as follows: Phase lock the signal generator frequency 1 kHz above or below each listed frequency (above if USB has been selected; below if LSB has been selected). Ensure that signal generator output level is set to zero. Adjust the appropriate USB or LSB LINE LEVEL control for -10 dBm noise reference level as read on the AUDIO LEVEL meter. Adjust signal generator frequency output attenuator for 0 dBm on the AUDIO LEVEL meter. Record output level of signal generator (sensitivity) for each frequency listed below, and check at (c) when each output level is not more than 0.6 uV.		

Table 4-6. Overall Receiver Sensitivity (Cont.)

STEP NO.	ACTION REQUIRED	READ INDICATION ON	REFERENCE STANDARD

Q1 (Cont.)

FREQUENCY (MHz)

3.101	12.010	21.010
4.222	13.010	22.010
5.333	14.010	23.010
6.444	15.010	24.010
7.555	16.010	25.010
8.666	17.010	26.010
9.777	18.010	27.010
10.898	19.010	28.010
11.989	20.010	29.010

NOTE

It is important to test all the above frequencies to ensure that receiver meets reference standard at all selected combinations of digits.

Set receiver frequency controls for 2.010 MHz, MODE SELECTOR Switch A2A14S2 to AM, and AUDIO LEVEL meter switch A2A14A12S1 to USB 0 dBm. Set signal generator to 2.010 MHz in the phase-locked mode, with 1000 Hz at 30 percent modulation.

Adjust signal generator output attenuator to approximately 2.5 uV and USB LINE LEVEL control A2A14R2 for a peak on-scale indication of 0 dBm on the AUDIO LEVEL meter.

Switch signal generator to continuous wave, and adjust USB LINE LEVEL control A2A14R2 for an indication of -10 dBm on the AUDIO LEVEL meter. Switch signal generator to 1000 Hz at 30 percent modulation, and adjust signal generator attenuator for 0 dBm on the AUDIO LEVEL meter.

Repeat step above until the AUDIO LEVEL meter reads -10 dBm and 0 dBm, respectively, when the signal generator is switched from continuous wave to 1000 Hz (30 percent) modulation and no further adjustment of the USB LINE LEVEL control A2A14R2 or the signal generator attenuator is required. The output level of signal generator (AM sensitivity) should be not more than 3.0 uV. Record reading at (d).

Table 4-6. Overall Receiver Sensitivity (Cont.)

STEP NO.	ACTION REQUIRED	READ INDICATION ON	REFERENCE STANDARD
Q1 (Cont.)	Set MODE SELECTOR Switch A2A14S2 to CW, and BFO control A2A14R6 to midrange. Phase lock the signal generator at 2.010 MHz, continuous wave. Adjust signal generator output to 0.9 uV. Set BFO control A2A14R6 for a peak reading on the AUDIO LEVEL meter. Adjust USB LINE LEVEL control A2A14R2 to measure 0 dBm on the AUDIO LEVEL meter. Turn GAIN control A2A14R3 to reduce AUDIO LEVEL meter reading by 3 dBm. In the unlocked mode, set signal generator to approximately 20 kHz off frequency, and adjust USB LINE LEVEL control A2A14R2 for -10 dBm indication on AUDIO LEVEL meter. Reset frequency control on signal generator for 2.010 MHz (phase locked) and readjust signal generator attenuator for 0 dBm reading on the AUDIO LEVEL meter. The output level of the signal generator (CW sensitivity) should be not more than 0.9 uV. Record reading at (e). Remove loads and reconnect cables to A1A1J5 and A1A1J6; disconnect test equipment. TROUBLESHOOTING: Figures 5-20 and 5-22. CORRECTIVE ACTION: Tables 6-4 and 6-5.		

Table 4-7. Receiver Tuning

MINIMUM TECHNICIAN RATING REQUIRED FOR CHECK: ET3
OPERATING CONDITIONS AND CONTROL SETTINGS:
Receiver: Energized, with chassis assembly extended from case
Interlock switch A1A2S1: Pulled out
MODE SELECTOR Switch A2A14S2: USB
AUDIO LEVEL meter switch A2A14A12S1: USB, +10 dBm
MGC/AGC switch A2A14S3: SLOW
5 MHz OSC SOURCE switch: INT/COMP
USB LINE LEVEL control A2A14R2: Fully counterclockwise
LSB LINE LEVEL control A2A14R1: Fully counterclockwise
PHONE USB VOL control A2A14R5: Fully clockwise
PHONE LSB VOL control A2A14R4: Fully clockwise
GAIN control A2A14R3: Fully clockwise
Frequency controls: 4.9965 MHz

STEP NO.	ACTION REQUIRED	READ INDICATION ON	REFERENCE STANDARD
Q2	Check receiver tuning. PROCEDURE: Connect rear-panel INT 5 MHZ OUT jack A1J24 to ANT 50 OHMS jack A1J23 using a BNC-to-N adapter and 50 ohm coaxial cable; connect the 1 MHz output of the AN/URQ-23 to the external frequency jack at the rear of the electronic counter and operate the counter on external standard. Connect the counter to front panel PHONE USB jack A2A14J2. Adjust USB LINE LEVEL control A2A14R2 so that the signal level displayed on AUDIO LEVEL meter is 0 dBm. Observe that electronic counter reads 3500 Hz. Record reading at (a). Change receiver frequency to 4.9975 MHz. Record counter reading at (b). Change frequency to 4.9985 MHz. Record counter reading at (c). Change receiver frequency to 4.9995 MHz. Record counter reading at (d). Set MODE SELECTOR Switch A2A14S2 and AUDIO LEVEL LEVEL meter switch to LSB +10 dBm, and set frequency controls for 5.0035 MHz. Connect electronic counter to PHONE LSB jack A2A14J1 and adjust LSB LINE LEVEL LEVEL control A2A14R1 so that the signal level displayed on AUDIO LEVEL meter is 0 dBm. Observe that electronic counter reads 3500 Hz. Record counter	Electronic Counter 28480-5328A-H99 AUDIO LEVEL meter	(a)____Hz (3500 ±1) (b)____Hz (2500 ±1) (c)____Hz (1500 ±1) (d)____Hz (500 ±1) (e)____Hz (3500 ±1) (f)____Hz (2500 ±1) (g)____Hz (1500 ±1) (h)____Hz (500 ±1) (i)____Check (100 Hz lock) (j)____Hz (1980 max) (k)____Hz (3020 min.) (l)____Check (2 kHz lock) (m)____Check (BFO)

Table 4-7. Receiver Tuning (Cont.)

STEP NO.	ACTION REQUIRED	READ INDICATION ON	REFERENCE STANDARD
Q2 (Cont.)	reading at (e). Change receiver frequency to 5.0025 MHz. Record counter reading at (f). Change receiver frequency to 5.0015 MHz. Record counter reading at (g). Change receiver frequency to 5.0005 MHz. Record counter reading at (h). Change receiver frequency to 5.0010 MHz, and observe that electronic counter reads 1000 Hz. Rotate Hz switch A2A14A11S1 from 000 through 900, observing that electronic counter increases in 100 Hz steps to 1900 Hz. Check at (i) if all indications are correct. Set receiver frequency to 5.0020 MHz. Rotate Hz switch A2A14A11S1 to V (vernier) position. Turn Hz vernier control A2A14A11R1 fully counterclockwise, and note that electronic counter reads 1980 Hz or lower. Record reading at (j). Turn Hz vernier control A2A14A11R1 fully clockwise, and note that electronic counter reads 3020 Hz or higher. Record reading at (k). Reset Hz switch A2A14A11S1 to 000, and note that electronic counter reading is 2000 Hz. Check at (l) if indication is correct. Remove electronic counter from PHONE LSB jack A2A14J1. Set receiver frequency to 5.0000 MHz. Set MODE SELECTOR Switch A2A14S2 to CW. Connect headset to PHONE USB jack A2A14J2. Vary BFO control A2A14R6 from one extreme to the other, observing a zero-beat note near mid-range of control. Check at (m) if zero beat is near mid-range. After completion of checks, set 5 MHz OSC SOURCE switch A2A5A2S1 on Frequency Standard Assembly A2A5 to normal operating mode for installation at hand (usually EXT NORMAL). Remove test cable between jacks A1J23 and A1J24 on rear of receiver, and reconnect antenna cable to jack A1J23. If no further tests are to be performed, slide receiver chassis into case and secure front panel screws. TROUBLESHOOTING: Figures 5-28, 5-32. CORRECTIVE ACTION: Table 6-2.		

Table 4-8. Mechanical Synchronization Check

MINIMUM TECHNICIAN RATING REQUIRED FOR CHECK: ET3
OPERATING CONDITIONS AND CONTROL SETTINGS:
Receiver: Power off, chassis assembly extended from case
Interlock switch A1A2S1: Pushed in
MODE SELECTOR Switch A2A14S2: OFF
Frequency controls: 11.111 MHz

STEP NO.	ACTION REQUIRED	READ INDICATION ON	REFERENCE STANDARD
A1	Check chain-driven mechanical tuning mechanism.		_____ Check

PROCEDURE: Examine drive chains and sprockets for excessive wear or damage. Check tension of chains.

Remove RF Amplifier Assembly A2A4 and Translator/Synthesizer Assembly A2A6 from the chassis assembly. Observe that the coupling disks on the bottom of these assemblies are all set to 1.

Set the frequency controls for 00.000 MHz, and observe that the three mechanical coupler keyways for the Translator/Synthesizer Assembly A2A6 are toward the rear of the receiver.

Set the frequency controls for 00.660 MHz, and observe that the two keyways for the RF Amplifier Assembly A2A4 are toward the rear of the receiver.

Set the MHz and kHz controls to 00.000 and then to 29.999, and observe that the dial numbers appear centered in the dial windows above the controls at all positions.

CAUTION

Hand guide cable over edge of case to prevent damage when tilting chassis assembly.

Tilt chassis assembly 90 degrees to expose bottom.

Observe that the spring washer under each coupling disk on the chassis assembly has not been flattened enough to prevent engagement of the coupler when the RF Amplifier Assembly A2A4 and Translator/Synthesizer Assembly A2A6 are installed. Return chassis assembly to horizontal position.

Table 4-8. Mechanical Synchronization Check (Cont.)

STEP NO.	ACTION REQUIRED	READ INDICATION ON	REFERENCE STANDARD
A1 (Cont.)	Set frequency controls to 11.111 MHz, and reinstall RF Amplifier Assembly A2A4 and Translator/Synthesizer Assembly A2A6 in the receiver chassis and tighten four corner screws on each module. To ensure engagement of mechanical couplers, rotate each of the three kHz controls through all settings (0 through 9). Slide receiver chassis into case and secure it. Set MODE SELECTOR Switch A2A14S2 to STDBY or desired operational mode position. CORRECTIVE ACTION: Paragraphs 6-34, 6-35, 6-37, 6-38, and 6-40.		

Table 4-9. Audio Level Meter Calibration

MINIMUM TECHNICIAN RATING REQUIRED FOR CHECK: ET3
OPERATING CONDITIONS AND CONTROL SETTINGS:
Receiver: Energized
MODE SELECTOR Switch A2A14S2: USB
AUDIO LEVEL meter switch A2A14A12S1: USB, -10 dBm
GAIN control A2A14R3: Fully clockwise
Frequency controls: 2.010 MHz
MGC/AGC switch A2A14S3: OFF
USB LINE LEVEL control A2A14R2: Fully counterclockwise

STEP NO.	ACTION REQUIRED	READ INDICATION ON	REFERENCE STANDARD
S3	Check and record front panel meter accuracy. PROCEDURE: Disconnect antenna from ANT 50 OHMS jack A1J23 and connect output of Rf Signal Generator 28480-8660C to A1J23 input using a coaxial cable. Disconnect USB A1A1J5 audio output and connect 600 ohm load and ac voltmeter across output. Phase lock the output of signal generator at 2.011 MHz at 100 uV. Operate USB LINE LEVEL control A2A14R2 to obtain a midscale indication on AUDIO LEVEL meter. Adjust USB LINE LEVEL control for a -10 dBm indication on AUDIO LEVEL meter. Record ac voltmeter indication at (a). Adjust USB LINE LEVEL control to obtain an indication of 0 dBm on AUDIO LEVEL meter. Record ac voltmeter indication at (b). Place USB AUDIO LEVEL meter switch to USB 0 dBm position. Adjust USB LINE LEVEL control to obtain an indication of -10 dBm. Record ac voltmeter indication at (c).	Ac Voltmeter 28480-400E Rf Signal Generator 28480-8660C with 86601A and 86332B Plug-ins AUDIO LEVEL meter	(a)____dB (i)____dB (-19 to -21) (b)____dB (j)____dB (-9 to -11) (c)____dB (k)____dB (-9 to -11) (d)____dB (l)____dB (-1 to +1) (e)____dB (m)____dB (-1 to +1) (f)____dB (n)____dB (+9 to +11) (g)____dB (o)____dB (+9 to +11) (h)____dB (p)____dB (+17 to +19)

Table 4-9. Audio Level Meter Calibration (Cont.)

STEP NO.	ACTION REQUIRED	READ INDICATION ON	REFERENCE STANDARD
S3 (Cont.)	Adjust USB LINE LEVEL control to obtain an indication of 0 dBm. Record ac voltmeter indication at (d). Place AUDIO LEVEL meter switch to USB +10 dBm position. Adjust USB LINE LEVEL control to obtain an indication of -10 dBm. Record ac voltmeter indication at (e). Adjust USB LINE LEVEL control to obtain an indication of 0 dBm. Record ac voltmeter indication at (f). Place AUDIO LEVEL meter switch to USB +20 dBm position. Adjust USB LINE LEVEL control to obtain an indicatin of -10 dBm. Record ac voltmeter indication at (g). Adjust USB LINE LEVEL control to obtain an indication of -2 dBm. Record ac voltmeter indication at (h). Adjust LSB LINE LEVEL control fully counterclockwise. Place MODE SELECTOR Switch to LSB. Phase lock the output of signal generator at 2.009 MHz at 100 uV. Operate AUDIO LEVEL meter switch to LSB -10 dBm position. Adjust LSB LINE LEVEL control to obtain a midscale indication on AUDIO LEVEL meter. Remove 600 ohm load and ac voltmeter from USB audio output connector A1A1J5 and connect to LSB audio output connector A1A1J6. Repeat procedures for indications (a) through (h) and record indications at (i) through (p), substituting LSB in place of USB. Disconnect test equipment, reconnect antenna and audio output lines to normal operating condition, return chassis assembly to case and secure it. TROUBLESHOOTING: Figure 5-32.		

Table 4-10. Control Assembly Check

MINIMUM TECHNICIAN RATING REQUIRED FOR CHECK: ET3
OPERATING CONDITIONS AND CONTROL SETTINGS:
Receiver: Energized with chassis assembly extended from case and tilted vertically 90 degrees to expose bottom.
Interlock switch A1A2S1: Pulled out
MODE SELECTOR Switch A2A14S2: STDBY
GAIN control A2A14R3: Fully counterclockwise
MGC/AGC Switch A2A13S3: OFF

STEP NO.	ACTION REQUIRED	READ INDICATION ON	REFERENCE STANDARD
U1	Check and record control assembly voltages. PROCEDURE: Connect multimeter to A2E11 (bottom of chassis). Set MODE SELECTOR Switch A2A14S2 to LSB, and observe that meter indicates a voltage of approximately +20 V. Record at (a). If the meter indicates 0 Vdc or approximately +28 V, immediately turn the MODE SELECTOR Switch A2A14S2 to OFF and correct the faulty condition before proceeding. Set MODE SELECTOR switch to ISB. Connect the multimeter to measure positive voltage (+20 V with respect to ground) at A2E11. Record the voltage at (b). Connect the ac voltmeter to measure the ripple at A2E11. Use a shielded cable for the test probe when measuring this and all other ripple voltages. Exposed center conductor and shield ground must be no longer than one inch. Record the ripple voltage at (c). Measure voltages (using multimeter on appropriate dc range) and ripple (using ac voltmeter) between following tie points and ground. Record voltages and ripple voltages in Reference Standard Column: WARNING Dangerous voltage is present at A2E17. Exercise all necessary precautions to avoid electrical shock.	Digital Multimeter 89536-8800A/AA Ac Voltmeter 28480-400E	(a)_____V (+19.9 to +20.1) (b)_____V (+19 to +21) (c)_____mVrms (2 max) (d)_____V (-28.5 to -31.5) (e)_____V (+24 to +32) (f)_____V (+103 to +123) (g)_____mVrms (15 max) (h)_____mVrms (320 max) (i)_____mVrms (90 max)

Table 4-10. Control Assembly Check (Cont.)

STEP NO.	ACTION REQUIRED	READ INDICATION ON	REFERENCE STANDARD
U1 (Cont.)			

Tie Point	Record Voltage At	Record Ripple Voltage At
A2A14E8	(d)	(g)
A2E12	(e)	(h)
A2E17	(f)	(i)

If no further tests are to be performed, tilt chassis assembly back to horizontal position, slide chassis into case, and secure it.

TROUBLESHOOTING: Figure 5-32.
CORRECTIVE ACTION: Table 6-7.

Table 4-11. AGC Performance and IF Gain

MINIMUM TECHNICIAN RATING REQUIRED FOR CHECK: ET3
OPERATING CONDITIONS AND CONTROL SETTINGS:
Receiver: Energized
MODE SELECTOR Switch A2A14S2: USB
AUDIO LEVEL METER switch A2A14A12S1: USB, +10 dBm
MGC/AGC switch A2A14S3: SLOW
Hz switch A2A14A11S1: 000
USB LINE LEVEL control A2A14R2: Fully counterclockwise
LSB LINE LEVEL control A2A14R1: Fully counterclockwise
Frequency controls: 2.010 MHz

STEP NO.	ACTION REQUIRED	READ INDICATION ON	REFERENCE STANDARD
Q3	Check and record AGC performance and IF gain. PROCEDURE: Disconnect external cables to jacks A1A1J5 and A1A1J6 on rear of receiver. Connect 600 ohm loads between pins A and B of jacks A1A1J5 and A1A1J6. Disconnect antenna cable and connect Rf Signal Generator 28480-8660C with 86601A and 86632B plug-ins to ANT jack A1J23 at rear of receiver. Phase lock the signal generator to 2.011 MHz, continuous wave, with a 0.6 uVrms output. Rotate USB LINE LEVEL control A2A14R2 clockwise until AUDIO LEVEL meter reads 0 dBm. Record AUDIO LEVEL meter reading of 0 at (a). Set MODE SELECTOR Switch A2A14S2 to LSB and AUDIO LEVEL meter switch to LSB +10 dBm; set signal generator frequency to 2.0000 MHz, and repeat procedure above. Record reading of AUDIO LEVEL meter at (b). Set MODE SELECTOR Switch A2A14S2 to USB and AUDIO LEVEL meter switch to USB +20 dBm, set signal generator to 2.011 MHz, and adjust USB LINE LEVEL control A2A14R2 for -6 dBm on AUDIO LEVEL meter. Increase the signal generator output to 2.5 uV, and record reading of AUDIO LEVEL meter at (c). Increase signal generator output to 50 mV. AUDIO LEVEL meter should indicate not more than 3 dB above reading	AUDIO LEVEL meter Rf Signal Generator 28480-8660C with 86601A and 86632B Plug-ins	(a)_____dBm (0 min) (b)_____dBm (0 min) (c)_____dBm (-6 to 0) (d)_____dBm (3 dB above (c max) (e)_____dBm) (-3 to +1) (f)_____dBm (-6 to 0) (g)_____dBm (3 dB above f max) (h)_____dBm (-3 to +1)

Table 4-11. AGC Performance and IF Gain (Cont.)

STEP NO.	ACTION REQUIRED	READ INDICATION ON	REFERENCE STANDARD
Q3 (Cont.)	recorded at (c). Record AUDIO LEVEL meter reading at (d). Turn USB LINE LEVEL control fully clockwise and record AUDIO LEVEL meter reading at (e). Set MODE SELECTOR Switch A2A14S2 and AUDIO LEVEL meter switch to LSB +20 dBm. Reset signal generator output for 0.6 uV, set signal generator frequency to 2.009 MHz, and adjust LSB LINE LEVEL control A2A14R1 for an indication of -6 dBm on AUDIO LEVEL meter. Increase the signal generator output to 2.5 uV, and record indication on AUDIO LEVEL meter at (f). Increase the signal generator output to 50 mV. AUDIO LEVEL meter should indicate not more than 3 dB above reading noted at (f). Record AUDIO LEVEL meter reading at (g). Turn LSB LINE LEVEL control fully clockwise and record AUDIO LEVEL meter reading at (h). If no further tests are to be performed, disconnect test equipment and reconnect cables to A1A1J5 and A1A1J6. TROUBLESHOOTING: Figure 5-25. CORRECTIVE ACTION: Table 6-3.		

Table 4-12. Rf Amplifier Assembly Check

MINIMUM TECHNICIAN RATING REQUIRED FOR CHECK: ET3
OPERATING CONDITIONS AND CONTROL SETTINGS:
Receiver: Energized, with chassis assembly extended from case
Interlock switch A1A2S1: Pulled out
MODE SELECTOR Switch A2A14S2: USB
MGC/AGC switch A2A14S3: OFF
Hz switch A2A14A11S1: 000
USB LINE LEVEL control A2A14R2: Midrange
GAIN control A2A14R3: Fully clockwise
Frequency controls: 2.010 MHz

STEP NO.	ACTION REQUIRED	READ INDICATION ON	REFERENCE STANDARD
U2	Check and record performance of RF Amplifier Assembly A2A4.	Rf Millivoltmeter 04901-92B-S5	(a)_____mVrms (40 min) (b)_____dB (6 max) (c)_____ (Check)

PROCEDURE: Connect Rf signal Generator 28480-8660C with 86601A and 86632B plug-ins to receiver ANT 50 OHMS jack A1J23 using a BNC-to-N adapter and 50 ohm coaxial cable. In the phase-locked mode, set signal generator for 2.011 MHz, continuous wave, at 1000 uV. Connect rf millivoltmeter 04901-92B-S5 to test point A2A4TP3 on RF Amplifier Assembly A2A4.

NOTE

When chassis assembly is extended from case, radio frequency interference from other equipment may cause erratic readings at A2A6A8TP5 and A2A4TP3. If such a condition is encountered, this check should be performed in a shielded enclosure.

Record rf millivoltmeter reading (mVrms) at (a), and note rf millivoltmeter indication (dB) for next step.

Without changing frequency, connect rf millivoltmeter to test point A2A6A8TP5 on RF Translator Subassembly A2A6A8. The meter reading should not drop more than 6 dB from that noted at (a); if this is so, record at (b).

Table 4-12. Rf Amplifier Assembly Check (Cont.)

STEP NO.	ACTION REQUIRED	READ INDICATION ON	REFERENCE STANDARD
U2 (Cont.)	Repeat measurement at test point A2A4TP3 on the RF Amplifier Assembly A2A4 for each of the frequencies listed below, to verify that all readings are above 40 mVrms. Phase lock signal generator output 1 kHz above receiver frequency for each measurement. Check at (c) if all readings are correct.		

RECEIVER FREQUENCY CHART (MHz)

3.101	12.010	21.010
4.222	13.010	22.010
5.333	14.010	23.010
6.444	15.010	24.010
7.555	16.010	25.010
8.666	17.010	26.010
9.777	18.010	27.010
10.898	19.010	28.010
11.989	20.010	29.010

If no further tests are to be performed, disconnect all test equipment, slide receiver chassis into case and secure it; reconnect antenna cable to ANT 50 OHMS jack A1J23.

TROUBLESHOOTING: Figure 5-20.
CORRECTIVE ACTION: Table 6-4.

Table 4-13. Translator/Synthesizer Check

MINUMUM TECHNICIAN RATING REQUIRED FOR CHECK: ET3
OPERATING CONDITIONS AND CONTROL SETTINGS:
Receiver: Energized, chassis assembly extended from case
Interlock switch A1A2S1: Pulled out
5 MHz OSC SOURCE switch A2A5A2S1: EXT NORMAL
MODE SELECTOR Switch A2A14S2: CW
MGC/AGC switch A2A14S3: OFF
USB LINE LEVEL control A2A14R2: Midrange
LSB LINE LEVEL control A2A14R1: Midrange
Hz switch A2A14A11S1: 000
GAIN control A2A14R3: Fully counterclockwise
Frequency controls: 2.000 MHz

STEP NO.	ACTION REQUIRED	READ INDICATION ON	REFERENCE STANDARD
U3	Check IF output of Translator/ Synthesizer Assembly A2A6 and record.	Rf Millivoltmeter 04901-92B-S5 Electronic Counter 28480-5328A-H99	(a)____Hz (499,999.9 to 500,000.1) (b)____mVrms (50 min) (c)____mVrms (50 min) (d)____ (Check)
	PROCEDURE: Prepare the test setup shown in figure 4-3. On Frequency Standard AN/URQ-23 use the panel meter to verify that the 5 MHz output is approximately one volt. Phase lock the output of the signal generator output for 10 mVrms at 2.000 MHz. Connect rf millivoltmeter 04901-92B-S5 to A2A6A8TP5 and adjust GAIN control on receiver front panel to obtain an indication of 50 mVrms on rf millivoltmeter. Disconnect rf millivoltmeter. Connect electronic counter to A2A6A8TP8. Observe counter indication. Indication should be 499,999.9 Hz to 500,000.1 Hz. Record at (a). Decrease signal generator output exactly 20 dB. Connect rf millivoltmeter to A2A6A8TP8. Indication should be greater than 50 mVrms. Record at (b). Repeat above procedures at each of the frequencies listed below. Verify that output is greater than 50 mVrms at all frequencies. If satisfactory, check at (c). Verify that output frequency is as specified above at all frequencies. If satisfactory, check at (d).		

Table 4-13. Translator/Synthesizer Check (Cont.)

STEP NO.	ACTION REQUIRED	READ INDICATION ON	REFERENCE STANDARD
U3 (Cont.)	FREQUENCY CHART (MHz)		
	3.101	12.1001	21.100
	4.222	13.1002	22.100
	5.333	14.1003	23.100
	6.444	15.1004	24.100
	7.555	16.1005	25.100
	8.666	17.1006	26.100
	9.777	18.1007	27.100
	10.898	19.1008	28.100
	11.989	20.1009	29.100
	Disconnect test equipment. Return 5 MHz OSC SOURCE switch A2A5A2S1 to INT/COMP. Slide receiver chassis assembly into case and secure it.		
	TROUBLESHOOTING: Figures 5-32, 5-38 CORRECTIVE ACTION: Table 6-6.		

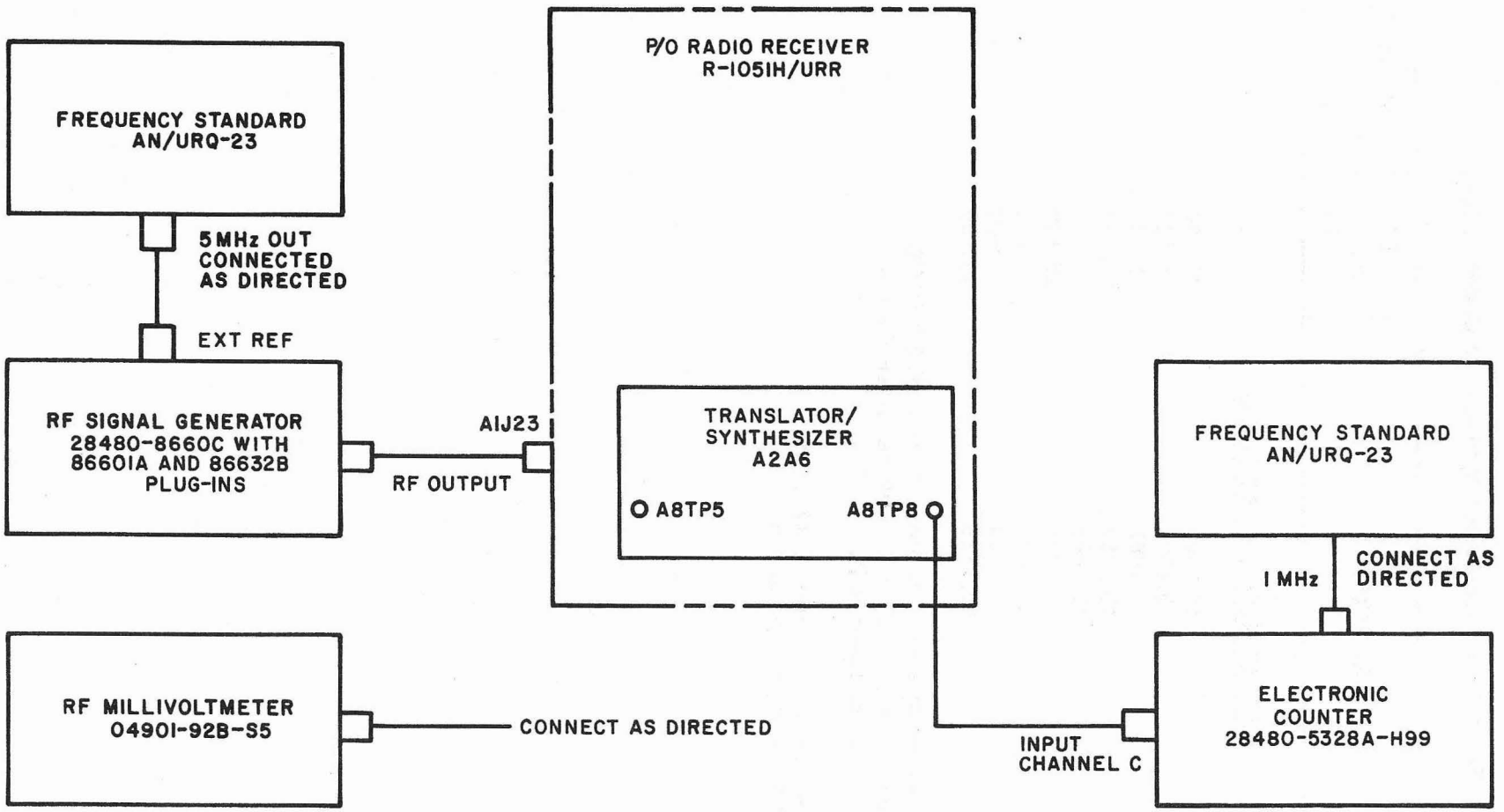

Figure 4-3. Translator/Synthesizer A2A6, Test Setup

Table 4-14. Mode Selector Assembly Check

MINIMUM TECHNICIAN RATING REQUIRED FOR CHECK: ET3
OPERATING CONDITIONS AND CONTROL SETTINGS:
Receiver: Energized, chassis assembly extended from case
Interlock switch A1A2S1: Pulled out
MODE SELECTOR Switch A2A14S2: CW
MGC/AGC switch A2A14S3: OFF
USB LINE LEVEL control A2A14R2: Midrange
LSB LINE LEVEL control A2A14R1: Midrange
Hz switch A2A14A11S1: 000
Frequency controls: 2.010 MHz

STEP NO.	ACTION REQUIRED	READ INDICATION ON	REFERENCE STANDARD
U4	Check and record performance of Mode Selector Assembly A2A1.	Rf Millivoltmeter 04901-92B-S5 Electronic Counter 28480-5328A-H99	(a)____mV (3 to 5) (b)____mV (3 to 5) (c)____mV (3 to 5) (d)____mV (3 to 5) (e)____mV (3 to 5) (f)____mV (3 to 5) (g)____kHz (494.5 to 497) (h)____kHz (503 to 505.5)

PROCEDURE: Connect Rf Signal Generator 28480-8660C with a BNC-to-N adapter and 50-ohm Coaxial Cable RG058C/U to ANT jack A1J23 on rear of receiver. Phase lock the signal generator to 2011 kHz continuous wave with a 100 uV output.

Connect rf millivoltmeter to A2A1A1TP1 on the mode selector. Adjust the signal generator output to obtain 16 mVrms on the rf millivoltmeter. Pull out module A2A2. Connect the rf millivoltmeter to coaxial jack A3 of connector A2XA2P1. Read the rf millivoltmeter and record at (a).

Repeat readings of rf millivoltmeter with MODE SELECTOR Switch A2A14S2 set to AM, USB, ISB, and RATT. Record the readings at (b), (c), (d) and (e) respectively.

Replace module A2A2.

Lock signal generator frequency to 2.009 MHz. Pull out module A2A3. Move rf millivoltmeter to jack A3 of connector A2XA3P1. Set MODE SELECTOR to LSB. Read rf millivoltmeter and record at (f). Replace module A2A3.

Connect electronic counter to test point A2A1A3TP1 on the Mode Selector Assembly A2A1.

Table 4-14. Mode Selector Assembly Check (Cont.)

STEP NO.	ACTION REQUIRED	READ INDICATION ON	REFERENCE STANDARD
U4 (Cont.)	Set MODE SELECTOR Switch A2A14S2 to CW, and GAIN control A2A14R3 fully counterclockwise. Rotate BFO control A2A14R6 fully counterclockwise and observe that the reading on the electronic counter is between 494.5 and 497 kHz. Record counter display at (g). Rotate BFO control A2A14R6 fully clockwise, and observe that the reading on the electronic counter is between 503 and 505.5 kHz. Record counter display at (h). If no further tests are to be performed, disconnect the test equipment, slide receiver chassis into case and secure it; reconnect antenna cable to ANT 50 OHMS jack A1J23. TROUBLESHOOTING: Figures 5-32 and 5-33. CORRECTIVE ACTION: Table 6-2.		

Table 4-15. IF/Audio Amplifier Assemblies Check

MINIMUM TECHNICIAN RATING REQUIRED FOR CHECK: ET3
OPERATING CONDITIONS AND CONTROL SETTINGS:
Receiver: Energized
MODE SELECTOR Switch A2A14S2: USB
AUDIO LEVEL meter switch A2A14A12S1: USB, 20 dBm
MGC/AGC switch A2A14S3: SLOW
Hz switch A2A14A11S1: 000
USB LINE LEVEL control A2A14R2: Midrange
LSB LINE LEVEL control (A2A14R1: Midrange
GAIN control A2A14R3: Fully clockwise
Frequency controls: 2.010 MHz

STEP NO.	ACTION REQUIRED	READ INDICATION ON	REFERENCE STANDARD
U5	Check and record performance of IF/Audio Amplifier Assemblies A2A2 and A2A3.	Ac Voltmeter 28480-400E AUDIO LEVEL meter	(a)____Vac (6.0 to 10.0) (b)____Vac (3.0 to 5.0) (c)____Vac (3.0 to 10.0) (d)____dBm (13 to 17) (e)____Vac (6.0 to 10.0) (f)____Vac (3.0 to 5.0) (g)____dBm (13 to 17)

PROCEDURE: Connect Rf Signal Generator 8660C with 86601A and 86632B plug-ins to ANT 50 OHMS jack A1J23 on rear of receiver using a BNC-to-N adapter and 50 ohm coaxial cable. Phase lock the signal generator at 2.011 MHz, continuous wave, with a 0.5 uV output. Connect ac voltmeter 28480-400E to USB AUDIO OUT jack A1A1J5 on rear of receiver. Set signal generator output level to 500 uVrms.

Rotate USB LINE LEVEL control A2A14R2 fully clockwise (adjust the ac voltmeter range as required). Record ac voltmeter reading at (a).

Insert an adapter comprised of telephone plug PJ-055B and 620-ohm resistor RCR20G621JS into the PHONE USB jack A2A14J2 on the receiver front panel. Connect the ac voltmeter to the terminals of the load. Rotate USB PHONE control A2A14R5 fully clockwise. Record voltmeter reading at (b).

Remove phone plug from PHONE USB jack A2A14J2 and reconnect ac voltmeter to USB AUDIO OUT jack A1A1J5. Set MODE SELECTOR Switch A2A14S2 to AM. Set signal generator for 1000 Hz, 30 percent modulation and phase lock its frequency at 2.010 MHz. Set signal generator output level to 500 uVrms. Record ac voltmeter reading at (c).

Table 4-15. IF/Audio Amplifier Assemblies Check (Cont.)

STEP NO.	ACTION REQUIRED	READ INDICATION ON	REFERENCE STANDARD
U5 (Cont.)	Set ac voltmeter to +20 dB scale. Adjust USB LINE LEVEL control A2A14R2 for +15 dB on ac voltmeter. Observe that AUDIO LEVEL meter indicates +15 ±2 dBm, and record reading at (d). Adjust USB LINE LEVEL control A2A14R2 for 1 Vac on ac voltmeter. Reconnect audio cable to jack A1A1J5 on rear of receiver. Connect ac voltmeter to LSB AUDIO OUT jack A1A1J6 on rear of receiver. Set MODE SELECTOR switch A2A14S2 and AUDIO LEVEL meter switch A2A14A12S1 to LSB, 20 dBm. Set signal generator for continuous wave, at 0.5 uVrms and lock its frequency at 2.009 MHz. Then set signal generator output level to 500 uVrms. Rotate LSB LINE LEVEL control A2A14R1 fully clockwise, adjust the ac voltmeter range as required, and record ac voltmeter reading at (e). Insert phone plug PJ-055B with a 600 ohm load into the PHONE LSB jack A2A14J1 on the receiver front panel. Connect the ac voltmeter to the terminals of the load. Rotate LSB PHONE control A2A14R4 fully clockwise. Record ac voltmeter reading at (f). Remove phone plug from PHONE LSB jack A2A14J1 and reconnect ac voltmeter to LSB AUDIO OUT jack A1A1J6. Set ac voltmeter to +20 dB scale. Adjust LSB LINE LEVEL control A2A14R1 for +15 dBm on ac voltmeter. Observe that AUDIO LEVEL meter indicates +15 ±2 dBm, and record reading at (g). Adjust LSB LINE LEVEL control A2A14R1 for 1 Vac on ac voltmeter. If no further tests are to be performed, disconnect all test equipment, reconnect audio cable to jack A1A1J6, and reconnect antenna cable to ANT 50 OHMS jack A1J23. TROUBLESHOOTING: Figures 5-23 and 5-24. CORRECTIVE ACTION: Table 6-3.		

Table 4-16. Frequency Standard Tests

MINIMUM TECHNICIAN RATING REQUIRED FOR CHECK: ET3
OPERATING CONDITIONS AND CONTROL SETTINGS:
Receiver: Energized, with chassis assembly extended from case
Interlock switch A1A2S1: Pulled out
MODE SELECTOR Switch A2A14S2: ISB
5 MHz OSC SOURCE switch A2A5A2S1: INT/COMP

STEP NO.	ACTION REQUIRED	READ INDICATION ON	REFERENCE STANDARD
U6	Measure and record 5 MHz, 10 MHz, and 500 kHz outputs of Frequency Standard Assembly A2A5.	Rf Millivoltmeter 04901-92B-S5 Electronic Counter 28480-5328A-H99	(a)____mV (480 to 720) (b)____mV (20 to 40) (c)____Hz (499,999.95 to 500,000.05) (d)____mV (150 to 200)

NOTE

For this test Frequency Standard Assembly A2A5 must be temperature stabilized by allowing the receiver to operate in any receiver mode with 5 MHz OSC SOURCE switch A2A5A2S1 in EXT (OVEN STBY) position for at least 96 hours.

PROCEDURE: Connect 50 ohm load across INT 5 MHZ OUT jack A1J24 on rear of receiver. Place 5 MHz OSC SOURCE switch A2A5A2S1 in INT/COMP position.

Measure 5 MHz output with rf millivoltmeter 04901-92B-S5 at A1J24. Record meter indication at (a). Remove 50 ohm load.

Remove Translator/Synthesizer Assembly A2A6 from receiver. Connect a 50 ohm load across A2XA6P1A1. Measure amplitude of 10 MHz signal at A2XA6P1A1 with rf millivoltmeter 04901-92B-S5. Record meter indication at (b). Remove 50 ohm load.

Connect a 100 ohm load across A2XA6P1A3. Measure the frequency of the 500 kHz signal at A2XA6P1A3 with the electronic counter. Record indication at (c).

Table 4-16. Frequency Standard Tests (Cont.)

STEP NO.	ACTION REQUIRED	READ INDICATION ON	REFERENCE STANDARD
U6 (Cont.)	Measure amplitude of 500 kHz signal at A2XA6P1A3 with rf millivoltmeter 04901-92B-S5. Record meter indication at (d). Return 5 MHz OSC SOURCE switch A2A5A2S1 to normal operating mode (usually EXT NORMAL), remove all loads, and reinstall Translator/Synthesizer Assembly A2A6 in receiver. Return chassis assembly to case and secure. TROUBLESHOOTING: Figure 5-27. CORRECTIVE ACTION: Table 6-5.		

CHAPTER 5

TROUBLESHOOTING

5-1. INTRODUCTION.

5-2. GENERAL. This chapter contains data, procedures and diagrams to aid the maintenance technician in identifying malfunctions, localizing troubles to the malfunctioning assembly or subassembly, and isolating faults to a stage or circuit within that assembly. A procedure is provided which gives instructions for receiver turn-on, initial checks, control settings, and test setups. From this procedure, overall equipment operability can be ascertained and inoperative functions can be identified. Signal flow diagrams provided for each equipment function, together with an overall receiver troubleshooting index, serve to localize trouble to the malfunctioning assembly or subassembly. Fault logic diagrams help to identify faulty circuits. Schematic diagrams are provided for independently troubleshooting the suspect assemblies, subassemblies, and circuits.

5-3. TROUBLESHOOTING DATA. Troubleshooting data consists of signal flow diagrams, fault logic diagrams, control diagrams, and maintenance schematic diagrams. By checking the results obtained during the maintenance turn-on procedure against the performance data in the OBSERVE column of table 5-5 the technician can determine which major function or supporting function is not operating properly. Table 5-5 also references the applicable troubleshooting diagram for analysis and correction of malfunctions. Fault logic diagrams used in conjunction with signal flow diagrams enable the depot troubleshooter to identify the detail part within an assembly to be replaced.

5-4. REPAIR FUNCTIONS. Organization level repair functions consist of troubleshooting and repairing Case A1, Chassis/Front Panel Assemblies A2/A2A14 and all assemblies A2A9, A2A10, A2A13, A2A14A11, and A2A14A12 attached thereto, and replacement of Code Generator Assembly A2A7. Depot level repair functions consist of troubleshooting, repairing, and alining plug-in assemblies A2A1 through A2A6 of Chassis Assembly A2.

5-5. ALINEMENT AND CHECKOUT. When any organizational repairs have been made, such repairs shall be followed by performance of the overall receiver alinement of table 6-1 and the performance tests of Chapter 4. Any repairs to plug-in assemblies at depot shall be followed by performance of alinements listed in the applicable table of Chapter 6.

5-6. TROUBLESHOOTING INDEX.

5-7. Table 5-1 lists the receiver functional areas in alphabetical order, and cross reference the appropriate paragraphs and illustrations to be used in trouble analysis of each faulty function.

5-8. RELAY AND INDICATOR LAMP INDEXES.

5-9. Table 5-2 provides the maintenance technician with the reference designation, functional name, energizing voltage, and a reference to the troubleshooting diagram for each relay in R-1051H/URR. Table 5-3 provides equivalent information for indicator lamps in the receiver.

5-10. PROTECTIVE DEVICES INDEX.

5-11. Fuses and interlock switch of R-1051H/URR are listed in table 5-4. The electrical rating, circuit protected, and reference to the troubleshooting diagram are provided for each device.

5-12. MAINTENANCE TURN-ON PROCEDURE.

5-13. The receiver maintenance turn-on procedure given in table 5-5 is to be performed in the sequence shown. The receiver is taken through the necessary steps from

fully deenergized to fully operational. Observations to be made at each step are described and troubleshooting information relating to failures is referenced. Before starting the procedure of table 5-5, apply primary power to the test equipment listed below, and allow a 30-minute warm-up period.

Frequency Standard AN/URQ-23
AC Voltmeter 28480-400E
Oscilloscope 80009-465M
Multimeter 55026-260-6XLP
Electronic Counter 28480-5328A-H99
Rf Signal Generator 28480-8660C
with 86601A and 86632B Plug-ins
Rf Millivoltmeter 04901-92B-5S with
Probe Tip 04901-91-13B
Digitial Multimeter 89536-8800A/AA

5-14. TROUBLESHOOTING PROCEDURES.

5-15. By careful observation during the maintenance turn-on procedure, trouble can be traced to a major function or secondary function. The diagrams referenced in table 5-5 can be used to localize the fault to a component part.

5-16. TROUBLESHOOTING DIAGRAMS.

5-17. GENERAL. The troubleshooting diagrams included in this chapter consist of signal flow diagrams, power distribution diagrams, a control diagram, fault logic diagrams, and maintenance schematic diagrams. The diagrams aid the technician in troubleshooting by providing a logical sequence of fault isolation of a failure to a specific component.

5-18. SIGNAL FLOW DIAGRAMS. Signal flow diagrams, figures 5-1 through 5-13, provided for each major equipment function, are the main troubleshooting tool. These diagrams show signal paths, connectors, test points, terminals, adjustments, indicators, and circuit stages - all the information necessary to isolate a malfunctioning circuit quickly. Included with each signal flow diagram are the test data required to obtain the measurements to be made at various points on the diagram. The data include test equipment required, reference to other areas of the manual which may furnish additional information, preliminary setup instructions,

(Text continued on page 5-23)

Table 5-1. Radio Receiver R-1051H/URR, Troubleshooting Index

FUNCTIONAL AREA	TROUBLE-SHOOTING DIAGRAM	FUNCTIONAL DESCRIPTION PARAGRAPH	ALINEMENT/ ADJUSTMENT TABLE/PARAGRAPH
AC Power Distribution	5-14	3-100	Para. 8-19
Audio Amplification (LSB)	5-6, 5-24	3-63	T 6-3
Audio Amplification (USB)	5-5, 5-23	3-63	T 6-3
Automatic Gain Control	5-7, 5-25	3-60	T 6-3
Beat Frequency Oscillator	5-8, 5-26	3-58	T 6-2
Tuning Control	5-19	3-109	T 6-1
500 kHz Gating	5-4	3-57	-
Frequency Standard	5-9, 5-27, 5-36	3-71	T 6-1, T 6-5
Frequency Synthesis and Translation	3-26, 5-28 through 5-31, 5-37 through 5-44	3-81	T 6-6
IF Amplification and Control	5-22	3-51	T 6-2, T 6-3
10 kHz, 1 kHz and Hz Synthesis	5-11, 5-29	3-88	T 6-6
100 kHz Synthesis	5-12, 5-30	3-92	T 6-6
+110 V Distribution	5-17	3-105	-
RF Selection, Tuning, and Overload Protection	5-1, 5-20	3-22	-

Table 5-1. Radio Receiver R-1051H/URR, Troubleshooting Index (Cont.)

FUNCTIONAL AREA	TROUBLE-SHOOTING DIAGRAM	FUNCTIONAL DESCRIPTION PARAGRAPH	ALINEMENT/ ADJUSTMENT TABLE/PARAGRAPH
Rf-to-IF Conversion	5-2, 5-21	3-31	T 6-6
10 MHz and 1 MHz Synthesis	5-13, 5-31	3-96	T 6-6
-30 V Distribution	5-18	3-106	-
+20 V and +5 V Distribution	5-16	3-103	T 6-1, T 6-7
+28 V Distribution	5-15	3-102	-

Table 5-2. Relay Index

REFERENCE DESIGNATION	FUNCTIONAL NAME	ENERGIZING VOLTAGE	TROUBLESHOOTING DIAGRAM (FIG. NO.)
A2A13K1	Transmit/Receive Relay	+28 V	5-32
A2A13K2	Hi/Lo Filter Relay	+28 V	5-32
A2A4K1	Turret Tuning Relay	+28 V	5-35
A2A4A38K1	Transmit/Receive Relay	+28 V	5-35
A2A9K1	Antenna Overload Relay	+28 V	5-32

Table 5-3. Indicator Lamp Index

REFERENCE DESIGNATION	FUNCTIONAL NAME	ENERGIZING VOLTAGE	TROUBLESHOOTING DIAGRAM (FIG. NO.)
A2A14DS3	Dial Lamps for MHz Indicators	+28 V	5-32
A2A14DS4	Dial Lamps for kHz Indicators	+28 V	5-32
A2A14DS5	Hz Vernier Indicator	140 V drop (+110 V and -30 V)	5-32
A2A5A2DS1	Frequency Standard Visual Comparator Lamp	+20 V	5-36

Table 5-4. Protective Devices Index

REFERENCE DESIGNATION	FUNCTIONAL NAME	RATING		CIRCUIT PROTECTED	TROUBLE-SHOOTING DIAGRAM (FIG. NO.)
		VOLTS	AMPERES		
A1A2S1	(Interlock switch)	125	15.0	Primary Power	5-32
A2A14F1	F1 3/4 A	125	0.75	Primary Power	5-32
A2A14F2	F2 3/4 A	125	0.75	Primary Power	5-32

Table 5-5. Radio Receiver R-1051H/URR, Maintenance Turn-on Procedure

STEP	OBSERVE	REFERENCE
1. Preliminary Procedure:		
	NOTE Perform the preliminary procedure before applying power to the R-1051H/URR.	
a. Loosen front panel screws and slide chassis out fully on slides.	Note and record setting of 5 MHz OSC SOURCE switch A2A5A1S1 on Frequency Standard Assembly A2A5.	
b. Position front panel as indicated. Switch / Position MODE SELECTOR A2A14S2 / OFF MGC/AGC A2A14S3 / OFF 10 MHz control / 0 1 MHz control / 2	MODE SELECTOR Switch A2A14S2 must be pulled out to turn to OFF. Digits 0 and 2 viewed at 10 and 1 MHz windows on front panel.	
c. Disconnect an external 5 MHz input if connected from EXT 5 MHz IN connector A1J25, and set 5 MHz OSC SOURCE switch A2A5A2S1 on Frequency Standard Assembly A2A5 to INT/COMP.		
d. Momentarily remove fuses A2A14F1 and A2A14F2 and check for proper value. Reinsert fuses.	A2A14F1 and A2A14F2 are 3/4 ampere slo-blo fuses.	Schematic, figure 5-32, zones 21F, 20F, respectively
e. Visually check for any positive indications of electrical or mechanical failures. Ensure that all assemblies are properly mated to the Chassis/Front Panel Assemblies A2/A2A14.	No visual indication of electrical or mechanical failure, and assemblies are properly mated to the chassis.	

Table 5-5. Radio Receiver R-1051H/URR, Maintenance Turn-on Procedure (Cont.)

STEP	OBSERVE	REFERENCE
1. Preliminary Procedure (Cont.)		
f. At the top right corner of the case, defeat Interlock Switch A1A2S1 by gripping plunger and pulling forward.	Plunger extends forward of case. Operation of the interlock switch is noted by an audible click.	
CAUTION Hand guide chassis assembly cable at rear of chassis over edge of case when rotating chassis assembly to vertical position.		
g. Tilt the receiver chassis 90 degrees to expose bottom.		
WARNING Dangerous voltages are present in chassis when primary power is applied. Observe all safety precautions.		
2. Overall Ac and Dc Voltage Application.		
a. At rear of the case, apply 115 Vac at pins A and C of AC PWR IN jack A1A1J3.		
b. On front panel, remove fuses A2A14F1 and A2A14F2 and replace the fuse caps.		
c. Turn MODE SELECTOR Switch A2A14S2 from OFF to STDBY.	Fuse indicators for A2A14F1 and A2A14F2 illuminate.	Schematic, figure 5-32, zones 19E, F.
d. Pull MODE SELECTOR Switch A2A14S2 out, and turn from STDBY to OFF. Reinstall fuses A2A14F1 and A2A14F2 and replace indicator caps.		

Table 5-5. Radio Receiver R-1051H/URR, Maintenance Turn-on Procedure (Cont.)

STEP	OBSERVE	REFERENCE
2. Overall Ac and Dc Voltage Application (Cont.)		
e. Set MODE SELECTOR Switch A2A14S2 to STDBY.	Fuse indicators for A2A14F1 and A2A14F2 do not illuminate. MHz and kHz dial lights A2A14DS3 and A2A14DS4 illuminate, indicating that 115 Vac is now applied to Control Assembly A2A13 via power transformer A2T1, and +28 V is available at the output of the power supply. Filaments of tubes A2A4V1 and V2 in RF Amplifier Assembly A2A4 illuminate.	Schematic, figure 5-32, zones 19E, F; 11F, E, respectively.
f. On Front Panel Assembly A2A14, locate tie point A2A14E8. On bottom of receiver chassis, in lower left-hand corner and to right of power supply printed circuit board A2A13, locate tie points A2E11, A2E12 and A2E43.		
CAUTION Regulated +20 V is provided by chassis assembly regulator A2U1 and applied to the proper receiver assemblies when the MODE SELECTOR Switch A2A14S2 is set to any position other than OFF or STDBY. If the +20 V regulator or A2CR10 is shorted, the +20 V line will carry +28 V, which will drastically reduce the life span of all assemblies using the regulated +20 V. One or more assemblies may fail immediately.		
g. Connect multimeter 55026-260-6XLP to A2E11, set MODE SELECTOR Switch A2A14S2 to LSB, and observe multimeter.	Approximately +20 V. If multimeter indicates approximately +28 V or 0 V, immediately turn MODE SELECTOR Switch A2A14S2 to OFF and troubleshoot the +28V associated parts of Control Assembly A2A13 and Chassis Assembly A2.	Schematic, figure 5-32, zone 13A.

Table 5-5. Radio Receiver R-1051H/URR, Maintenance Turn-on Procedure (Cont.)

STEP	OBSERVE	REFERENCE
2. Overall Ac and Dc Voltage Application (Cont.)		
h. Set MODE SELECTOR Switch A2A14S2 to ISB.		
i. Using multimeter on appropriate dc scale, measure voltage between the following tie points and ground:		
Tie Point / Nominal Voltage		
A2A14E8 -30 V	-28.5 to -31.5 V	Schematic, figure 5-32, zones 11E, 12G, 12J, respectively.
A2E12 +28 V	+24 to +32 V	
A2E17 +110 V	+103 to +123 V	
	If any voltage is not within tolerance, set MODE SELECTOR Switch A2A14S2 to OFF and troubleshoot CONTROL Assembly A2A13 and related power production components of Chassis Assembly A2. If all voltages are out of tolerance, check ac line voltage and setting of power transformer A2T1 primary winding tap.	
j. Adjust Digital Multimeter 89536-8800A/AA to measure +20 V with respect to ground and connect to A2E11.	+19 to +21 V.	Schematic, figure 5-32, zone 12D.
k. Using AC Voltmeter 28480-400E with a 1:1 probe, measure ac ripple at the following points:		
Tie Point / Nominal Voltage		Schematic, figure 5-32, zones 12J, 12G, 12D, 11E, respectively.
A2E43 +110 V	90 mVrms maximum	
A2E12 +28 V	320 mVrms maximum	
A2E11 +20 V	2 mVrms maximum	
A2A14E8 -30 V	15 mVrms maximum	

Table 5-5. Radio Receiver R-1051H/URR, Maintenance Turn-on Procedure (Cont.)

STEP	OBSERVE	REFERENCE
2. Overall Ac and Dc Voltage Application (Cont.)		
l. Rotate chassis to horizontal position and check for presence of +28 V at RF Amplifier Assembly A2A4, by rotating MHz controls on receiver front panel between 02 and 29, while viewing rf amplifier digit window.	Rf amplifier tuning motor drives as MHz controls are rotated.	Schematic, figure 5-32, zone 37H and figure 5-35
m. Rotate the front panel MHz controls for 02 through 29, and compare the digits viewed through the digit window on top of RF Amplifier Assembly A2A4 with those viewed at front panel MHz windows.	The digits viewed in the rf amplifier window should be centered in the window and agree with the digits viewed through the front panel windows.	
n. Set front panel Hz switch A2A14A11S1 to V, and view the vernier indicator A2A14DS5.	Lamp flashes in vernier indicator A2A14DS5.	Schematic, figure 5-32, zone 70F
3. Frequency Standard Check		
CAUTION Do not check Frequency Standard Assembly A2A5 unless power has been applied for at least 96 hours under the following conditions: 1. MODE SELECTOR Switch A2A14S2 in a position other than OFF. 2. 5 MHz OSC SOUCE switch A2A5A2S1 in a position other than EXT NORMAL. Most drift will occur during the first 60 minutes of warm-up; thereafter the error should be less than ±1 part per 10^7 (±0.5 Hz at 5 MHz).		

Table 5-5. Radio Receiver R-1051H/URR, Maintenance Turn-on Procedure (Cont.)

STEP	OBSERVE	REFERENCE
3. Frequency Standard Check (Cont.)		
a. Connect the AN/URQ-23( ) 1 MHz output to the Electronic Counter 28480-5328A-H99 External Frequency Standard input jack. Disconnect the external 5 MHz input from EXT 5 MHZ IN connector A1J25, if connected, and set 5 MHz OSC SOUCE switch A2A5A2S1 on Frequency Standard Assembly A2A5 to INT/COMP. Connect 50 ohm load to INT 5 MHz OUT jack A1J24 at rear of case.		
b. Connect Electronic Counter 28480-5328A-H99 to A1J24. Measure frequency.	5 MHz ±0.5 Hz	Fault Logic Diagram, figure 5-27, Schematic, figure 5-36
c. Remove Mode Selector Assembly A2A1 from chassis. Connect Electronic Counter 28480-5328A-H99 to A2XA1P2A2. Measure frequency.	500 kHz ±0.1 Hz	Schematic, figure 5-36
d. Connect Rf Millivoltmeter 04901-92B-S5 to INT 5 MHz OUT jack A1J24 and measure voltage.	480 to 720 mVrms	Schematics, figure 5-32, and 5-36
e. Remove cover from Mode Selector Assembly A2A1, and connect A2A1 to chassis by means of an extender cable. Connect Rf Millivoltmeter between A2A1-A2E6 and A2A1A2E7 (ground). Measure voltage.	100 to 200 mVrms	Fault Logic Diagram, figure 5-27, Schematic, figure 5-36
NOTE Steps f., g., and h. are to be performed at installations where R-1051H/URR is normally operated with external 5 MHZ input at EXT 5 MHz IN connector A1J25.		

Table 5-5. Radio Receiver R-1051H/URR, Maintenance Turn-on Procedure (Cont.)

STEP	OBSERVE	REFERENCE
3. Frequency Standard Check (Cont.)		
f. Maintain conditions of step e., above. Place 5 MHz OSC SOUCE switch A2A5A2S1 in EXT (OVEN STBY) position and connect external 5 MHz souce to A1J25. Observe Rf Millivoltmeter.	100 to 200 mVrms.	Schematic, figure 5-36
g. Disconnect external 5 MHz source from A1J25. Observe Rf millivoltmeter.	100 to 200 mVrms.	Schematic, figure 5-36
h. Disconnect test equipment. Reattach cover to Mode Selector Assembly A2A1, remove extender cable, and reinstall A2A1 in chassis. Fasten in place. Remove 50 ohm load from A1J24. Restore external 5 MHz source and 5 MHz OSC SOURCE switch A2A5A2S1 to usual operating condition.		
4. Rf Amplifier Signal Flow Check		
a. Position receiver front panel controls as follows:		
Control — Position		
MODE SELECTOR A2A14S2 — USB		
GAIN A2A14R3 — Fully clockwise		
Hz A2A14A11S1 — 000		
MGC/AGC A2A14S3 — OFF		
USB LINE LEVEL A2A14R2 — Midrange		
AUDIO LEVEL switch A2A14A12S1 — OFF		

Table 5-5. Radio Receiver R-1051H/URR, Maintenance Turn-on Procedure (Cont.)

STEP	OBSERVE	REFERENCE
4. Rf Amplifier Signal Flow Check (Cont.)		
b. Connect Rf Signal Generator 28480-8660C to the receiver ANT jack A1J23. Set generator for a 1000 uV continuous wave signal, at 2.011 MHz.		
c. On RF Amplifier Assembly A2A4, connect Rf Millivoltmeter 04901-92B-S5 to A2A4TP3. Ensure that probe is connected to measure at A2A4TP3, not ground test point located next to it.	Connect millivoltmeter probe ground to A2A4TP4.	
d. On the receiver front panel, set the MHz and kHz controls for 2.010 MHz.		
e. Tune the signal generator (2.011 MHz) maximum indication of rf millivoltmeter. Note dBm reading for use in next step.	20 to 40 mV. figure 5-35	Fault Logic Diagram, figure 5-20, Schematic, figure 5-35
f. Remove rf millivoltmeter from A2A4TP3 and connect to A2A6A8TP5 on RF Translator Subassembly A2A6A8. Note dBm reading.	Reading to be not more than 6 dB lower than the measurement made in step 4.e. If difference is more 6 dB, troubleshoot signal path between RF Amplifier Assembly A2A4 and RF Translator Subassembly A2A6A8.	Schematic, figure 5-38
g. Reconnect rf millivoltmeter to A2A4TP3.		
h. Set the rf signal generator and the receiver MHz and kHz controls to the following positions, tuning the rf signal generator for a maximum indication on the rf millivoltmeter:	20 to 40 mV for each frequency selected.	Schematic, figure 5-35

Table 5-5. Radio Receiver R-1051H/URR, Maintenance Turn-on Procedure (Cont.)

STEP	OBSERVE	REFERENCE
4. Rf Amplifier Signal Flow Check (Cont.) Signal Generator MHz / Receiver MHz 3.102 / 3.101 4.223 / 4.222 5.334 / 5.333 6.445 / 6.444 7.556 / 7.555 8.667 / 8.666 9.778 / 9.777 10.899 / 10.898 11.990 / 11.989 12.011 / 12.010 13.011 / 13.010 14.011 / 14.010 15.011 / 15.010 16.011 / 16.010 17.011 / 17.010 18.011 / 18.010 19.011 / 19.010 20.011 / 10.010 21.011 / 21.010 22.011 / 22.010 23.011 / 23.010 24.011 / 24.010 25.011 / 25.010 26.011 / 26.010 27.011 / 27.010 28.011 / 28.010 29.011 / 29.010 5. Translator/Synthesizer rf to IF Signal Flow Check a. Maintain receiver front panel control settings, except set MHz and kHz controls for 2.010 MHz and MGC/AGC control A2A14S3 to SLOW. b. Connect Rf Millivoltmeter 04901-92B-S5 to A2A6A8TP8 on RF Translator Subassembly A2A6A8.		

Table 5-5. Radio Receiver R-1051H/URR, Maintenance Turn-on Procedure (Cont.)

STEP	OBSERVE	REFERENCE
5. Translator/Synthesizer rf to IF Signal Flow Check (Cont.)		
c. Tune Rf Signal Generator 28480-8660C to 2.011 MHz (1000 uVrms output) and note Rf Millivoltmeter indication.	Greater than 0.7 mVrms.	Troubleshooting Procedures, Figures 5-2, 5-21
d. Repeat steps a. and c. above with signal generator and receiver MHz and kHz controls set at the following frequencies:	Greater than 7.0 mVrms for each frequency selected.	Troubleshooting Procedures, Figures 5-2, 5-21

Signal Generator MHz	Receiver MHz
3.102	3.101
4.223	4.222
5.334	5.333
6.445	6.444
7.556	7.555
8.667	8.666
9.778	9.777
10.899	10.898
11.990	11.989
12.556	12.555
13.556	13.555
14.556	14.555
15.556	15.555
16.556	16.555
17.556	17.555
18.556	18.555
19.556	19.555
20.556	20.555
21.556	21.555
22.556	22.555
23.556	23.555
24.556	24.555
25.556	25.555
26.556	26.555
27.556	27.555
28.556	28.555
29.556	29.555

Table 5-5. Radio Receiver R-1051H/URR, Maintenance Turn-on Procedure (Cont.)

STEP	OBSERVE	REFERENCE
6. IF Signal Flow Check		
a. Maintain same test setup as for step 5, except set mode selector switch to STDBY and remove IF Audio Amplifier Assemblies A2A2 and A2A3 from chassis assembly. Set MODE SELECTOR switch to USB.		
b. Set receiver MHz and kHz controls to 2.010 MHz.		
c. Set rf signal generator for 2.011 MHz continuous wave.		
d. Connect rf millivoltmeter to terminal A3 of jack A2XA2P1, and adjust output level of signal generator to obtain 4 mV rms signal.		
e. Connect rf millivoltmeter to A1TP1 on Mode Selector Assembly A2A1, and observe meter indication. Then position the MODE SELECTOR Switch A2A14S2, in turn, to RATT and ISB.	150 to 180 mVrms at USB, RATT, and ISB positions.	Fault Logic Diagram, figure 5-22; Schematic, figure 5-32; Schematic, figure 5-33
f. Set MODE SELECTOR Switch A2A14S2 to AM. Connect rf millivoltmeter to terminal A3 of jack A2XA2P1, and adjust output level of signal generator to obtain a 4 mVrms signal.		
g. Connect rf millivoltmeter to A1TP1 on Mode Selector Assembly A2A1 and observe meter indication with MODE SELECTOR Switch A2A14S2 in AM, then CW.	150 to 180 mVrms at AM and CW positions.	Fault Logic Diagram, figure 5-22; Schematic figure 5-32; Schematic figure 5-33

Table 5-5. Radio Receiver R-1051H/URR, Maintenance Turn-on Procedure (Cont.)

STEP	OBSERVE	REFERENCE
6. IF Signal Flow Check (Cont.) h. Set MODE SELECTOR Switch A2A14S2 to LSB. Connect rf millivoltmeter to terminal A3 of jack A2XA3P1, and adjust output level of signal generator to obtain a 4 mVrms signal. i. Connect the rf millivoltmeter to A1TP1 on Mode Selector Assembly A2A1 and observe meter indication with MODE SELECTOR Switch A2A14S2 in LSB, then ISB. j. Set MODE SELECTOR Switch A2A14S2 to STDBY and reinstall both IF Audio Amplifier Assemblies A2A2 and A2A3. k. Disconnect test equipment. 7. IF-to-Audio Signal Flow Check a. Position receiver controls as follows: Control — Position MODE SELECTOR A2A14S2 — USB MHz and kHz controls — 02.010 MHz Hz A2A14A11S1 — 000 GAIN A2A14R3 — Fully clockwise MGC/AGC A2A14S3 — SLOW AUDIO LEVEL — OFF USB LINE LEVEL control A2A14R2 — Midrange LSB LINE LEVEL control A2A14R1 — Midrange	150 to 180 mVrms at LSB and ISB positions.	Fault Logic Diagram, figure 5-22; Schematic, figures 5-32 and 5-33

Table 5-5. Radio Receiver R-1051H/URR, Maintenance Turn-on Procedure (Cont.)

STEP	OBSERVE	REFERENCE
7. IF-to-Audio Signal Flow Check (Cont.)		
b. Set Rf Signal Generator 28480-8660C for 2.011 MHz continuous wave. Connect to ANT jack A1J23, at rear of receiver.		
c. Connect Ac Voltmeter 28480-400E to USB AUDIO OUT jack A1A1J5 at rear of receiver, and set to measure 10 Vac.		
d. Set the rf signal generator frequency for peak indication on ac voltmeter with 1 uVrms signal level from rf signal generator; then set the rf signal generator level to 1 mVrms. Rotate USB LINE LEVEL control A2A14R2 fully clockwise, and note ac voltmeter indication.	6 to 10 Vac	Fault Logic Diagram, figure 5-23; Schematic, figure 5-34
e. Set MODE SELECTOR Switch A2A14S2 to AM.		
f. Adjust the rf signal generator for 1000 Hz, 30 percent modulation. Tune for peak indication on ac voltmeter with a 1 uVrms signal level on rf signal generator; then set the rf signal generator level to 1 mVrms. Note ac voltmeter indication.	6 to 10 Vac	Fault Logic Diagram, figure 5-23; Schematic, figure 5-34
g. Remove ac voltmeter from receiver jack A1A1J5 and connect to LSB AUDIO OUT jack A1A1J6.		
h. Adjust the rf signal generator for 2.009 MHz, continuous wave, at 1 uV rms.		

Table 5-5. Radio Receiver R-1051H/URR, Maintenance Turn-on Procedure (Cont.)

STEP	OBSERVE	REFERENCE
7. IF-to-Audio Signal Flow Check (Cont.)		
i. Set MODE SELECTOR Switch A2A14S2 to LSB, and rotate LSB LINE LEVEL A2A14R1 control fully clockwise.		
j. Adjust rf signal generator for peak inidication on ac voltmeter; then set rf signal generator level to 1 mVrms. Note ac voltmeter indication.	6 to 10 Vac	Fault Logic Diagram, figure 5-24; Schematic, figure 5-34
k. Disconnect external test equipment. Maintain all other conditions.		
8. Overall Operational Procedure.		
a. Position receiver controls as follows:		
Control — Position		
MODE SELECTOR A2A14S2 — USB		
MHz and kHz controls — 04.999 MHz		
Hz A2A14A11S1 — 000		
GAIN A2A14R3 — Fully Clockwise		
PHONE USB and LSB VOL CONTROLS A2A14R5 and A2A14R4 — Fully Clockwise		
USB and LSB LINE LEVEL CONTROLS A2A14R2 and A2A14R1 — Fully Clockwise		
AUDIO LEVEL switch A2A14A12S1 — USB +20 dB		
MGC/AGC A2A14S3 — SLOW		
b. Connect INT 5 MHz OUT jack A1J24 to ANT jack A1J23.		

Table 5-5. Radio Receiver R-1051H/URR, Maintenance Turn-on Procedure (Cont.)

STEP	OBSERVE		REFERENCE
8. Overall Operational Procedure (Cont.)			
c. Connect Electronic Counter 28480-5328A-H99 or equivalent to PHONE USB jack A2A14J2 on the receiver front panel. Ensure that 5 MHz OSC SOURCE switch A2A5A2S1 on Frequency Standard Assembly A2A5 is set to INT/COMP.			
d. Adjust the USB LINE LEVEL control A2A14R2 for an indication of +10 dBm on AUDIO LEVEL meter A2A14M1, and note the electronic counter indication.	1000 Hz		Fault Logic Diagram, figure 5-27
e. Change receiver frequency, in turn, to 4.998 and 4.997 MHz; note electronic counter indication for each selected frequency.	Receiver Frequency Selected (MHz) 4.998 4.997	Electronic Counter Indication (Hz) 2000 3000	Fault Logic Diagram, figure 5-27
f. Change receiver frequency to 5.000 MHz. Set MODE SELECTOR Switch A2A14S2 to CW. Ensure Hz switch A2A14A11S1 is at 000 position.			
g. Rotate BFO control A2A14R6 fully counterclockwise, and adjust the USB PHONE and LINE LEVEL controls A2A14R5 and A2A14R2 for a stable indication on the electronic counter.	3 kHz (minimum).		Fault Logic Diagram, figure 5-26
h. Rotate BFO control A2A14R6 fully clockwise, and observe electronic counter.	3 kHz (minimum).		Fault Logic Diagram, figure 5-26

Table 5-5. Radio Receiver R-1051H/URR, Maintenance Turn-on Procedure (Cont.)

STEP	OBSERVE	REFERENCE
8. Overall Operational Procedure (Cont.)		
i. Set MODE SELECTOR and AUDIO LEVEL Switch A2A14S2 and A2A14A12S1 to LSB, and LSB to +20 dBm.		
j. Connect electronic counter to PHONE LSB jack A2A14J1.		
k. Set receiver frequency to 5.001 MHz, and adjust the LSB LINE LEVEL control A2A14R1 for +10 dBm indication on the AUDIO LEVEL meter A2A14M1, and observe electronic counter.	1000 Hz.	Fault Logic Diagram, figure 5-27
l. Rotate the Hz switch A2A14A11S1 from 000 through 900, and then return to 000 position, while observing electronic counter.	1100 Hz through 1900 Hz in 100-Hz increments.	Schematic Diagram, figure 5-32, zone 71C
m. Change the receiver frequency, in turn, to 5.002 and 5.003 MHz; note electronic counter indication for each selected frequency; and then return frequency to 5.002 MHz.	Receiver Frequency Selected (MHz): 5.002, 5.003 — Electronic Counter Indication (Hz): 2000, 3000	Fault Logic Diagram, figure 5-27
n. Set Hz switch A2A14A11S1 to V (vernier position) and rotate Hz vernier control A2A14A11R1 from fully counterclockwise to fully clockwise position, while observing electronic counter. Return Hz switch A2A14A11S1 to 000.	1000 Hz or less in fully counterclockwise position, and 2000 Hz or more in fully clockwise position.	Schematic Diagram, figure 5-32, zone 71C
9. Turn-off Procedure.		
a. On Frequency Standard Assembly A2A5, set 5 MHz OSC SOURCE switch A2A5A2S1 to the position noted in Step 1.a.		

Table 5-5. Radio Receiver R-1051H/URR, Maintenance Turn-on Procedure (Cont.)

STEP	OBSERVE	REFERENCE
9. Turn-off Procedure (Cont.) b. Remove all test equipment and test cable between A1J23 and A1J24 on rear of receiver cabinet. c. Pull MODE SELECTOR Switch A2A14S2 out, and set to OFF. d. Slide receiver chassis into case. Secure with front panel screws.		

and step-by-step procedures for obtaining the indication shown at each of the test points specified on the signal flow diagram. The following general notes should be observed when performing any of the tests for the signal flow diagrams.

a. Signal levels and frequencies measured in an assembly connected on an extender cable may differ from the same measurements made when the module is plugged into the chassis assembly without the extender cable.

b. Be certain that the rf signal generator and the electronic counter are connected to Frequency Standard AN/URQ-23 whenever they are used for testing, to ensure accuracy of all frequency measurements.

5-19. POWER DISTRIBUTION DIAGRAMS. The power distribution diagrams (Figures 5-14 through 5-18) aid in troubleshooting the circuits involved in primary power, +28 V, +20 V, +5 V, +110 V, and -30 V distribution in the R-1051H/URR. These diagrams depict the distribution of each voltage from the source through control circuits to the final assemblies or subassemblies which use it.

5-20. CONTROL DIAGRAM. The tuning control diagram (Figure 5-19) shows all circuits involved in the tuning of the receiver to the desired frequency. The signal flow is shown from the front panel frequency controls to the assemblies and subassemblies that tune the receiver.

5-21. FAULT LOGIC DIAGRAMS. Supplementing each signal flow diagram is a fault logic diagram (Figures 5-20 through 5-31). The fault logic diagrams are based on fault indications observed during troubleshooting, and consist of a branching series of questions pertaining to fault isolation. The fault indications are located at the left side of the blocks on the diagram. Single-line blocks contain questions requiring measurement by external test equipment. Each question results in a "yes" or "no" answer (represented by solid or broken connecting lines, respectively), thereby leading to further questions and progressively narrowing the possible area of fault. The final question leads to a double-line conclusion block, which lists the probable area of malfunction and references a diagram to be used for further isolation of the fault.

5-22. MAINTENANCE SCHEMATIC DIAGRAMS. Maintenance schematic diagrams (Figures 5-32 through 5-46) are provided for the overall receiver and for each of the major assemblies and subassemblies within the receiver, providing complete schematic coverage of the equipment. Major signal paths are shown by heavier line weights. These diagrams enable isolation of a fault to a defective component part.

NOTES FOR FIGURE 5-1

GENERAL NOTES

A. TEST EQUIPMENT REQUIRED:
RF MILLIVOLTMETER 04901-92B-S5 OR EQUIVALENT
RF SIGNAL GENERATOR 28480-8660C WITH PLUG-INS 86601A AND 86632B, OR EQUIVALENT
RF AMPLIFIER TEST FIXTURE TS-3685/WRC-1 (DEPOT ONLY)
DIGITAL MULTIMETER 89536-8800A/AA
ELECTRONIC COUNTER 28480-5328A-H99.

B. THE INFORMATION CONTAINED IN THE FOLLOWING NOTES AND ON THE SIGNAL FLOW DIAGRAM IS ORGANIZED TO ALLOW TROUBLESHOOTING OF RECEIVER FUNCTIONS IN AN OPERATING R-1051H/URR RECEIVER. FOR DEPOT MAINTENANCE, THE MODULE UNDER TEST WILL BE OPERATED IN RF AMPLIFIER TEST FIXTURE TS-3685/WRC-1. THE SIGNAL LEVELS INDICATED ON THE SIGNAL FLOW DIAGRAMS SHALL BE USED TO GUIDE THE SETTINGS OF THE ASSOCIATED TEST GENERATORS. TEST FIXTURE CONTROL SETTINGS SHALL CORRESPOND TO THE SETTINGS OF THEIR COUNTERPART CONTROLS OF THE R-1051H/URR.

C. REFERENCES:
FUNCTIONAL DESCRIPTION, PARAGRAPH 3-22
MAINTENANCE SCHEMATIC, FIGURE 5-35
TROUBLESHOOTING SEQUENCE, FIGURE 5-20
CORRECTIVE MAINTENANCE, PARAGRAPH 6-66
PHYSICAL LOCATION OF TEST POINTS, FIGURES 7-18 AND 7-76.

D. —~~— INDICATES BREAK POINTS USED TO REDUCE DIAGRAM CLUTTER. TO FIND MATING END OF BROKEN LINE PROCEED FROM BREAK POINT IN PARALLEL WITH DIAGRAM BORDER.

E. ——▶—— INDICATES SIGNAL FLOW.

SPECIFIC NOTES

1. PRELIMINARY SETUP. MAKE PRIMARY POWER AVAILABLE TO THE EQUIPMENT BY PLACING SYSTEM CIRCUIT BREAKER TO ON. LOOSEN FRONT PANEL SCREWS AND SLIDE CHASSIS/PANEL ASSEMBLY OUT OF CASE. DEFEAT INTERLOCK SWITCH A1A2S1 BY PULLING SHAFT OUT SO THAT PLUNGER EXTENDS FORWARD OF CASE. MAKE THE FOLLOWING PRELIMINARY CONTROL SETTINGS BEFORE BEGINNING THE TEST PROCEDURE:

UNIT	CONTROL	POSITION
RADIO RECEIVER R-1051H/URR	MODE SELECTOR SWITCH A2A14S2	USB
	MGC/AGC SWITCH A2A14S3	MGC
	GAIN CONTROL A2A14R3	-5.0 V AT A2A2A1TP2
	HZ SWITCH A2A14A11S1	000
	USB LINE LEVEL CONTROL A2A14R2	MIDRANGE
	FREQUENCY CONTROLS	2.100 MHZ

NOTES FOR FIGURE 5-1 (CONTINUED)

SPECIFIC NOTES (CONTINUED)

EST SETUP:
ONNECT RF SIGNAL GENERATOR TO ANT JACK A1J23 AND SET ITS UTPUT FOR A CW FREQUENCY OF 2.101 MHZ, AT 10 MVRMS.

EST STEPS:

-] REFER TO NOTES 1 AND 2 BEFORE PERFORMING TEST. USING RF MILLIVOLTMETER, MEASURE THE RF INPUT VOLTAGE TO THE ANTENNA OVERLOAD ASSEMBLY FROM JACK A1J23 TO BE AS INDICATED AT A2A9E1. ENSURE THE PROBE GROUND LEAD IS CONNECTED TO A2A9E2.
-] USING THE RF MILLIVOLTMETER, MEASURE THE RF OUTPUT VOLTAGE FROM THE ANTENNA OVERLOAD ASSEMBLY TO BE AS INDICATED AT A2A9E3. ENSURE THE PROBE GROUND LEAD IS CONNECTED TO A2A9E2.
-] GROUND THE RF MILLIVOLTMETER TEST PROBE AT A2A4TP1, AND MEASURE RF SIGNAL VOLTAGE IN THE RF AMPLIFIER AT THE OUTPUT OF FILTER A2A4FL2 TO BE AS INDICATED AT A2A4TP2.
-] GROUND THE RF MILLIVOLTMETER TEST PROBE AT A2A4TP4 AND MEASURE RF OUTPUT VOLTAGE FROM THE RF AMPLIFIER TO BE AS INDICATED AT A2A4TP3. NOTE THE DB READING FOR USE IN TEST STEP 5.
-] MEASURE THE RF INPUT VOLTAGE TO THE RF TRANSLATOR TO BE AS INDICATED AT A2A6A8TP5 ON RF MILLIVOLTMETER.
-] USING THE DIGITAL MULTIMETER, MEASURE THE DC CONTROL VOLTAGE TO RELAY A2A9K1 IN THE ANTENNA OVERLOAD ASSEMBLY TO BE AS INDICATED AT A2A9E4.
-] USING THE RF AMPLIFIER TEST FIXTURE AND THE RF MILLIVOLTMETER, MEASURE THE RF SIGNAL VOLTAGE IN THE RF AMPLIFIER AT THE OUTPUT OF A2A4A38 TO BE AS INDICATED AT A2A4A20E1-B. ENSURE THE PROBE GROUND LEAD IS CONNECTED TO A2A4A20E1-A.
-] USING THE RF AMPLIFIER TEST FIXTURE AND THE RF MILLIVOLTMETER, MEASURE THE RF SIGNAL VOLTAGE AT THE GRID (PIN 1) OF RF AMPLIFIER TUBE A2A4V1 TO BE AS INDICATED.

SUREMENT MADE AT DEPOT ONLY.

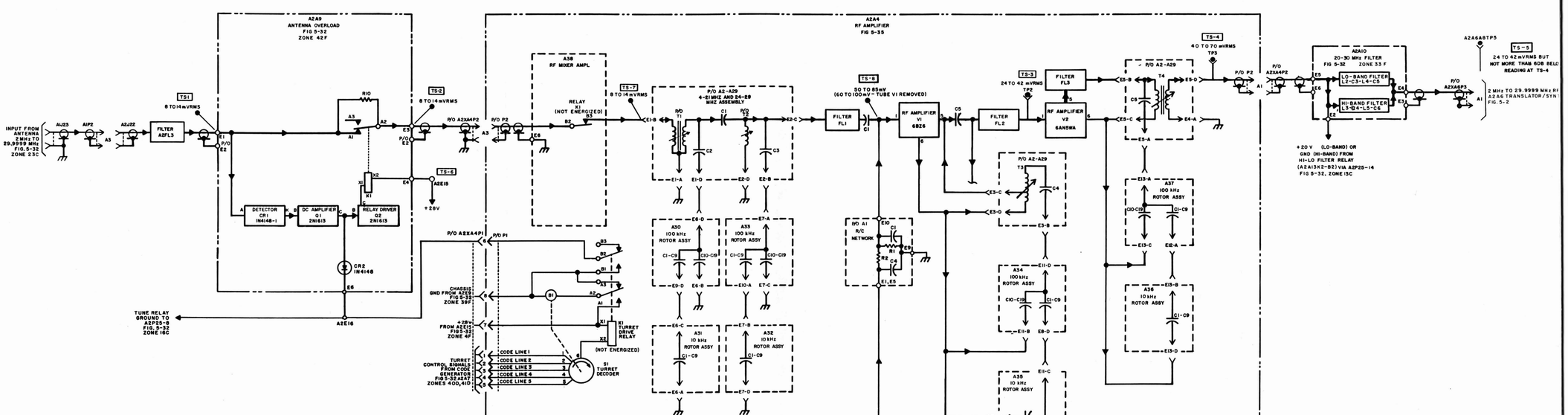

Figure 5-1. Rf Amplification, Selection, Tuni
Overload Protection, Signal Flow Diagra

NOTES FOR FIGURE 5-2

GENERAL NOTES

A. THESE PROCEDURES ARE AUTHORIZED FOR ACCOMPLISHMENT BY DEPOT-LEVEL ACTIVITIES ONLY.

B. TEST EQUIPMENT REQUIRED:
TRANSLATOR/SYNTHESIZER TEST FIXTURE TS-3665/WRC-1
OSCILLOSCOPE 80009-465M OR EQUIVALENT
SPECTRUM ANALYZER 28480-8553B-E03 WITH AC PROBE 28480-1121A
FREQUENCY STANDARD AN/URQ-23 OR EQUIVALENT
RF SIGNAL GENERATOR 28480-8660C WITH PLUG-INS 86601A AND 86632B
RF MILLIVOLTMETER 04901-92B-S5 OR EQUIVALENT.

C. REFERENCES:
FUNCTIONAL DESCRIPTION, PARAGRAPH 3-31
MAINTENANCE SCHEMATIC, FIGURE 5-37
TROUBLESHOOTING SEQUENCE, FIGURE 5-21
CORRECTIVE MAINTENANCE, PARAGRAPH 6-88
PHYSICAL LOCATION OF TEST POINTS, FIGURE 7-65.

D. ——≀≀—— INDICATES BREAK POINTS USED TO REDUCE DIAGRAM CLUTTER. TO FIND MATING END OF BROKEN LINE PROCEED FROM BREAK POINT IN PARALLEL WITH DIAGRAM BORDER.

E. ——▶—— INDICATES SIGNAL FLOW.

SPECIFIC NOTES

1. PRELIMINARY SETUP:
PLACE TRANSLATOR/SYNTHESIZER ASSEMBLY A2A6 ON DEPOT TEST FIXTURE. BE SURE CONNECTORS AND COUPLERS ARE PROPERLY MATED. REMOVE LEFT SIDE COVER OF A2A6. SET CONTROLS ON TEST FIXTURE TO TEST A WRC-1 100 HZ INCREMENT TRANSLATOR/SYNTHESIZER ASSEMBLY IN RECEIVING MODE WITHOUT VERNIER ACTION. MAINTAIN A NORMAL +20 V SUPPLY LEVEL.

2. TEST SETUP:

   a. CONNECT FREQUENCY STANDARD 5 MHZ OUTPUT TO EXTERNAL 5 MHZ INPUT JACK ON REAR OF TEST FIXTURE.

   b. CONNECT RF MILLIVOLTMETER TO 10 MHZ REFERENCE JACK ON REAR OF TEST FIXTURE. ADJUST 10 MHz LEVEL FOR A METER INDICATION OF 30 ±10 MVRMS.

   c. CONNECT OUTPUT OF RF SIGNAL GENERATOR TO RF INPUT CONNECTOR ON REAR OF TEST FIXTURE. SET OUTPUT OF RF SIGNAL GENERATOR FOR 22.505 MHZ FOR A 5 MVRMS INDICATION ON SIGNAL GENERATOR OUTPUT METER.

   d. ENTER 22.505 MHZ INTO THE TEST FIXTURE.

NOTES FOR FIGURE 5-2 (CONTINUED)

SPECIFIC NOTES (CONTINUED)

e. CONNECT OSCILLOSCOPE TO A2A6A8TP8. OUTPUT MUST BE BETWEEN 250 AND 140 MV P-P. IF CORRECT OUTPUT IS NOT OBTAINED, REFER TO TABLE 6-6, PARAGRAPH 6.

f. FREQUENCY MEASUREMENTS MAY BE MADE BY CONNECTING THE SPECTRUM ANALYZER WITH RF SIGNAL GENERATOR IN "RESTORE SIGNAL" MODE.

3. TEST STEPS:

TS-1	REFER TO NOTES 1 AND 2 BEFORE PERFORMING TESTS. CONNECT OSCILLOSCOPE TO A2A6A8TP8. MEASURE IF OUTPUT. SINE WAVE FREQUENCY AND AMPLITUDE SHOULD BE AS INDICATED.
TS-2	CONNECT OSCILLOSCOPE TO A2A6A8E9. SINE WAVE FREQUENCY AND AMPLITUDE SHOULD BE AS INDICATED.
TS-3	CONNECT SPECTRUM ANALYZER TO A2A6A8CR15 CATHODE. OBSERVE 20.005 MHZ. FREQUENCY SHOULD BE AS INDICATED.
TS-4	CONNECT SPECTRUM ANALYZER TO ANODE OF A2A6A8CR10. OBSERVE 20.005 MHZ. FREQUENCY SHOULD BE AS INDICATED.
TS-5	SET OUTPUT OF SIGNAL GENERATOR AND TEST FIXTURE KEYBOARD TO 21.505 MHZ. CONNECT SPECTRUM ANALYZER TO ANODE OF A2A6A8CR10. OBSERVE 30.005 MHZ. FREQUENCY SHOULD BE AS INDICATED.
TS-6	CONNECT OSCILLOSCOPE TO A2A6A8E8. SINE WAVE FREQUENCY AND AMPLITUDE SHOULD BE AS INDICATED.
TS-7	CONNECT SPECTRUM ANALYZER TO A2A6A8CR6 CATHODE. OBSERVE 2.895 MHZ. FREQUENCY SHOULD BE AS INDICATED.
TS-8	CONNECT SPECTRUM ANALYZER TO A2A6A8CR4 ANODE. OBSERVE 2.895 MHZ. FREQUENCY SHOULD BE AS INDICATED.
TS-9	CONNECT OSCILLOSCOPE TO A2A6A8E6. SINE WAVE FREQUENCY AND AMPLITUDE SHOULD BE AS INDICATED.
TS-10	CONNECT SPECTRUM ANALYZER TO A2A6A8Q1 BASE. OBSERVE 500 KHZ. FREQUENCY SHOULD BE AS INDICATED.

4. PREFERRED ARRANGEMENT: R36 LOCATED BETWEEN C45 AND FL1-4.
ALTERNATE ARRANGEMENT: R36 LOCATED BETWEEN C44 AND FL2-2.

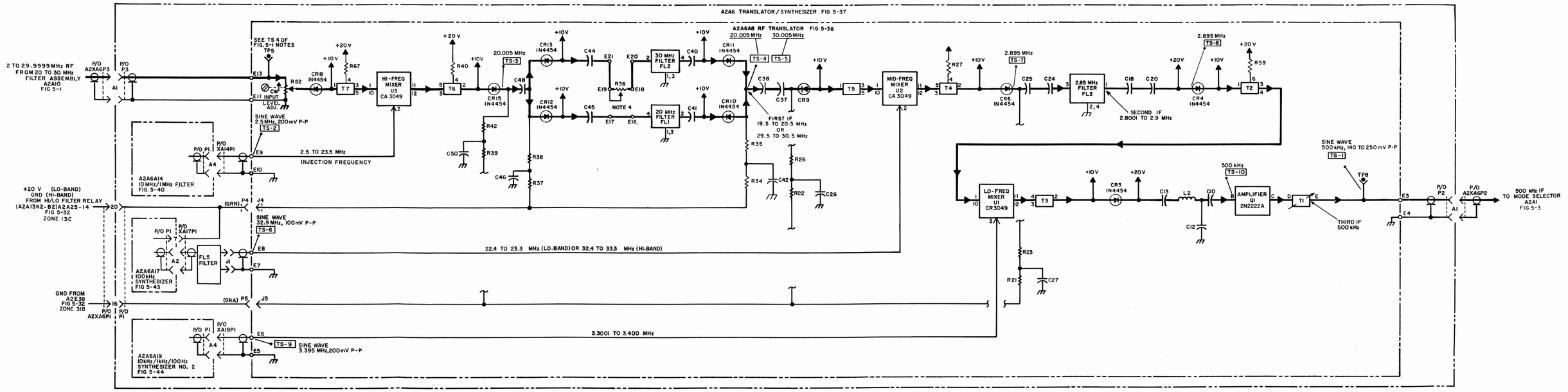

Figure 5-2. A2A6 Translator/Synthesizer, RF to IF Conversion, Signal Flow Diagram

NOTES FOR FIGURE 5-3

GENERAL NOTES

A. TEST EQUIPMENT REQUIRED:
RF SIGNAL GENERATOR 28480-8660C WITH PLUG-INS 86601A AND 86632B OR EQUIVALENT
DIGITAL MULTIMETER 89536-8800A/AA OR EQUIVALENT
OSCILLOSCOPE 80009-465M OR EQUIVALENT
AMPLIFIER/MODE SELECTOR TEST FIXTURE TS-3670/WRC-1
EXTENDER CABLE 98738-30A226280-21-11 FOR IF/AUDIO AMPLIFIER ASSEMBLIES A2A2 AND A2A3
AC VOLTMETER 28480-400E OR EQUIVALENT
RESISTOR, 620 OHMS
RF MILLIVOLTMETER 04901-92B-S5 OR EQUIVALENT
ELECTRONIC COUNTER 28480-5328A-H99.

B. THE INFORMATION CONTAINED IN THE FOLLOWING NOTES AND ON THE SIGNAL FLOW DIAGRAM IS ORGANIZED TO ALLOW TROUBLESHOOTING OF RECEIVER FUNCTIONS IN AN OPERATING R-1051H/URR RECEIVER. FOR DEPOT MAINTENANCE THE MODULE UNDER TEST WILL BE OPERATED IN AMPLIFIER/MODE SELECTOR TEST FIXTURE TS-3670/WRC-1. THE SIGNAL LEVELS INDICATED ON THE SIGNAL FLOW DIAGRAMS SHALL BE USED TO GUIDE THE SETTINGS OF THE ASSOCIATED TEST GENERATORS. TEST FIXTURE CONTROL SETTINGS SHALL CORRESPOND TO THE SETTINGS OF THEIR COUNTERPART CONTROLS OF THE R-1051H/URR.

C. REFERENCES:
FUNCTIONAL DESCRIPTION, PARAGRAPH 3-46
MAINTENANCE SCHEMATIC, FIGURES 5-33 AND 5-34
TROUBLESHOOTING SEQUENCE, FIGURE 5-22
CORRECTIVE MAINTENANCE, PARAGRAPH 6-55
PHYSICAL LOCATION OF TEST POINTS, FIGURES 7-11, 7-12, 7-13 AND 7-14.

D. ——≀≀—— INDICATES BREAK POINTS USED TO REDUCE DIAGRAM CLUTTER. TO FIND MATING END OF BROKEN LINE PROCEED FROM BREAK POINT IN PARALLEL WITH DIAGRAM BORDER.

E. ——▶—— INDICATES SIGNAL FLOW.

F. ——◀◀—— INDICATES FEEDBACK.

SPECIFIC NOTES

1. PRELIMINARY SETUP. MAKE PRIMARY POWER AVAILABLE TO THE EQUIPMENT BY PLACING SYSTEM CIRCUIT BREAKER TO ON. LOOSEN FRONT-PANEL SCREWS AND SLIDE CHASSIS/PANEL ASSEMBLY OUT OF CASE. DEFEAT INTERLOCK SWITCH A1A2S1 BY PULLING SHAFT OUT SO THAT PLUNGER EXTENDS FORWARD OF CASE. MAKE THE FOLLOWING PRELIMINARY CONTROL SETTINGS BEFORE BEGINNING THE TEST PROCEDURE:

NOTES FOR FIGURE 5-3 (CONTINUED)

SPECIFIC NOTES (CONTINUED)

UNIT	CONTROL	POSITION
RADIO RECEIVER R-1051H/URR	MODE SELECTOR SWITCH A2A14S2	STDBY
	MGC/AGC SWITCH A2A14S3	MGC
	GAIN CONTROL A2A14R3	FULLY CLOCKWISE
	USB LINE LEVEL CONTROL A2A14R2	MIDRANGE
	LSB LINE LEVEL CONTROL A2A14R1	MIDRANGE
	Hz SWITCH A2A14A11S1	000
	FREQUENCY CONTROLS	2.100 MHZ

2. TEST SETUP:

a. APPLY THE RF OUTPUT FROM THE RF SIGNAL GENERATOR TO THE RECEIVER ANT 50 OHMS JACK A1J23. SET THE SIGNAL GENERATOR OUTPUT FOR A FREQUENCY OF 2.101 MHZ, AT 500 UV.

NOTE

THE MODE SELECTOR INPUT SIGNAL AS MEASURED AT RF TRANSLATOR TEST POINT A2A6A8TP8 DROPS TO 5mV WHEN THE MGC/AGC SWITCH A2A14S3 IS SET TO SLOW.

b. REMOVE IF/AUDIO AMPLIFIERS A2A2 AND A2A3 FROM RECEIVER AND RECONNECT VIA THE EXTENDER CABLES.

c. LOOSEN THE SCREWS AND REMOVE COVERS FROM BOTH IF/AUDIO AMPLIFIERS.

d. CONNECT A 620 OHM TERMINATING RESISTOR BETWEEN PINS A AND B OF USB AUDIO OUT JACK A1A1J5. CONNECT VERTICAL INPUT OF OSCILLOSCOPE AND DIGITAL MULTIMETER INPUT TO PINS A AND B OF JACK A1A1J5; CONNECT LOW SIDE OF DIGITAL MULTIMETER AND OSCILLOSCOPE TO PIN B. SET MODE SELECTOR SWITCH A2A14S2 TO USB.

NOTE

ADJUST THE RF SIGNAL GENERATOR FOR OPTIMUM FREQUENCY OUTPUT BY ADJUSTING THE FREQUENCY CONTROL FOR MAXIMUM AUDIO OUTPUT AS OBSERVED ON THE AC VOLTMETER AT A1A1J5.

3. TEST STEPS:

TS-1 REFER TO NOTES 1 AND 2 BEFORE PERFORMING TEST. ADJUST GAIN CONTROL A2A14R3 TO OBTAIN INPUT SIGNAL LEVEL TO THE MODE SELECTOR AT A2A2A1TP1 OF 27 MVRMS AS MEASURED ON THE RF MILLIVOLTMETER.

NOTES FOR FIGURE 5-3 (CONTINUED)

SPECIFIC NOTES (CONTINUED)

TS-2 MEASURE THE 501 KHZ IF INPUT SIGNAL LEVEL TO THE USB IF/AUDIO AMPLIFIER AT A2A2A2E1 ON THE RF MILLIVOLTMETER TO BE AS INDICATED.

TS-3 ADJUST FREQUENCY OF SIGNAL GENERATOR FOR A PEAK READING ON THE RF MILLIVOLTMETER AS A REFERENCE. INCREASE FREQUENCY OF SIGNAL GENERATOR UNTIL THE METER READING DROPS 3 DB (.707 OF VOLTAGE REFERENCE). CONNECT COUNTER TO A2A1A1TP1. INCREASE SIGNAL GENERATOR AMPLITUDE MOMENTARILY SO THAT COUNTER OPERATES. THE FREQUENCY SHALL BE AS INDICATED FOR UPPER BAND EDGE. REPEAT TEST FOR LOWER -3 DB POINT. THE FREQUENCY SHALL BE AS INDICATED FOR LOWER BAND EDGE.

TS-4 MEASURE THE 501 KHZ IF INPUT SIGNAL TO THE USB PRODUCT DETECTOR A2A2A3Q1 AT A2A2A2E15 ON THE RF MILLIVOLTMETER TO BE AS INDICATED.

TS-5 MEASURE THE 500 KHZ IF INJECTION SIGNAL TO THE EMITTER OF THE USB PRODUCT DETECTORS ON THE RF MILLIVOLTMETER AT A2A2A3TP1 TO BE AS INDICATED.

TS-6 MEASURE THE AUDIO OUTPUT SIGNAL OF THE USB IF/AUDIO AMPLIFIER WITH A2A14R2 FULLY CCW AND WITH A2A14R2 FULLY CW ON THE MULTIMETER AT A2A2A3E7. VOLTAGES TO BE AS INDICATED.

TS-7 SET RF SIGNAL GENERATOR FOR A LOCKED FREQUENCY OUTPUT OF 2.100 MHZ. MODULATE THE RF SIGNAL GENERATOR OUTPUT WITH 1000 Hz AT 30 PERCENT. SET MODE SELECTOR SWITCH A2A14S2 TO AM, AND VERIFY THE MEASUREMENTS AT THE TEST POINTS FOR TS-1 AND TS-2, OBSERVING THE SAME INDICATIONS ON THE RF MILLIVOLTMETER. MEASURE THE IF INPUT SIGNAL TO THE BASE OF THE USB PRODUCT DETECTOR A2A2A3Q2 ON THE RF MILLIVOLTMETER AT A2A2A2E17 TO BE AS INDICATED.

TS-8 SET THE SIGNAL GENERATOR FOR CW OPERATION AND MEASURE THE -3 DB POINTS FOR AM/CW OPERATION IN A MANNER SIMILAR TO THAT OUTLINED IN TS-3 FOR USB OPERATION.

TS-9 MEASURE THE AUDIO OUTPUT VOLTAGE OF THE AM DETECTOR ON THE AC VOLTMETER AT A2A2A3E3 TO BE AS INDICATED.

TS-10 REMOVE THE MODULATION FROM THE OUTPUT SIGNAL OF THE RF SIGNAL GENERATOR. SET THE MODE SELECTOR SWITCH A2A14S2 TO CW. MEASURE THE BFO INPUT SIGNAL TO THE CATHODE OF THE AM DETECTOR ON THE OSCILLOSCOPE AT A2A2A3Q3 COLLECTOR TO BE AS INDICATED. CONNECT HEADSET TO PHONE USB JACK A2A14J2. WITH THE USB LINE LEVEL CONTROL A2A14R2 AT MIDRANGE AND PHONE USB VOL CONTROL A2A14R5 AT THE FULLY COUNTERCLOCKWISE POSITION, ADJUST A2A14R5

NOTES FOR FIGURE 5-3 (CONTINUED)

SPECIFIC NOTES (CONTINUED)

SLOWLY CLOCKWISE UNTIL THE AUDIO LEVEL IS COMFORTABLE, THEN VARY BFO CONTROL A2A14R6. AN AUDIBLE TONE SHOULD BE HEARD IN THE EARPHONES WITH A ZERO BEAT NEAR THE MIDRANGE OF BFO CONTROL A2A14R6.

TS-11 DISCONNECT TEST EQUIPMENT FROM JACK A1A1J5. CONNECT A 620 OHM LOAD RESISTOR ACROSS PINS A AND B OF LSB AUDIO OUT JACK A1A1J6. CONNECT VERTICAL INPUT OF OSCILLOSCOPE AND AC VOLTMETER INPUT ACROSS PINS A AND B OF JACK A1A1J6; CONNECT LOW SIDE OF DIGITAL MULTIMETER AND OSCILLOSCOPE TO PIN B. SET MODE SELECTOR SWITCH A2A14S2 TO LSB. ADJUST RF SIGNAL GENERATOR OUTPUT FREQUENCY FOR 2.099 MHZ BY PEAKING AUDIO OUTPUT OF RECEIVER AS OBSERVED ON DIGITAL MULTIMETER. ADJUST GAIN CONTROL A2A14R3 TO OBTAIN INPUT SIGNAL LEVEL TO THE MODE SELECTOR AT A2A2A1TP1 OF 27 MVRMS ON THE RF MILLIVOLTMETER.

TS-12 MEASURE THE 499 kHz IF INPUT SIGNAL LEVEL TO THE IF/AUDIO AMPLIFIER AT A2A3A2E1 ON THE RF MILLIVOLTMETER TO BE AS INDICATED.

TS-13 IN A MANNER SIMILAR TO TS-3, MEASURE THE -3 DB POINTS FOR LSB OPERATION.

TS-14 MEASURE THE 499 KHZ IF SIGNAL TO THE LSB PRODUCT DETECTOR A2A3A3Q1 ON THE RF MILLIVOLTMETER AT A2A3A2E15 TO BE AS INDICATED.

TS-15 MEASURE THE 499 KHZ IF SIGNAL TO THE LSB PRODUCT DETECTOR A2A3A3Q2 ON THE RF MILLIVOLTMETER AT A2A3A2E17 TO BE AS INDICATED.

TS-16 MEASURE THE 500 KHZ IF INJECTION SIGNAL TO THE PRODUCT DETECTOR ON THE RF MILLIVOLTMETER AT A2A3A3TP1 TO BE AS INDICATED.

TS-17 MEASURE THE AUDIO OUTPUT SIGNAL OF THE LSB IF/AUDIO AMPLIFIER WITH A2A14R1 FULLY CCW AND WITH A2A14R1 FULLY CW ON THE MULTIMETER AT A2A3A1E1. VOLTAGES TO BE AS INDICATED.

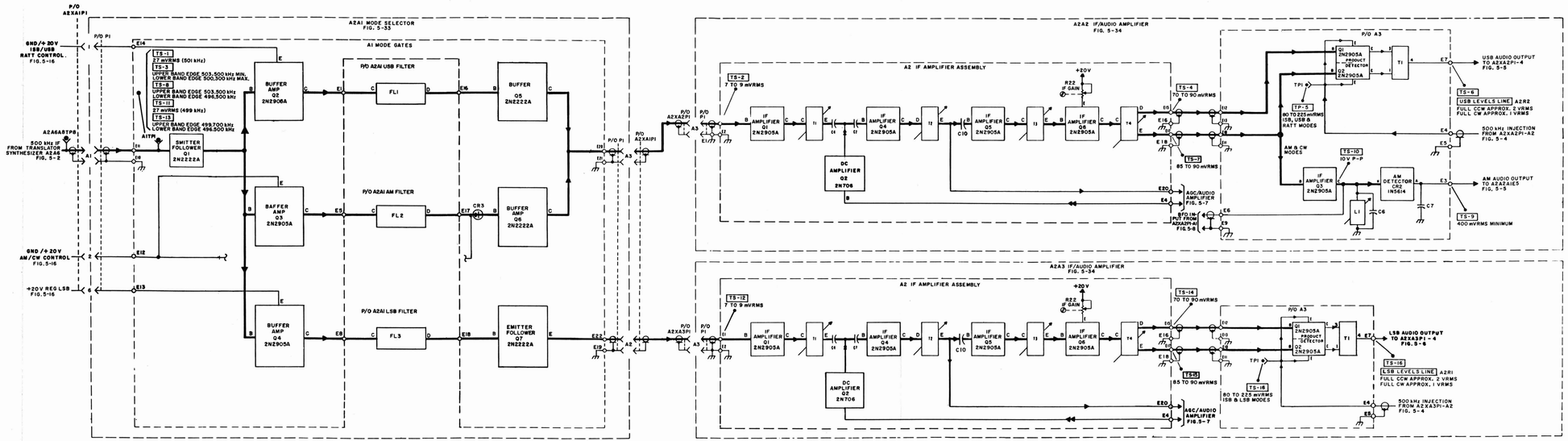

Figure 5-3. IF Amplification and Control, Signal Flow Diagram

NOTES FOR FIGURE 5-4

GENERAL NOTES

A. TEST EQUIPMENT REQUIRED:
DIGITAL MULTIMETER 89536-8800A/AA OR EQUIVALENT
RF MILLIVOLTMETER 04901-92B-S5 OR EQUIVALENT
AMPLIFIER/MODE SELECTOR TEST FIXTURE TS-3670/WRC-1
EXTENDER CABLES 98738-30A226277-21-11 AND 98738-30A226426-21-11 FOR MODE SELECTOR ASSEMBLY A2A1.

B. THE INFORMATION CONTAINED IN THE FOLLOWING NOTES AND ON THE SIGNAL FLOW DIAGRAM IS ORGANIZED TO ALLOW TROUBLESHOOTING OF RECEIVER FUNCTIONS IN AN OPERATING R-1051H/URR RECEIVER. FOR DEPOT MAINTENANCE THE MODULE UNDER TEST WILL BE OPERATED IN AMPLIFIER/MODE SELECTOR TEST FIXTURE TS-3670/WRC-1. THE SIGNAL LEVELS INDICATED ON THE SIGNAL FLOW DIAGRAMS SHALL BE USED TO GUIDE THE SETTINGS OF THE ASSOCIATED TEST GENERATORS. TEST FIXTURE CONTROL SETTINGS SHALL CORRESPOND TO THE SETTINGS OF THEIR COUNTERPART CONTROLS OF THE R-1051H/URR.

C. REFERENCES:
FUNCTIONAL DESCRIPTION, PARAGRAPH 3-57
MAINTENANCE SCHEMATIC, FIGURES 5-33, 5-34 AND 5-36
CORRECTIVE MAINTANANCE, PARAGRAPH 6-45
PHYSICAL LOCATION OF TEST POINTS, FIGURES 7-7, 7-9, 7-11 AND 7-14.

D. ——▶ INDICATES SIGNAL FLOW.

SPECIFIC NOTES

1. PRELIMINARY SETUP. MAKE PRIMARY POWER AVAILABLE TO THE EQUIPMENT BY PLACING SYSTEM CIRCUIT BREAKER TO ON. LOOSEN FRONT-PANEL SCREWS AND SLIDE CHASSIS/PANEL ASSEMBLY OUT OF CASE. DEFEAT INTERLOCK SWITCH A1A2S1 BY PULLING SHAFT OUT SO THAT PLUNGER EXTENDS FORWARD OF CASE. MAKE THE FOLLOWING PRELIMINARY CONTROL SETTINGS BEFORE BEGINNING THE TEST PROCEDURE:

UNIT	CONTROL	POSITION
RADIO RECEIVER R-1051H/URR	MODE SELECTOR SWITCH A2A14S2	STDBY
	FREQUENCY CONTROLS	2.100 MHZ

2. TEST SETUP:

a. REMOVE RECEIVER MODE SELECTOR ASSEMBLY A2A1 FROM RECEIVER AND RECONNECT VIA THE EXTENDER CABLES.

b. LOOSEN THE SCREWS AND REMOVE COVER FROM MODE SELECTOR.

NOTES FOR FIGURE 5-4 (CONTINUED)

SPECIFIC NOTES (CONTINUED)

3. TEST STEPS:

TS-1 REFER TO NOTES 1 AND 2 BEFORE PERFORMING TEST. USING THE MULTIMETER, MEASURE THE OPERATING VOLTAGE INPUT TO THE 500 kHz GATE SUBASSEMBLY AT A2A1A2E5 TO BE AS INDICATED FOR ISB. SET THE MODE SELECTOR SWITCH CONSECUTIVELY TO RATT, AM, CW, USB, LSB, AND VERIFY THAT THE VOLTAGE AMPLITUDE AT A2A1A2E5 IS AS SPECIFIED. RESET THE MODE SELECTOR SWITCH TO LSB.

TS-2 USING THE RF MILLIVOLTMETER, MEASURE THE 500 kHz OUTPUT SIGNAL FROM THE 500 kHz GATE SUBASSEMBLY AT A2A1A2E2 TO BE AS SPECIFIED.

TS-3 MEASURE THE GATED 500 KHZ INPUT SIGNAL TO THE USB IF AUDIO AMPLIFIER AT A2A2A3TP1 ON THE RF MILLIVOLTMETER TO BE AS SPECIFIED.

TS-4 MEASURE THE GATED 500 KHZ INPUT SIGNAL TO THE LSB IF AUDIO AMPLIFIER AT A2A3A3TP2 ON THE RF MILLIVOLTMETER TO BE AS SPECIFIED.

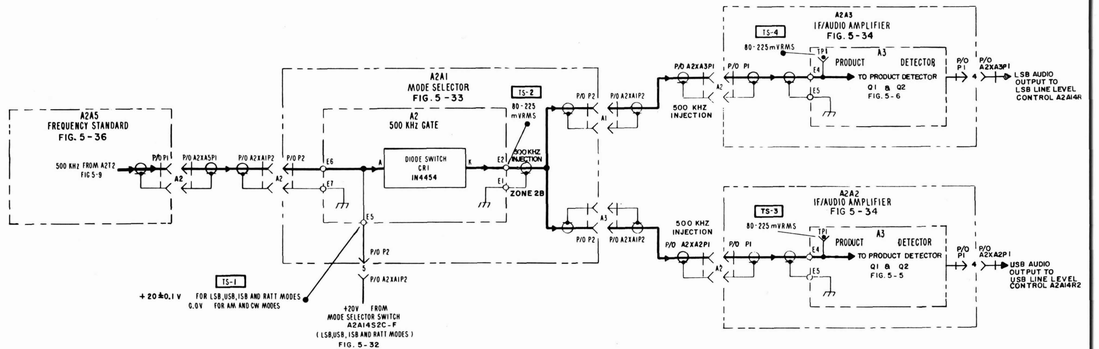

Figure 5-4. 500 kHz Gating, Signal Flow Diagram

NOTES FOR FIGURE 5-5

GENERAL NOTES

A. TEST EQUIPMENT REQUIRED:
RF SIGNAL GENERATOR 28480-8660C WITH PLUG-INS 86601A AND 86632B OR EQUIVALENT
DIGITAL MULTIMETER 89536-8800A/AA OR EQUIVALENT
OSCILLOSCOPE 80009-465M OR EQUIVALENT
AMPLIFIER/MODE SELECTOR TEST FIXTURE TS-3670/WRC-1
EARPHONE HEADSET NT-49985/A OR EQUIVALENT
EXTENDER CABLE 98738-30A226280-21-11 FOR IF/AUDIO AMPLIFIER ASSEMBLIES A2A2 AND A2A3
AC VOLTMETER 28480-400E OR EQUIVALENT
RESISTOR, 620 OHMS.

B. THE INFORMATION CONTAINED IN THE FOLLOWING NOTES AND ON THE SIGNAL FLOW DIAGRAM IS ORGANIZED TO ALLOW TROUBLESHOOTING OF RECEIVER FUNCTIONS IN AN OPERATING R-1051H/URR RECEIVER. FOR DEPOT MAINTENANCE THE MODULE UNDER TEST WILL BE OPERATED IN AMPLIFIER/MODE SELECTOR TEST FIXTURE TS-3670/WRC-1. THE SIGNAL LEVELS INDICATED ON THE SIGNAL FLOW DIAGRAMS SHALL BE USED TO GUIDE THE SETTINGS OF THE ASSOCIATED TEST GENERATORS. TEST FIXTURE CONTROL SETTINGS SHALL CORRESPOND TO THE SETTINGS OF THEIR COUNTERPART CONTROLS OF THE R-1051H/URR.

C. REFERENCES:
FUNCTIONAL DESCRIPTION, PARAGRAPH 3-63
MAINTENANCE SCHEMATIC, FIGURES 5-32 AND 5-34
TROUBLESHOOTING SEQUENCE, FIGURE 5-23
CORRECTIVE MAINTENANCE, PARAGRAPH 6-56
PHYSICAL LOCATION OF TEST POINTS, FIGURES 7-11 THROUGH 7-14.

D. ——▶—— INDICATES SIGNAL FLOW.

E. ——◀◀—— DENOTES FEEDBACK.

SPECIFIC NOTES

1. PRELIMINARY SETUP. MAKE PRIMARY POWER AVAILABLE TO THE EQUIPMENT BY PLACING SYSTEM CIRCUIT BREAKER TO ON. LOOSEN FRONT PANEL SCREWS AND SLIDE CHASSIS/PANEL ASSEMBLY OUT OF CASE. DEFEAT INTERLOCK SWITCH A1A2S1 BY PULLING SHAFT OUT SO THAT PLUNGER EXTENDS FORWARD OF CASE. MAKE THE FOLLOWING PRELIMINARY CONTROL SETTINGS BEFORE BEGINNING THE TEST PROCEDURE:

UNIT	CONTROL	POSITION
RADIO RECEIVER R-1051H/URR	MODE SELECTOR SWITCH A2A14S2	STDBY
	MGC/AGC SWITCH A2A14S3	SLOW
	AUDIO LEVEL METER SWITCH A2A14A12S1	USB, +20 DBM
	Hz SWITCH A2A14A11S1	000
	FREQUENCY CONTROLS	2.100 MHZ

NOTES FOR FIGURE 5-5 (CONTINUED)

SPECIFIC NOTES (CONTINUED)

2. TEST SETUP:

a. APPLY THE OUTPUT FROM THE RF SIGNAL GENERATOR TO THE RECEIVER ANT 50 OHMS JACK A1J23. SET THE RF SIGNAL GENERATOR OUTPUT FOR A FREQUENCY OF 2.101 MHZ AT 500 UVRMS.

b. REMOVE IF/AUDIO AMPLIFIER ASSEMBLY A2A2 FROM RECEIVER AND RECONNECT VIA THE EXTENDER CABLE.

c. LOOSEN THE SCREWS AND REMOVE COVER FROM IF/AUDIO AMPLIFIER A2A2.

d. CONNECT A 620 OHM TERMINATING RESISTOR BETWEEN PINS A AND B OF USB AUDIO OUT JACK A1A1J5. CONNECT VERTICAL INPUT OF OSCILLOSCOPE AND MULTIMETER INPUT TO PINS A AND B OF A1A1J5. CONNECT LOW SIDE OF MULTIMETER AND OSCILLOSCOPE TO PIN B. SET THE MODE SELECTOR SWITCH A2A14S2 TO USB.

NOTE

ADJUST THE RF SIGNAL GENERATOR FOR OPTIMUM FREQUENCY OUTPUT BY ADJUSTING THE FREQUENCY CONTROL FOR MAXIMUM AUDIO OUTPUT AS OBSERVED ON THE MULTIMETER AT A1A1J5.

3. TEST STEPS:

TS-1 REFER TO NOTES 1 AND 2 BEFORE PERFORMING TEST. USING THE MULTIMETER, MEASURE THE PRODUCT DETECTOR OUTPUT AUDIO SIGNAL LEVEL TO BE AS INDICATED AT A2A2A1E6.

TS-2 MEASURE THE SIGNAL LEVEL AT A2A2A2E8 TO BE AS INDICATED. MULTIMETER INDICATION DEPENDS ON SETTING OF USB LINE LEVEL CONTROL A2A14R2.

TS-3 MEASURE THE AUDIO SIGNAL LEVEL BETWEEN A2E26 AND A2E23 TO BE AS INDICATED; MULTIMETER INDICATION DEPENDS ON SETTING OF USB LINE LEVEL CONTROL A2A14R2. CONNECT A2E23 TO LOW SIDE OF MULTIMETER. THE MULTIMETER CONNECTED ACROSS PINS A AND B OF A1A1J5 GIVES THE SAME INDICATION AT TS-6.

TS-4 THE AUDIO LEVEL METER HAS A RANGE FROM -20 DBM TO +22 DBM IN 10 DB STEPS. THE ZERO READING ON THE METER IS THE LEVEL INDICATED BY THE SWITCH POSITIONS -10, 0, +10, OR +20 DBM. THE INDICATION OF THE AUDIO LEVEL METER VARIES WITH THE SETTING OF THE USB LINE LEVEL CONTROL A2A14R2. SET THE AUDIO LEVEL SWITCH TO +20 DBM USB. ADJUST THE USB LINE LEVEL CONTROL A2A14R2 TO OBTAIN A READING OF 0 DBM ON THE AUDIO OUTPUT METER. THE READING ON THE AC VOLTMETER CONNECTED BETWEEN A2E23 AND A2E26 SHOULD READ

NOTES FOR FIGURE 5-5 (CONTINUED)

SPECIFIC NOTES (CONTINUED)

+20 ±1 DBM. SWITCH THE METER TO THE +10 DBM SCALE AND ADJUST A2A14R2 FOR A 0 DB READING. CHECK THAT THE VOLTMETER READS +10 ±1 DBM. SWITCH THE METER TO THE 0 DBM SCALE AND ADJUST A2A14R2 FOR A 0 DBM READING. CHECK THAT THE VOLTMETER READS 0 ±1 DBM. SWITCH THE METER TO THE -10 DBM SCALE AND ADJUST A2A14R2 FOR A 0 DBM READING. CHECK THAT THE VOLTMETER READS -10 ±1 DBM.

TS-5 WITH EARPHONES CONNECTED TO THE PHONE USB JACK A2A14J2, THE AUDIO LEVEL SHOULD FOLLOW THE VARIATION OF THE PHONE USB VOL CONTROL A2A14R5. WITH USB LINE LEVEL CONTROL A2A14R2 SET SO THAT AUDIO LEVEL METER A2A14M1 INDICATES 0 DBM, THE PHONE USB LEVEL SHOULD VARY IN INTENSITY OF TONE AT THE EARPHONES FROM AN ADEQUATE AUDIBLE LEVEL AT A FULLY CLOCKWISE SETTING OF PHONE USB VOL CONTROL A2A14R5 TO NO TONE AT A FULLY COUNTERCLOCKWISE SETTING.

TS-6 CONNECT VOLTMETER BETWEEN PINS A AND B OF CONNECTOR A1A1J5. SET THE AUDIO LEVEL SWITCH TO 0 DBM USB. THE TEST POINT MEASUREMENT ON THE VOLTMETER IS AS INDICATED WITH THE AUDIO LEVEL METER A2A14M1 INDICATION OF 9 DBM, AS ADJUSTED BY USB LINE LEVEL CONTROL A2A14R2, AND WITH PHONE USB VOL CONTROL A2A14R5 ADJUSTED FULLY CLOCKWISE. SET THE MODE SELECTOR SWITCH A2A14S2 TO RATT. VOLTAGE AS MEASURED ON VOLTMETER TO BE AS INDICATED. SET THE MODE SELECTOR SWITCH A2A14S2 TO CW. ADJUST THE BFO CONTROL TO OBTAIN A 1000 HZ TONE. DETERMINE THAT VOLTMETER CAN BE ADJUSTED TO 0 DBM BY USING USB LINE LEVEL CONTROL A2A14R5. SET THE MODE SELECTOR SWITCH A2A14S2 TO AM. MODULATE THE RF SIGNAL GENERATOR WITH 1000 HZ AT 30 PERCENT. DETERMINE THAT VOLTMETER CAN BE ADJUSTED TO 0 DBM BY USING USB LINE LEVEL CONTROL A2A14R5.

TS-7 USING THE VOLTMETER, MAKE THE SIGNAL MEASUREMENT AT A2A2A1E5 TO BE AS INDICATED.

TS-8 MEASURE THE SIGNAL VOLTAGE AT A2A2A1E6 TO BE AS INDICATED ON THE VOLTMETER.

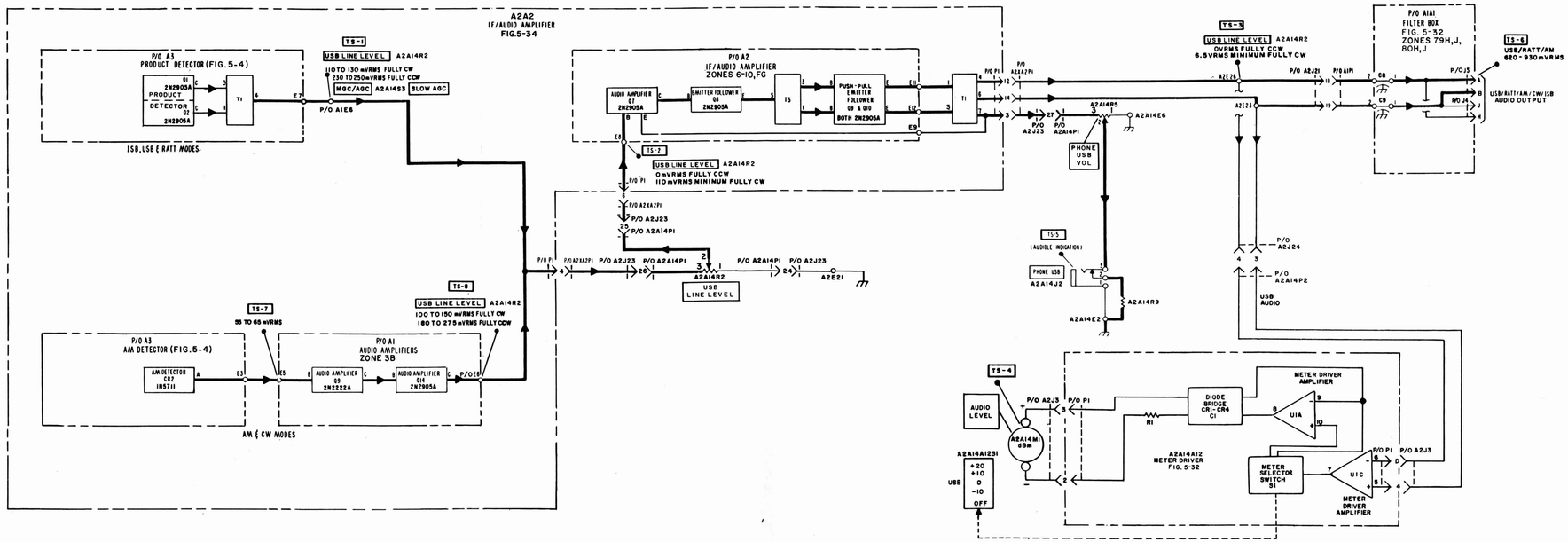

Figure 5-5. Audio Amplification (USB, RATT, AM, CW and ISB Modes), Signal Flow Diagram

NOTES FOR FIGURE 5-6

GENERAL NOTES

A. TEST EQUIPMENT REQUIRED:
RF SIGNAL GENERATOR 28480-8660C WITH PLUG-INS 86601A AND 86632B OR EQUIVALENT
DIGITAL MULTIMETER 89536-8800A/AA OR EQUIVALENT
OSCILLOSCOPE 80009-465M OR EQUIVALENT
AMPLIFIER/MODE SELECTOR TEST FIXTURE TS-3670/WRC-1
EARPHONE HEADSET NT-49985/A
EXTENDER CABLE/98738-30A226280-21-11 FOR IF/AUDIO AMPLIFIER ASSEMBLIES A2A2 AND A2A3
AC VOLTMETER 28480-400E OR EQUIVALENT
RESISTOR, 620 OHMS.

B. THE INFORMATION CONTAINED IN THE FOLLOWING NOTES AND ON THE SIGNAL FLOW DIAGRAM IS ORGANIZED TO ALLOW TROUBLESHOOTING OF RECEIVER FUNCTIONS IN AN OPERATING R-1051H/URR RECEIVER. FOR DEPOT MAINTENANCE THE MODULE UNDER TEST WILL BE OPERATED IN AMPLIFIER/MODE SELECTOR TEST FIXTURE TS-3670/WRC-1. THE SIGNAL LEVELS INDICATED ON THE SIGNAL FLOW DIAGRAMS SHALL BE USED TO GUIDE THE SETTINGS OF THE ASSOCIATED TEST GENERATORS. TEST FIXTURE CONTROL SETTINGS SHALL CORRESPOND TO THE SETTINGS OF THEIR COUNTERPART CONTROLS OF THE R-1051H/URR.

C. REFERENCES:
FUNCTIONAL DESCRIPTION, PARAGRAPH 3-68
MAINTENANCE SCHEMATIC, FIGURES 5-32 AND 5-34
TROUBLESHOOTING SEQUENCE, FIGURE 5-24
CORRECTIVE MAINTENANCE, PARAGRAPH 6-56
PHYSICAL LOCATION OF TEST POINTS, FIGURES 7-11 THROUGH 7-13.

D. ——▶—— INDICATES SIGNAL FLOW.

E. ——◀◀—— DENOTES FEEDBACK.

SPECIFIC NOTES

1. PRELIMINARY SETUP. MAKE PRIMARY POWER AVAILABLE TO THE EQUIPMENT BY PLACING SYSTEM CIRCUIT BREAKER TO ON. LOOSEN FRONT PANEL SCREWS AND SLIDE CHASSIS/PANEL ASSEMBLY OUT OF CASE. DEFEAT INTERLOCK SWITCH A1A2S1 BY PULLING SHAFT OUT SO THAT PLUNGER EXTENDS FORWARD OF CASE. MAKE THE FOLLOWING PRELIMINARY CONTROL SETTINGS BEFORE BEGINNING THE TEST PROCEDURE:

UNIT	CONTROL	POSITION
RADIO RECEIVER R-1051H/URR	MODE SELECTOR SWITCH A2A14S2	STDBY
	MGC/AGC SWITCH A2A14S3	SLOW
	AUDIO LEVEL METER SWITCH A2A14A12S1	LSB, +20 DBM
	Hz SWITCH A2A14A11S1	000
	FREQUENCY CONTROLS	2.100 MHZ

NOTES FOR FIGURE 5-6 (CONTINUED)

SPECIFIC NOTES (CONTINUED)

2. TEST SETUP:

   a. APPLY THE OUTPUT FROM THE RF SIGNAL GENERATOR TO THE RECEIVER ANT 50 OHMS JACK A1J23. SET THE RF SIGNAL GENERATOR OUTPUT FOR A FREQUENCY OF 2.099 MHZ AT 500 UVRMS.

   b. REMOVE IF/AUDIO AMPLIFIER ASSEMBLY A2A3 FROM RECEIVER AND RECONNECT VIA THE EXTENDER CABLE.

   c. LOOSEN THE SCREWS AND REMOVE COVER FROM IF/AUDIO AMPLIFIER A2A3.

   d. CONNECT A 620 OHM TERMINATING RESISTOR BETWEEN PINS A AND B OF LSB AUDIO OUT JACK A1A1J6. CONNECT VERTICAL INPUT OF OSCILLOSCOPE AND MULTIMETER INPUT TO PINS A AND B OF JACK A1A1J6; CONNECT LOW SIDE OF MULTIMETER AND OSCILLOSCOPE TO PIN B. SET THE MODE SELECTOR SWITCH A2A14S2 TO LSB.

NOTE

ADJUST THE RF SIGNAL GENERATOR FOR OPTIMUM FREQUENCY OUTPUT BY ADJUSTING THE FREQUENCY CONTROL FOR MAXIMUM AUDIO OUTPUT AS OBSERVED ON THE MULTIMETER AT A1A1J6.

3. TEST STEPS:

TS-1 REFER TO NOTES 1 AND 2 BEFORE PERFORMING TEST. MEASURE THE AUDIO SIGNAL LEVEL AT THE OUTPUT OF THE PRODUCT DETECTOR AT A2A3A1E6 ON THE AC VOLTMETER TO BE AS INDICATED.

TS-2 MEASURE THE SIGNAL LEVEL AT A2A3A2E8 TO BE AS INDICATED. VOLTMETER INDICATION DEPENDS ON SETTING OF LSB LINE LEVEL CONTROL A2A14R1.

TS-3 MEASURE THE AUDIO SIGNAL LEVEL BETWEEN A2E36 AND A2E33 TO BE AS INDICATED; MULTIMETER INDICATION DEPENDS ON SETTING OF LSB LINE LEVEL CONTROL A2A14R1. CONNECT A2E33 TO LOW SIDE OF VOLTMETER. THE MULTIMETER CONNECTED ACROSS PINS A AND B OF A1A1J6 SHOWS THE SAME INDICATION.

TS-4 THE AUDIO LEVEL METER HAS A RANGE FROM -20 DBM TO +22 DBM IN 10 DB STEPS. THE ZERO READING ON THE METER IS THE LEVEL INDICATED BY THE SWITCH POSITIONS -10, 0, +10, OR +20 DBM. THE INDICATION OF THE AUDIO LEVEL METER VARIES WITH THE SETTING OF THE LSB LINE LEVEL CONTROL A2A14R1. SET THE AUDIO LEVEL SWITCH TO +20 DBM LSB. ADJUST THE LSB LINE LEVEL CONTROL A2A14R1 TO OBTAIN A READING OF 0 DBM ON THE AUDIO OUTPUT METER. THE READING ON THE VOLTMETER CONNECTED BETWEEN A2E33 AND A2E36 SHOULD READ +20

NOTES FOR FIGURE 5-6 (CONTINUED)

SPECIFIC NOTES (CONTINUED)

±1 DBM. SWITCH THE METER TO THE +10 DBM SCALE AND ADJUST A2A14R1 FOR A 0 DB READING. CHECK THAT THE VOLTMETER READS +10 ±1 DBM. SWITCH THE METER TO THE 0 DBM SCALE AND ADJUST A2A14R1 FOR A 0 DBM READING. CHECK THAT THE VOLTMETER READS 0 ±1 DBM. SWITCH THE METER TO THE -10 DBM SCALE AND ADJUST A2A14R1 FOR A 0 DBM READING. CHECK THAT THE VOLTMETER READS -10 ±1 DBM.

TS-5 WITH EARPHONES CONNECTED TO PHONE LSB JACK A2A14J1, THE AUDIO LEVEL SHOULD FOLLOW THE VARIATION OF THE PHONE LSB VOL CONTROL A2A14R4. WITH THE LSB LINE LEVEL CONTROL A2A14R1 SET SO THAT AUDIO LEVEL METER A2A14M1 INDICATES 0 DBM, THE LSB PHONE LEVEL SHOULD VARY IN INTENSITY OF TONE AT THE EARPHONES FROM AN ADEQUATE AUDIBLE LEVEL AT A FULLY CLOCKWISE SETTING OF PHONE LSB VOL CONTROL A2A14R4 TO NO TONE AT A FULLY COUNTERCLOCKWISE SETTING.

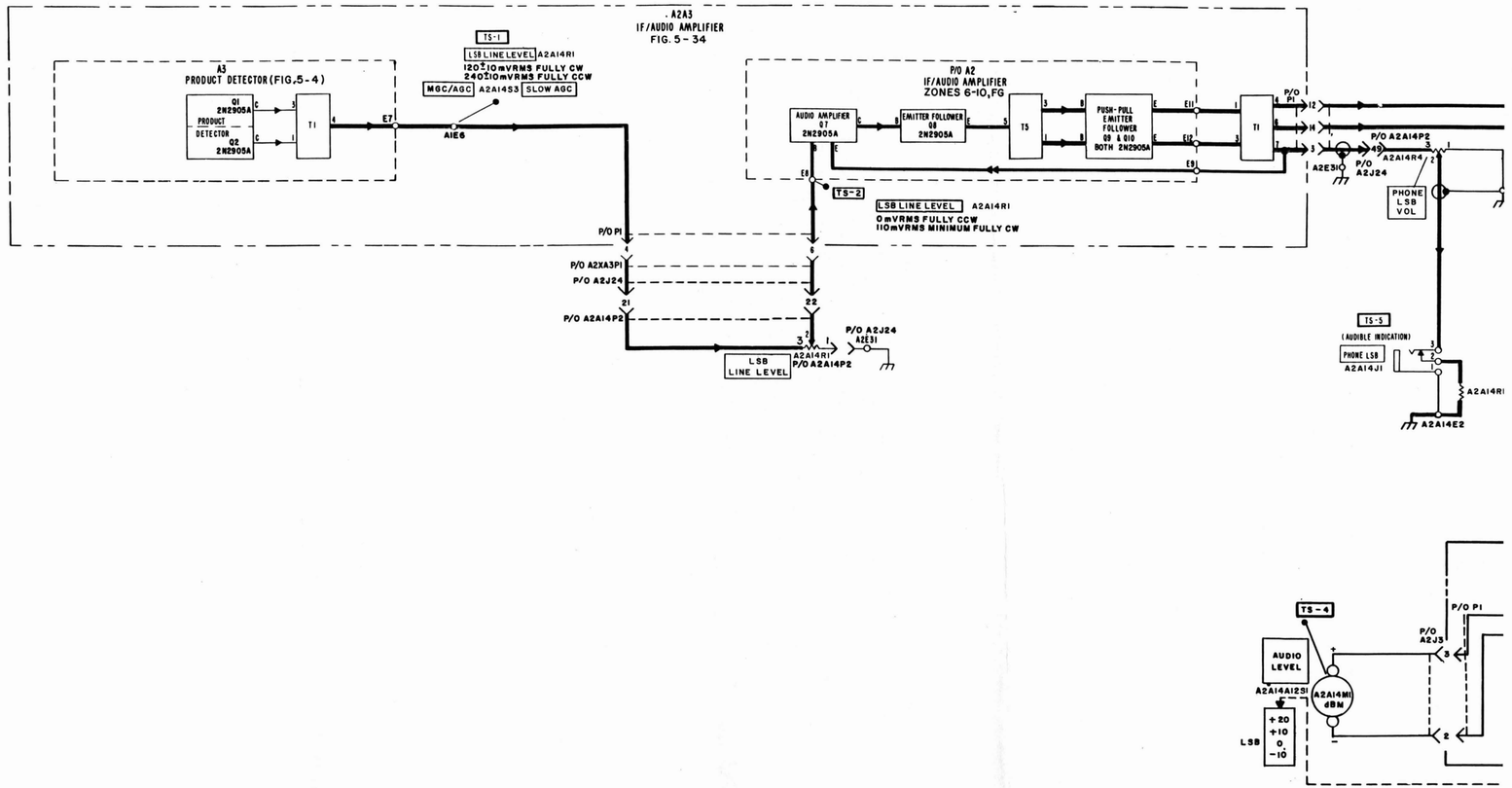

NOTES FOR FIGURE 5-7

GENERAL NOTES

A. TEST EQUIPMENT REQUIRED:
DIGITAL MULTIMETER 89536-8800A/AA OR EQUIVALENT
RF SIGNAL GENERATOR 28480-8660C WITH PLUG-INS 86601A AND 86632B OR EQUIVALENT
AMPLIFIER/MODE SELECTOR TEST FIXTURE TS-3670/WRC-1
EXTENDER CABLE 98738-30A226280-21-11 FOR IF/AUDIO AMPLIFIER ASSEMBLIES A2A2 AND A2A3.

B. THE INFORMATION CONTAINED IN THE FOLLOWING NOTES AND ON THE SIGNAL FLOW DIAGRAM IS ORGANIZED TO ALLOW TROUBLESHOOTING OF RECEIVER FUNCTIONS IN AN OPERATING R-1051H/URR RECEIVER. FOR DEPOT MAINTENANCE THE MODULE UNDER TEST WILL BE OPERATED IN AMPLIFIER MODE SELECTOR TEST FIXTURE TS-3670/WRC-1. THE SIGNAL LEVELS INDICATED ON THE SIGNAL FLOW DIAGRAMS SHALL BE USED TO GUIDE THE SETTINGS OF THE ASSOCIATED TEST GENERATORS. TEST FIXTURE CONTROL SETTINGS SHALL CORRESPOND TO THE SETTINGS OF THEIR COUNTERPART CONTROLS OF THE R-1051H/URR.

C. REFERENCES:
FUNCTIONAL DESCRIPTION, PARAGRAPH 3-60
MAINTENANCE SCHEMATIC, FIGURE 5-34
TROUBLESHOOTING SEQUENCE, FIGURE 5-25
CORRECTIVE MAINTENANCE, PARAGRAPH 6-56
PHYSICAL LOCATION OF TEST POINTS, FIGURES 7-11 THROUGH 7-13.

D. ⟶≀⟵ INDICATES BREAK POINTS USED TO REDUCE DIAGRAM CLUTTER. TO FIND MATING END OF BROKEN LINE PROCEED FROM BREAK POINT IN PARALLEL WITH DIAGRAM BORDER.

E. ⟶ INDICATES SIGNAL FLOW.

F. ⟵ DENOTES FEEDBACK.

SPECIFIC NOTES

1. PRELIMINARY SETUP. MAKE PRELIMINARY POWER AVAILABLE TO THE EQUIPMENT BY PLACING SYSTEM CIRCUIT BREAKER TO ON. LOOSEN FRONT PANEL SCREWS AND SLIDE CHASSIS/PANEL ASSEMBLY OUT OF CASE. DEFEAT INTERLOCK SWITCH A1A2S1 BY PULLING SHAFT OUT SO THAT PLUNGER EXTENDS FORWARD OF CASE. MAKE THE FOLLOWING PRELIMINARY CONTROL SETTINGS BEFORE BEGINNING THE TEST PROCEDURE:

UNIT	CONTROL	POSITION
RADIO RECEIVER R-1051H/URR	MODE SELECTOR SWITCH A2A14S2	STDBY
	FREQUENCY CONTROLS	2.100 MHZ

NOTES FOR FIGURE 5-7 (CONTINUED)

SPECIFIC NOTES (CONTINUED)

2. TEST SETUP:

   a. APPLY THE OUTPUT FROM THE RF SIGNAL GENERATOR TO THE RECEIVER ANT 50 OHMS JACK A1J23. SET THE RF SIGNAL GENERATOR OUTPUT FOR A FREQUENCY OF 2.101 MHZ, AT 500 UVRMS.

   b. REMOVE IF/AUDIO AMPLIFIER ASSEMBLIES A2A2 AND A2A3 FROM RECEIVER AND RECONNECT THEM VIA THE EXTENDER CABLES.

   c. LOOSEN SCREWS AND REMOVE COVERS FROM IF/AUDIO AMPLIFIERS.

3. THIS TEST PROCEDURE REQUIRES MAKING MEASUREMENTS AT EACH OF SIX TEST POINTS WITH THE MODE SELECTOR SWITCH A2A14S2 AT USB AND THE MGC/AGC SWITCH A2A14S3 IN EACH OF ITS THREE POSITIONS WHEN TESTING IF/AUDIO AMPLIFIER ASSEMBLY A2A2 (A TOTAL OF 18 MEASUREMENTS). THE ENTIRE PROCEDURE IS THEN REPEATED WITH THE MODE SELECTOR SWITCH A2A14S2 AT LSB WHEN TESTING IF/AUDIO AMPLIFIER ASSEMBLY A2A3. THE INPUT FREQUENCY FROM THE RF SIGNAL GENERATOR IS SET AT 2.101 MHZ FOR A2A2 AND AT 2.099 MHZ FOR A2A3. THE PROCEDURE GIVEN BELOW TESTS EACH TEST POINT INDIVIDUALLY ON BOTH ASSEMBLIES AND IN ALL POSITIONS OF MGC/AGC SWITCH A2A14S3. HOWEVER, IT MAY BE MORE CONVENIENT TO TEST EACH OF THE ASSEMBLIES SEPARATELY OR TO PERFORM THE TESTING IN ORDER BY THE POSITIONS OF MGC/AGC SWITCH A2A14S3. THEREFORE, THE ENTIRE TEST PROCEDURE IS SUMMARIZED IN THE CHART WHICH FOLLOWS THE TEST STEPS.

4. TEST STEPS:

TS-1 REFER TO NOTES 1, 2 AND 3 BEFORE PERFORMING TEST. SET MODE SELECTOR SWITCH A2A14S2 TO USB AND MGC/AGC SWITCH A2A14S3 CONSECUTIVELY TO MGC, SLOW, AND FAST. AT EACH POSITION, MEASURE DC CONTROL INPUT TO AGC/AUDIO AMPLIFIER AT A2A2A1E3 TO BE AS INDICATED. SET RF SIGNAL GENERATOR OUTPUT FOR 2.099 MHz. SET MODE SELECTOR SWITCH A2A14S2 TO LSB AND MGC/AGC SWITCH A2A14S3 CONSECUTIVELY TO MGC, SLOW, AND FAST. AT EACH POSITION, MEASURE DC CONTROL INPUT TO AGC/AUDIO AMPLIFIER AT A2A3A1E3 TO BE AS INDICATED.

TS-2 SET RF SIGNAL GENERATOR OUTPUT FOR 2.101 MHz. SET MODE SELECTOR SWITCH A2A14S2 TO USB AND MGC/AGC SWITCH A2A14S3 CONSECUTIVELY TO MGC, SLOW, AND FAST. AT EACH POSITION, MEASURE DC CONTROL INPUT TO AGC/AUDIO AMPLIFIER AT A2A2A1E10 TO BE AS INDICATED. SET RF SIGNAL GENERATOR OUTPUT FOR 2.099 MHz. SET MODE SELECTOR SWITCH A2A14S2 TO LSB AND MCG/AGC SWITCH A2A14S3 CONSECUTIVELY TO MGC, SLOW, AND FAST. AT EACH POSITION, MEASURE DC CONTROL INPUT TO AGC/AUDIO AMPLIFIER AT A2A3A1E10 TO BE AS INDICATED.

NOTES FOR FIGURE 5-7 (CONTINUED)

SPECIFIC NOTES (CONTINUED)

TS-3 SET RF SIGNAL GENERATOR OUTPUT FOR 2.101 MHZ. SET MODE SELECTOR SWITCH A2A14S2 TO USB AND MGC/AGC SWITCH A2A14S3 CONSECUTIVELY TO MGC, SLOW, AND FAST. AT EACH POSITION, MEASURE THE VOLTAGE LEVEL AT JUNCTION OF A2A2A1C12/R19 TO BE AS INDICATED. SET RF SIGNAL GENERATOR OUTPUT FOR 2.099 MHZ. SET MODE SELECTOR SWITCH A2A14S2 TO LSB AND MGC/AGC SWITCH A2A14S3 CONSECUTIVELY TO MGC, SLOW, AND FAST. AT EACH POSITION, MEASURE THE VOLTAGE LEVEL AT JUNCTION OF A2A2A1C12/R19 TO BE AS INDICATED.

TS-4 SET SIGNAL GENERATOR OUTPUT FOR 2.101 MHZ. SET MODE SELECTOR SWITCH A2A14S2 TO USB AND MGC/AGC SWITCH A2A14S3 CONSECUTIVELY TO MGC, SLOW, AND FAST. AT EACH POSITION MEASURE THE VOLTAGE LEVEL AT A2A2A1Q13 COLLECTOR TO BE AS INDICATED. SET RF SIGNAL GENERATOR OUTPUT FOR 2.099 MHZ. SET MODE SELECTOR SWITCH A2A14S2 TO LSB AND MGC/AGC SWITCH A2A14S3 CONSECUTIVELY TO MGC, SLOW, AND FAST. AT EACH POSITION, MEASURE THE VOLTAGE LEVEL AT A2A3A1Q13 COLLECTOR TO BE AS INDICATED.

TS-5 SET SIGNAL GENERATOR OUTPUT FOR 2.101 MHZ. SET MODE SELECTOR SWITCH A2A14S2 TO USB AND MGC/AGC SWITCH A2A14S3 CONSECUTIVELY TO MGC, SLOW, AND FAST. AT EACH POSITION MEASURE THE VOLTAGE LEVEL AT A2A2A1TP1 TO BE AS INDICATED. SET RF SIGNAL GENERATOR OUTPUT FOR 2.099 MHZ. SET MODE SELECTOR SWITCH A2A14S2 TO LSB AND MGC/AGC SWITCH A2A14S3 CONSECUTIVELY TO MGC, SLOW, AND FAST. AT EACH POSITION, MEASURE THE VOLTAGE LEVEL AT A2A3A1TP1 TO BE AS INDICATED.

CAUTION

OBSERVE NEGATIVE VOLTAGES AT TEST STEP TS-6.

TS-6 SET SIGNAL GENERATOR OUTPUT FOR 2.101 MHZ. SET MODE SELECTOR SWITCH A2A14S2 TO USB AND MGC/AGC SWITCH A2A14S3 CONSECUTIVELY TO MGC, SLOW, AND FAST. AT EACH POSITION, MEASURE THE USB IF/AUDIO AMPLIFIER OUTPUT LEVEL AT A2A2A1TP2 TO BE AS INDICATED. SET RF SIGNAL GENERATOR OUTPUT FOR 2.099 MHZ. SET MODE SELECTOR SWITCH A2A14S2 TO LSB AND MGC/AGC SWITCH A2A14S3 CONSECUTIVELY TO MGC, SLOW, AND FAST. AT EACH POSITION, MEASURE THE LSB IF/AUDIO AMPLIFIER OUTPUT LEVEL AT A2A3A1TP2 TO BE AS INDICATED.

NOTES FOR FIGURE 5-7 (CONTINUED)

AGC TEST MEASUREMENT SUMMARY CHART

WHEN TESTING ASSEMBLY A2A2, SET MODE SELECTOR SWITCH A2A14S2 TO USB AND SET RF SIGNAL GENERATOR OUTPUT FOR 2.101 MHZ. WHEN TESTING ASSEMBLY A2A3, SET MODE SELECTOR SWITCH A2A14S2 TO LSB AND SET RF SIGNAL GENERATOR OUTPUT FOR 2.099 MHZ.

TEST STEP	TEST POINT A2A2 OR A3A2	MGC/AGC SWITCH A2A14S3		
		MGC	SLOW	FAST AGC
TS-1	A1E3	0 V	+3.5 TO +4.5 V	+19 TO +21 V
TS-2	A1E10	+1.0 TO +2.0 V*	0 V	0 V
TS-3	A1C12 POS. END	0 V	+2.0 TO +3.1 V	+2.0 TO +3.1 V
TS-4	A1Q13 COLLECTOR	0 V	+19 TO +21 V	+19 TO +21 V
TS-5	A1TP1	+0.4 TO +1.3 V*	+0.8 TO +1.0 V	+0.8 TO +1.0 V
		CAUTION		
		OBSERVE NEGATIVE VOLTAGES AT TEST STEP TS-6		
TS-6	A1TP1	0 TO -23 V*	-6.8 TO -10.3 V	-6.8 TO 10.3 V

* VOLTAGE INDICATION VARIES BETWEEN THESE LIMITS FOR THE FULLY CLOCKWISE TO FULLY COUNTERCLOCKWISE POSITION OF GAIN CONTROL A2A14R3.

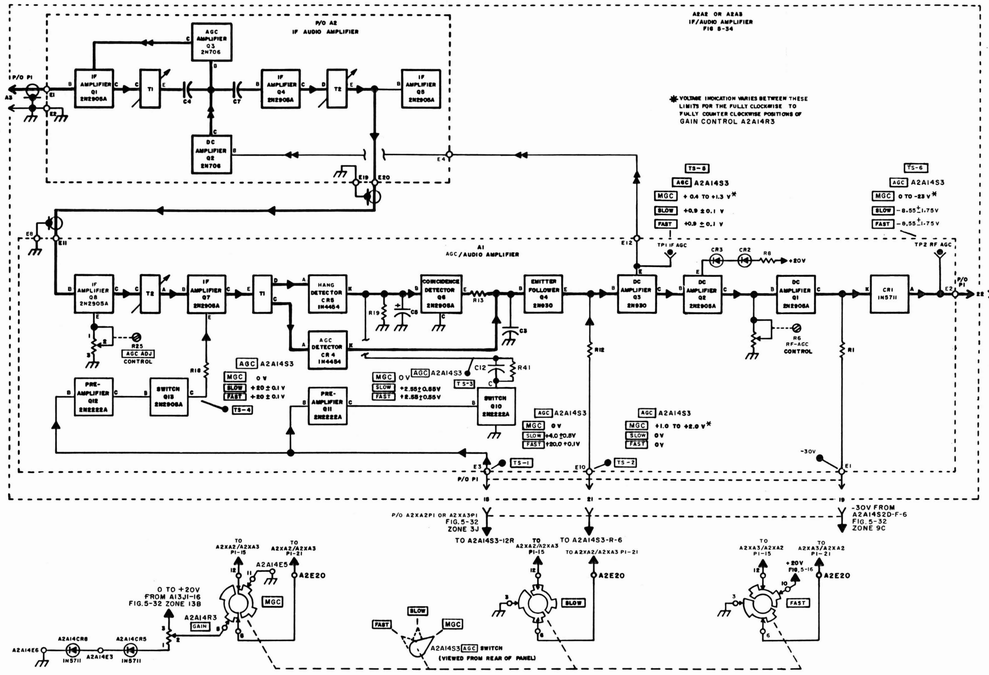

Figure 5-7. Manual/Automatic Gain Control, Signal Flow Diagram

NOTES FOR FIGURE 5-8

GENERAL NOTES

A. TEST EQUIPMENT REQUIRED:
DIGITAL MULTIMETER 89536-8800A/AA OR EQUIVALENT
RF MILLIVOLTMETER 04901-92B-S5 OR EQUIVALENT
RF SIGNAL GENERATOR 28480-8660C WITH PLUG-INS 86601A AND 86632B OR EQUIVALENT
AMPLIFIER/MODE SELECTOR TEST FIXTURE TS-3670/WRC-1
EARPHONE HEADSET NT-49985/A
EXTENDER CABLES 98738-30A226277-21-11 AND 98738-30A226426-21-11 FOR MODE SELECTOR ASSEMBLY A2A1
RESISTOR, 620 OHMS.

B. THE INFORMATION CONTAINED IN THE FOLLOWING NOTES AND ON THE SIGNAL FLOW DIAGRAM IS ORGANIZED TO ALLOW TROUBLESHOOTING OF RECEIVER FUNCTIONS IN AN OPERATING R-1051H/URR RECEIVER. FOR DEPOT MAINTENANCE THE MODULE UNDER TEST WILL BE OPERATED IN AMPLIFIER/MODE SELECTOR TEST FIXTURE TS-3670/WRC-1. THE SIGNAL LEVELS INDICATED ON THE SIGNAL FLOW DIAGRAMS SHALL BE USED TO GUIDE THE SETTINGS OF THE ASSOCIATED TEST GENERATORS. TEST FIXTURE CONTROL SETTINGS SHALL CORRESPOND TO THE SETTINGS OF THEIR COUNTERPART CONTROLS OF THE R-1051H/URR.

C. REFERENCES:
FUNCTIONAL DESCRIPTION, PARAGRAPH 3-58
MAINTENANCE SCHEMATIC, FIGURE 5-33
TROUBLESHOOTING SEQUENCE, FIGURE 5-26
CORRECTIVE MAINTENANCE, PARAGRAPH 6-45
PHYSICAL LOCATION OF TEST POINTS, FIGURES 7-7 AND 7-10.

D. ⟶⟷⟵ INDICATES BREAK POINTS USED TO REDUCE DIAGRAM CLUTTER. TO FIND MATING END OF BROKEN LINE PROCEED FROM BREAK POINT IN PARALLEL WITH DIAGRAM BORDER.

E. ⟶ INDICATES SIGNAL FLOW.

SPECIFIC NOTES

1. PRELIMINARY SETUP. MAKE PRIMARY POWER AVAILABLE TO THE EQUIPMENT BY PLACING SYSTEM CIRCUIT BREAKER TO ON. LOOSEN FRONT PANEL SCREWS AND SLIDE CHASSIS/PANEL ASSEMBLY OUT OF CASE. DEFEAT INTERLOCK SWITCH A1A2S1 BY PULLING SHAFT OUT SO THAT PLUNGER EXTENDS FORWARD OF CASE. MAKE THE FOLLOWING PRELIMINARY CONTROL SETTINGS BEFORE BEGINNING THE TEST PROCEDURE:

UNIT	CONTROL	POSITION
RADIO RECEIVER R-1051H/URR	MODE SELECTOR SWITCH A2A14S2	STDBY
	MGC/AGC SWITCH A2A14S3	SLOW
	Hz SWITCH A2A14A11S1	000
	FREQUENCY CONTROLS	2.100 MHZ

NOTES FOR FIGURE 5-8 (CONTINUED)

SPECIFIC NOTES (CONTINUED)

2. TEST SETUP:

   a. REMOVE MODE SLECTOR ASSEMBLY A2A1 FROM RECEIVER AND RECONNECT IT VIA EXTENDER CABLES.

   b. LOOSEN SCREWS AND REMOVE COVER OF MODE SELECTOR.

   c. CONNECT A 620 OHM RESISTOR ACROSS PINS A AND B OF USB AUDIO OUT JACK A1A1J5

3. TEST STEPS:

TS-1 REFER TO NOTES 1 AND 2 BEFORE PERFORMING TEST. SET MODE SELECTOR SWITCH A2A14S2 TO CW. USING MULTIMETER, MEASURE THE BFO FREQUENCY CONTROL VOLTAGE FROM BFO CONTROL A2A14R6 AT A2A1A3E1 WITH A2A14R6 SET FULLY COUNTERCLOCKWISE AND THEN FULLY CLOCKWISE. THE VOLTAGE INDICATIONS SHOULD BE WITHIN THE LEVELS SHOWN.

TS-2 USING RF MILLIVOLTMETER, MEASURE THE BFO OUTPUT VOLTAGE AT THE EMITTER OF VARIABLE FREQUENCY BFO A2A1A3Q1 TO BE AS INDICATED.

TS-3 USING RF MILLIVOLTMETER, MEASURE THE BFO OUTPUT LEVEL FROM THE OUTPUT OF BUFFER AMPLIFIER A2A1A3Q3 TO BE AS INDICATED AT A2A1A3TP1.

CONNECT RF SIGNAL GENERATOR TO ANT 50 OHMS JACK A1J23, AND ADJUST THE OUTPUT FOR A FREQUENCY OF 2.100 MHZ, AT 500 UVRMS. CONNECT HEADSET TO PHONE USB JACK A2A14J2. WITH THE USB LINE LEVEL CONTROL A2A14R2 AT MIDRANGE AND PHONE USB VOL CONTROL A2A14R5 AT THE FULLY COUNTERCLOCKWISE POSITION, ADJUST A2A15R5 SLOWLY CLOCKWISE UNTIL THE AUDIO LEVEL IS COMFORTABLE, THEN VARY BFO CONTROL A2A14R6. AN AUDIBLE TONE SHOULD BE HEARD IN THE EARPHONES WITH A ZERO BEAT NEAR THE MIDRANGE OF BFO CONTROL A2A14R6.

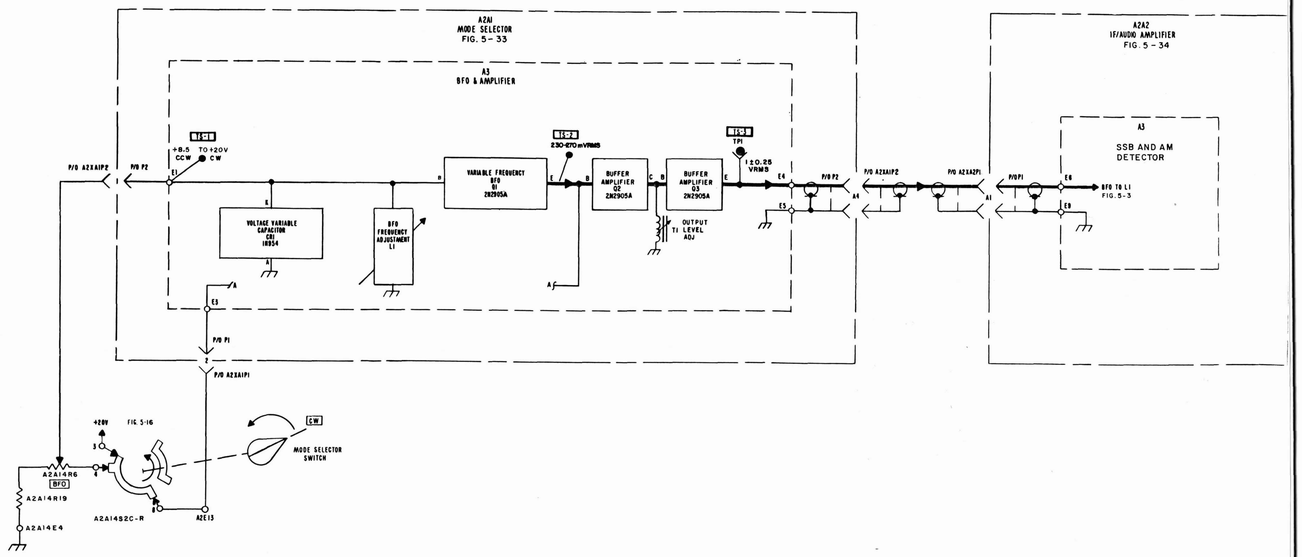

Figure 5-8. Beat Frequency Oscillator, Signal Flow Diagram

NOTES FOR FIGURE 5-9

GENERAL NOTES

A. THESE PROCEDURES ARE AUTHORIZED FOR ACCOMPLISHMENT BY DEPOT-LEVEL ACTIVITIES ONLY.

B. TEST EQUIPMENT REQUIRED:
FREQUENCY STANDARD TEST FIXTURE TS-3667/WRC-1
OSCILLOSCOPE 80009-465M
FREQUENCY STANDARD AN/URQ-23
DIGITAL MULTIMETER 89536-8800A/AA, OR EQUIVALENT
RF MILLIVOLTMETER 04901-92B-S5 OR EQUIVALENT
RF SIGNAL GENERATOR 28480-8660C WITH PLUG-INS 86601A AND 86632B
ELECTRONIC COUNTER 28480-5328A-H99 OR EQUIVALENT.

C. REFERENCES:
FUNCTIONAL DESCRIPTION, PARAGRAPH 3-71
MAINTENANCE SCHEMATIC DIAGRAM, FIGURE 5-36
TROUBLESHOOTING SEQUENCE, FIGURE 5-27
CORRECTIVE MAINTENANCE, PARAGRAPH 6-77
PHYSICAL LOCATION OF TEST POINTS, FIGURES 7-61 THROUGH 7-64.

D. ——≀≀—— INDICATES BREAK POINTS USED TO REDUCE DIAGRAM CLUTTER. TO FIND MATING END OF BROKEN LINE PROCEED FROM BREAK POINT IN PARALLEL WITH DIAGRAM BORDER.

E. ——▶—— INDICATES SIGNAL FLOW.

F. ——◀◀—— INDICATES FEEDBACK.

SPECIFIC NOTES

1. PRELIMINARY SETUP. PLACE FREQUENCY STANDARD ASSEMBLY A2A5 ON TEST FIXTURE. APPLY POWER, SET POWER SWITCH TO OVEN. SET RF LOAD SELECT SWITCH TO LOAD. ALLOW 1 HOUR MINIMUM TIME FOR STANDARD FREQUENCY OSCILLATOR TEMPERATURE TO STABILIZE. SET POWER SWITCH TO OPERATE.

2. TEST SETUP:

   a. CONNECT OSCILLOSCOPE TO SCOPE CONNECTOR ON REAR PANEL OF TEST FIXTURE.

   b. CONNECT RF MILLIVOLTMETER TO RFVTVM CONNECTOR ON REAR PANEL OF TEST FIXTURE.

   c. CONNECT ELECTRONIC COUNTER TO COUNTER CONNECTOR ON REAR PANEL OF TEST FIXTURE.

   d. CONNECT 5 MHZ FREQUENCY STANDARD TO EXTERNAL 5 MHZ INPUT CONNECTOR ON REAR PANEL OF TEST FIXTURE.

   e. SET SERVICE PROBE SELECT SWITCH TO OFF.

NOTES FOR FIGURE 5-9 (CONTINUED)

SPECIFIC NOTES (CONTINUED)

3. TEST STEPS:

TS-1 SET FREQUENCY OUTPUT SELECT SWITCH TO INT 5 MHZ. OBSERVE SINE WAVE. COUNTER READING AND RF MILLIVOLTMETER READING SHOULD BE AS INDICATED.

TS-2 SET FREQUENCY OUTPUT SELECT SWITCH TO 1 MHZ. OBSERVE SINE WAVE. COUNTER READING AND RF MILLIVOLTMETER READING SHOULD BE AS INDICATED.

TS-3 SET FREQUENCY OUTPUT SELECT SWITCH TO 500 KHZ (A1). OBSERVE SINE WAVE. COUNTER READING AND RF MILLIVOLTMETER READING SHOULD BE AS INDICATED.

TS-4 SET FREQUENCY OUTPUT SELECT SWITCH TO 500 KHZ (A2). OBSERVE SINEWAVE. COUNTER READING AND RF MILLIVOLTMETER READING SHOULD BE AS INDICATED.

TS-5 SET SELECTOR SWITCH TO 10 MHZ. OBSERVE SINE WAVE. COUNTER READING AND RF MILLIVOLTMETER READING SHOULD BE AS INDICATED.

TS-6 DISCONNECT EXTERNAL FREQUENCY STANDARD FROM REAR PANEL OF TEST FIXTURE AND CONNECT RF SIGNAL GENERATOR IN ITS PLACE. SET FREQUENCY OF RF SIGNAL GENERATOR TO APPROXIMATELY 5.0001 MHZ AT A MINIMUM OUTPUT LEVEL OF 1 VOLT.

SET FREQUENCY OUTPUT SELECT SWITCH TO INT 5 MHZ. COUNTER WILL INDICATE THE SIGNAL GENERATOR FREQUENCY. WHILE OBSERVING COUNTER, TURN EXT 5 MHZ LEVEL ADJUST CONTROL ON TEST FIXTURE DOWN AS FAR AS IT WILL GO. COUNTER WILL INDICATE A FREQUENCY SHIFT, CONFIRMING THAT INTERNAL OSCILLATOR HAS BEEN SELECTED.

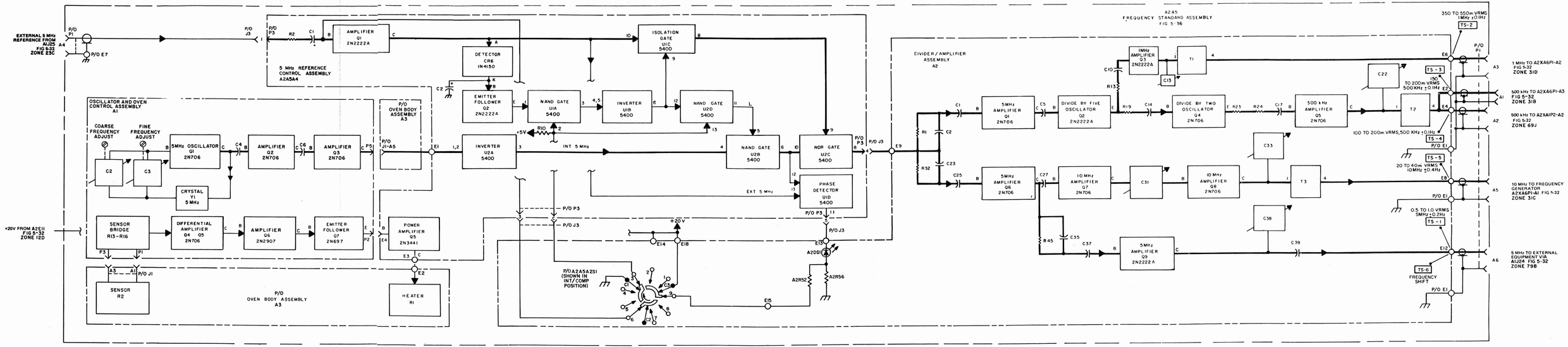

Figure 5-9. Standard Frequency Generation and Distribution, Signal Flow Diagram

NOTES FOR FIGURE 5-10

GENERAL NOTES

A. THESE PROCEDURES ARE AUTHORIZED FOR ACCOMPLISHMENT BY DEPOT-LEVEL ACTIVITIES ONLY.

B. TEST EQUIPMENT REQUIRED:
TRANSLATOR/SYNTHESIZER TEST FIXTURE TS-3665/WRC-1
OSCILLOSCOPE 80009-465M OR EQUIVALENT
DIGITAL MULTIMETER 89536-8800A/AA OR EQUIVALENT
FREQUENCY STANDARD AN/URQ-23
DIGITAL MULTIMETER 89536-8800A/AA
SPECTRUM ANALYZER 28480-8553B-E03 WITH AC PROBE 28480-1121A.

C. REFERENCES:
FUNCTIONAL DESCRIPTION, PARAGRAPH 3-96
MAINTENANCE SCHEMATIC, FIGURES 5-39 AND 5-40
TROUBLESHOOTING SEQUENCE, FIGURE 5-28
CORRECTIVE MAINTENANCE, PARAGRAPH 6-88
PHYSICAL LOCATION OF TEST POINTS, FIGURES 7-68 AND 7-69.

D. ——≀≀—— INDICATES BREAK POINTS USED TO REDUCE DIAGRAM CLUTTER. TO FIND MATING END OF BROKEN LINE PROCEED FROM BREAK POINT IN PARALLEL WITH DIAGRAM BORDER.

E. ——▶—— INDICATES SIGNAL FLOW.

F. ——◀◀—— INDICATES FEEDBACK.

SPECIFIC NOTES

1. FUNCTION TABLE FOR A2A6A13U9 FOLLOWS. A2A6A13U9 IS PROGRAMMED ONLY FOR THE LISTED INPUT CODES. THE 0 STATE IS A LOGIC LOW (0.0 TO 0.4V); THE 1 STATE IS A LOGIC HIGH (2.4 TO 5.0V).

INJECTION FREQUENCY (MHz)	MHz CONTROL SETTINGS	INPUT PIN					OUTPUT PIN							
		14	13	12	11	10	9	7	6	5	4	3	2	1
2.5	22	0	1	1	1	1	1	1	1	0	0	0	1	0
3.5	16,23,26	1	0	0	0	0	1	1	0	0	0	1	1	0
4.5	15,25	1	0	0	1	1	1	0	1	0	1	0	1	0
5.5	14,24	1	0	0	0	1	1	0	0	0	1	1	1	0
7.5	12,27	0	0	1	1	1	1	1	0	0	0	0	0	1
8.5	11,21,28	0	0	0	1	1	1	0	1	0	1	1	0	1
9.5	20,29	0	0	0	0	1	1	0	1	0	0	1	0	1
10.5	19	1	1	0	0	0	1	0	0	1	0	0	0	1
11.5	08,18	0	1	1	0	0	1	0	0	0	1	0	0	1
12.5	07,17	0	0	1	1	0	1	0	0	0	0	0	0	1
14.5	05	0	1	0	0	1	0	1	0	0	0	1	1	1

NOTES FOR FIGURE 5-10 (CONTINUED)

SPECIFIC NOTES (CONTINUED)

1. (CONTINUED)

INJECTION FREQUENCY (MHZ)	MHZ CONTROL SETTINGS	INPUT PIN					OUTPUT PIN							
		14	13	12	11	10	9	7	6	5	4	3	2	1
15.5	04	0	0	1	0	0	0	1	0	0	0	0	1	1
16.5	03,13	0	0	0	1	0	0	0	1	1	0	0	1	1
17.5	02	0	1	0	0	0	0	0	1	0	1	1	1	1
19.5	10	1	0	1	0	0	0	0	1	0	0	1	1	1
20.5	09	1	1	0	1	0	0	0	1	0	0	0	1	1
23.5	06	1	1	1	0	1	0	0	0	0	1	0	1	1

2. PRELIMINARY SETUP. PLACE TRANSLATOR/SYNTHESIZER ASSEMBLY A2A6 ON TEST FIXTURE, AND REMOVE COVER FROM ASSEMBLY. PREPARE THE TEST FIXTURE BY SETTING ITS CONTROLS TO TEST A WRC-1 100 HZ TYPE MODULE IN THE RECEIVE MODE, WITHOUT VERNIER ACTION, AND A NORMAL 20V LEVEL. SET TEST FIXTURE FREQUENCY CONTROLS FOR 8.0000 MHz OPERATION, BUT DO NOT APPLY POWER TO TEST FIXTURE.

3. TEST SETUP:

   a. CONNECT DIGITAL MULTIMETER TO APPROPRIATE CONNECTOR ON TEST FIXTURE FRONT PANEL.

   b. CONNECT FREQUENCY STANDARD AN/URQ-23 5 MHZ OUTPUT TO EXT 5 MHZ INPUT CONNECTOR ON REAR OF TEST FIXTURE.

4. PRELIMINARY CHECK:

   a. SET METER INPUT SELECTOR FOR +20V AND APPLY POWER. METER SHOULD INDICATE +19 TO +21 V.

   b. DISCONNECT DIGITAL MULTIMETER.

5. THIS TEST PROCEDURE CONSISTS OF SETTING THE TEST FIXTURE FREQUENCY CONTROLS CONSECUTIVELY TO (A) 8 MHZ, (B) 16 MHZ AND (C) 9 MHZ AND AT EACH FREQUENCY SETTING PERFORMING TESTS TS-1 THROUGH TS-8. TWO ADDITIONAL TESTS, TS-9 AND TS-10, ARE PERFORMED AT 8 MHZ ONLY (A TOTAL OF 26 MEASUREMENTS). FOR CLARITY THE ENTIRE TEST IS SUMMARIZED IN THE SYNTHESIZER MEASUREMENT SUMMARY CHART WHICH FOLLOWS THE TEST STEPS. MEASURE ALL FREQUENCIES WITH SPECTRUM ANALYZER.

6. TEST STEPS:

   TS-1 REFER TO NOTES 2, 3, 4, AND 5 BEFORE PERFORMING TEST. SET TEST FIXTURE FREQUENCY CONTROLS TO 8.0000 MHZ AND OBSERVE WAVEFORM J AT A2A6A14TP5. FREQUENCY AND AMPLITUDE SHOULD BE AS INDICATED (A).

NOTES FOR FIGURE 5-10 (CONTINUED)

SPECIFIC NOTES (CONTINUED)

TS-2 MEASURE THE VOLTAGE AT A2A6A14TP3. VOLTAGE SHOULD BE AS INDICATED (A).

TS-3 MEASURE THE VOLTAGE AT A2A6A14TP6. VOLTAGE SHOULD BE AS INDICATED (A).

TS-4 MEASURE THE VOLTAGE AT A2A6A14TP1. VOLTAGE SHOULD BE AS INDICATED (A).

TS-5 OBSERVE SIGNAL AT A2A6A14TP4. FREQUENCY AND AMPLITUDE SHOULD BE AS INDICATED (A).

TS-6 OBSERVE SIGNAL AT A2A6A14TP2. FREQUENCY AND AMPLITUDE SHOULD BE AS INDICATED (A).

TS-7 OBSERVE SIGNAL AT A2A6A14TP7. FREQUENCY AND AMPLITUDE SHOULD BE AS INDICATED (A).

TS-8 OBSERVE WAVEFORM I AT A2A6A13TP2. FREQUENCY AND AMPLITUDE SHOULD BE AS INDICATED (A). (WAVESHAPE VARIES WITH FREQUENCY).

TS-9 OBSERVE WAVEFORM G AT A2A6A13TP1. FREQUENCY AND AMPLITUDE SHOULD BE AS INDICATED.

TS-10 OBSERVE WAVEFORM H AT A2A6A13TP3. FREQUENCY AND AMPLITUDE SHOULD BE AS INDICATED.

SET TEST FIXTURE FREQUENCY CONTROLS TO 16.0000 MHZ AND REPEAT TESTS TS-1 THROUGH TS-8. MEASUREMENT RESULTS SHOULD BE AS INDICATED (B).

SET TEST FIXTURE FREQUENCY CONTROLS TO 9.0000 MHZ AND REPEAT TESTS TS-1 THROUGH TS-8. MEASUREMENT RESULTS SHOULD BE AS INDICATED (C).

NOTES FOR FIGURE 5-10 (CONTINUED)

SPECIFIC NOTES (CONTINUED)

10 MHZ/1 MHZ SYNTHESIZER MEASUREMENT SUMMARY CHART

TEST STEP	TEST POINT A2A6-	TEST SET FREQUENCY CONTROLS		
		(A) 8.0000 MHZ	(B) 16.0000 MHZ	(C) 9.0000 MHZ
TS-1	A14TP5	WAVEFORM J 11.5 MHZ 200 MV P-P	WAVEFORM J 3.5 MHZ 200 MV P-P	WAVEFORM J 20.5 MHZ 200 MV P-P
TS-2	A14TP3	+0.4V OR LOWER	+5V	+5V
TS-3	A14TP6	+5V	+5V	+0.4V OR LOWER
TS-4	A14TP1	+5V	+0.4V OR LOWER	+5V
TS-5	A14TP4	SQUARE WAVE 11.5 MHz 800 MV P-P	NO SIGNAL (LESS THAN 200 MV P-P)	NO SIGNAL (LESS THAN 200 MV P-P)
TS-6	A14TP2	NO SIGNAL (LESS THAN 200 MV P-P)	SQUARE WAVE 3.5 MHZ 800 MV P-P	NO SIGNAL (LESS THAN 200 MV P-P)
TS-7	A14TP7	NO SIGNAL (LESS THAN 200 MV P-P)	NO SIGNAL (LESS THAN 200 MV P-P)	SQUARE WAVE 20.5 MHZ 800 MV P-P
TS-8	A13TP2	WAVEFORM I 23 MHZ 4 V P-P	WAVEFORM I 14 MHZ 4 V P-P	WAVEFORM I 20.5 MHZ 4 V P-P
TS-9	A13TP1	WAVEFORM G 500 KHZ 4 V P-P		
TS-10	A13TP3	WAVEFORM H 500 KHZ 4 V P-P		

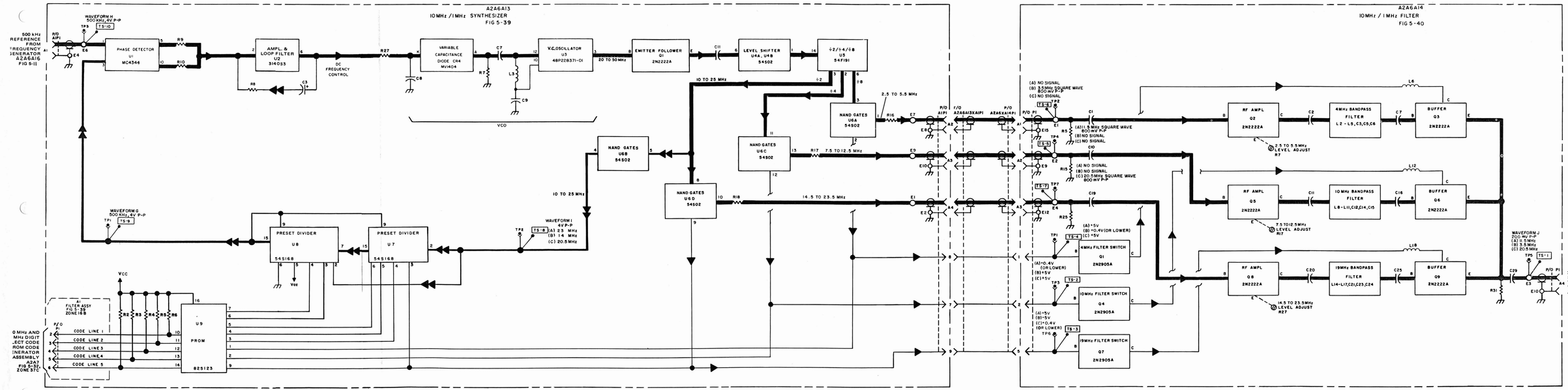

Figure 5-10: 10 MHz/1 MHz Synthesizer A2A6A13 and Filter Subassembly A2A6A14, Signal Flow Diagram

NOTES FOR FIGURE 5-11

GENERAL NOTES

A. THESE PROCEDURES ARE AUTHORIZED FOR ACCOMPLISHMENT BY DEPOT-LEVEL ACTIVITIES ONLY.

B. TEST EQUIPMENT REQUIRED:
TRANSLATOR/SYNTHESIZER TEST FIXTURE TS-3665/WRC-1
EXTENDER BOARD 98738-01A228396-01 FOR FREQUENCY GENERATOR A2A6A16
OSCILLOSCOPE 80009-465M OR EQUIVALENT
FREQUENCY STANDARD AN/URQ-23
DIGITAL MULTIMETER 89536-8800A/AA
RF MILLIVOLTMETER 04901-92B-S5 OR EQUIVALENT
ELECTRONIC COUNTER 28480-5328A-H99.

C. REFERENCES:
FUNCTIONAL DESCRIPTION, PARAGRAPH 3-85
MAINTENANCE SCHEMATIC, FIGURE 5-42
TROUBLESHOOTING SEQUENCE, FIGURE 5-29
CORRECTIVE MAINTENANCE, PARAGRAPH 6-88
PHYSICAL LOCATION OF TEST POINTS, FIGURE 7-71
WAVEFORMS TABLE 6-6.

D. ——≀≀—— INDICATES BREAK POINTS USED TO REDUCE DIAGRAM CLUTTER. TO FIND MATING END OF BROKEN LINE PROCEED FROM BREAK POINT IN PARALLEL WITH DIAGRAM BORDER.

E. ——▶—— INDICATES SIGNAL FLOW.

F. ——◀◀—— DENOTES FEEDBACK.

G. THE LOGIC HIGH STATE IS 2.4 TO 5.0 V. THE LOGIC LOW STATE IS 0.0 TO 0.4 V.

H. FREQUENCIES INDICATED WHEN IN VERNIER ARE APPROXIMATE AND ARE DEPENDENT ON SETTING OF VERNIER CONTROL.

SPECIFIC NOTES

1. PRELIMINARY SETUP. PLACE TRANSLATOR/SYNTHESIZER ASSEMBLY A2A6 ON TEST FIXTURE. REMOVE COVER FROM ASSEMBLY. RELEASE LATCHES AND REMOVE FREQUENCY GENERATOR SUBASSEMBLY A2A6A16. PLACE EXTENDER BOARD IN A2A6A16 LOCATION AND MATE CONNECTOR A2A6A16P1 WITH CONNECTOR ON EXTENDER BOARD. PREPARE THE TEST FIXTURE BY SETTING ITS CONTROLS TO TEST A WRC-1 100 HZ TYPE MODULE IN THE RECEIVE MODE, WITHOUT VERNIER ACTION, AND A NORMAL 20 V LEVEL. DO NOT APPLY POWER TO TEST FIXTURE.

2. TEST SETUP:

   a. CONNECT DIGITAL MULTIMETER TO APPROPRIATE CONNECTOR ON TEST FIXTURE FRONT PANEL.

NOTES FOR FIGURE 5-11 (CONTINUED)

SPECIFIC NOTES (CONTINUED)

b. CONNECT FREQUENCY STANDARD AN/URQ-23 5 MHZ OUTPUT TO EXT 5 MHZ INPUT CONNECTOR ON REAR OF TEST FIXTURE.

3. PRELIMINARY CHECK:

a. SET METER OUTPUT SELECTOR TO +20 V AND APPLY POWER. METER SHOULD INDICATE +19 TO +21 V.

b. DISCONNECT DIGITAL MULTIMETER.

4. TEST STEPS:

TS-1 REFER TO NOTES 1, 2 AND 3 BEFORE PERFORMING TEST. CONNECT RF MILLIVOLTMETER TO A2A6A16E1 AND BY MEANS OF 10 MHZ LEVEL CONTROL ON TEST FIXTURE ADJUST FOR AN INPUT LEVEL OF 30 MVRMS.

TS-2 OBSERVE WAVEFORM C AT A2A6A16TP4. FREQUENCY AND AMPLITUDE TO BE AS INDICATED.

TS-3 OBSERVE WAVEFORM B AT A2A6A16TP3. FREQUENCY AND AMPLITUDE TO BE AS INDICATED.

TS-4 WITH VERNIER DISABLED, OBSERVE WAVEFORM A AT A2A6A16TP2. FREQUENCY AND AMPLITUDE TO BE AS INDICATED.

TS-5 OBSERVE SQUARE WAVE AT A2A6A16Q2 COLLECTOR. FREQUENCY AND AMPLITUDE TO BE AS INDICATED.

TS-6 OBSERVE SQUAREWAVE AT A2A6A16U1-12. FREQUENCY AND AMPLITUDE TO BE AS INDICATED.

TS-7 OBSERVE WAVEFORM A AT A2A6A16U4B-12. FREQUENCY AND AMPLITUDE TO BE AS INDICATED.

TS-8 MEASURE THE VOLTAGE AT A2A6A16R12 TO BE AS INDICATED.

TS-9 MEASURE THE VOLTAGE AT A2A6A16U4B-13 TO BE AS INDICATED.

TS-10 MEASURE THE VOLTAGE AT A2A6A16U4A-8 TO BE AS INDICATED.

TS-11 SET TEST FIXTURE CONTROLS TO TEST WITH VERNIER ACTION. OPERATE VERNIER ADJUST CONTROL FROM FULLY CCW TO FULLY CW. MEASURE VARIABLE VOLTAGE TO BE AS INDICATED AT A2A6A16TP1. SET VERNIER ADJUST CONTROL FOR 17 KHZ AT A2A6A16U8-6.

TS-12 OBSERVE SQUARE WAVE AT A2A6A16U9-3. FREQUENCY AND AMPLITUDE TO BE AS INDICATED.

NOTES FOR FIGURE 5-11 (CONTINUED)

SPECIFIC NOTES (CONTINUED)

TS-13 OBSERVE SINE WAVE AT A2A6A16Q5 BASE. FREQUENCY AND AMPLITUDE TO BE AS INDICATED.

TS-14 OBSERVE SINE WAVE AT A2A6A16U12A-1. FREQUENCY AND AMPLITUDE TO BE AS INDICATED.

TS-15 OBSERVE SQUARE WAVE AT A2A6A16U12D-12 FREQUENCY AND AMPLITUDE TO BE AS INDICATED.

TS-16 OBSERVE WAVEFORM A AT A2A6A16U5B-8. FREQUENCY AND AMPLITUDE TO BE AS INDICATED.

TS-17 OBSERVE SQUARE WAVE AT A2A6A16U13-3. FREQUENCY AND AMPLITUDE TO BE AS INDICATED.

TS-18 OBSERVE SQUARE WAVE AT A2A6A16U9-1. FREQUENCY AND AMPLITUDE TO BE AS INDICATED.

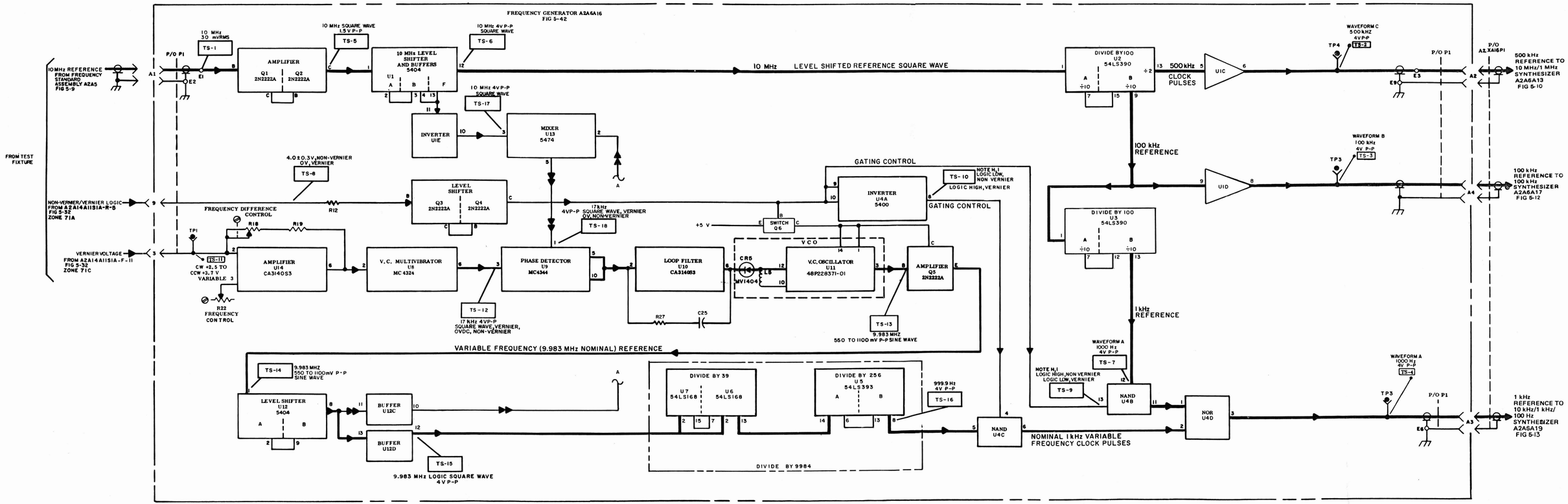

Figure 5-11. Frequency Generator A2A6A16, Signal Flow Diagram

NOTES FOR FIGURE 5-12

GENERAL NOTES

A. THESE PROCEDURES ARE AUTHORIZED FOR ACCOMPLISHMENT BY DEPOT-LEVEL ACTIVITIES ONLY.

B. TEST EQUIPMENT REQUIRED:
TRANSLATOR/SYNTHESIZER TEST FIXTURE TS-3665/WRC-1
OSCILLOSCOPE 80009-465M OR EQUIVALENT
DIGITAL MULTIMETER 89536-8800A/AA OR EQUIVALENT
FREQUENCY STANDARD AN/URQ-23
ELECTRONIC COUNTER 28480-5328A-H99 OR EQUIVALENT.

C. REFERENCES:
FUNCTIONAL DESCRIPTION, PARAGRAPH 3-92
TROUBLESHOOTING SEQUENCE, FIGURE 5-30
CORRECTIVE MAINTENANCE, PARAGRAPH 6-88
PHYSICAL LOCATION OF TEST POINTS, FIGURE 7-72
MAINTENANCE SCHEMATIC, FIGURE 5-43
WAVEFORMS, TABLE 6-6.

D. ——≀≀—— INDICATES BREAK POINTS USED TO REDUCE DIAGRAM CLUTTER. TO FIND MATING END OF BROKEN LINE PROCEED FROM BREAK POINT IN PARALLEL WITH DIAGRAM BORDER.

E. ——▶—— INDICATES SIGNAL FLOW.

F. ——◀◀—— INDICATES FEEDBACK.

SPECIFIC NOTES

1. FUNCTION TABLE FOR A2A6A17U3. THE 0 STATE IS A LOGIC LOW; THE 1 STATE IS A LOGIC HIGH.

100 kHz	PRESET INPUT COUNT	BIT	2^3	2^2	2^1	2^0
		DATA PIN	9	10	1	15
		OUTPUT PIN (NOT USED)	7	6	2	3
0	4		1	0	0	1
1	5		1	0	0	0
2	6		0	1	1	1
3	7		0	1	1	0
4	8		0	1	0	1
5	9		0	1	0	0
6	0		0	0	1	1
7	1		0	0	1	0
8	2		0	0	0	1
9	3		0	0	0	0

NOTES FOR FIGURE 5-12 (CONTINUED)

SPECIFIC NOTES (CONTINUED)

2. PRELIMINARY SETUP. PLACE TRANSLATOR/SYNTHESIZER ASSEMBLY A2A6 ON TEST FIXTURE AND REMOVE COVER FROM ASSEMBLY. PREPARE THE TEST FIXTURE BY SETTING ITS CONTROLS TO TEST A WRC-1 100 HZ TYPE MODULE IN THE RECEIVE MODE, WITHOUT VERNIER ACTION, AND A NORMAL 20 V LEVEL. SET TEST FIXTURE FREQUENCY CONTROLS FOR 2.0011 MHZ OPERATION BUT DO NOT APPLY POWER TO TEST FIXTURE.

3. TEST SETUP:

   a. CONNECT DIGITAL MULTIMETER TO APPROPRIATE CONNECTOR ON TEST FIXTURE FRONT PANEL.

   b. CONNECT FREQUENCY STANDARD AN/URQ-23 5 MHZ OUTPUT TO EXT 5 MHZ INPUT ON CONNECTOR ON REAR OF TEST FIXTURE.

4. PRELIMINARY CHECK:

   a. SET METER OUTPUT SELECTOR TO +20 V AND APPLY POWER. METER SHOULD INDICATE +19 TO +21 V.

   b. DISCONNECT DIGITAL MULTIMETER.

5. TEST STEPS:

   TS-1 OBSERVE WAVEFORM E AT A2A6A17TP3. FREQUENCY AND AMPLITUDE SHOULD BE AS INDICATED.

   TS-2 OBSERVE WAVEFORM B AT A2A6A17TP1. FREQUENCY AND AMPLITUDE SHOULD BE AS INDICATED.

   TS-3 OBSERVE WAVEFORM D AT A2A6A17TP2. FREQUENCY AND AMPLITUDE SHOULD BE AS INDICATED.

   TS-4 SET TEST FIXTURE FREQUENCY CONTROLS FOR 6.0011 MHZ OPERATION. OBSERVE WAVEFORM E AT A2A6A17TP3. FREQUENCY AND AMPLITUDE TO BE AS INDICATED.

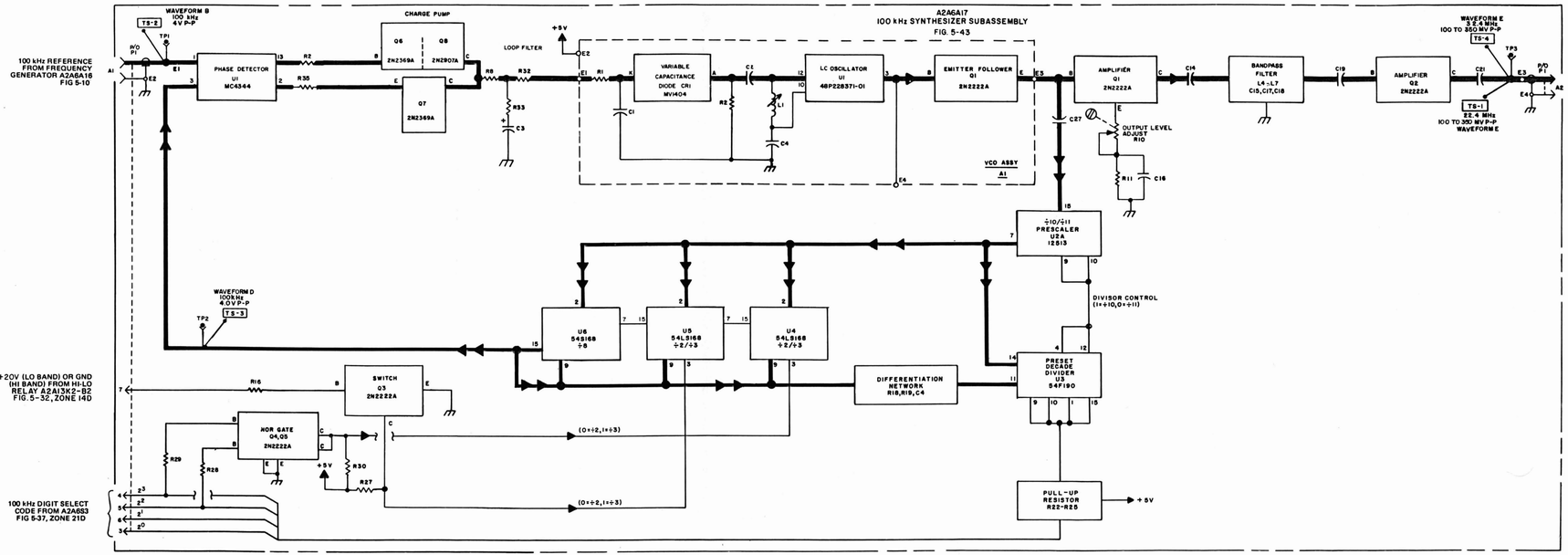

Figure 5-12. 100 kHz Synthesizer A2A6A17, Signal Flow Diagram

NOTES FOR FIGURE 5-13

GENERAL NOTES

A THESE PROCEDURES ARE AUTHORIZED FOR ACCOMPLISHMENT BY DEPOT-LEVEL ACTIVITIES ONLY.

B. TEST EQUIPMENT REQUIRED:
TRANSLATOR/SNTHESIZER TEST FIXTURE TS-3665/WRC-1
OSCILLOSCOPE 80009-465M OR EQUIVALENT
DIGITAL MULTIMETER 89536-8800A/AA OR EQUIVALENT
FREQUENCY STANDARD AN/URQ-23
ELECTRONIC COUNTER 28480-5328A-H99 OR EQUIVALENT
SPECTRUM ANALYZER 28480-8553B-E03 WITH AC PROBE 28480-1121A.

C. REFERENCES:
FUNCTIONAL DESCRIPTION, PARAGRAPH 3-88
MAINTENANCE SCHEMATIC, FIGURES 5-44 AND 5-45
TROUBLESHOOTING SEQUENCE, FIGURE 5-31
CORRECTIVE MAINTENANCE, PARAGRAPH 6-88
PHYSICAL LOCATION OF TEST POINTS, FIGURES 7-73 AND 7-74
WAVEFORMS, TABLE 6-6.

D. ——≀≀—— INDICATES BREAK POINTS USED TO REDUCE DIAGRAM CLUTTER. TO FIND MATING END OF BROKEN LINE PROCEED FROM BREAK POINT IN PARALLEL WITH DIAGRAM BORDER.

E. ——▶—— INDICATES SIGNAL FLOW.

F. ——◀◀—— INDICATES FEEDBACK.

SPECIFIC NOTES

1. THE FOLLOWING FUNCTION TABLES FOR THE A2A6A20U7, U3, U8 PROGRAMMABLE DIVIDERS SHOW THE VARIOUS INPUT AND OUTPUT COMBINATIONS REALIZED FOR POSSIBLE SETTINGS OF CODING SWITCHES A2A14A11S1, A2A6S1, AND A2A6S2. THE 0 STATE IS A LOGIC LOW (0.0 TO 0.4V); THE 1 STATE IS A LOGIC HIGH (2.4 TO 5.0V).

NOTES FOR FIGURE 5-13 (CONTINUED)

A2A6A20U7, U3, U8 PROGRAMS

10'S COMPLEMENT CONVERSION (PIN 14 = 0)

DIAL A2A14A11S1 A2A6S1 OR A2A6S2	INPUT PIN				OUTPUT PIN					
	13	12	11	10	6	5	4	3	2	1
0	0	0	0	0	1	0	0	0	0	0
1	0	0	0	1	0	1	1	0	0	1
2	0	0	1	0	0	1	1	0	0	0
3	0	0	1	1	0	1	0	1	1	1
4	0	1	0	0	0	1	0	1	1	0
5	0	1	0	1	0	1	0	1	0	1
6	0	1	1	0	0	1	0	1	0	0
7	0	1	1	1	0	1	0	0	1	1
8	1	0	0	0	0	1	0	0	1	0
9	1	0	0	1	0	1	0	0	0	1

9'S COMPLEMENT CONVERSION (PIN 14 = 1)

DIAL A2A14A11S1 A2A6S1 OR A2A6S2	INPUT PIN				OUTPUT PIN					
	13	12	11	10	6	5	4	3	2	1
0	0	0	0	0	0	1	1	0	0	1
1	0	0	0	1	0	1	1	0	0	0
2	0	0	1	0	0	1	0	1	1	1
3	0	0	1	1	0	1	0	1	1	0
4	0	1	0	0	0	1	0	1	0	1
5	0	1	0	1	0	1	0	1	0	0
6	0	1	1	0	0	1	0	0	1	1
7	0	1	1	1	0	1	0	0	1	0
8	1	0	0	0	0	1	0	0	0	1
9	1	0	0	1	0	1	0	0	0	0

NOTES FOR FIGURE 5-13 (CONTINUED)

SPECIFIC NOTES (CONTINUED)

2. TABLE OF NUMBER OF DIVISIONS BY 11 OF A2A6A20U1A FOR HZ SETTINGS

A2A14A11S1 POSITION	A2A6A20U4 INPUT COUNTS
000	0
100	9
200	8
300	7
400	6
500	5
600	4
700	3
800	2
900	1

3. TABLE OF A2A6A20U4 AND U9 PRESET COUNTS FOR HZ, 1 KHZ AND 10 KHZ SWITCH POSITIONS.

KHZ SWITCH SETTING A2A6S1	A2A6A20U4 PRESET COUNTS	
	HZ = 000	HZ OTHER THAN 000
0	0	9
1	9	8
2	8	7
3	7	6
4	6	5
5	5	4
6	4	3
7	3	2
8	2	1
9	1	0
10 KHZ SWITCH SETTING A2A6S2	**A2A6A20U9 PRESET COUNTS**	
	KHZ AND HZ = 0	KHZ OR HZ OTHER THAN 0
0	0	9
1	9	8
2	8	7
3	7	6
4	6	5
5	5	4
6	4	3
7	3	2
8	2	1
9	1	0

NOTES FOR FIGURE 5-13 (CONTINUED)

SPECIFIC NOTES (CONTINUED)

4. PRELIMINARY SETUP. PLACE TRANSLATOR/SYNTHESIZER ASSEMBLY A2A6 ON TEST FIXTURE AND REMOVE COVER FROM ASSEMBLY. PREPARE THE TEST FIXTURE BY SETTING ITS CONTROLS TO TEST A WRC-1 100 HZ TYPE MODULE IN THE RECEIVE MODE, WITHOUT VERNIER ACTION, AND A NORMAL 20 V LEVEL. SET TEST FIXTURE FREQUENCY CONTROLS FOR 2.0011 MHZ OPERATION BUT DO NOT APPLY POWER TO TEST FIXTURE.

5. TEST SETUP:

   a. CONNECT DIGITAL MULTIMETER TO APPROPRIATE CONNECTOR ON TEST FIXTURE FRONT PANEL.

   b. CONNECT FREQUENCY STANDARD AN/URQ-23 5 MHZ OUTPUT TO EXT 5 MHZ INPUT CONNECTOR ON REAR OF TEST FIXTURE.

   c. CONNECT ELECTRONIC COUNTER 28480-5328A-H99 TO MEASURE FREQUENCY AS DIRECTED.

6. PRELIMINARY CHECK:

   a. SET METER INPUT SELECTOR FOR +20V AND APPLY POWER. METER SHOULD INDICATE +19 TO +21 V.

   b. DISCONNECT DIGITAL MULTIMETER.

7. TEST STEPS:

TS-1	REFER TO NOTES 4, 5 AND 6 BEFORE PERFORMING TEST. OBSERVE SINE WAVE AT A2A6A19TP3. FREQUENCY AND AMPLITUDE SHOULD BE AS INDICATED.
TS-2	OBSERVE WAVEFORM A AT A2A6A19TP1. FREQUENCY AND AMPLITUDE SHOULD BE AS INDICATED.
TS-3	OBSERVE WAVEFORM SIMILAR TO D AT A2A6A20TP2 AND A2A6A19TP2. FREQUENCY AND AMPLITUDE SHOULD BE AS INDICATED.
TS-4	OBSERVE WAVEFORM E AT A2A6A20TP1. FREQUENCY AND AMPLITUDE SHOULD BE AS INDICATED.

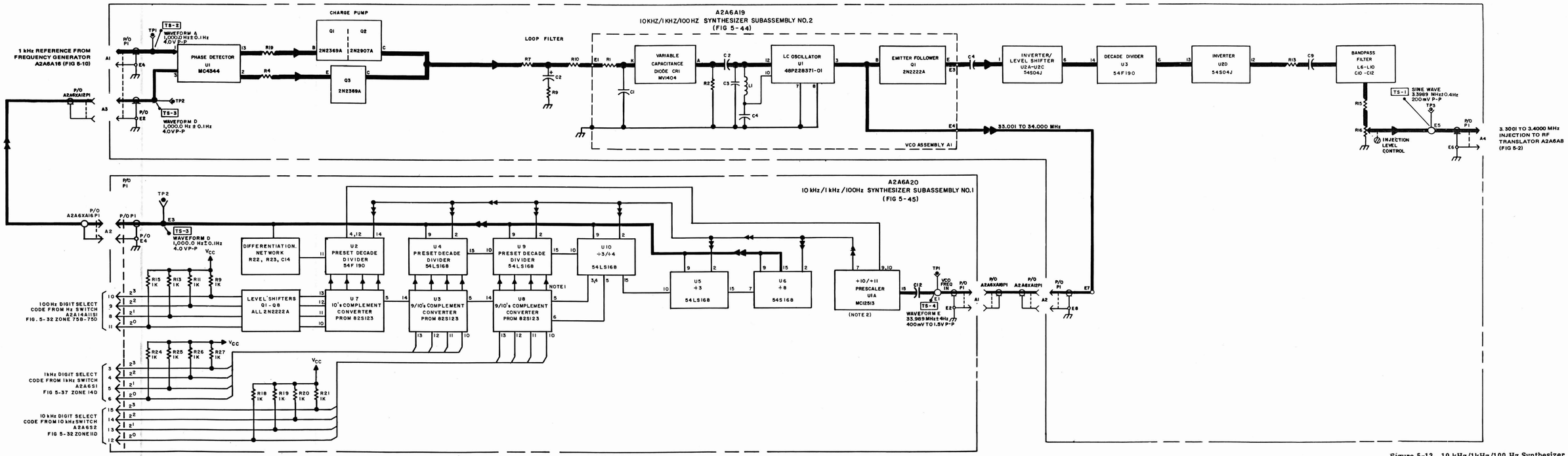

Figure 5-13. 10 kHz/1kHz/100 Hz Synthesizer A2A6A19/A2A6A20, Signal Flow Diagram

NOTES FOR FIGURE 5-14

GENERAL NOTES

A. ALL SWITCHES ARE SHOWN IN OPERATING POSITIONS.

B. REFERENCES:
FUNCTIONAL DESCRIPTION, PARAGRAPH 3-100
MAINTENANCE SCHEMATIC, FIGURE 5-32.

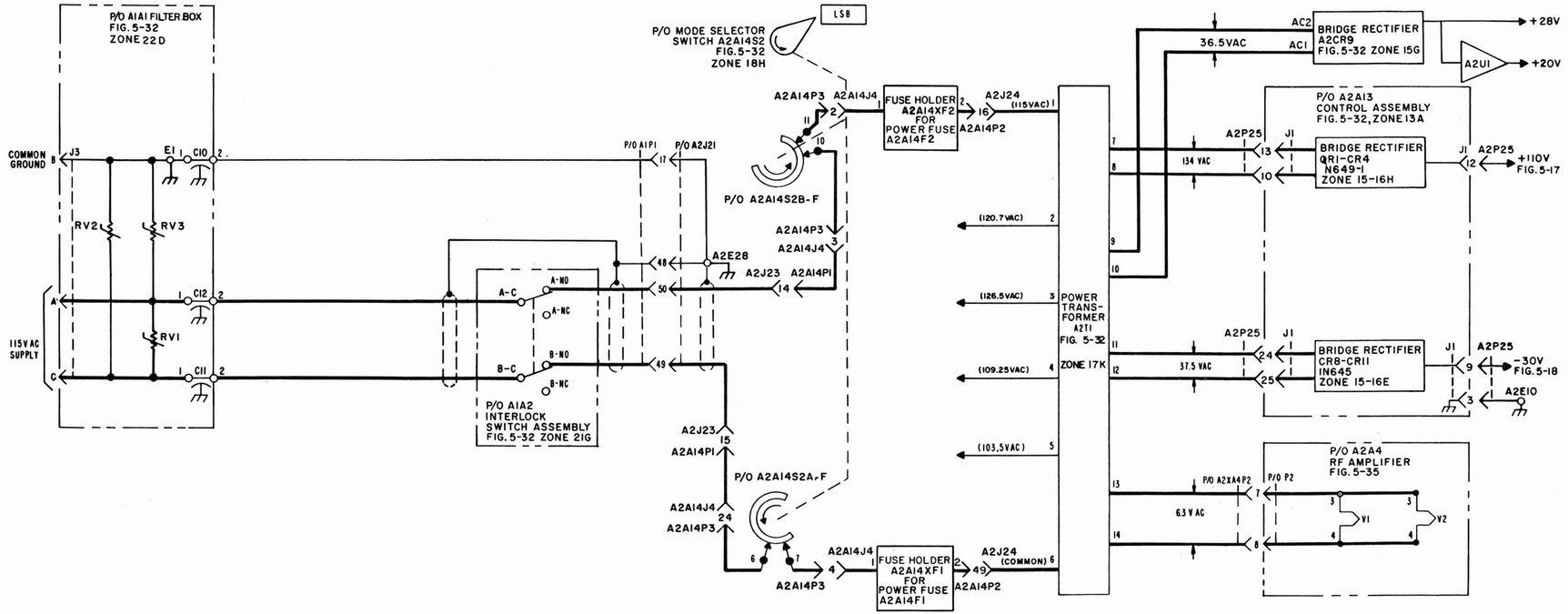

Figure 5-14. Ac Power Distribution Diagram.

NOTES FOR FIGURE 5-15

GENERAL NOTES

A. ALL SWITCHES AND RELAY CIRCUITS ARE SHOWN IN OPERATING POSITIONS.

B. REFERENCES:
FUNCTIONAL DESCRIPTION, PARAGRAPH 3-102
MAINTENANCE SCHEMATIC, FIGURE 5-32.

C. ⁓ INDICATES BREAK POINTS USED TO REDUCE DIAGRAM CLUTTER. TO FIND MATING END OF BROKEN LINE PROCEED FROM BREAK POINT IN PARALLEL WITH DIAGRAM BORDER.

SPECIFIC NOTES

1. CHART 1 GIVES THE CLOSED CONTACTS FOR MODE SELECTOR SWITCH A2A14S2 IN EACH OF ITS POSITIONS. REFER ALSO TO FIGURE 5-32, SHEET 1.

CHART 1, FIG. 5-32, ZONE 8B

A2A14S2D (REAR)	
FUNCTION	TERMINAL
OFF	4 TO 5
STDBY	6 TO 5
LSB (SHOWN)	4 TO 3
RATT	4 TO 5
AM	4 TO 5
CW	6 TO 5
USB	4 TO 5
ISB	4-3-5

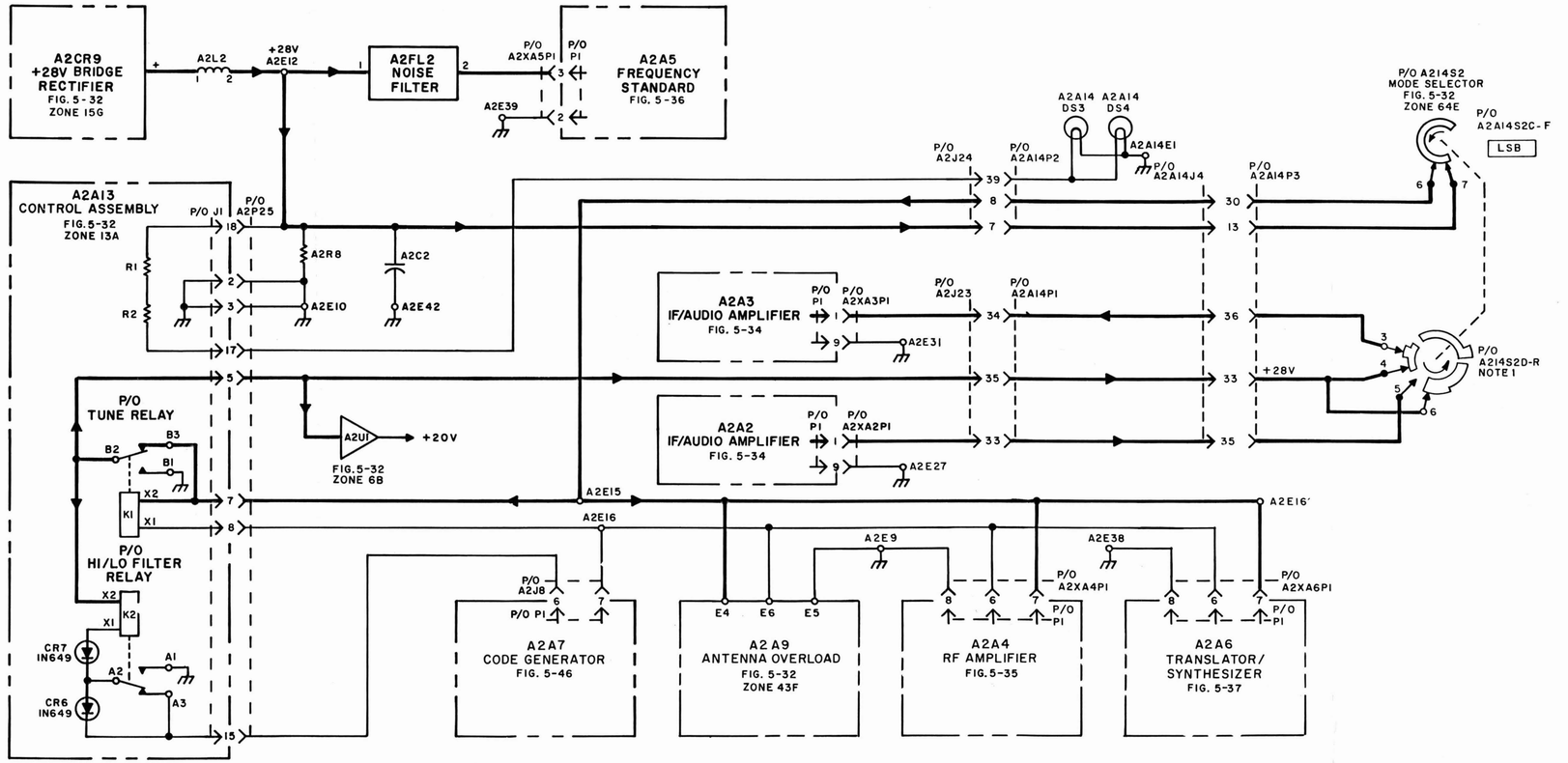

Figure 5-15. +28 V Power Distribution Diagram

NOTES FOR FIGURE 5-16

GENERAL NOTES

A. ALL SWITCHES AND RELAY CIRCUITS ARE SHOWN IN OPERATING POSITIONS.

B. REFERENCES:
FUNCTIONAL DESCRIPTION, PARAGRAPH 3-103
MAINTENANCE SCHEMATIC, FIGURE 5-32.

C. ——≀≀—— INDICATES BREAK POINTS USED TO REDUCE DIAGRAM CLUTTER. TO FIND MATING END OF BROKEN LINE PROCEED FROM BREAK POINT IN PARALLEL WITH DIAGRAM BORDER.

D. ———— +20V PATH

E. — — — — — +5V PATH

SPECIFIC NOTES

1. CHARTS 1 THRU 6 GIVE THE CONTACTS FOR MODE SELECTOR SWITCH A2A14S2 IN EACH OF ITS POSITIONS FOR THE PARTS OF THE SWITCH SHOWN ON THIS DIAGRAM. SWITCH SETTINGS SHOWN ARE FOR LSB ONLY. REFER ALSO TO FIGURE 5-32, SHEET 1.

CHART 1, FIG 5-32, ZONES 17H, 18H, 62C

A2A14S2A (FRONT)	
FUNCTION	TERMINAL
OFF	NO CONNECTION
STDBY	NO CONNECTION
LSB (SHOWN)	9 TO 11
RATT	12 TO 10
AM	11 TO 1
CW	12 TO 2
USB	3 TO 1
ISB	2 TO 4

CHART 2, FIG. 5-32, ZONE 8E

A2A14S2A (REAR)	
FUNCTION	TERMINAL
OFF	6-5-10
STDBY	8 TO 10
LSB (SHOWN)	8 TO 10, 4 TO 2
RATT	4 TO 5
AM	11 TO 10, 4 TO 5
CW	11 TO 10, 4 TO 5
USB	6 TO 5
ISB	4-5-2

NOTES FOR FIGURE 5-16 (CONTINUED)

SPECIFIC NOTES (CONTINUED)

CHART 3, FIG 5-32, ZONES 8J, 64C

A2A14S2B (REAR)	
FUNCTION	TERMINAL
OFF	NO CONNECTION
STDBY	NO CONNECTION
LSB (SHOWN)	3 TO 2
RATT	NO CONNECTION
AM	NO CONNECTION
CW	NO CONNECTION
USB	NO CONNECTION
ISB	6 TO 8

CHART 4, FIG 5-32, ZONE 62F

A2A14S2C (FRONT)	
FUNCTION	TERMINAL
OFF	NO CONNECTION
STDBY	NO CONNECTION
LSB (SHOWN)	11 TO 10
RATT	11-10-12
AM	11-12-1
CW	2-1-12
USB	2-1-3
ISB	2-3-4

CHART 5, FIG. 5-32, ZONE 64D

A2A14S2C (REAR)	
FUNCTION	TERMINAL
OFF	4 TO 6
STDBY	3-4-12
LSB (SHOWN)	6 TO 8
RATT	3 TO 6
AM	10 TO 8
CW	3-4-8
USB	10 TO 12
ISB	10 TO 6

CHART 6, FIG. 5-32, ZONE 64F

A2A14S2D (REAR)	
FUNCTION	TERMINAL
OFF	NO CONNECTION
STDBY	NO CONNECTION
LSB (SHOWN)	NO CONNECTION
RATT	12 TO 11
AM	NO CONNECTION
CW	NO CONNECTION
USB	12 TO 11
ISB	12 TO 11

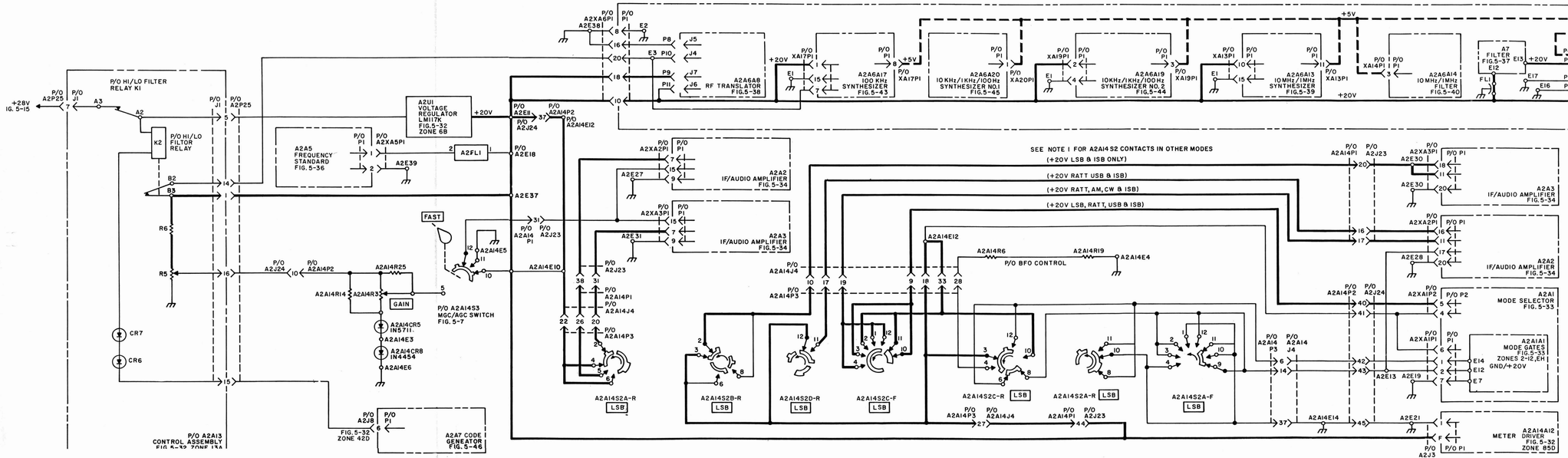

Figure 5-16. +20 V and +5
Distribution Diagra

NOTES FOR FIGURE 5-17

GENERAL NOTES

A. ALL SWITCHES AND RELAY CIRCUITS ARE SHOWN IN OPERATING POSITIONS.

B. REFERENCES:
FUNCTIONAL DESCRIPTION, PARAGRAPH 3-105
MAINTENANCE SCHEMATIC, FIGURE 5-32

C. ~~~ INDICATES BREAK POINTS USED TO REDUCE DIAGRAM CLUTTER. TO FIND MATING END OF BROKEN LINE PROCEED FROM BREAK POINT IN PARALLEL WITH DIAGRAM BORDER.

SPECIFIC NOTES

1. CHART 1 GIVES THE CONTACTS FOR MODE SELECTOR SWITCH A2A14S2 IN EACH OF ITS POSITIONS, FOR THE CONTACTS SHOWN ON THE DIAGRAM. REFER ALSO TO FIGURE 5-32, SHEET 1 FOR OTHER SWITCH INFORMATION.

CHART 1

A2A14S2B (REAR) FIG. 5-32, ZONE 8J	
FUNCTION	TERMINAL
OFF	NO CONNECTION
STDBY	NO CONNECTION
LSB (SHOWN)	10 TO 9
RATT	10 TO 9
AM	10 TO 11
CW	10 TO 9
USB	10-9-11
ISB	10 TO 9

A2A14S2C (FRONT) FIG 5-32, ZONE 8G	
FUNCTION	TERMINAL
OFF	NO CONNECTION
STDBY	NO CONNECTION
LSB (SHOWN)	6 TO 7
RATT	6 TO 7
AM	6 TO 7
CW	6 TO 7
USB	6 TO 7
ISB	6 TO 7

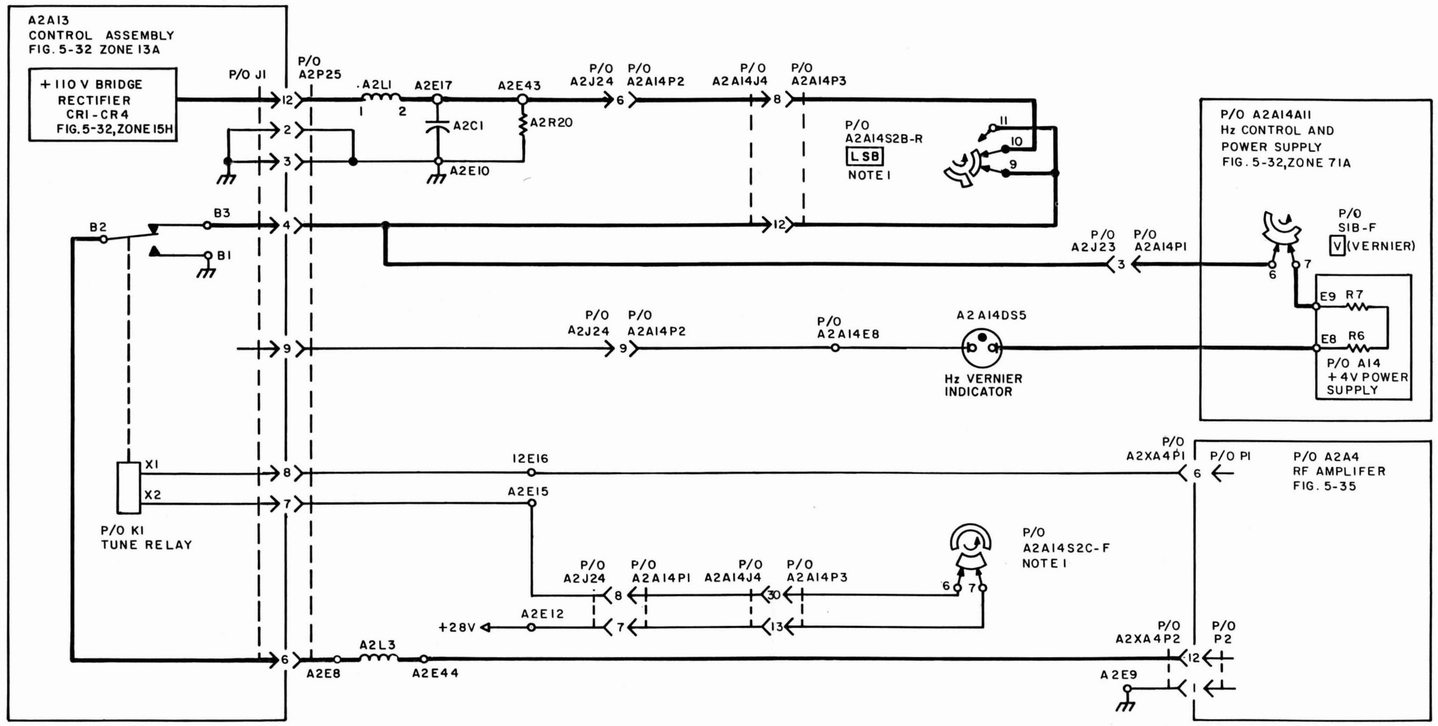

Figure 5-17. +110 V Power Distribution Diagram

NOTES FOR FIGURE 5-18

GENERAL NOTES

A. ALL SWITCHES ARE SHOWN IN OPERATING POSITIONS.

B. REFERENCES:
FUNCTIONAL DESCRIPTION, PARAGRAPH 3-106
MAINTENANCE SCHEMATIC, FIGURE 5-32.

C. ——~~——— INDICATES BREAK POINTS USED TO REDUCE DIAGRAM CLUTTER. TO FIND MATING END OF BROKEN LINE PROCEED FROM BREAK POINT IN PARALLEL WITH DIAGRAM BORDER.

SPECIFIC NOTES

1. CHART 1 GIVES THE CONTACTS FOR MODE SELECTOR SWITCH A2A14S2 IN EACH OF ITS POSITIONS FOR THOSE CONTACTS SHOWN ON THE DIAGRAM. REFER ALSO TO FIGURE 5-32, SHEET 1, FOR ALL OTHER SWITCH INFORMATION.

CHART 1, FIG. 5-32, ZONE 8D

A2A14S2D (FRONT)	
FUNCTION	TERMINAL
OFF	11 TO 10
STDBY	11 TO 12
LSB (SHOWN)	12 TO 2
RATT	11 TO 10
AM	11 TO 10
CW	11 TO 10
USB	11 TO 10
ISB	7-6, 11-10

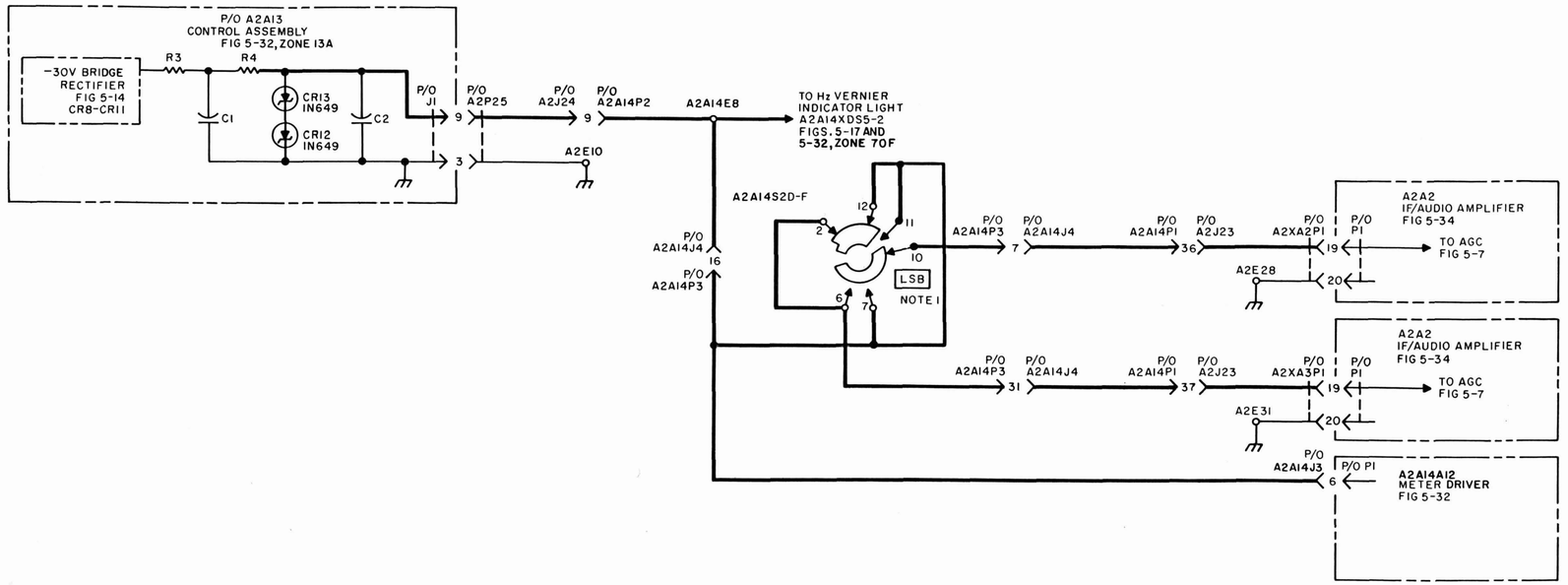

Figure 5-18. -30 V Power Distribution Diagram

NOTES FOR FIGURE 5-19

GENERAL NOTES

A. ALL SWITCHES AND RELAY CIRCUITS ARE SHOWN IN OPERATING POSITIONS.

B. REFERENCES:
FUNCTIONAL DESCRIPTION, PARAGRAPH 3-109
MAINTENANCE SCHEMATIC, FIGURE 5-32.

SPECIFIC NOTES

1. ALL CIRCUIT-OPEN CODE LINES ON A2XA4P1-1 THROUGH A2XA4P1-5 ARE CONNECTED THROUGH CODE GENERATOR ASSEMBLY A2A7, FIGURE 5-46.

2. SWITCHES A2A4S1-A AND A2A4S1-B ARE SHOWN AT SETTING 2 (2 MHZ).

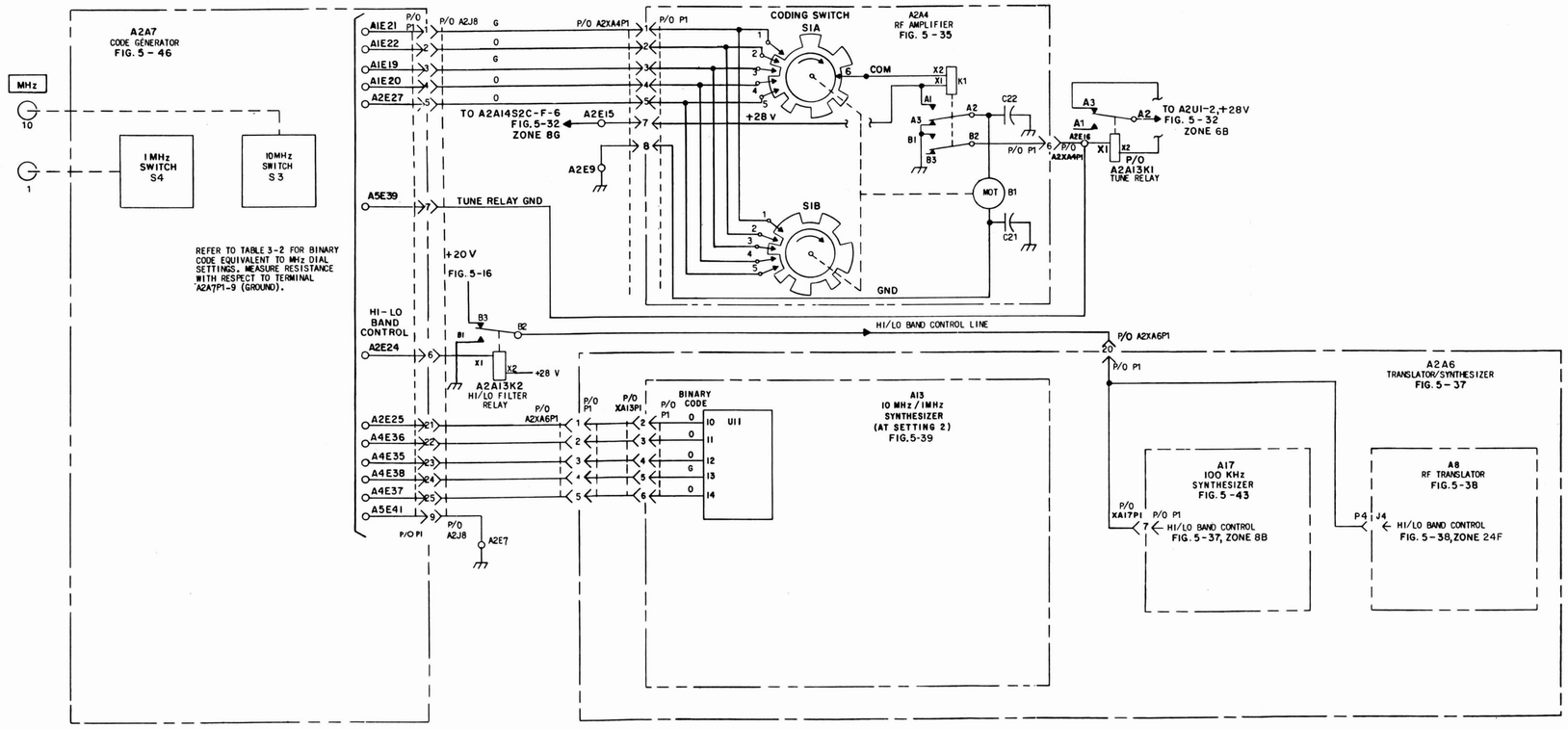

Figure 5-19. Tuning Control Diagram

NOTES FOR FIGURE 5-21

GENERAL NOTES

A. THIS DIAGRAM FOR DEPOT USE ONLY.

B. TEST SETUP:
REFER TO SIGNAL FLOW DIAGRAM, FIGURE 5-2.

C. REFER TO SCHEMATIC DIAGRAMS, FIGURES 5-37, 5-38, 5-39, 5-40, 5-43, 5-44, 5-45.

D. LEGEND
YES _____
NO --------

E. WAVEFORMS, TABLE 6-6.

F. SPECTRUM ANALYZER MUST USE HIGH IMPEDANCE INPUT PROBE.

G. USE SIGNAL GENERATOR TO VERIFY FREQUENCY.

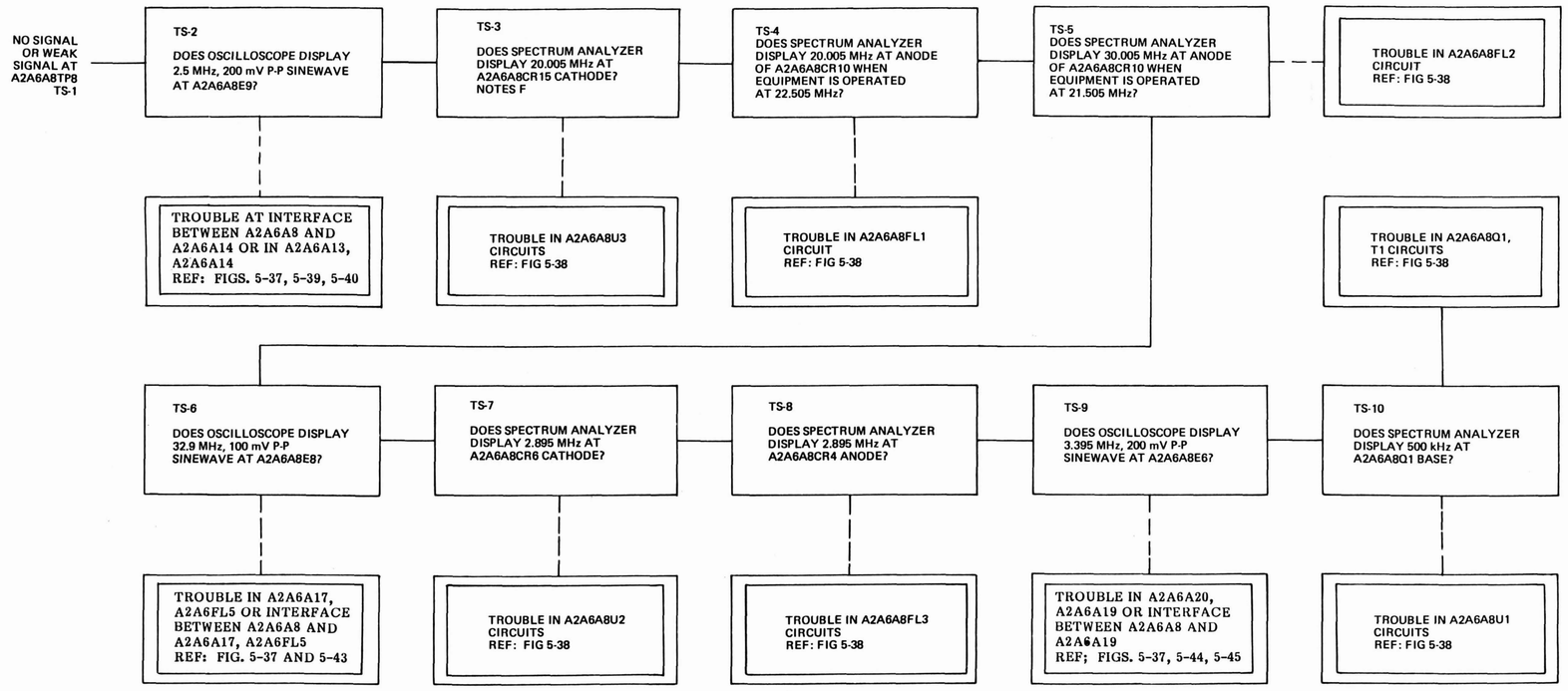

Figure 5-21. Rf-to-IF Conversion, Fault Logic Diagram

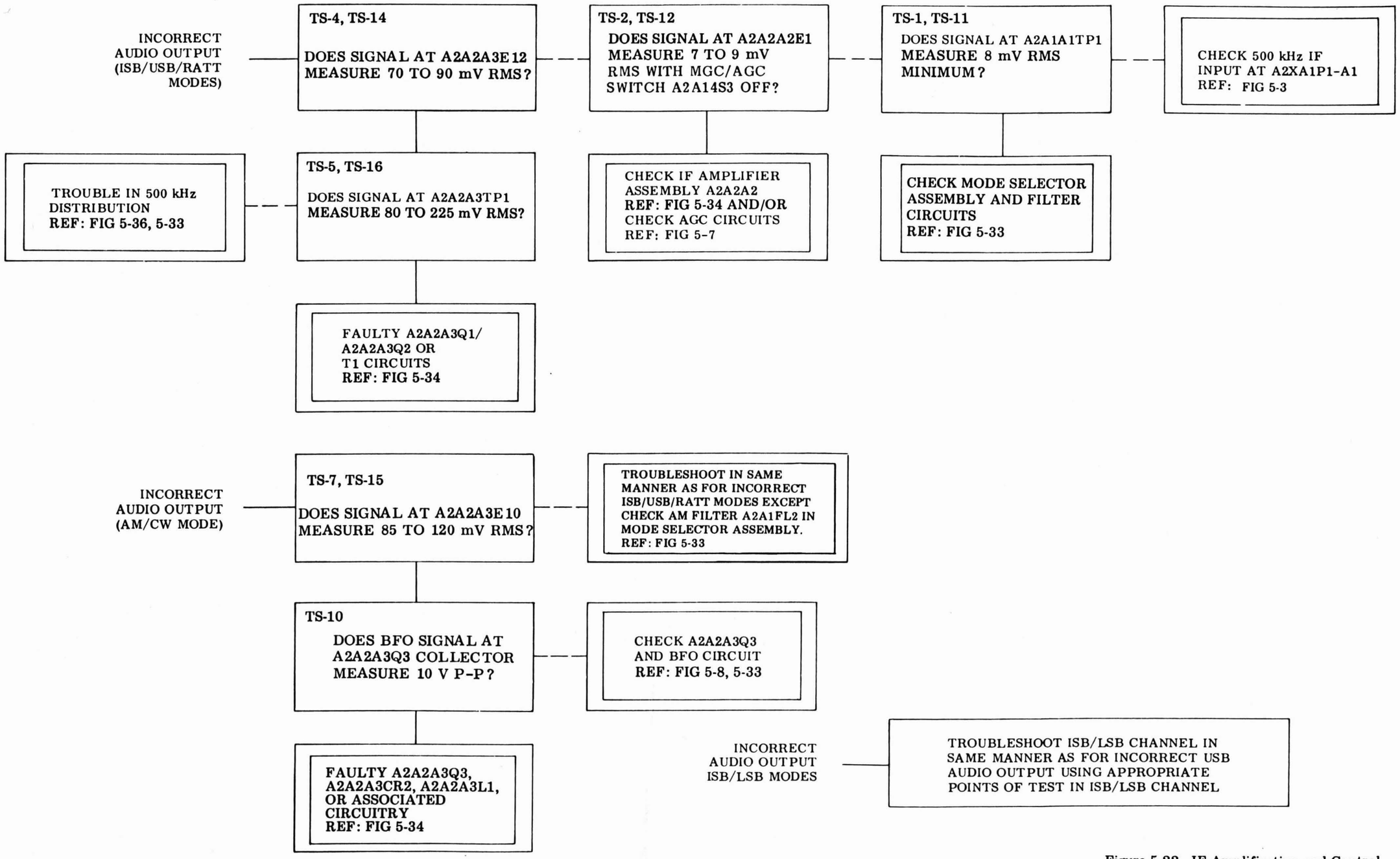

Figure 5-22. IF Amplification and Control, Fault Logic Diagram

NOTES FOR FIGURE 5-23

GENERAL NOTES

A. ENSURE THAT PROPER POWER SUPPLY AND GATING VOLTAGES ARE APPLIED TO THE CIRCUIT UNDER TEST.

B. TEST SETUP:
REFER TO SIGNAL FLOW DIAGRAM, FIGURE 5-5.

C. REFER TO SCHEMATIC DIAGRAMS, FIGURES 5-32 AND 5-34.

D. ALL AC VOLTAGES IN RMS.

E. LEGEND:
YES _____
NO ----------

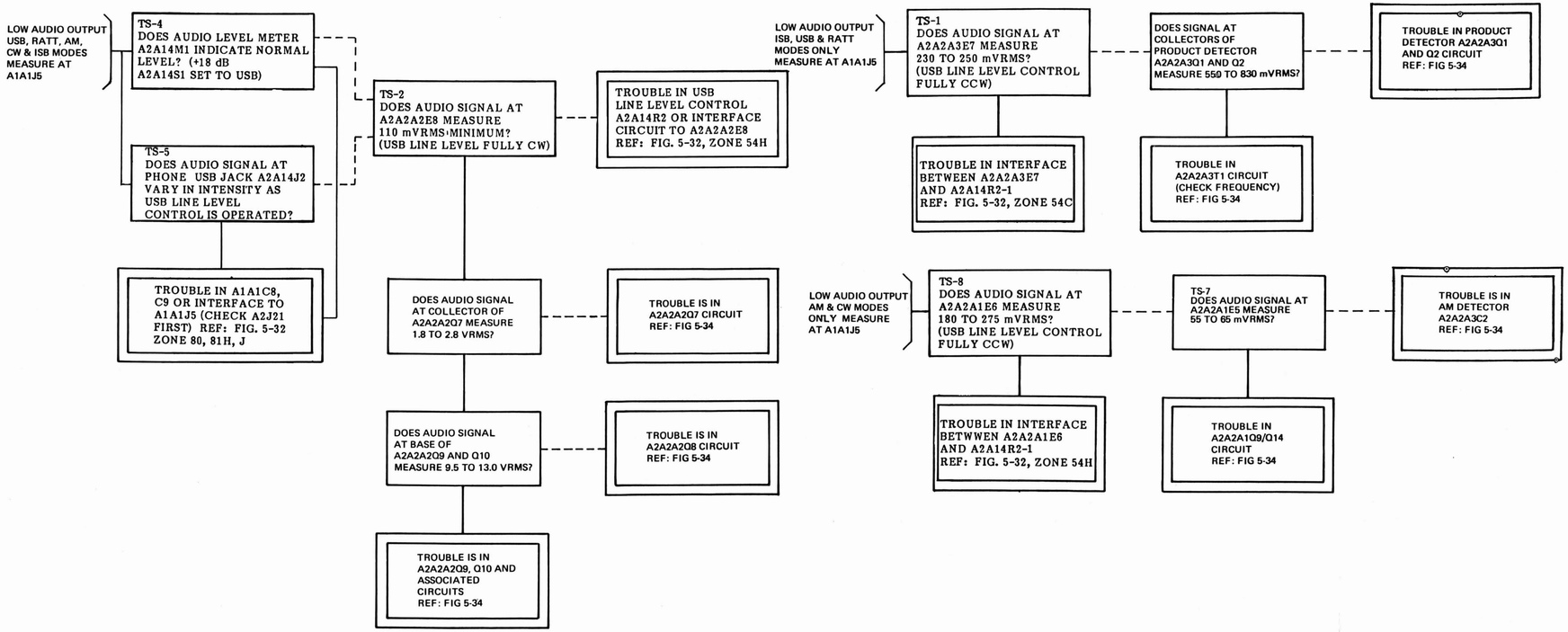

Figure 5-23. Audio Amplification (USB, RATT, AM, CW AND ISB Modes), Fault Logic Diagram

NOTES FOR FIGURE 5-24

GENERAL NOTES

A. ENSURE THAT THE PROPER POWER SUPPLY AND GATING VOLTAGES ARE APPLIED TO THE CIRCUIT UNDER TEST.

B. TEST SETUP:
REFER TO SIGNAL FLOW DIAGRAM, FIGURE 5-6.

C. REFER TO SCHEMATIC DIAGRAMS, FIGURES 5-32 AND 5-34.

D. ALL AC VOLTAGES IN RMS.

E. LEGEND
YES _____
NO ----------

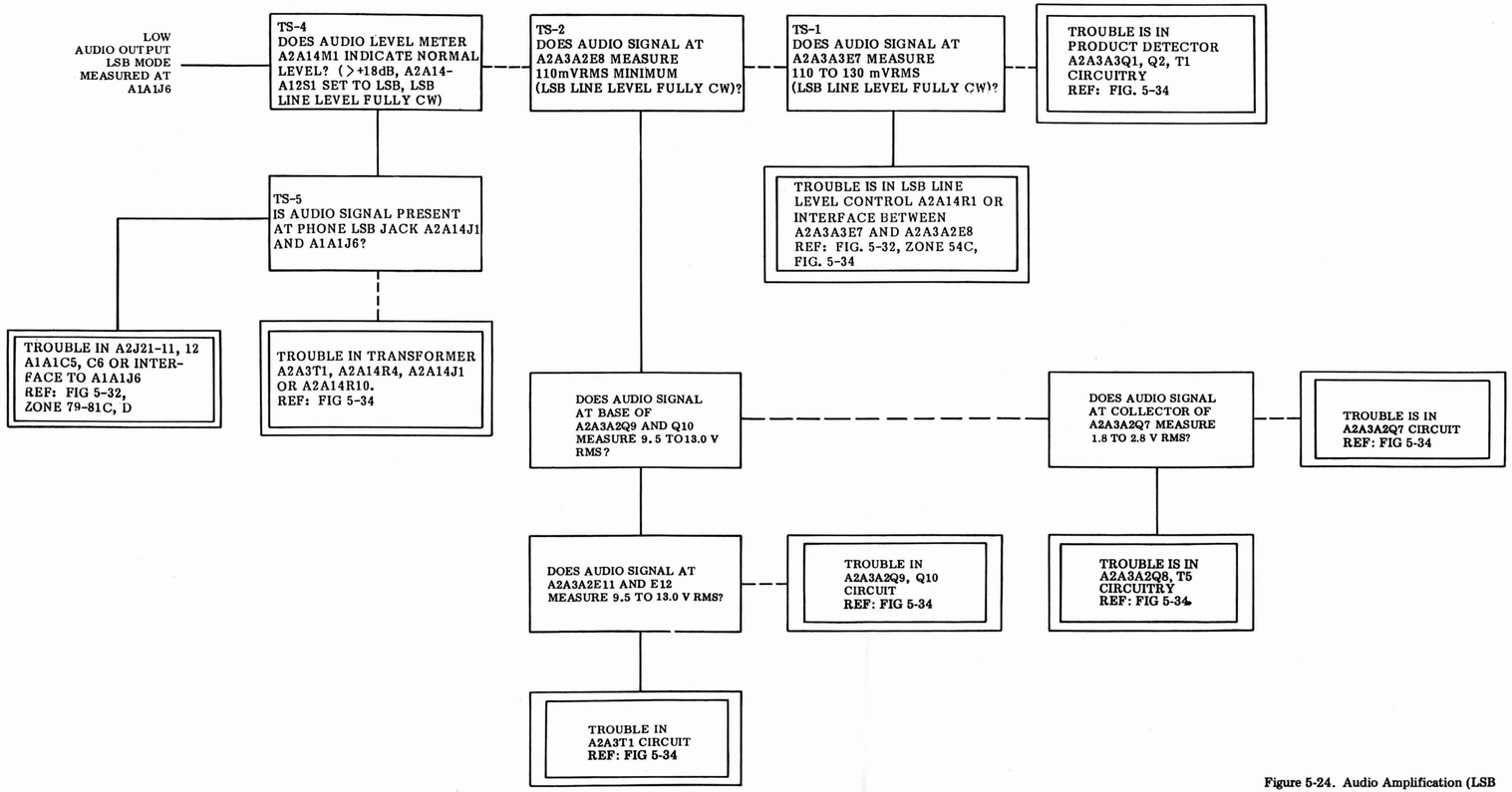

Figure 5-24. Audio Amplification (LSB Mode), Fault Logic Diagram

NOTES FOR FIGURE 5-25

GENERAL NOTES

A. ENSURE THAT THE PROPER POWER SUPPLY AND GATING VOLTAGES ARE APPLIED TO THE CIRCUIT UNDER TEST.

B. TEST SETUP:
REFER TO SIGNAL FLOW DIAGRAM, FIGURE 5-7.

C. REFER TO SCHEMATIC DIAGRAM, FIGURE 5-34.

D. ALL AC VOLTAGES IN RMS.

E. LEGEND:
YES _____
NO - - - - - - - - -

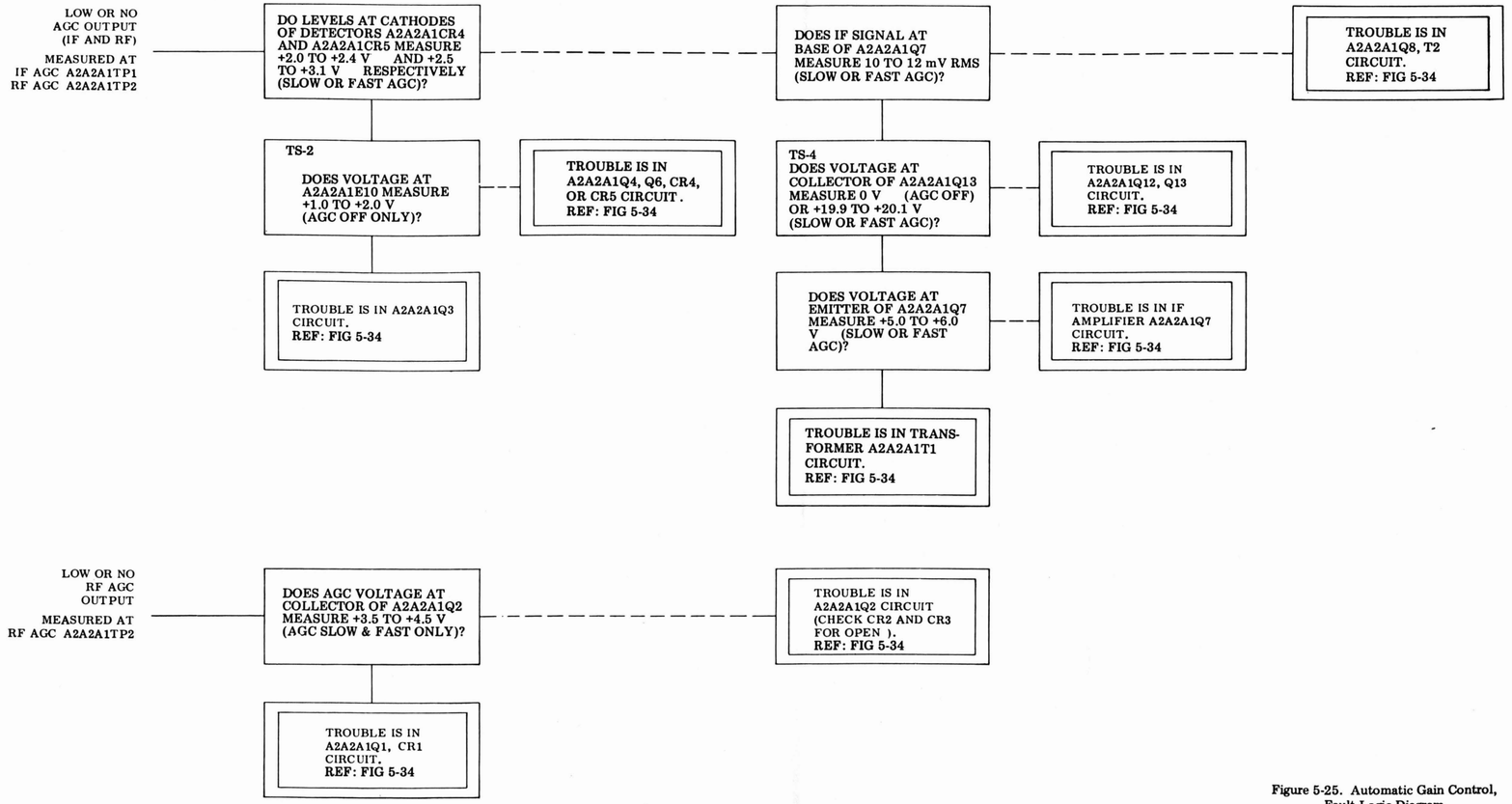

Figure 5-25. Automatic Gain Control, Fault Logic Diagram

NOTES FOR FIGURE 5-26

GENERAL NOTES

A. ENSURE THAT THE PROPER POWER SUPPLY AND GATING VOLTAGES ARE APPLIED TO THE CIRCUIT UNDER TEST.

B. TEST SETUP:
REFER TO SIGNAL FLOW DIAGRAM, FIGURE 5-8.

C. REFER TO SCHEMATIC DIAGRAMS, FIGURES 5-32, 5-33 AND 5-34.

D. ALL AC VOLTAGES IN RMS.

E. LEGEND:
YES _____
NO - - - - - - - - -

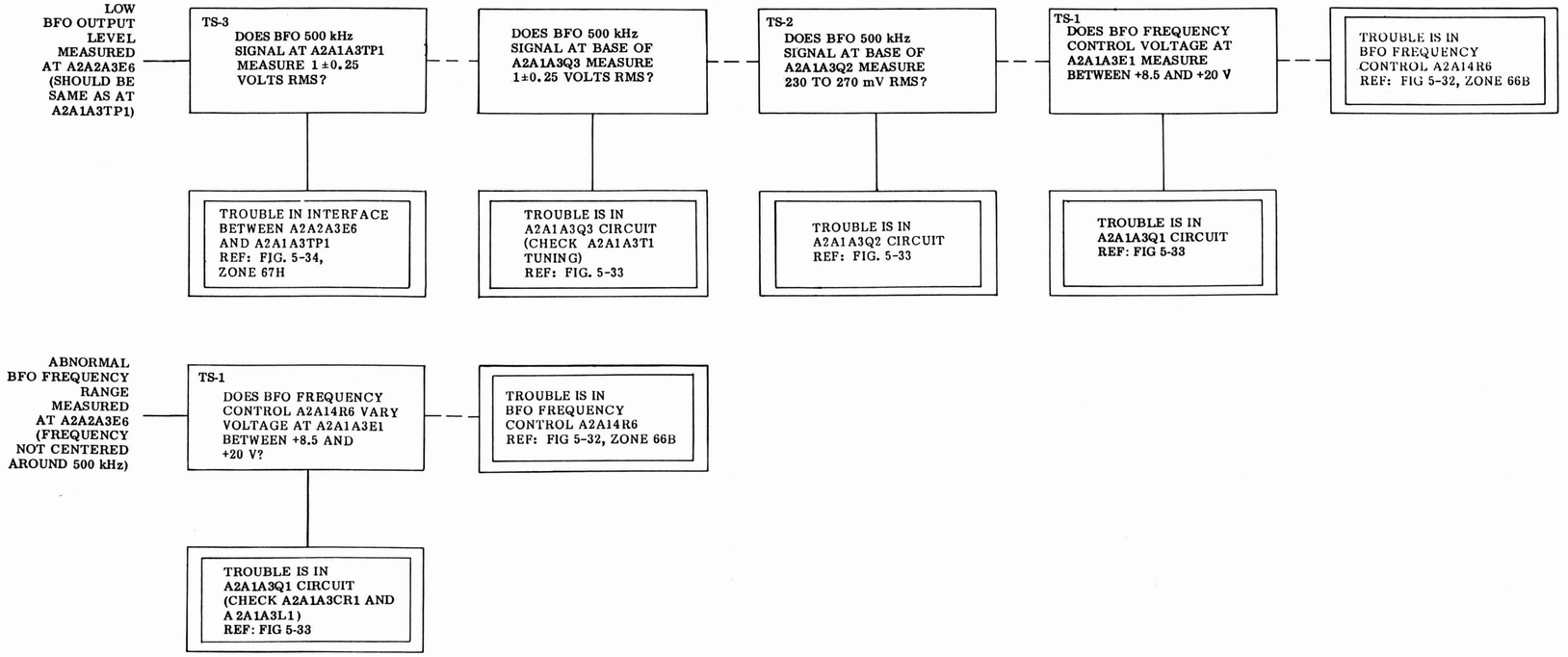

Figure 5-26. Beat Frequency Oscillator, Fault Logic Diagram

NOTES FOR FIGURE 5-27

GENERAL NOTES

A. TEST SETUP:
REFER TO SIGNAL FLOW DIAGRAM, FIGURE 5-9.

B. REFER TO SCHEMATIC DIAGRAM, FIGURE 5-36.

C. LEGEND:
YES _____
NO - - - - - - - - -

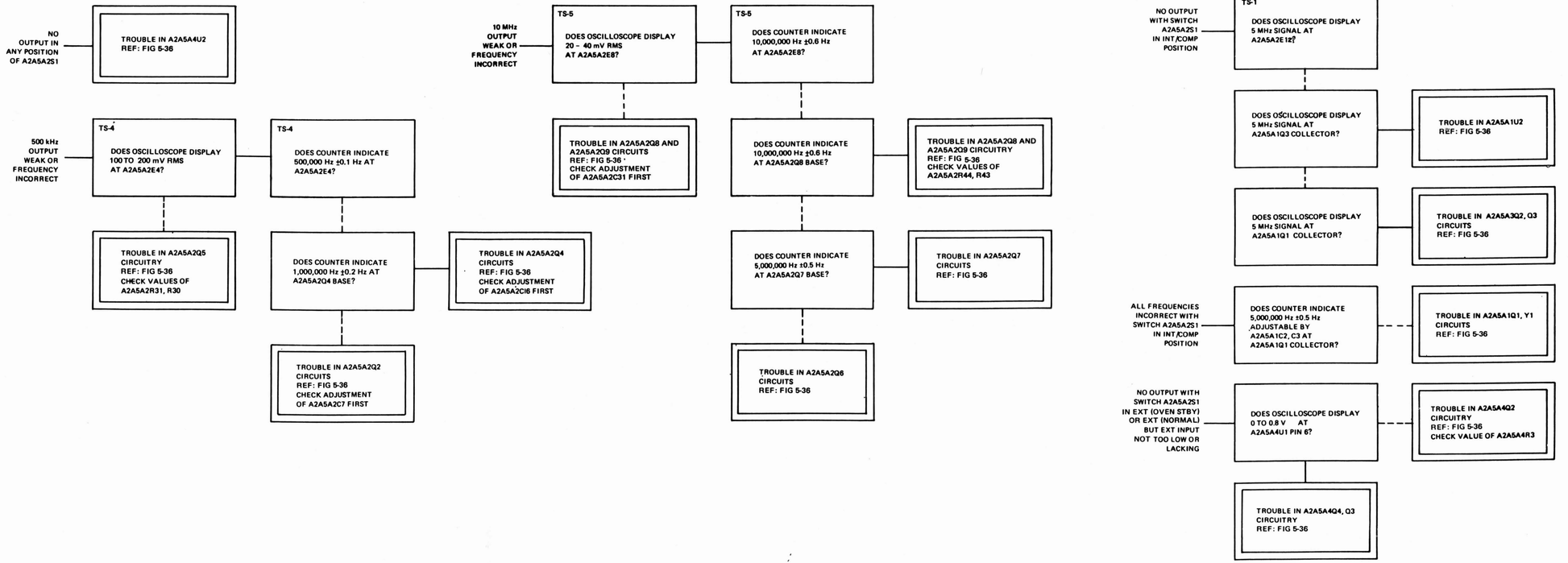

Figure 5-27. Standard Frequency Generation and Distribution, Fault Logic Diagram

NOTES FOR FIGURE 5-28

GENERAL NOTES

A. REFER TO SIGNAL FLOW DIAGRAM, FIGURE 5-10 FOR TEST STEPS AND WAVEFORM INFORMATION.

B. REFER TO MAINTENANCE SCHEMATIC DIAGRAMS, FIGURES 5-39 AND 5-40.

C. LEGEND:
YES _____
NO - - - - - - - - -

D. REFER TO FREQUENCY TRANSLATION CHART, TABLE 3-1.

SPECIFIC NOTES

1. TESTS OUTLINED IN THE NOTES ON SIGNAL FLOW DIAGRAM, FIGURE 5-10, MUST BE PERFORMED IN THEIR ENTIRETY TO DETERMINE WHICH FREQUENCY RANGES ARE MALFUNCTIONING BEFORE FAULT LOGIC DIAGRAM 5-28 IS USED.

2. SIGNAL SHOULD BE PRESENT AT TEST POINTS INDICATED FOR THE RANGE SELECTED ONLY.
EXAMPLE:NO OUTPUT AT A2A6A14TP5 WHEN FREQUENCY CONTROLS ARE SET AT 8.0000 MHz. FREQUENCY TRANSLATION CHART, TABLE 3-1, SHOWS THE HIGH FREQUENCY MIXER INJECTION SIGNAL SHOULD BE 11.5 MHZ. THUS ONLY A2A6A14TP4 SHOULD HAVE A SIGNAL PRESENT. SIMILARLY, ONLY A2A6A14TP3 SHOULD BE AT 0 to +0.4 V.

3. REMOVE POWER FROM TEST FIXTURE. REMOVE A2A6A13 AND A2A6A14 SUBASSEMBLIES AND REINSTALL ON EXTENDER BOARDS.

4. REFER TO FREQUENCY TRANSLATION CHART, TABLE 3-1, FOR CORRECT FREQUENCY FOR INDICATED CONTROL SETTINGS.

5. SIGNAL SHOULD HAVE A PEAK AMPLITUDE OF 4 V. FREQUENCY WILL VARY BUT SHOULD BE IN CORRECT RANGE.

6. COMPARE SIGNALS WITH FREQUENCY COUNTER.

7. REMOVE POWER FROM TEST FIXTURE. REMOVE FREQUENCY GENERATOR SUBASSEMBLY A2A6A16. SET CONTROLS OF PULSE GENERATOR 52542-114A FOR A 200 NANOSEC-WIDE PULSE AT 200 KHZ REPETITION RATE WITH A +4V PEAK AMPLITUDE. CONNECT PULSE GENERATOR TO A2A6A13TP2. RESTORE POWER TO TEST FIXTURE. MEASURE DC VOLTAGE AT THE JUNCTION OF A2A6A13R19 AND C14 WITH THE DIGITAL MULTIMETER. CHANGE PULSE GENERATOR FREQUENCY to 1 MHZ. MEASURE DC VOLTAGE AS ABOVE. VOLTAGE SHOULD RANGE FROM +1.5 V OR LESS AT 200 KHZ TO +9.0 V OR MORE AT 1 MHZ.

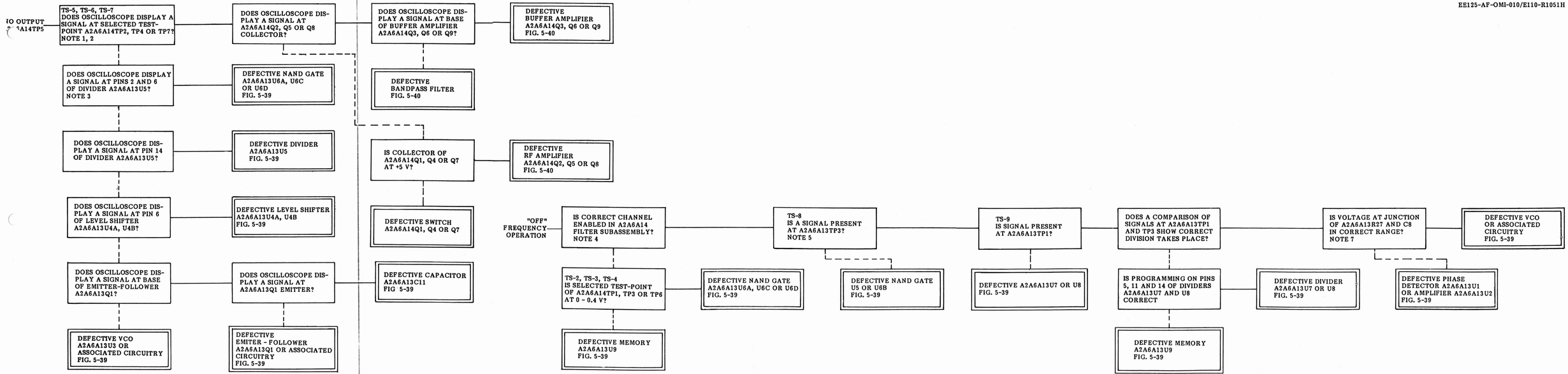

Figure 5-28. 10 MHz/1 MHz Synthesizer Subassemblies A2A6A13 and A2A6A14, Fault Logic Diagram

NOTES FOR FIGURE 5-29

GENERAL NOTES

A. TEST SETUP:
REFER TO SIGNAL FLOW DIAGRAM, FIGURE 5-11.

B. REFER TO SCHEMATIC DIAGRAMS, FIGURES 5-37 AND 5-42.

C. LEGEND
YES _____
NO - - - - - - - - -

D. SEE TABLE 6-6 FOR REFERENCED WAVEFORMS.

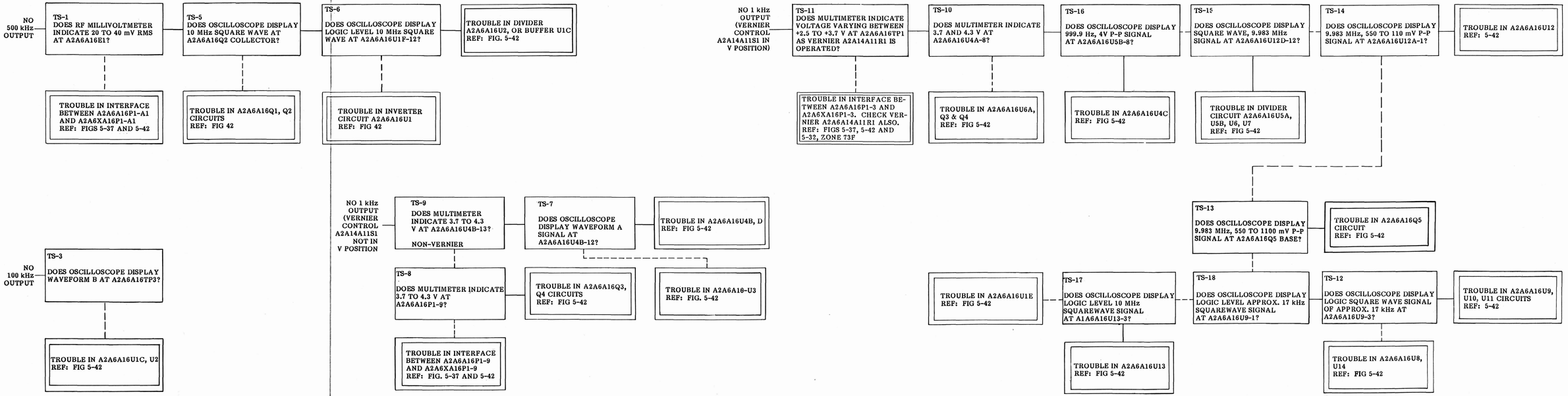

Figure 5-29. Frequency Generator A2A6A16, Fault Logic Diagram

NOTES FOR FIGURE 5-30

GENERAL NOTES

A. REFER TO SIGNAL FLOW DIAGRAM, FIGURE 5-12, FOR TEST STEPS AND WAVEFORM INFORMATION.

B. REFER TO MAINTENANCE SCHEMATIC DIAGRAM, FIGURE 5-43.

C. LEGEND:
YES _____
NO - - - - - - - - -

D. SET INITIAL TESTS BY INFORMATION GIVEN IN NOTES ON FIGURE 5-12.

E. SEE TABLE 6-6 FOR REFERENCED WAVEFORMS.

SPECIFIC NOTES

1. WAVEFORM FREQUENCY MUST BE 100 KHZ AS MEASURED ON FREQUENCY COUNTER. AMPLITUDE SHOULD BE 4 V P-P. AN INCORRECT WAVESHAPE, WAVE FREQUENCY OR PULSE AMPLITUDE INDICATES A FAULT AND SHOULD BE INTERPRETED AS "NO".

2. SIGNAL FREQUENCY SHOULD BE 22.4 MHZ. WAVESHAPE SHOULD APPROXIMATE WAVEFORM J.

3. REMOVE POWER FROM TEST FIXTURE. REMOVE 100 KHZ SYNTHESIZER SUBASSEMBLY A2A6A17 AND REINSTALL ON EXTENDER BOARD. REMOVE FREQUENCY GENERATOR SUBASSEMBLY A2A6A16. SET PULSE GENERATOR 52542-114A FOR A POSITIVE 4 V PULSE OUTPUT (45 MILLISEC ±5 MILLISEC WIDE AT 90 KHZ (REP RATE: INT, DELAY: MIN.) CONNECT TO A2A6A17TP1. RESTORE POWER TO TEST FIXTURE. MEASURE DC VOLTAGE AT A2A6A17A1E1. CHANGE PULSE GENERATOR FREQUENCY TO 110 KHZ AND MEASURE DC VOLTAGE AT A2A6A17A1E1.

4. REMOVE POWER FROM TEST FIXTURE. POWER 100 KHZ SYNTHESIZER SUBASSEMBLY A2A6A17 AND REINSTALL ON EXTENDER BOARD. SIGNAL AT PIN 1 OF A2A6A17U5 SHOULD APPROXIMATE WAVEFORM H IN SHAPE AND AMPLITUDE AND BE AT A FREQUENCY OF 2.20 MHZ.

5. SIGNAL AT PIN 10 OF A2A6A17U5 SHOULD APPROXIMATE WAVEFORM G INVERTED IN SHAPE AND AMPLITUDE AND BE AT A FREQUENCY OF 100 KHZ.

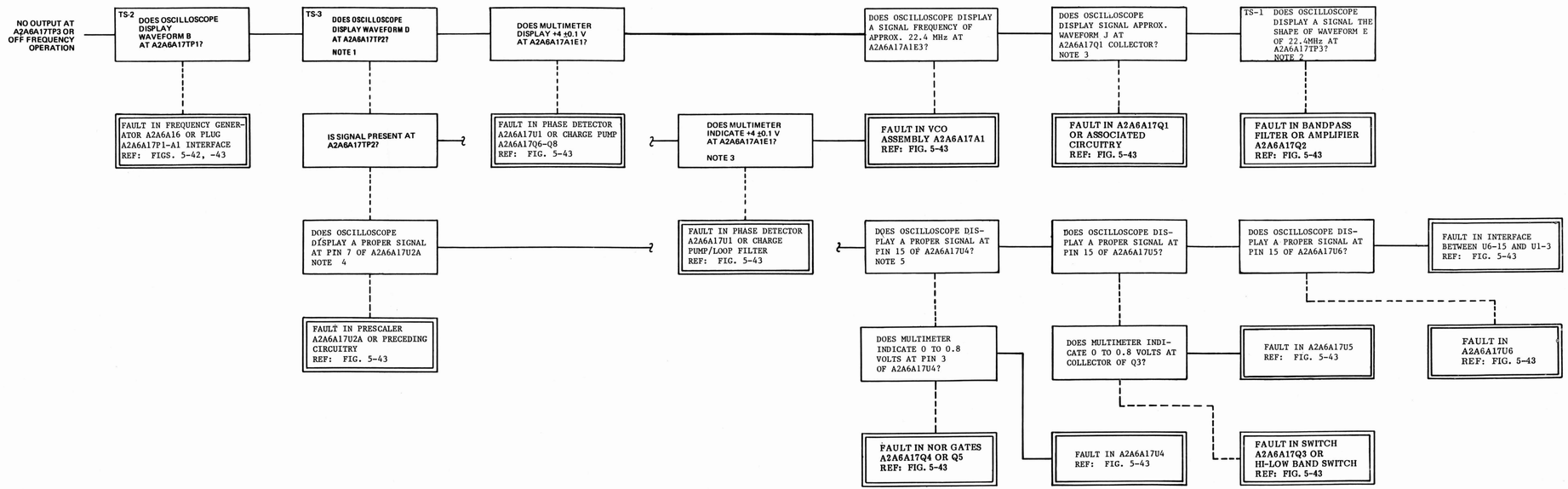

Figure 5-30. 100 kHz Synthesizer A2A6A17, Fault Logic Diagram

NOTES FOR FIGURE 5-31

GENERAL NOTES

A. REFER TO SIGNAL FLOW DIAGRAM, FIGURE 5-13, FOR TS-2 AND TS-4 TEST STEPS AND FOR WAVEFORM INFORMATION.

B. REFER TO MAINTENANCE SCHEMATIC DIAGRAMS, FIGURES 5-37, 5-44 AND 5-45.

C. LEGEND:
YES _____
NO - - - - - - - - -

D. SEE TABLE 6-6 FOR REFERENCED WAVEFORMS.

SPECIFIC NOTES

1. REMOVE POWER FROM TEST FIXTURE. RELEASE LATCHES AND REMOVE 10 KHZ/1 KHZ/100 HZ SYNTHESIZER SUBASSEMBLIES A2A6A20 AND 10 KHZ/ 1 KHZ/100 HZ SYNTHESIZER SUBASSEMBLY A2A6A19. PLACE EXTENDER BOARD IN A2A6A20 LOCATION AND MATE CONNECTOR A2A6A20P1 WITH CONNECTOR ON EXTENDER BOARD. DO NOT REINSTALL THE A2A6A19 SUBASSEMBLY. SET THE TEST FIXTURE CONTROLS TO TEST A WRC-1 100 HZ TYPE MODULE IN THE NONVERNIER RECEIVE MODE AT 2.0011 MHZ. SET RF SIGNAL GENERATOR 28480-8660C-001-100 FOR A 300 MV RMS OUTPUT AT 33.989 MHZ AND CONNECT OUTPUT TO TEST POINT A2A6A20TP1. PERFORM ADDITIONAL TEST SETUP AND PRELIMINARY CHECK AS DESCRIBED IN NOTES 5 AND 6 OF FIGURE 5-13. AT THE COMPLETION OF CHECKS RESTORE A2A6 ASSEMBLY TO NORMAL OPERATING CONDITION.

2. REMOVE POWER FROM TEST FIXTURE. RELEASE LATCHES AND REMOVE 10 KHZ/1 KHZ/100 HZ SYNTHESIZER SUBASSEMBLIES A2A6A20 AND 10 KHZ/1 KHZ/100 HZ SYNTHESIZER SUBASSEMBLY A2A6A19. PLACE EXTENDER BOARD IN A2A6A19 LOCATION AND MATE CONNECTOR A2A6A19P1 WITH CONNECTOR ON EXTENDER BOARD. DO NOT REINSTALL THE A2A6A20 SUBASSEMBLY. SET THE TEST FIXTURE CONTROLS TO TEST A WRC-1 100 HZ TYPE MODULE IN THE NONVERNIER RECEIVER MODE AT 2.0011 MHZ. SET PULSE GENERATOR 52542-114A FOR A POSITIVE 4 V PULSE OUTPUT 450 MICROSEC ±50 MICROSEC WIDE AT 950 HZ. (REP RATE: INT. DELAY: MIN.) CONNECT OUTPUT TO TEST POINT A2A6A19TP2. RESTORE POWER TO TEST FIXTURE. PERFORM ADDITIONAL TEST SETUP AND PRELIMINARY CHECK AS DESCRIBED IN NOTES 5 AND 6 OF FIGURE 5-13.

3. PERFORM TEST SETUP AS DESCRIBED IN NOTE 2 EXCEPT THAT PULSE GENERATOR IS SET FOR 1050 HZ OUTPUT. AT THE COMPLETION OF CHECKS RESTORE A2A6 ASSEMBLY TO NORMAL OPERATING CONDITION.

4. FREQUENCY SHOULD BE 1.0 KHZ. AMPLITUDE SHOULD BE 4 V P-P.

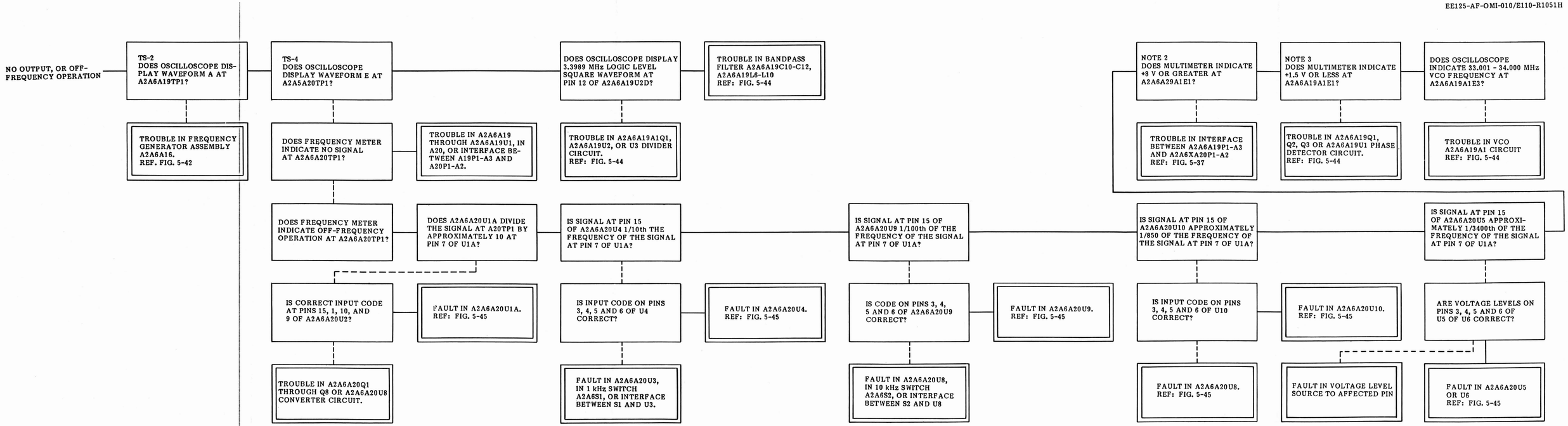

Figure 5-31. 10 kHz/1 kHz/100 Hz Synthesizer Subassemblies (No. 1) A2A6A20 and (No. 2) A2A6A19, Fault Logic Diagram

NOTES FOR FIGURE 5-32

GENERAL NOTES

A. PARTIAL REFERENCE DESIGNATIONS ARE SHOWN, FOR COMPLETE DESIGNATIONS PREFIX WITH NUMBERS OF HIGHER ASSEMBLIES.

B. ALL RESISTANCE VALUES IN OHMS, UNLESS OTHERWISE NOTED.

C. ALL CAPACITANCE VALUES IN MICROFARADS, UNLESS OTHERWISE NOTED.

D. RESISTANCES OF COILS, RELAYS AND TRANSFORMER WINDINGS SHOWN WHEN GREATER THAN ONE OHM.

E. SWITCHES A2A14S2 AND A2A14S3 ARE SHOWN AS VIEWED FROM REAR OF FRONT PANEL, IN THE OFF POSITION. A BLACK SWITCH TERMINAL INDICATES A LONG CLIP AT THAT POINT.

F. ——≀≀—— INDICATES BREAK POINTS USED TO REDUCE DIAGRAM CLUTTER. TO FIND MATING END OF BROKEN LINE PROCEED FROM BREAK POINT IN PARALLEL WITH DIAGRAM BORDER.

G. ▭ INDICATES FRONT PANEL MARKING.

H. * SELECTED VALUE (NOMINAL VALUE SHOWN). REFER TO CHAPTER 7 PARTS LIST FOR PART NUMBERS AND RANGE OF VALUES.

I. ——▶—— INDICATES SIGNAL FLOW; ——◀◀—— INDICATES FEEDBACK.

NOTES FOR FIGURE 5-32 (CONTINUED)

PART LOCATION INDEX

REF. DES.	ZONE
A1E1	3J
J1 thru J22	*
J23	23C
J24	79B
J25	23C
P1	20J,22F, 81K,22C 81B
P2	22C,81B
A1A1C1	22F
C2	80D
C3	22E
C4	80F
C5	80D
C6	80C
C7	80E
C8	80J
C9	80H
C10	22J
C11	22H
C12	22H
C13	22E
C14	22F
C15	80F
E1	22J
J1	*
J2	*
J3	23J
J4	23F,79B, C,H,K
J5	79J
J6	79D
A1A1A1RV1	23H
RV2	23H
RV3	23H
A1A2	21G
A2C1	12H
C2	12F
C3	*
C4	58D
C5	6B
CR1	*
A2CR2 thru CR4	*
CR5	6J
CR6	*
CR7	*
CR8	7J
CR9	15G
CR10	6C
E1 thru E5	*
E6	7H
E7	42B
E8	38F
E9	39F,49F
E10	12F;13H
E11	12D
E12	12G
E13	67J
E14	*
E15	3G
E16	41E
E17	12J
E18	67G
E19/E19A	5B,6B, 16J,18D, 67C
E20	4D
E21	6D,58G, 59E,60J 67G,H,J; 83D,H,
E22	6D,61J, 83D
E23	82H
E24	*
E25	28H
E26	83J
E27	6E
E28	6E,20H, 82C
E29	59D
E30	5B,58B
A2E31	4B,31A 53C,55C 58B,83C
E32	4D,58C
E33	83B
E34	4B,55B
E35	4B,55B, 58C,83F,84F 84F
E36	83C
E37	12C
E38	31B
E39	32C,C 35A,C; 35B
E40	32B,C; 35B
E41	16G
E42	12H
E43	12H
E44	38F
E45 thru E48	*
E49	42H
E50 thru E52	*
E53	21C
A2FL1	35C
FL2	35D
FL3	49G
J1	54E
J2	54F
J3 thru J7	*
J8	42B,D
J9 thru J20	*
J21	20J,81K
J22	21C,50G, 81B

* NOT USED

NOTES FOR FIGURE 5-32 (CONTINUED)

PART LOCATION INDEX (CONTINUED)

REF. DES.	ZONE	REF. DES.	ZONE	REF. DES.	ZONE
A2J23	4G,7F,	A2XA2P1	4D,5E,	A2A9R9	44F
	19J,55H,		61K,66K	R10	44J
	60B,G;	A2A3P1	4E,56D,	A2A10C1	36J
	66B,73J		57D	C2	35G
	75E	A2XA3P1	56D,57D	C3	35H
J24	11J,5G,	A2A4P1	42G;	C4	35G
	7G,55D,	P2	37G,J;	C5	35H
	60E,66G,		42H	C6	34G
	84F	A2XA4P1	42G,J	C7	33H
L1	13J	P2	37G,J	CR1	35J
L2	15G		42J	CR2	35G
L3	38F	A2A5P1	33D,34D	CR3	34J
P1 thru P24	*	A2XA5P1	32D,34D	CR4	34G
		A2A6P1	29E,30F	CR5	33G
		P2	29J	E1**	32G
P25	13F,16F,J	P3	30H	E2**	35F
R1 thru R7	*	A2XA6P1	29E,31F	E3**	32H
		P2	29J	E4**	32H
		P3	31H	E5**	36J
R8	12F	A2A7P1	42B,D	E6**	36H
R9 thru R19	*	A2A9C1	48G	L1	35G
		C2	47G	L2	35J
		C3	47F	L3	35H
R20	12H	C4	46F	L4	34H
R21	*	CR1	47G	L5	34G
R22	*	CR2	47H	L6	33H
R23	72J	E1**	48G	R1	35F
R24	*	E2**	43H,48F	R2	33G
R25	*	E3**	43H	R3	33H
R26	5B,83KJ	E4**	43H	A2A13C1	15E
R27	5E,D;	E5**	48F	C2	14E
T1	17K	E6**	48H	C3	15C
U1	6B	K1	44G	CR1	16H
A2A1P1	68E,G,K;	Q1	46G	CR2	15H
	69K	Q2	44G	CR3	16H
P2	67C,F,J;	R1	47G	CR4	15H
	68B,F,J;	R2	47F	CR5	16D
	69J	R3	46G	CR6	14D
A2XA1P1	68E,G,K;	R4	45H	CR7	14D
	69K	R5	45F	CR8	16F
P2	67C,F,J	R6	45G	CR9	15G
A2A2P1	5E,D;	R7	45G	CR10	16E
	61K,66K	R8	43G	CR11	15E

* NOT USED
** WIRING TERMINATIONS - FOR REFERENCE ONLY

NOTES FOR FIGURE 5-32 (CONTINUED)

PART LOCATION INDEX (CONTINUED)

REF. DES.	ZONE
A2A13CR12	14E
CR13	14E
J1	13F,J;
	16F,J,
K1	15C-E
K2	14C-D
R1	14F
R2	13F
R3	15E
R4	15E
R5	15B
R6	15B
A2A14CR1 thru CR4	*
CR5	6H
CR6	*
CR7	*
CR8	7H
DS1	*
DS2	*
DS3	11F
DS4	11E
DS5	70F
E1	19E,19H
E2	54E
E3	6H
E4	54C,H
E5	3H
E6	7H
E7	42B
E8	11E
E9	*
E10	12C,H;
	65G
E11	*
E12	66G
E13	*
E14	60E,65B
F1	21F
F2	20F
J1	54E
J2	54F

REF. DES.	ZONE
A2A14J3	85F
J4	7J,19J
	60G,65G
M1	93G
P1	4G,7F,
	19J,55H
	60B,G;
	66B,73J,
	84F
P2	5G,7G
	18F,53C,
	55D,66G,
	84F
R1	54C
R2	54H
R3	5H
R4	54D
R5	54G
R6	66B
R7	*
R8	*
R9	53F
R10	53E
R11 thru R13	*
R14	6H
R15 thru R18	*
R19	65B
R20 thru R24	*
R25	5H
S1	*
A2A14S2A-F	18H,62C
S2A-R	8E,62D
S2A-F	18J
S2B-R	8J,64C
S2C-F	8G,62F
S2C-R	64D
S2D-F	8D

REF. DES.	ZONE
A2A14S2D-R	8B,64F
S3	3H
XDS1	*
XDS2	*
XDS3	11F
XDS4	11E
XDS5	70F
XF1	19E
XF2	19F
A2A14A11R1	74F
S1A-F	71C
S1A-R	71A
S1B-F	73C
S1B-R	73B
A2A14A11A1C1	73G
C2	72F
C3	*
C4	72G
CR1	72G
CR2	72F
E1**	73F
E2**	73F
E3**	73F
E4**	*
E5**	71F
E6**	72H
E7**	72H
E8**	71G
E9**	71G
A2A14A11A1R1	73G
R2	73G
R3	73F
R4	72G
R5	*
R6	72G
R7	72G
A2A14A12C1	91G
C2	92F
C3	91E
CR1 thru CR4	91G
CR5	92E

* NOT USED
** WIRING TERMINATIONS - FOR REFERENCE ONLY

NOTES FOR FIGURE 5-32 (CONTINUED)

PART LOCATION INDEX (CONTINUED)

A2A14A12P1	85F,92H	A2A14A12R7	87F	R13	85E
R1	92F	R8	85F	R14	86D
R2	90G	R9	85F	S1	88D-H
R3	90E	R10	86E	U1A	91F
R4	90H	R11	87E	U1B	86F
R5	90G	R12	85E	U1C	86E-H
R6	*				

* NOT USED

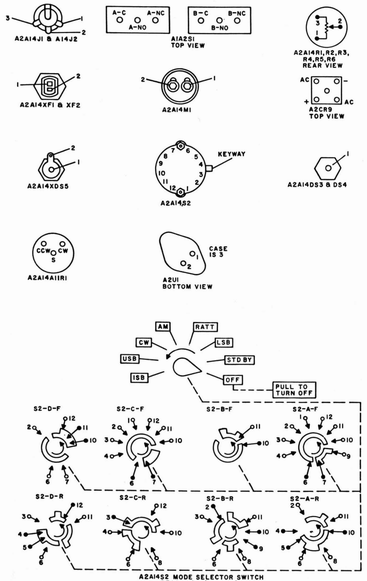

TERMINAL DIAGRAMS

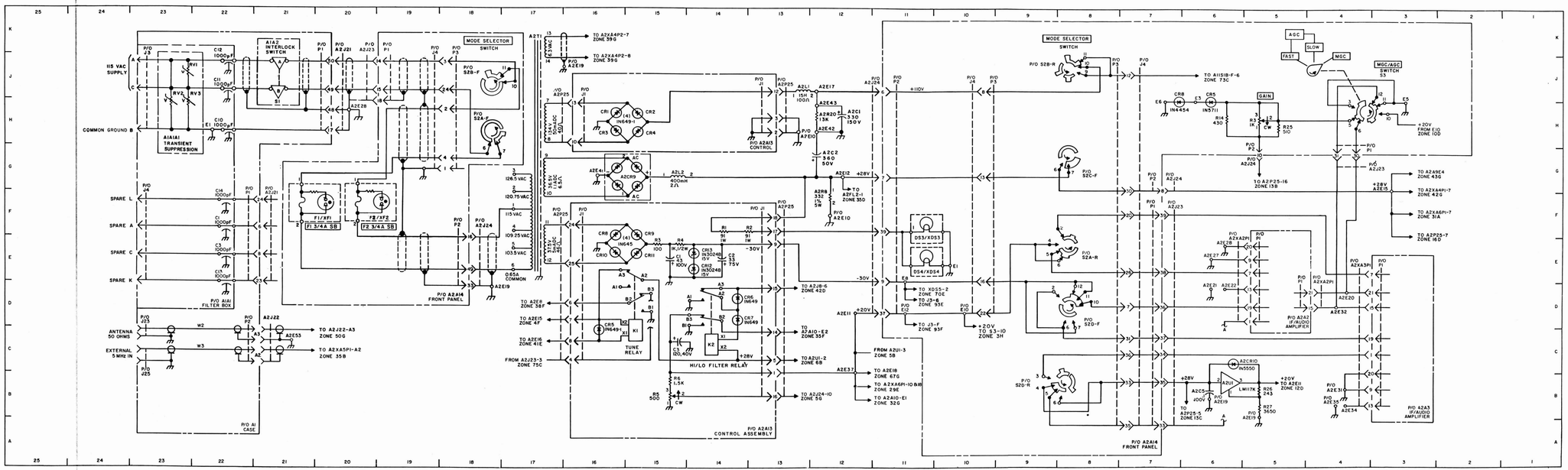

Figure 5-32. Receiver Case A1 and Chassis/Panel Assembly A2/A2A14, Maintenance Schematic Diagram (Sheet 1 of 4)

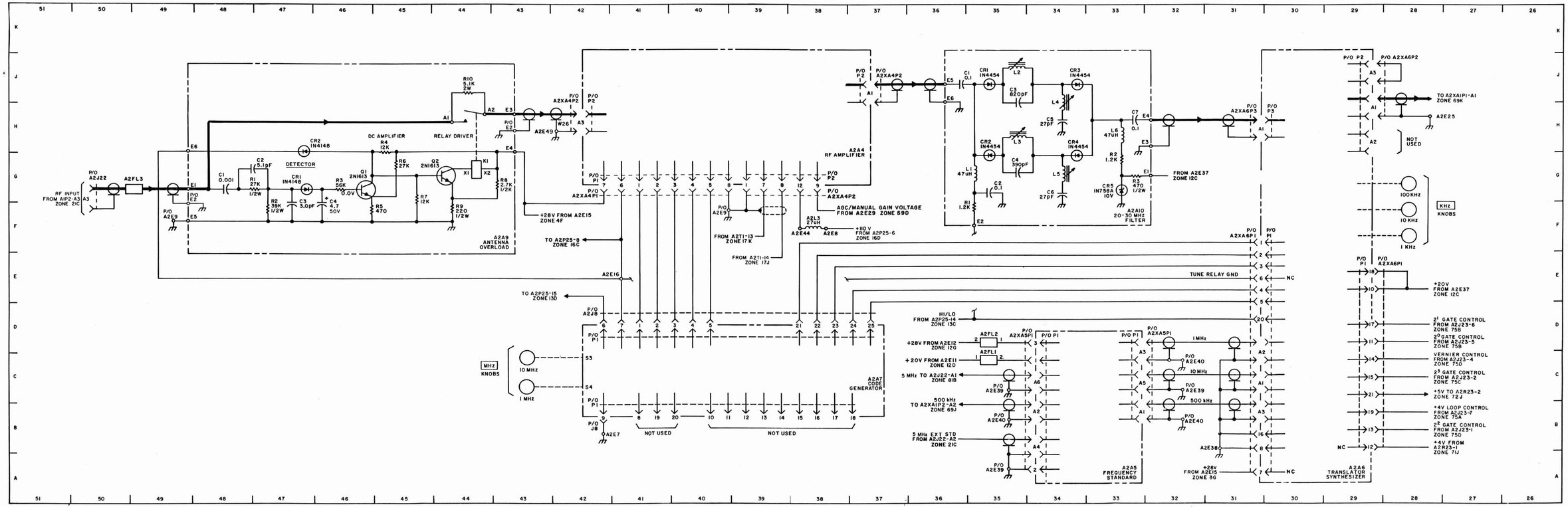

Figure 5-32. Receiver Case A1 and Chassis/Panel Assembly A2/A2A14, Maintenance Schematic Diagram (Sheet 2 of 4)

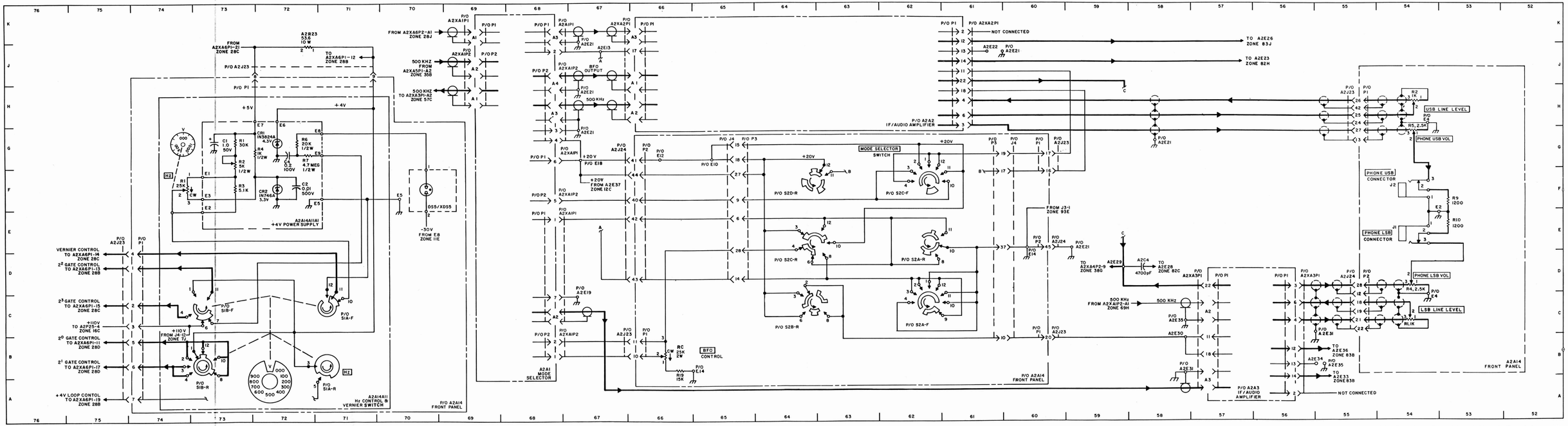

Figure 5-32. Receiver Case A1 and Chassis/Panel Assembly A2/A2A14, Maintenance Schematic Diagram (Sheet 3 of 4)

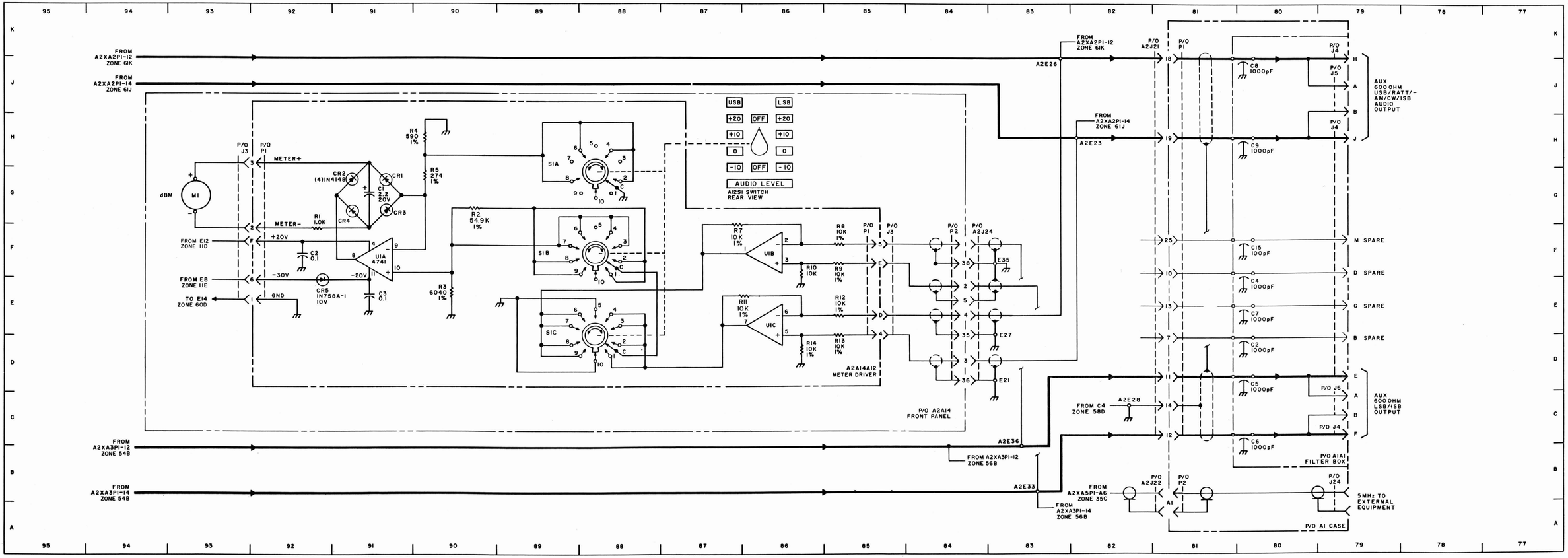

Figure 5-32. Receiver Case A1 and Chassis/Panel Assembly A2/A2A14, Maintenance Schematic Diagram (Sheet 4 of 4)

NOTES FOR FIGURE 5-33

GENERAL NOTES

A. PARTIAL REFERENCE DESIGNATIONS ARE SHOWN. FOR COMPLETE DESIGNATION, PREFIX PARTIAL REFERENCE DESIGNATORS WITH APPLICATION UNIT, ASSEMBLY, AND/OR SUBASSEMBLY DESIGNATORS.

B. UNLESS OTHERWISE SPECIFIED:
ALL RESISTORS ARE IN OHMS ±5%, 1/4 WATT, K = 1000.
ALL CAPACITORS ARE IN MICROFARADS (PF = PICOFARADS).
ALL COIL RESISTANCES ARE LESS THAN ONE OHM.

C. ——~~——— INDICATES A BREAK POINT USED TO REDUCE DIAGRAM CLUTTER. TO FIND MATING END OF BROKEN LINE, PROCEED IN PARALLEL WITH DIAGRAM BORDER.

D. ——▶——— INDICATES SIGNAL FLOW.

E. READINGS IN TABLE ARE ACCURATE TO WITHIN ±10%.

SPECIFIC NOTES

1. CONTROL VOLTAGE (CHART 1)

PIN	LSB	RATT	AM	CW	USB	ISB
P1-1	GND	+20V	GND	GND	+20V	+20V
P1-2	GND	GND	+20V	+20V	GND	GND
P2-2	-	-	-	+20V	-	-
P2-5	+20V	+20V	-	-	+20V	+20V
V_s(A2A1A2)	+10V	+10V	+6.7V	+6.7V	+10V	+10V

2. FILTERS A2A1FL1, -FL2 AND -FL3 ARE FERRITE BEAD PARASITIC SUPPRESSORS. TERMINATION FOR THESE FILTERS IS AS FOLLOWS:

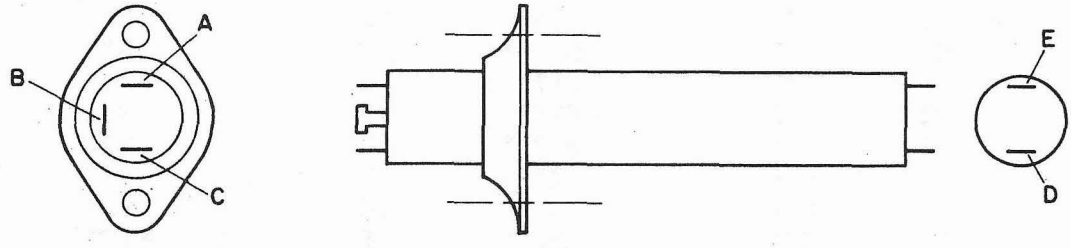

NOTES FOR FIGURE 5-33 (CONTINUED)

PART LOCATION INDEX

REF. DES.	ZONE	REF. DES.	ZONE	REF. DES.	ZONE
A2A1C1	8H	A2A1A1C11	5G	A2A1A1Q1	11J
C2	7G	C12	6F	Q2	10J
C3	8H	C13	4F	Q3	11F
E1	8H	C14	5H	Q4	11F
E2	8H	C15	5J	Q5	5J
E3	8J	C16	5G	Q6	5G
E4	8F,G	C17	6J	Q7	5F
E5	7H	C18	9H	R1	12H
E6	8G	C19	9F	R2	12J
E7	8H	C20	7F	R3	12H
FL1	9H	C21	7J	R4	11K
FL2	9G	C22	12G	R5	11H
FL3	9F	C23	9G	R6	11J
P1-1	14K	CR1	10K	R7	11H
P1-2	14H	CR2	12H	R8	12H
P1-3		CR3	6G	R9	10J
thru	*	CR4	8K	R10	10H
P1-5		E1**	9J	R11	11H
P1-6	14F	E2**	9H	R12	10G
P1-7	14E	E3**	8J	R13	5F
P1-A1	14J	E4**	9G	R14	11G
P1-A2	2F	E5**	10G	R15	11F
P1-A3	2H	E6**	10G	R16	6J
P2-1	14D	E7**	13E	R17	5J
P2-2	14E	E8**	9F	R18	5J
P2-3	14C	E9**	9F	R19	6H
P2-4	14A	E10**	13J	R20	5H
P2-5	14B	E11**	13J	R21	6H
P2-A1	2C	E12**	13H	R22	5H
P2-A2	14B	E13**	13F	R23	5G
P2-A3	2B	E14**	13K	R24	6F
P2-A4	2D	E15**	7F	R25	5F
R1	8H	E16**	7J	R26	6G
A2A1A1C1	12K	E17**	7G	R27	7H
C2	12J	E18**	7F	R28	6G
C3	11J	E19**	3F	R29	6G
C4	11J	E20**	3H	R30	5F
C5	10J	E21**	3G	TP1	12J
C6	11G	E22**	3F	A2A1A2C1	12B
C7	10G	E23**	7G	C2	12B
C8	11F	E24**	7H	C3	10B
C9	10F	E25	10K	C4	10B
C10	4H	E26	6J	CR1	11B

* NOT USED
** WIRING TERMINATIONS - FOR REFERENCE ONLY

NOTES FOR FIGURE 5-33 (CONTINUED)

PART LOCATION INDEX (CONTINUED)

REF. DES.	ZONE	REF. DES.	ZONE	REF. DES.	ZONE
A2A1A2E1**	9B	A2A1A3C5	9C	A2A1A3R1	12D
E2**	9B	C6	9C	R2	11D
E3**	13A	C7	8D	R3	10D
E4**	13C	C8	7D	R4	10D
E5**	13B	C9	7D	R5	9D
E6**	13B	C10	6D	R6	9D
E7**	13B	CR1	12D	R7	8D
R1	12A	E1**	13D	R8	8D
R2	12B	E2**	13C	R9	7D
R3	12B	E3**	13E	R10	6D
R4	11B	E4**	4D	R11	7D
R5	10B	E5**	4D	R12	12E
R6	10B	L1	11D	R13	6E
A2A1A3C1	12D	Q1	9D	R14	6D
C2	11D	Q2	7D	T1	6C
C3	11D	Q3	6D	TP1	5D
C4	11D				

** WIRING TERMINATIONS - FOR REFERENCE ONLY

TRANSISTOR VOLTAGE CHART

	E	B	C	
A2A1A1Q1	+9.1V	+9.7V	+9.5V	
A2A1A1Q2	+15.5V	+14.9V	+3.8V	
A2A1A1Q3	+7.6V	+14.9V	0V	
A2A1A1Q4	+15.5V	+14.9V	+4.5V	USB MODE
A2A1A1Q5	+2.5V	+3.1V	+12.5V	
A2A1A1Q6	+2.6V	+3.2V	+12.5V	
A2A1A1Q7	+6.4V	+7.0V	+19.6V	
A2A1A1Q1	+9.1V	+9.7V	+9.5V	
A2A1A1Q2	+7.2V	+15.0V	0V	
A2A1A1Q3	+15.7V	+15.0V	+3.9V	
A2A1A1Q4	+15.7V	+15.0V	+4.4V	CW MODE
A2A1A1Q5	+2.5V	+3.1V	+12.5V	
A2A1A1Q6	+2.6V	+3.2V	+12.5V	
A2A1A1Q7	+6.4V	+7.0V	+19.6V	

NOTES FOR FIGURE 5-33 (CONTINUED)

TRANSISTOR VOLTAGE CHART (CONTINUED)

	E	B	C	
A2A1A3Q1	+16.3V	+16.5V	0	
A2A1A3Q2	+12.3V	+11.7V	0	CW MODE
A2A1A3Q3	+1.1V	+0.3V	0	

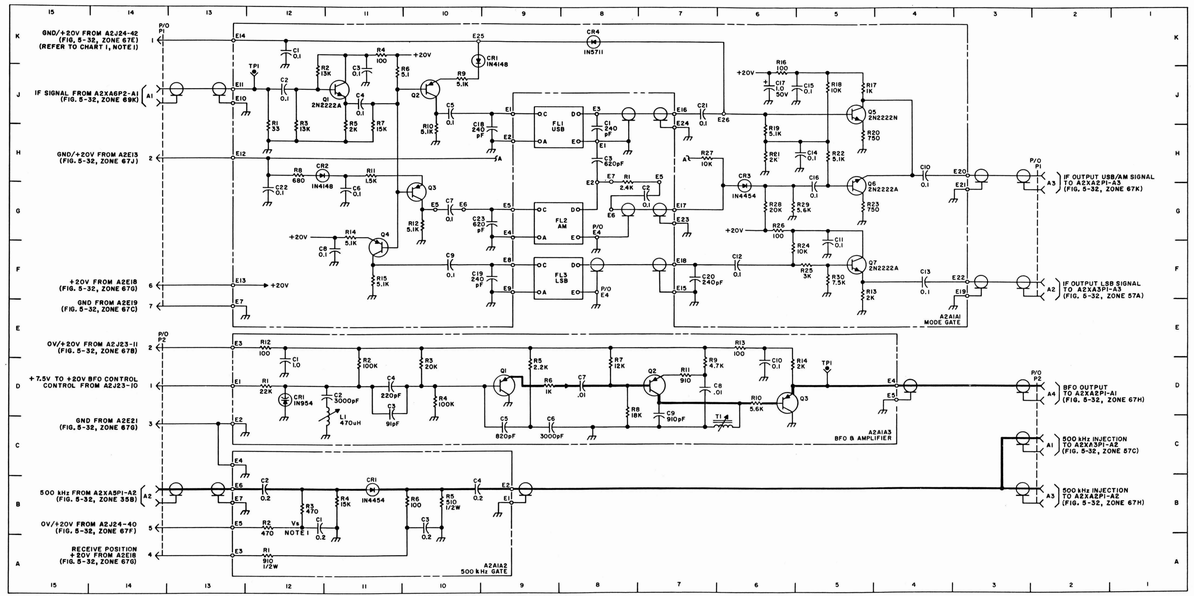

Figure 5-33. Receiver Mode Selector Assembly A2A1, Maintenance Schematic Diagram

NOTES FOR FIGURE 5-34

GENERAL NOTES

A. PARTIAL REFERENCE DESIGNATIONS ARE SHOWN. FOR COMPLETE DESIGNATIONS PREFIX WITH NUMBERS OF NEXT ASSEMBLY.

B. UNLESS OTHERWISE SPECIFIED:
   1. ALL RESISTANCE IS IN OHMS, K = 1000, M = 1,000,000
      ALL RESISTORS ARE 1/4 WATT, ±5%
   2. ALL CAPACITORS ARE IN MICROFARADS, PF = PICOFARAD.
   3. ALL COIL RESISTANCES ARE LESS THAN 1 OHM.

C. CW ON POTENTIOMETER INDICATES DIRECTION OF ROTATION WHEN VIEWED FROM SHAFT END.

D. WHEN MAKING RESISTANCE MEASUREMENTS AT TRANSISTOR POINTS, USE HIGHEST POSSIBLE OHMMETER RANGE TO PREVENT DAMAGE TO TRANSISTORS.

E. REFER TO BASE DIAGRAMS FOR TRANSFORMER ORIENTATION.

F. ALL AC VOLTAGE MEASUREMENTS TAKEN WITH RF MILLIVOLTMETER, 04901-92B-S5, USING 04901-91-7C 100:1 VOLTAGE DIVIDER PROBE, AS REQUIRED.

G. —⌇— INDICATES BREAK POINTS USED TO REDUCE DIAGRAM CLUTTER. TO FIND MATING END OF BROKEN LINE PROCEED FROM BREAK POINT IN PARALLEL WITH DIAGRAM BORDER.

H. —▶— INDICATES SIGNAL FLOW.

I. —◀◀— INDICATES FEEDBACK.

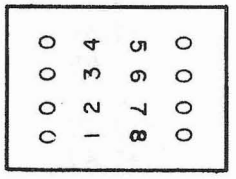

A2A2T1 AND A2A3T1

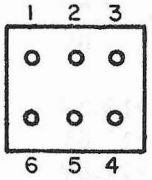

A2A2A3T1 AND A2A3A3T1
A2A2A2T5 AND A2A3A2T5

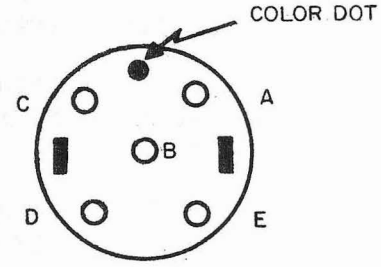

A2A2A1T1, A2A3A1T1, A2A2A1T2,
A2A3A1T3, A2A2A2T1 THRU T4
AND A2A3A2T1 THRU T4

TRANSFORMER BASE DIAGRAMS

NOTES FOR FIGURE 5-34 (CONTINUED)

SPECIFIC NOTES

1. SET MODE SELECTOR A2A14S2 TO USB POSITION. SET FREQUENCY TO 2.010 MHz. INPUT TO ANTENNA CONNECTOR A1J23; 1 mVRMS, CW. MGC/AGC SWITCH A2A14S3: FAST, UNLESS OTHERWISE INDICATED.

TEST POINT	VOLTAGE		TEST POINT	VOLTAGE	
A1Q1-E	+4.5V		A1Q12-E	0V	
A1Q1-B	+3.8V		A1Q12-B	+0.6V	(AGC
A1Q1-C	-10.1V		A1Q12-B	+0.1V	SLOW)
A1Q2-E	+9.3V		A1Q13-E	+20.0V	
A1Q2-B	+8.7V		A1Q13-B	+19.3V	
A1Q2-C	+3.8V		A1Q13-C	+19.9V	
A1Q3-E	+1.0V		A1Q14-E	+18.4V	AM
A1Q3-B	+1.7V		A1Q14-B	+18.3V	ONLY
A1Q3-C	+8.7V		A1Q14-C	+0.2V	
A1Q4-E	+1.7V		A2Q1-E	+8.1V	
A1Q4-B	+2.2V		A2Q1-B	+7.5V	
A1Q4-C	+18.9V		A2Q1-C	0V	
A1Q6-E	+2.2V		A2Q2-E	+0.1V	
A1Q6-B	+2.7V		A2Q2-B	+0.8V	
A1Q6-C	0V		A2Q2-C	+14.5V	
A1Q7-E	+5.7V		A2Q3-E	0V	
A1Q7-B	+5.0V		A2Q3-B	+0.6V	
A1Q7-C	0V		A2Q3-C	+0.1V	
A1Q8-E	+8.5V		A2Q4-E	+8.2V	
A1Q8-B	+7.9V		A2Q4-B	+7.6V	
A1Q8-C	0V		A2Q4-C	0V	
A1Q9-E	+1.0V		A2Q5-E	+8.4V	
A1Q9-B	+1.6V	AM	A2Q5-B	+7.8V	
A1Q9-C	+18.3	ONLY	A2Q5-C	0V	
A1Q10-E	0V	(AGC	A2Q6-E	+8.3V	
A1Q10-B	+0.6V	SLOW)	A2Q6-B	+7.7V	
A1Q10-C	0V		A2Q6-C	0V	
A1Q11-E	0V	(AGC	A2Q7-E	+18.2V	
A1Q11-B	+0.1V	SLOW)	A2Q7-B	+17.6V	
A1Q11-C	+0.6V		A2Q7-C	+11.8V	

NOTES FOR FIGURE 5-34 (CONTINUED)

SPECIFIC NOTES (CONTINUED)

TEST POINT	VOLTAGE	TEST POINT	VOLTAGE
A2Q8-E	+12.4V	A3Q1-E	+17.5V
A2Q8-B	+11.8V	A3Q1-B	+16.9V
A2Q8-C	+5.7V	A3Q1-C	+1.6V
A2Q9-E	+27.2V	A3Q2-E	+17.5V
A2Q9-B	+26.6V	A3Q2-B	+16.9V
A2Q9-C	0V	A3Q2-C	+1.7V
A2Q10-E	+27.2V	A3Q3-E	+17.7V
A2Q10-B	+26.6V	A3Q3-B	+0V
A2Q10-C	0V	A3Q3-C	0V

VOLTAGE MEASUREMENTS TAKEN TO GROUND WITH MULTIMETER 55026-260-6XLP.

TEST POINT	MEASUREMENT
A2E10	+20V
A2E3	+20V
A2E19	0V
A1E10	+1 TO +2 (NOTE 5)
A1TP2	-10V
A1TP1	+1V
A1E7	20 V (AM ONLY)

2. SET MODE SELECTOR A2S2 TO USB POSITION FOR MEASUREMENTS AT TERMINALS OF A2A2T1; TO LSB POSITION FOR MEASUREMENT AT TERMINALS OF A2A3T1. INPUT TO ANT CONNECTOR A1J23: 3 UV, MGC/AGC SWITCH A2A14S3: MGC. GAIN POT. FULLY CW (MAX RF GAIN).

TEST POINT		MEASUREMENT
A2A2/A2A3 T1 TERMINAL	4	15 VRMS
	5	0 VRMS
	6	15 VRMS
	7	8 VRMS

3. DC RESISTANCE MEASUREMENTS OF TRANSFORMER WINDINGS. RESISTANCES BETWEEN TERMINALS NOT LISTED ARE LESS THAN ONE OHM. RESISTANCES SHOWN ARE ±10%.

NOTES FOR FIGURE 5-34 (CONTINUED)

TERMINALS	RESISTANCE (OHMS)
A2A2/A2A3 T1 1-3	110
4-6	14
7-8	35
	12
A2A2/A2A3 A1T1 A-D	12
A-C	9
B-E	4.5
C-E	3
A2A2/A2A3 A1T2 C-D	2.5
A2T5 1-3	1.6K
4-5	30
A3T1 1-3	1.6K
4-6	60

PART LOCATION INDEX

REF. DES.	ZONE	REF. DES.	ZONE	REF. DES.	
A2A2P1-1	20H	A2A2P1-22	4E	A2A2A1C9Q	10C
P1-2	4E	P1-A1	20A	C10	9C
P1-3	4F	P1-A2	20B	C11	9D
P1-4	4F	P1-A3	20G	C12	12D
P1-5	20E	T1	6G	C13	12C
P1-6	20G	T1-1	6G	C14	*
P1-7	20H	T1-2	6G	C15	19C
P1-8	20E	T1-3	6F	C16	3B
P1-9	20F	T1-4	6G	CR1	19D
P1-10	20E	T1-5	6G	CR2	17D
P1-11	20A	T1-6	6G	CR3	17D
P1-12	4G	T1-7	6G	CR4	12C
P1-13	4G	T1-8	6F	CR5	11D
P1-14	4G	A2A2A1C1	*	E1**	20D
P1-15	20B	C2	16C	E2**	19E
P1-16	20E	C3	15C	E3**	20C
P1-17	4E	C4	8B	E4**	20C
P1-18	20B	C5	12C	E5**	4B
P1-19	20D	C6	20B	E6**	3E
P1-20	20C	C7	11D	E7**	3E
P1-21	20D	C8	11C	E8**	9E

** WIRING TERMINATIONS - FOR REFERENCE ONLY

NOTES FOR FIGURE 5-34 (CONTINUED)

PART LOCATION INDEX (CONTINUED)

REF. DES.	ZONE	REF. DES.	ZONE	REF. DES.	ZONE
A2A2A1E9**	20B	A2A2A1R26	9C	A2A2A2C22	8F
E10**	20D	R27	4C	C23	7G
E11**	8C	R28	3C	C24	6F
E12**	17E	R29	3C	C25	19F
Q1	19D	R30	4B	C26	10F
Q2	17C	R31	15D	CR1	17F
Q3	16C	R32	14C	E1**	20G
Q4	15C	R33	14C	E2**	20G
Q5	*	R34	14C	E3**	20F
Q6	12D	R35	13C	E4**	18E
Q7	10C	R36	14D	E5**	6F
Q8	9C	R37	14D	E6**	20F
Q9	3B	R38	14C	E7**	6F
Q10	14C	R39	3B	E8**	20G
Q11	14C	R40	3B	E9**	6F
Q12	13C	R41	12D	E10**	20H
Q13	13D	R42	9C	E11**	6G
Q14	3B	RT1	12C	E12**	6F
R1	20D	T1	11C	E13**	6G
R2	19D	T2	10C	E14**	20H
R3	19D	TP1	16D	E15**	11E
R4	19C	TP2	19D	E16**	12E
R5	19C	A2A2A2C1	19G	E17**	11E
R6	19C	C2	19G	E18**	11E
R7	18D	C3	19G	E19**	15E
R8	17D	C4	18G	E20**	14E
R9	17C	C5	18G	L1	20F
R10	16D	C6	17F	Q1	19G
R11	16D	C7	17G	Q2	17F
R12	16D	C8	16F	Q3	17G
R13	12C	C9	15G	Q4	16G
R14	*	C10	14G	Q5	14G
R15	12C	C11	14F	Q6	12G
R16	12C	C12	14G	Q7	10G
R17	*	C13	13G	Q8	8G
R18	11D	C14	12F	Q9	7G
R19	11C	C15	12G	Q10	7F
R20	10D	C16	11F	R1	19G
R21	10C	C17	10G	R2	19F
R22	9D	C18	10G	R3	19G
R23	9D	C19	9F	R4	*
R24	4B	C20	9F	R5	18G
R25	9D	C21	8G	R6	18F

* NOT USED
** WIRING TERMINATIONS - FOR REFERENCE ONLY

NOTES FOR FIGURE 5-34 (CONTINUED

PART LOCATION INDEX (CONTINUED)

REF. DES.	ZONE	REF. DES.	ZONE	REF. DES.	ZONE
A2A2A2R7	17F	A2A2A2R33	8F	A2A2A3E3**	4B
R8	18G	R34	8G	E4**	7B
R9	R10	R35	7G	E5**	7B
R10	16G	R36	7G	E6**	7A
R11	16F	R37	6G	E7**	5E
R12	16G	R38	17G	E8**	7E
R13	15F	R39	17G	E9**	7A
R14	14G	R40	7G	E10**	7C
R15	14F	RT1	18G	E11**	7C
R16	14G	T1	19F	E12**	7D
R17	14G	T2	15F	E13**	7C
R18	13F	T3	14F	L1	5B
R19	12G	T4	12F	Q1	7D
R20	12F	T5	8G	Q2	7C
R21	12G	A2A2A3C1	7D	Q3	5B
R22	12G	C2	7C	R1	7D
R23	11F	C3	7C	R2	6D
R24	11G	C4	7B	R3	7B
R25	11F	C5	5C	R4	6B
R26	10G	C6	5B	R5	5C
R27	10G	C7	5B	R6	4B
R28	10F	C8	6A	R7	5C
R29	10F	CR1	5C	T1	6C
R30	9F	CR2	5B	TP1	7D
R31	9G	E1**	5E	A2A3's	Identical to A2A2's
R32	9G	E2**	7B		

** WIRING TERMINATIONS - FOR REFERENCE ONLY

4. TRANSISTORS A2A2Q1, A2A2Q4, A2A2Q6, A2A3Q7, A2A3Q8 HAVE THE CASE GROUNDED AS AN RF SHIELD. CASES ARE AT AC GROUND ONLY.

5. MGC/AGC: MGC; GAIN POTENTIOMETER FULLY CW (MAXIMUM RF GAIN).

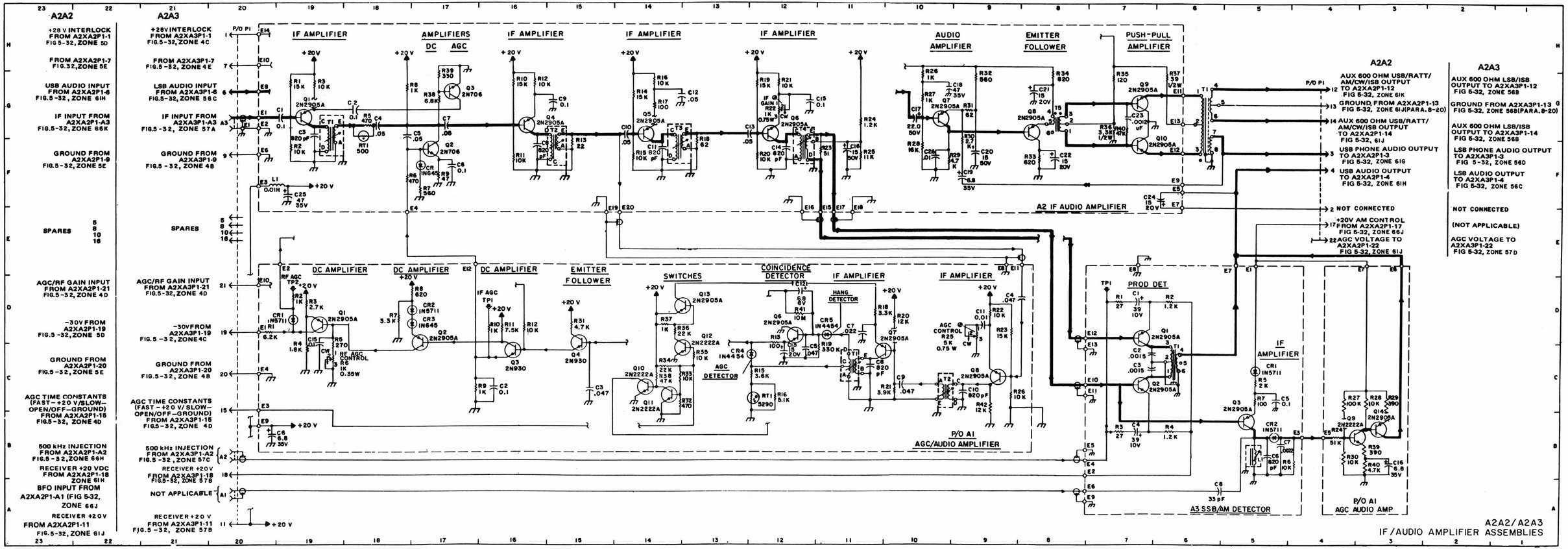

Figure 5-34. Receiver IF/Audio Amplifier Assemblies A2A2 and A2A3, Maintenance Schematic Diagram

NOTES FOR FIGURE 5-35

GENERAL NOTES

A. PARTIAL REFERENCE DESIGNATIONS ARE SHOWN. FOR COMPLETE DESIGNATION PREFIX WITH NUMBERS OF NEXT HIGHER ASSEMBLY.

B. UNLESS OTHERWISE SPECIFIED:
ALL RESISTORS ARE IN OHMS, ±5%, 1/4 WATT. K = 1000
ALL CAPACITORS ARE IN PICOFARADS. UF = MICROFARADS.
RESISTANCE OF ALL COIL WINDINGS LESS THAN ONE OHM.

C. WHEN MAKING RESISTANCE MEASUREMENTS AT TRANSISTOR POINTS, USE HIGHEST POSSIBLE OHMMETER RANGE TO PREVENT DAMAGE TO TRANSISTORS.

D. ——▶—— INDICATES SIGNAL FLOW.

E. ——∿—— INDICATES BREAK POINTS USED TO REDUCE DIAGRAM CLUTTER. TO FIND MATING END OF BROKEN LINE PROCEED IN PARALLEL WITH DIAGRAM BORDER.

VACUUM TUBE VOLTAGE CHART						
	1	2	BETWEEN PINS 3 AND 4	5	6	7
V1	0	+1.6 V	6.3 VAC	+103 V	+103 V	0 V
V2	0	+4.3 V	6.3 VAC	+104 V	+104 V	+4.3 V

NOTE

VOLTAGE MEASUREMENTS TAKEN TO GROUND (UNLESS OTHERWISE INDICATED) USING MULTIMETER 55026-260-6XLP, WITH VACUUM TUBES ON EXTENDERS AND RECEIVER CONTROLS SET AS FOLLOWS:

CONTROL	SETTING
FREQUENCY	3.0 MHZ
MODE	LSB
MGC/AGC	MGC
GAIN	MAXIMUM CLOCKWISE

NOTES FOR FIGURE 5-35 (CONTINUED)

PART LOCATION INDEX

REF. DES.	ZONE	REF. DES.	ZONE	REF. DES.	ZONE
A2A4B1	20D	A2A4E6-D	16D	A2A4P1-3	24E
C1,C2	11F	E7-A	16C	P1-4	24E
C3	10F	E7-B	18C	P1-5	24E
C4	9E	E7-C	17B	P1-6	24F
C5	9G	E7-D	20B	P1-7	24D
C6	6H	E8-A	6D	P1-8	24C
C7	7J	E8-B	*	P2-1	24B
C8	18C	E8-C	*	P2-2	24G
C9	18C	E8-D	5D	P2-3	
C10	11D	E9-A	18D	thru	*
C11	6E	E9-B	*	P2-6	
C12	6D	E9-C	*	P2-7	24C
C13	6C	E9-D	18D	P2-8	24B
C14	6B	E10-A	18C	P2-9	24A
C15	24C	E10-B	*	P2-10	24G
C16	24B	E10-C	*	P2-11	24F
C17	23C	E10-D	19C	P2-12	24B
C18	23B	E11-A	7D	P2-A1	2J
C19	18D	E11-B	5D	P2-A2	24A
C20	18D	E11-C	6D	P2-A3	24G
C21	20C	E11-D	4D	P2-A4	*
C22	21D	E12-A	5C	P2-A5	24J
CR1	21D	E12-B	*	R1	11F
E1-A	16E	E12-C	*	R2	10F
E1-B	16F	E12-D	6C	R3	10E
E1-C	16F	E13-A	4C	S1	22D-F
E1-D	14E	E13-B	6C	TP1	8J
E2-A	*	E13-C	5B	TP2	8J
E2-B	13E	E13-D	7B	TP3	3K
E2-C	12F	FL1	12F	TP4	3K
E2-D	14E	FL2	8H	V1	10F
E3-A	6F	FL3	6J	V2	7J
E3-B	4G	K1	21E	A2A4A1C1	11E
E3-C	6G	K1-A1	21D	C2	10E
E3-D	6F	K1-A2	21D	C3	7H
E4-A	4J	K1-A3	21D	C4	9E
E5-A	4J	K1-B1	21D	E1**	12D
E5-B	6J	K1-B2	21B	E2**	10E
E5-C	6J	K1-B3	21C	E3**	9C
E5-D	4J	K1-X1	21D	E4**	7H
E6-A	20C	K1-X2	21E	E5**	12D
E6-B	17C	P1-1	24F	E6**	9B
E6-C	18D	P1-2	24E	E7**	7G

* NOT USED
** WIRING TERMINATION - FOR REFERENCE ONLY

NOTES FOR FIGURE 5-35 (CONTINUED)

PART LOCATION INDEX (CONTINUED)

REF. DES.	ZONE	REF. DES.	ZONE	REF. DES.	ZONE
A2A4A1E8**	10B	A2A4A2C3 thru A2A4A8C3	13F	A2A4A2T2 thru A2A4A8T2	14F
E9	11D	A2A4A9C3	10H	A2A4A9T2	10H
E10	11E	A2A4A10C3	10H	A2A4A10T2	10H
R1	11E	A2A4A11C3	13F	A2A4A11T2	14F
R2	10E	A2A4A12C3	13C	A2A4A12T2	14C
R3	10E	A2A4A13C3	13C	A2A4A13T2	14C
R4	9C	A2A4A14C3 thru A2A4A18C3	13F	A2A4A14T2 thru A2A4A18T2	14F
R5	7H	A2A4A19C3	11H	A2A4A19T2	10H
R6	9B	A2A4A20C3	13H	A2A4A20T2	14H
A2A4A2C1 thru A2A4A8C1	14E	A2A4A21C3	13H	A2A4A21T2	14H
A2A4A9C1	11J	A2A4A22C3 thru A2A4A29C3	13F	A2A4A22T2 thru A2A4A29T2	14F
A2A4A10C1	11J	A2A4A2C4 thru A2A4A29C4	4G	A2A4A2T3 thru A2A4A29T3	5F
A11C1	14E	A2A4A2C5 thru A2A4A29C5	5J	A2A4A2T4 thru A2A4A29T4	5J
A2A4A12C1	14C	A2A4A20C6	14H	A2A4A9Y1	10H
A2A4A13C1	14C	A2A4A21C6	14H	A2A4A10Y1	10H
A2A4A14C1 thru A2A4A18C1	14E	A2A4A2T1 thru A2A4A8T1	15F	A2A4A12L1	14D
A2A4A19C1	11J	A2A4A9T1	12H	A2A4A13Y1	14D
A2A4A20C1	14H	A2A4A10T1	12H	A2A4A19Y1	10H
A2A4A21C1	14H	A2A4A11T1	13F	A2A4A30C1 thru A2A4A30C9	18D
A2A4A22C1 thru A2A4A29C1	14E	A2A4A12T1	15C	A2A4A30C10 thru A2A4A30C19	17D
A2A4A2C2 thru A2A4A8C2	14F	A2A4A13T1	15C	A2A4A31C1 thru A2A4A31C9	19D
A2A4A9C2	11H	A2A4A14T1 thru A2A4A18T1	13F	A2A4A32C1 thru A2A4A32C9	19C
A2A4A10C2	11H	A2A4A19T1	12H	A2A4A33C1 thru A2A4A33C9	18C
A2A4A11C2	14F	A2A4A20T1	15H		
A2A4A12C2	14C	A2A4A21T1	15H		
A2A4A13C2	14C	A2A4A22T1 thru A2A4A29T1	15F		
A2A4A14C2 thru A2A4A18C2	14F	A2A4A2T2	14F		
A2A4A19C2	11H				
A2A4A20C2	14H				
A2A4A21C2	14H				
A2A4A22C2 thru A2A4A29C2	14F				

** WIRING TERMINATION - FOR REFERENCE ONLY

NOTES FOR FIGURE 5-35 (CONTINUED)

PART LOCATION INDEX (CONTINUED)

REF. DES.	ZONE	REF. DES.	ZONE	REF. DES.	ZONE
A2A4A33C10 thru A2A4A33C19	17B	A2A4A38C9	18K	A2A4A38Q2	19J
		C10	17J	Q3	18J
		C11	21J	R1	23J
A2A4A34C1 thru A2A4A34C19	5D	C12	20J	R2	22J
		C13	17J	R3	22J
		C14	23J	R4	21K
A2A4A35C1 thru A2A4A35C9	7D	E1	17G	R5	21J
		E2	*	R6	21H
		E3	23J	R7	21K
A2A4A36C1 thru A2A4A36C9	7C	E4	23J	R8	*
		E5	23G	R9	20J
		E6	23G	R10	20J
A2A4A37C1 thru A2A4A37C9	5C	FL1	21H	R11	19K
		FL2	19H	R12	19J
		K1	17G	R13	19H
A2A4A37C10 thru A2A4A37C19	5B	K1A1	17H	R14	19K
		K1A2	17H	R15	19J
		K1A3	17H	R16	18J
A2A4A38C1	22J	K1B1	17G	R17	18H
C2	23K	K1B2	17G	R18	18K
C3	22J	K1B3	17H	R19	18J
C4	21J	K1X1	17G	R20	17H
C5	20K	K1X2	17G	R21	21H
C6	19J	L1	23G	TP1	23J
C7	19H	Q1	21J	TP2	23J
C8	18J				

* NOT USED

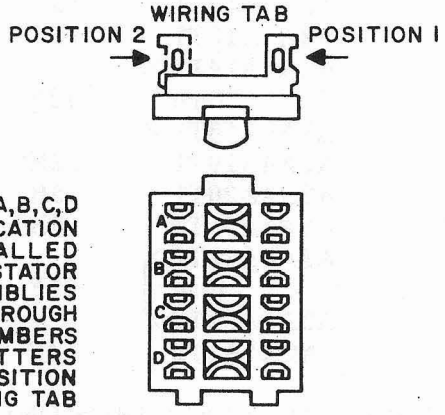

NOTES FOR FIGURE 5-35 (CONTINUED)

SPECIFIC NOTES

1. CAPACITOR VALUES FOR A2A4A31C1-C9 AND A2A4A32C1-C9 (PF)

FREQ IN MHZ	CAPACITOR REF DESIG	A31	A32
.00	C1	250	260
.01	C2	215	224
.02	C3	183	190
.03	C4	153	158
.04	C5	124	128
.05	C6	96	99
.06	C7	70	72
.07	C8	45	47
.08	C9	22	23
.09	NONE	OPEN	OPEN

2. CAPACITOR VALUES FOR A2A4A30C1-C19 AND A2A4A33C1-C19 (PF)

FREQ IN MHz	CAPACITOR REF DESIG	A30	A33
.00	C1	545	517
	C10	253	257
.10	C2	426	405
	C11	219	222
.20	C3	332	316
	C12	190	193
.30	C4	257	245
	C13	165	167
.40	C5	195	186
	C14	144	146
.50	C6	143	137
	C15	125	127
.60	C7	99	95
	C16	109	110
.70	C8	61	59
	C17	95	96
.80	C9	29	28
	C18	83	83
.90	NONE	OPEN	OPEN
	C19	74	74

NOTES FOR FIGURE 5-35 (CONTINUED)

SPECIFIC NOTES (CONTINUED)

3. COMPONENT VALUES FOR A2A4A2 THROUGH A2A4A29.

FREQ IN MHz	ON ASSY	C1 (PF)	C2 (PF)	C3 (PF)	C6 (UF)	L1 (MH)	Y1 (MHZ)
2	A20	2.0	SHORT	SHORT	.068	-	-
3	A21	2.0	1250	1250	.047	-	-
4	A22	4.7	623	629	-	-	-
5	A23	3.9	416	422	-	-	-
6	A24	3.3	312	318	-	-	-
7	A25	3.0	250	256	-	-	-
8	A26	3.0	208	214	-	-	-
9	A27	2.7	179	185	-	-	-
10	A28	2.4	157	163	-	-	-
11	A29	2.0	140	146	-	-	-
12	A2	2.0	126	132	-	-	-
13	A3	2.0	115	120	-	-	-
14	A4	2.0	105	111	-	-	-
15	A5	1.5	97	103	-	-	-
16	A6	1.5	91	96	-	-	-
17	A7	1.5	85	90	-	-	-
18	A8	1.5	80	85	-	-	-
19	A9	1.5	75	80	-	-	21.00000
20	A10	1.5	71	76	-	-	19.00000
21	A11	1.5	67	73	-	-	-
22	A12	7.0	64	68	-	8.2	-
23	A13	3.9	61	66	-	8.2	-
24	A14	2.0	58	63	-	-	-
25	A15	2.2	56	61	-	-	-
26	A16	2.2	54	52	-	-	-
27	A17	2.4	52	57	-	-	-
28	A18	2.4	50	55	-	-	-
29	A19	2.4	48	53	-	-	28.50000

4. A2A4A38FL1 THROUGH A2A4A38FL3 ARE FERRITE BEADS.

NOTES FOR FIGURE 5-35 (CONTINUED)

SPECIFIC NOTES (CONTINUED)

ACITOR VALUES FOR A2A4A35C1-C9 AND A2A4A36C1-C9

FREQ IN MHZ	CAPACITOR REF DESIG	VALUE (PF)
.00	C1	260
.01	C2	224
.02	C3	190
.03	C4	158
.04	C5	128
.05	C6	99
.06	C7	72
.07	C8	47
.08	C9	23
.09	NONE	OPEN

ACITOR VALUES FOR A2A4A34C1-C19 AND A2A4A37C1-C19

FREQ IN MHZ	CAPACITOR REF DESIG	VALUE (PF)
.00	C1	517
	C10	257
.10	C2	405
	C11	222
.20	C3	316
	C12	193
.30	C4	245
	C13	167
.40	C5	186
	C14	146
.50	C6	137
	C15	127
.60	C7	95
	C16	110
.70	C8	59
	C17	96
.80	C9	28
	C18	83
.90	NONE	OPEN
	C19	74

7. CAPACITOR VALUES FOR A2A4A2C4, C5 THROUGH A2A4A29C4, C5

FREQ IN MHz	ASSY	C4 (PF)	ASSY	C5 (PF)
2	A25	SHORT	A2	SHORT
3	A26	1250	A3	1250
4	A27	623	A4	629
5	A28	416	A5	422
6	A29	312	A6	318
7	A2	250	A7	256
8	A3	208	A8	214
9	A4	179	A9	185
10	A5	157	A10	163
11	A6	140	A11	146
12	A7	126	A12	132
13	A8	115	A13	120
14	A9	105	A14	111
15	A10	97	A15	103
16	A11	91	A16	96
17	A12	85	A17	90
18	A13	80	A18	85
19	A14	75	A19	80
20	A15	71	A20	76
21	A16	67	A21	73
22	A17	64	A22	68
23	A18	61	A23	66
24	A19	58	A24	63
25	A20	56	A25	61
26	A21	54	A26	59
27	A22	52	A27	57
28	A23	50	A28	55
29	A24	48	A29	53

8. A2A4FL1 THROUGH A2A4FL3 ARE FERRITE BEADS.

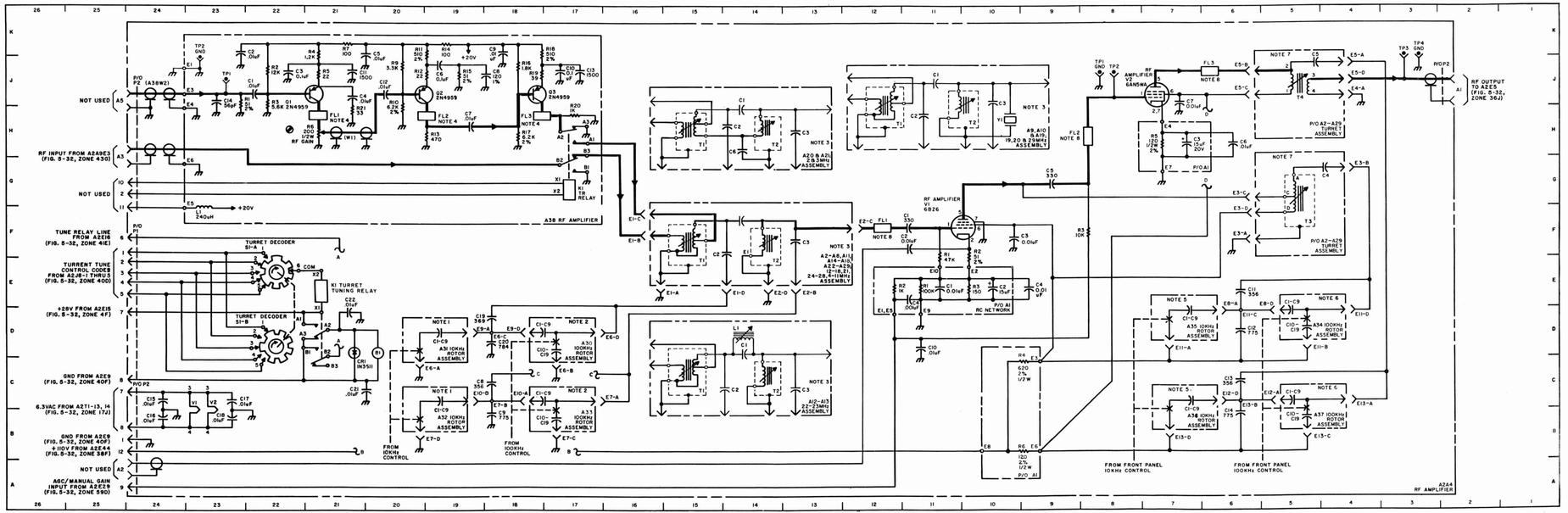

Figure 5-35. RF Amplifier Assembly A2A4, Maintenance Schematic Diagram

NOTES FOR FIGURE 5-36

GENERAL NOTES

A. PARTIAL REFERENCE DESIGNATIONS ARE SHOWN. FOR COMPLETE DESIGNATIONS PREFIX WITH NUMBERS OF NEXT HIGHER ASSEMBLIES.

B. UNLESS OTHERWISE SPECIFIED:
ALL RESISTORS ARE IN OHMS, ±5%, 1/4 WATT.
ALL CAPACITORS ARE IN PICOFARADS, ±5%, 500 VDCW; UF = MICROFARADS.
ALL INDUCTORS ARE IN MICROHENRIES, ±10%.
RESISTANCE OF INDUCTORS AND TRANSFORMER WINDINGS IS LESS THAN ONE OHM.

C. WHEN MAKING RESISTANCE MEASUREMENTS AT TRANSISTOR POINTS, USE HIGHEST POSSIBLE OHMMETER RANGE TO PREVENT DAMAGE TO TRANSISTORS.

D. * ON SCHEMATIC INDICATES A COMPONENT OF SELECTED VALUE (NOMINAL VALUE SHOWN). REFER TO CHAPTER 7 PARTS LIST FOR PART NUMBERS AND RANGE OF VALUES; TABLE 6-5, STEP 5-9, DESCRIBES HOW PARTS ARE SELECTED.

E. —⌇⌇— INDICATES BREAK POINTS USED TO REDUCE DIAGRAM CLUTTER. TO FIND MATING END OF BROKEN LINE PROCEED FROM BREAK POINT IN PARALLEL WITH DIAGRAM BORDER.

F. ——◀◀—— INDICATES FEEDBACK; ——▶—— INDICATES SIGNAL FLOW.

G. A2A5A4P3 TERMINAL IDENTIFICATION: COMPONENT SIDE 1 2 3 4 5 6
FOIL SIDE A B C D E F

PART LOCATION INDEX

REF. DES.	ZONE	REF. DES.	ZONE	REF. DES.	
A2A5C1	22K	A2A5J3-A	21H	A2A5P1-A3	2E
C2	22G	J3-B	*	P1-A4	22H
CR1	21D	J3-C	15H	P1-A5	2D
E1 thru E4	*	J3-D	21D	P1-A6	2B
		J3-E	*	P1-1	22K
		J3-F	21G	P1-2	22H
E5**	2F,14J, 21G	J3-1	21H	P1-3	22G
		J3-2	21G	R1	21E
E6	14H	J3-3	21J	A2A5A1C1	20B
E7	2B,C,E,H, I;21H; 22F,H,J	J3-4	15H	C2	20B
		J3-5	15G	C3	20B
		J3-6	15G	C4	19C
J1	*	P1	2K,22K	C5	18B
J2	*	P1-A1	2K	C6	18C
J3	15K,21K	P1-A2	2H	C7	17C

* NOT USED

NOTES FOR FIGURE 5-36 (CONTINUED)

PART LOCATION INDEX (CONTINUED)

REF. DES.	ZONE	REF. DES.	ZONE	REF. DES.	ZONE
A2A5A1C8	20C	A2A5A1R22	13C	A2A6A2C39	4D
C9	*	R23	13B	C40	3B
C10	19A	R24	12C	C41	*
C11	19B	Y1	20C	C42	*
CR1	16C	A2A5A2C1	13J	C43	*
CR2	18A	C2	13H	C44	10J
E1	20C	C3	13J	DS1	14E
E2	20C	C4	12H	E1**	2F
E3	19C	C5	11H	E2**	2J
P1	16D	C6	11J	E2A**	2K
P2	15D	C7	10J	E3	*
P3	16D	C8	10J	E4**	2H
P4	16D	C9	10J	E4A**	2J
P5	17D	C10	10G	E5	*
Q1	19B	C11	9J	E6**	8H
Q2	18C	C12	9J	E6A**	2E,8J
Q3	17C	C13	8H	E7	*
Q4	14B	C14	7G	E8**	6C
Q5	14B	C15	7J	E8A**	2D
Q6	13B	C16	6J	E9**	14G
Q7	12B	C17	5F	E9A**	14G
R1	20C	C18	5J	E10	*
R2	19B	C19	5H	E11	*
R3	19C	C20	5J	E12**	2B
R4	18C	C21	4H	E12A**	2B
R5	18B	C22	4J	E13**	14E
R6	18B	C23	13F	E14**	14K
R7	18C	C24	12F	E15**	14H
R8	17C	C25	12E	E16	*
R9	16C	C26	12E	E17	*
R10	20A	C27	10C	E18**	14H
R11	19A	C28	10B	FL1	7C
R12	17B	C29	9D	FL2	6C
R13	16B	C30	9B	L1	10K
R14	15B	C31	8C	L2	6H
R15	15B	C32	8B	L3	8C
R16	15B	C33	7D	L4	4D
R17	14C	C34	8D	Q1	12K
R18	14C	C35	6B	Q2	11H
R19	14A	C36	5D	Q3	9H
R20	13A	C37	6C	Q4	6G
R21	12A	C38	5D	Q5	4G

* NOT USED
** WIRING TERMINATIONS - FOR REFERENCE ONLY

NOTES FOR FIGURE 5-36 (CONTINUED)

PART LOCATION INDEX (CONTINUED)

REF. DES.	ZONE	REF. DES.	ZONE	REF. DES.	
A2A5A2Q6	11E	A2A5A2R39	8D	A2A5A4CR1	20J
A2A5A2Q7	8C	R40	7B	A2A5A4CR2	20J
Q8	6C	R41	7B	CR3	20H
Q9	5C	R42	6E	CR4	20H
R1	13H	R43	6B	CR5	19H
R2	12H	R44	6D	CR6	19K
R3	12J	R45	6B	CR7	20G
R4	12J	R46	5B	CR8	20D
R5	11J	R47	5D	E1	17F**
R6	11H	R48	5E	E2	21D**
R7	13K	R49	5B	E3	18E
R8	11K	R50		E4	18E**
R9	12H	thru	*	E5	18E**
R10	11H	R55		E6	16F**
R11	11G	R56	14F	P1	*
R12	11J	R57	*	P2	*
R13	10G	R58	*	P3-1	21H
R14	9J	R59	*	P3-2	21G
R15	9F	R60	9D	P3-3	21H
R16	9K	R61	7D	P3-4	15H
R17	9F	R62	12E	P3-5	15G
R18	8J	S1	14J	P3-6	15G
R19	8G	T1	8J	P3-A	21H
R20	7H	T2	3J	P3-B	*
R21	7G	T3	6D	P3-C	15H
R22	6J	A2A5A3E1	15E	P3-D	21D
R23	6G	E2	17E	P3-E	*
R24	6F	J1-1	16D	P3-F	21G
R25	6F	J1-2	15D	Q1	19J
R26	7K	J1-3	16D	Q2	18K
R27	4J	J1-4	16D	Q3	20F
R28	4F	J1-5	17D	Q4	19F
R29	5K	R1	15E	Q5	17E
R30	4G	R2	16D	R1	21H
R31	3J	A2A5A4C1	20H	R2	20H
R32	*	C2	19H	R3	20J
R33	11F	C3	15H	R4	19K
R34	12F	C4	20E	R5	20H
R35	*	C5	19E	R6	20K
R36	11F	C6	20E	R7	19G
R37	11D	C7	19E	R8	19J
R38	9B	C8	20F	R9	19H
				R10	17H

* NOT USED
** WIRING TERMINATIONS - FOR REFERENCE ONLY

NOTES FOR FIGURE 5-36 (CONTINUED)

PART LOCATION INDEX (CONTINUED)

REF. DES.	ZONE	REF. DES.	ZONE	REF. DES.	ZONE
A2A5A4R11	20E	A2A5A4U1	17G-J,	A2A5A4U2	17G,H
R12	20G		18G-H,		(4 PLACES)
R13	19F		(4 PLACES)	U3	20E
R14	20J	U2	16G-J,	U4	19E

TRANSISTOR DC VOLTAGE CHART
(ALL VALUES IN VOLTS)

	E	B	C	
A2A5A1Q1	+0.03	+0.65	+8.9	
Q2	+0.24	+0.95	+2.4	COLLECTOR
Q3	0	-0.35	+2.0	VOLTAGES
Q4	+4.5	+5.0	+9.6	VARY WITH
Q5	+5.1	+4.5	+5.5	ADJUSTMENT
Q6	+10.1	+9.6	+1.3	OF A2A5A1R15
Q7	+0.67	+1.3	+15.4	
A2A5A2Q1	+4.0	+4.1	+6.6	
Q2	+8.9	+4.4	*	
Q3	+0.63	+1.2	+16.2	
Q4	+5.7	+4.1	+17.8	
Q5	+1.4	+2.1	+10.1	
Q6	0	+0.12	+3.8	
Q8	+0.7	+1.4	+10.0	
Q9	+0.38	+0.90	+10.8	
A2A5A4Q1	0	+0.63	+3.4	
Q2	+2.32	+2.91	+5.0	
Q3	+24.7	+25.4	+25.9	
Q4	0	+0.06	+25.4	
Q5	0	+0.60	+6.5	

* NOT MEASUREABLE DUE TO CIRCUIT LOADING.

INTEGRATED CIRCUIT DC VOLTAGE CHART
(ALL VALUES IN POSITIVE VOLTS)

	PINS													
	1	2	3	4	5	6	7	8	9	10	11	12	13	14
A2A5A4U1	2.32	0	3.5	3.5	3.5	0.08	0	3.9	0.08	3.07	1.0	2.4	3.0	5.0
U2	2.0	2.0	1.1	1.1	3.8	2.4	0	0.8	3.9	2.4	3.8	0.08	0	5.0
U3	24.8	20.0	0											
U4	6.5	5.0	0											

NOTES FOR FIGURE 5-36 (CONTINUED)

SPECIFIC NOTES

1. TRANSISTOR AND INTEGRATED CIRCUIT VOLTAGE MEASUREMENTS TAKEN TO GROUND USING OSCILLOSCOPE 80009-465M AND 10X PROBE, AFTER ONE HOUR WARM-UP WITH SWITCH A2A5A2S1 SET AT INT/COMP.

2. MAXIMUM RESISTANCE OF INDUCTOR AND TRANSFORMER WINDINGS FOLLOWS:

A2L1	5.2 OHMS
A2L2	7.1 OHMS
A2T1	7.8 OHMS (PRIMARY)
A2T2	7.8 OHMS (PRIMARY)

3. A3J1, A3R1 AND A3R2 ARE MOUNTED ON OVEN BODY. A3R1 REPRESENTS OVEN HEATER WINDING.

4. S1-1 = EXT (OVEN STBY)
   S1-2 = EXT NORMAL
   S1-3 = INT/COMP (SWITCH SHOWN IN POSITION 1, FULLY CCW)

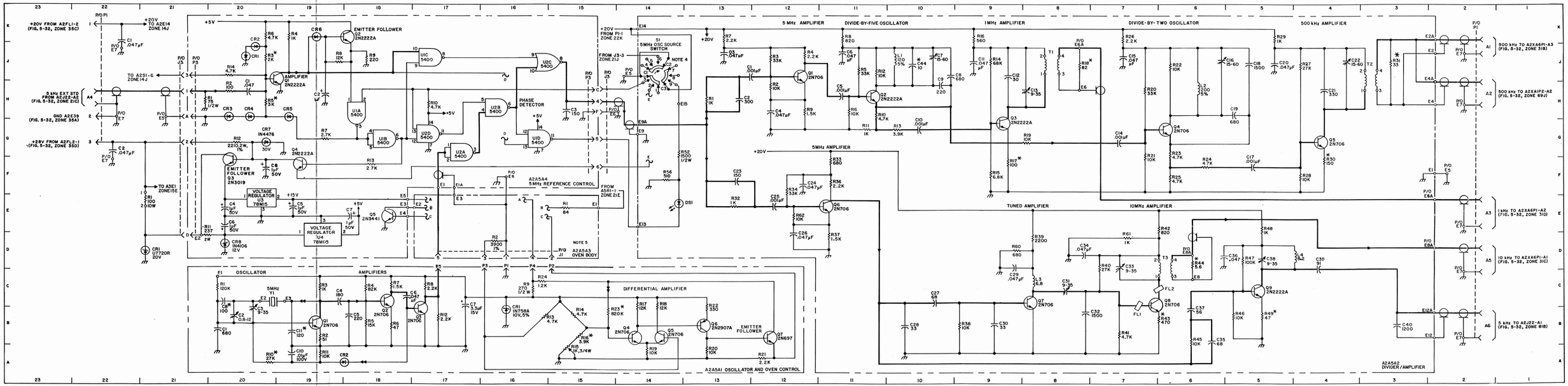

Figure 5-36. Frequency Standard Assembly A2A5, Maintenance Schematic Diagram

NOTES FOR FIGURE 5-37

GENERAL NOTES

A. PARTIAL REFERENCE DESIGNATIONS ARE SHOWN. FOR COMPLETE DESIGNATION PREFIX WITH NUMBERS OF NEXT HIGHER ASSEMBLY.

B. THE TRANSLATOR/SYNTHESIZER IS COMMON TO BOTH T-827H/URT AND R-1051H/URR. REFERENCES APPLY ONLY AS INDICATED TO T-827H/URT (XMTR) OR R-1051H/URR (RCVR) AND SIGNAL FLOW IS SHOWN FOR R-1051H/URR APPLICATION.

C. UNLESS OTHERWISE SPECIFIED:
ALL RESISTORS ARE IN OHMS, ±5%, ONE WATT.
ALL CAPACITORS ARE IN MICROFARADS.

D. CCW ON SWITCH WIPERS INDICATES DIRECTION OF ROTATION WHEN VIEWED FROM SHAFT END AND CORRESPONDS TO CLOCKWISE ROTATION OF FRONT PANEL CONTROLS.

E. SWITCHES S1 THROUGH S3 SHOWN IN 000 KHZ POSITION.

F. ——▶—— INDICATES SIGNAL FLOW.

G. ——◀◀—— INDICATES FEEDBACK.

H. ▭ INDICATES FRONT PANEL MARKING.

I. ——≀≀—— INDICATES BREAK POINTS USED TO REDUCE DIAGRAM CLUTTER. TO FIND MATING END OF BROKEN LINE PROCEED IN PARALLEL WITH DIAGRAM BORDER.

PART LOCATION INDEX

REF. DES.	ZONE	REF. DES.	ZONE	REF. DES.	ZONE
A2A6AT1TP1	24C	A2A6E3	5B	A2A6E15	*
AT1R1	23C	E4 thru E7	***	E16	22A,20A
AT2P1	24C			E17	19A
AT2R1	23C			E18	**
C1	19B	E8	*	E19	**
C2	14A	E9	*	FL1	22A
C3	14A	E10 thru E13	***	FL2	*
E1	9D,11A, 14D,19A			FL3	*
				FL4	19A
E2	3C	E14	*	FL5	5B

* NOT USED
** NOT SHOWN
*** WIRING TERMINATIONS - FOR REFERENCE ONLY.

NOTES FOR FIGURE 5-37 (CONTINUED)

PART LOCATION INDEX (CONTINUED)

REF. DES.	ZONE	REF. DES.	ZONE	REF. DES.	ZONE
A2A6P1-A1	24B	S2E1	18E	P1-5	12A
P1-A2	24C	S2E2	18D	A2A6XA15P1-A1	19B
P1-A3	24C	S2E3	20D	P1-A2	17B
P1-1	24E	S2E4	18D	P1-A3	17B
P1-2	24E	S2E5	18D	P1-A4	17C
P1-3	24D	S3E1	20E	P1-1	*
P1-4	24D	S3E2	20D	P1-2	*
P1-5	24D	S3E3	22C	P1-3	19B
P1-6	2E	S3E4	20D	P1-4 thru P1-8	*
P1-7	2D	S3E5	20D		
P1-8	2B	XA12P1-A1	11D		
P1-9	2D	XA12P1-A2	11E	P1-9	19B
P1-10	24A	XA12P1-A3	11E	P1-10	19A
P1-11	24D	XA12P1-A4	8E	P1-11	19A
P1-12	2D	XA13P1-A1	15B	P1-12 thru P1-14	*
P1-13	24D	P1-A2	13B		
P1-14	24B	P1-A3	13B		
P1-15	24D	P1-A4	13B	P1-15	19A
P1-16	2C	P1-1	*	P1-16	19A
P1-17	24D	P1-2	15B	P1-17	19A
P1-18	2C	P1-3	15B	A2A6XA17P1-A1	8B
P1-19	24B	P1-4	15B	P1-A2	6B
P1-20	24C	P1-5	15B	P1-1	8B
P1-21	2C	P1-6	15B	P1-2	*
P2-A1	2F	P1-7	13A	P1-3	8C
P2-A2	24F	P1-8	13AQ	P1-4	8C
P3-A1	24F	P1-9	13A	P1-5	8C
P3-A2	2F	P1-10	14A	P1-6	8C
P4	5D	P1-11	14A	P1-7	8B
P5	3C	P1-12	*	P1-8	8B
P6	5D	P1-13	*	P1-9 thru P1-12	*
P7	3C	P1-14	*		
P8	20A	P1-15	14A	P1-13	6B
P9	20A	P1-16	14A	P1-14	6B
P10	20A	P1-17	13A	P1-15	6B
P11	21A	A2A6XA14P1-A1	12B	A2A6XA19P1-1	*
P12	5C	P1-A2	12B	P1-2	10D
P13	5C	P1-A3	12B	P1-3	10D
S1E1	16E	P1-A4	10B	P1-4	9D
S1E2	16D	P1-1	12B	P1-5	9D
S1E3	18C	P1-2	12A	A2A6XA20P1-A1	12E
S1E4	16D	P1-3	11A	P1-A2	12E
S1E5	16D	P1-4	11A		

* NOT USED

NOTES FOR FIGURE 5-37 (CONTINUED)

PART LOCATION INDEX (CONTINUED)

REF. DES.	ZONE
A2A6XA20P1-1	14D
P1-3 thru P1-6	14E
P1-7	14D
P1-8	14E
P1-9	14E
P1-10	14D
P1-11	14E
P1-12 thru P1-15	12D
A2A6A1 thru A2A6A6	*
A2A6A7C1	21A
C2	21A
E1 thru E11	*
E12	22A
E13	21A
E14	22A
E15	21A
R1	*
R2	*
R3	21A
R4	21A
A2A6A8E1	5F
E2	5F
E3	3F
E4	3F
E5	5E
E6	5E
E7	5B
E8	5B
E9	5A
E10	5A
E11	5F
E12	3F
E13	5F
E14	3F
E15	5B
J1	*

REF. DES.	ZONE
A2A6A8J2	*
J3	*
J4	5D
J5	3C
J6	5D
J7	3C
A2A6A13A1P1-A1	15B
A1P1-A2	13B
A1P1-A3	13B
A1P1-A4	13B
A1P1-1	*
A1P1-2 thru A1P1-6	15B
A1P1-7	13A
A1P1-8	13B
A1P1-9	13A
A1P1-10	14A
A1P1-11	14A
A1P1-12	*
A1P1-13	*
A1P1-14	*
A1P1-15	14A
A1P1-16	14A
A1P1-17	13A
A2A6A14P1-A1	12B
P1-A2	12B
P1-A3	12B
P1-A4	10B
P1-1	12B
P1-2	12A
P1-3	11A
P1-4	11A
P1-5	12A
A2A6A15E1	21A
E2	*
E3	*
E4	20A
E5	20A
E6	20A
A2A6A16P1-A1	19B
P1-A2	17B
P1-A3	17B
P1-A4	17C

REF. DES.	
A2A6A16P1-1	*
P1-2	*
P1-3	19B
P1-4 thru P1-8	*
P1-9	19B
P1-10	19A
P1-11	19A
P1-12	*
P1-13	*
P1-14	*
P1-15	19A
P1-16	19A
P1-17	19A
A2A6A17P1-A1	8B
P1-A2	6B
P1-1	8B
P1-2	*
P1-3 thru P1-6	8C
P1-7	8B
P1-8	8B
P1-9 thru P1-12	*
P1-13	6B
P1-14	6B
P1-15	6B
A2A6A19P1-A1	11D
P1-A2	11E
P1-A3	11E
P1-A4	8E
A2A6A20P1-A1	12E
P1-A2	12E
P1-1	14D
P1-2	14D
P1-3	14E
P1-4	14E
P1-5	14E
P1-6	14E
P1-7	14D
P1-8	14E

* NOT USED

NOTES FOR FIGURE 5-37 (CONTINUED)

PART LOCATION INDEX (CONTINUED)

REF. DES.	ZONE	REF. DES.	ZONE	REF. DES.	ZONE
A2A6A20P1-9	14E	A2A6A20P1-12	12D	A2A6A20P1-14	12D
P1-10	14D	P1-13	12D	P1-15	12D
P1-11	14E				

* NOT USED

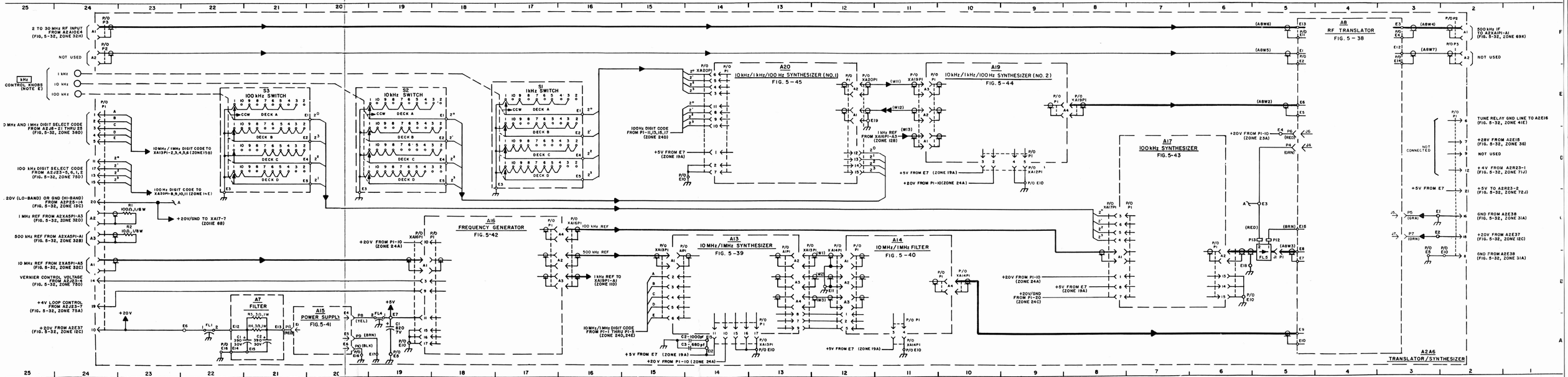

Figure 5-37. Translator/Synthesizer Assembly A2A6, Maintenance Schematic Diagram

NOTES FOR FIGURE 5-38

GENERAL NOTES

A. THE RF TRANSLATOR IS COMMON TO BOTH T-827J/URT AND R-10G1H/URR. THE SIGNAL PATH AND FIGURE REFERENCES APPLY TO R-1051H/URR ONLY.

B. PARTIAL REFERENCE DESIGNATIONS ARE SHOWN. FOR COMPLETE DESIGNATION PREFIX WITH A2A6A8.

C. UNLESS OTHERWISE SPECIFIED:
ALL RESISTORS ARE IN OHMS, ±5%, 1/4 WATT.
ALL CAPACITORS ARE IN MICROFARADS.
ALL INDUCTORS ARE IN MICROHENRIES.
RESISTANCE OF INDUCTORS AND TRANSFORMER WINDINGS IS LESS THAN ONE OHM.

D. CW ON POTENTIOMETERS INDICATES DIRECTION OF ROTATION WHEN VIEWED FROM SHAFT END.

E. WHEN MAKING RESISTANCE MEASUREMENTS AT TRANSMITTER POINTS USE HIGHEST POSSIBLE OHMMETER RANGE TO PREVENT DAMAGE TO TRANSISTORS.

F. CHASSIS GROUND IS ACCOMPLISHED VIA MOUNTING SCREWS AND CABLE SHIELDS.

G. ——≀≀—— INDICATES BREAK POINTS USED TO REDUCE DIAGRAM CLUTTER. TO FIND MATING END OF BROKEN LINE PROCEED IN PARALLEL WITH DIAGRAM BORDER.

PART LOCATION INDEX

REF. DES.	ZONE	REF. DES.	ZONE	REF. DES.	ZONE
A2A6A8C1	19A	A2A6A8C16	21C	A2A6A8C31	14C
C2	17D	C17	20C	C32	14C
C3	17C	C18	19D	C33	12C
C4	23E	C19	22D	C34	14C
C5	21A	C20	20D	C35	15C
C6	20C	C21	20E	C36	15A
C7	22C	C22	13E	C37	15C
C8	21C	C23	23A	C38	12D
C9	17D	C24	18D	C39	10C
C10	18D	C25	15D	C40	10C
C11	19C	C26	16C	C41	10D
C12	18D	C27	12D	C42	11E
C13	19D	C28	23A	C43	11E
C14	23D	C29	13C	C44	9C
C15	21C	C30	14C	C45	9D

* NOT USED

NOTES FOR FIGURE 5-38 (CONTINUED

PART LOCATION INDEX (CONTINUED)

REF. DES.	ZONE	REF. DES.	ZONE	REF. DES.	ZONE
A2A6A8C46	8D	A2A6A8E2**	24D	A2A6A8L13	9D
C47	9A	E3**	2F	L14	3C
C48	8D	E4**	2F	L15	23D
C49	7B	E5**	24F	Q1	17D
C50	4D	E6**	24F	R1	16D
C51	7C	E7**	24C	R2	22A
C52	7B	E8**	24C	R3	20B
C53	4B	E9**	24B	R4	20C
C54	5B	E10**	24B	R5	17C
C55	5C	E11**	24B	R6	17E
C56	2C	E12**	2C	R7	17C
C57	78	E13**	24B	R8	17D
C58	3C	E14**	2C	R9	17D
C59	3C	E15**	19A,2E	R10	21C
C60	5B	E16	4B	R11	20B
C61	4B	E17	3B	R12	19C
C62	5B	E18	4B	R13	18D
C63	22B	E19	3B	R14	22D
C64	6B	E20	4B	R15	23D
C65	9A	E21	3B	R16	19E
C66	23D	FL1	10D	R17	22D
CR1	20A	FL2	10C	R18	23E
CR2	22D	FL3	18D	R19	19E
CR3	19D	J1	*	R20	20E
CR4	21D	J2	*	R21	12E
CR5	19D	J3	*	R22	16D
CR6	13D	J4	24E	R23	12D
CR7	15D	J5	24E	R24	16D
CR8	12D	J6	24A	R25	12D
CR9	15C	J7	24E	R26	15C
CR10	11D	L1	23E	R27	13C
CR11	11C	L2	18D	R28	13D
CR12	9D	L3	18A	R29	15D
CR13	9C	L4	23A	R30	13C
CR14	3D	L5	23E	R31	13B
CR15	4C	L6	11D	R32	14C
CR16	6C	L7	12E	R33	14A
CR17	4C	L8	11D	R34	11E
CR18	6C	L9	11C	R35	11E
CR19	23B	L10	10D	R36	9D
CR20	22B	L11	9C	R37	8D
E1**	24D	L12	23F	R38	8D

* NOT USED

NOTES FOR FIGURE 5-38 (CONTINUED

PART LOCATION INDEX (CONTINUED)

REF. DES.	ZONE	REF. DES.	ZONE	REF. DES.	ZONE
A2A6A8R39	7D	A2A6A8R57	13A	A2A6A8T1	16D
R40	4B	R58	4A	T2	21D
R41	7C	R59	21D	T3	20D
R42	7D	R60	21C	T4	13D
R43	7C	R61	21C	T5	14D
R44	2D	R62	21C	T6	4C
R45	3D	R63	14D	T7	5C
R46	6C	R64	14D	TP1 thru TP4	*
R47	4C	R65	14C		
R48	6C	R66	14C		
R49	3B	R67	5C	TP5	23B
R50	4A	R68	5B	TP6	2C
R51	23B	R69	5B	TP7	24D
R52	22B	R70	5B	TP8	3F
R53	4B	RT1	21B	U1	20D
R54	5B	RT2	14A	U2	14D
R55	5A	RT3	5A	U3	5C
R56	20B				

* NOT USED

TRANSISTOR DC VOLTAGE CHART			
	E	B	C
Q1	+8.10V	+8.7V	+17.9V

INTEGRATED CIRCUIT DC VOLTAGE CHART												
PINS	1	2	3	4	5	6	7	8	9	10	11	12
U1	+10.1V	+5.95V	+5.1V	0V	0V	0V	0V	0V	0V	+10.1V	+13.4V	+13.4V
U2	+9.86V	+5.84V	+5.11V	0V	0V	0V	0V	0V	0V	+9.8V	+13.7V	+13.7V
U3	+10.3	+6.1V	+5.3V	0V	0V	0V	0V	0V	0V	+10.3V	+15.3V	+15.3V

NOTES FOR FIGURE 5-38 (CONTINUED)

SPECIFIC NOTES

1. RESISTANCE OF THERMISTORS RT1 THROUGH RT3 IS 180 TO 220 OHMS AT REFERENCE TEMPERATURE OF 25°C.

2. MAXIMUM RESISTANCE OF INDUCTORS FOLLOWS:
L1, L4, L5 L12 = 17.5 OHMS; L3, L6, L7, L10 = 2.0 OHMS; L9, L11 = 1.1 OHMS; L15 = 3.3 OHMS.

3. MAXIMUM RESISTANCE OF TRANSFORMER WINDINGS FOLLOWS:
T1 = 3.2 OHMS (PRIMARY) AND 1.4 OHMS (SECONDARY); T2, T3 = 1.3 OHMS (SECONDARY).

4. TRANSISTOR AND INTEGRATED CIRCUIT VOLTAGE MEASUREMENTS TAKEN TO GROUND USING MULTIMETER 55026-260-6XLP WITH TEST FIXTURE CONTROLS SET FOR 2.5 MHz OPERATION IN LSB MODE.

5. SOLID LINES = PREFERRED ARRANGEMENT; R36 LOCATED BETWEEN C45 AND FL1-4.
DOTTED LINES = ALTERNATE ARRANGEMENT; R36 LOCATED BETWEEN C44 AND FL2-2.

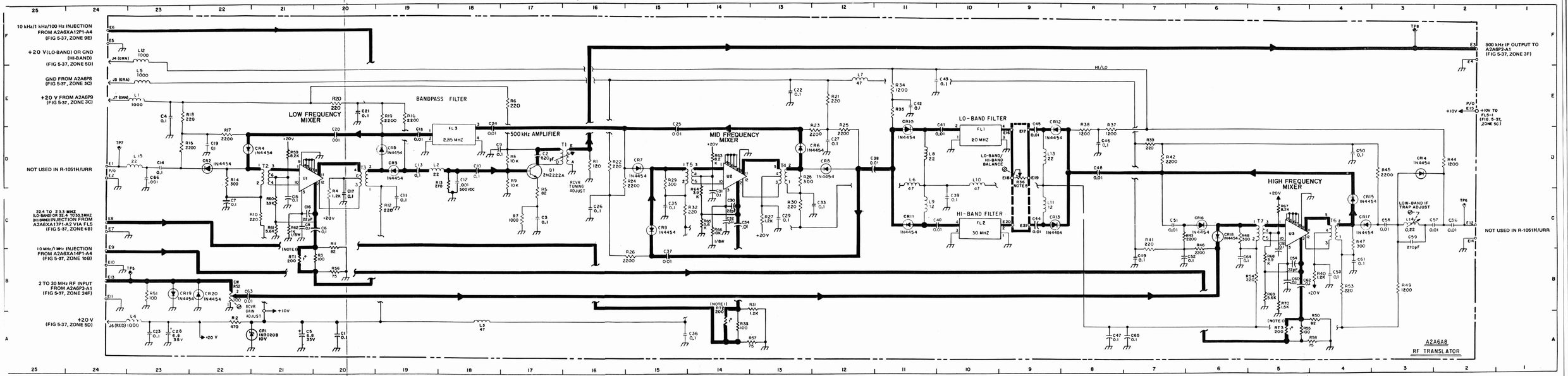

Figure 5-38. RF Translator Subassembly A2A6A8, Maintenance Schematic Diagram

NOTES FOR FIGURE 5-39

GENERAL NOTES

A. PARTIAL REFERENCE DESIGNATIONS ARE SHOWN. FOR COMPLETE DESIGNATION PREFIX WITH A2A6A13.

B. UNLESS OTHERWISE SPECIFIED:
ALL RESISTORS ARE IN OHMS, ±5%, 1/8 WATT.
ALL CAPACITORS ARE IN MICROFARADS.
RESISTANCE OF INDUCTORS IS LESS THAN ONE OHM.
ALL INDUCTORS ARE IN MICROHENRIES.

C. WHEN MAKING RESISTANCE MEASUREMENTS AT TRANSISTOR POINTS, USE HIGHEST POSSIBLE OHMMETER RANGE TO PREVENT DAMAGE TO TRANSISTORS.

D. ◄—— INDICATES FEEDBACK; ——► INDICATES SIGNAL FLOW.

E. ——⌇⌇—— INDICATES BREAK POINTS USED TO REDUCE DIAGRAM CLUTTER. TO FIND MATING END OF BROKEN LINE PROCEED IN PARALLEL WITH DIAGRAM BORDER.

PART LOCATION INDEX

REF. DES.	ZONE	REF. DES.	ZONE	REF. DES.	ZONE
A2A6A13C1	16J	A2A6A13CR2 thru CR5	*	L3	10H
C2	14J			L4	15D
C3	11J			L5	15D
C4	9H	CR6	16G	L6	15D
C5	11G	CR7	10H	L7	15C
C6	11J	CR8	12G	L8	15C
C7	10H	CR9	12G	Q1	8H
C8	11H	E1	3C	R1	16H
C9	10H	E2	3C	R2	15E
C10	9J	E3	15J	R3	14E
C11	7G	E4	15H	R4	14E
C12	7E	E5	15J	R5	14E
C13	6F	E6	15J	R6	13E
C14	4F	E7	3D	R7	10H
C15	4E	E8	3D	R8	11J
C16	10G	E9	3D	R9	12J
C17	9G	E10	3C	R10	12H
C18	13E	E11	15K	R11	13H
C19	9J	E12	15J	R12	*
C20	15H	L1	16J	R13	7H
CR1	*	L2	*	R14	7E

* NOT USED

NOTES FOR FIGURE 5-39 (CONTINUED)

PART LOCATION INDEX (CONTINUED)

REF. DES.	ZONE	REF. DES.	ZONE	REF. DES.	
A2A6A13R15	7E	A2A6A13TP3	15K	A2A6A13A1CR3	16D
R16	3D	U1	13H	CR4	16C
R17	3D	U2	11H	CR5	16C
R18	3C	U3	9H	FL1	16D
R19	9K	U4	6F;7F,G	FL2	16D
R20	12H	U5	5F	FL3	16D
R21	11G	U6	4C,D;6D	FL4	16C
R22 thru R26	*	U7	9F	FL5	16C
		U8	10F	A2A6A13A1P1-A1	17H
		U9	13D	P1-A2	2D
R27	11J	A2A6A13A1CR1	16D	P1-A3	2C
TP1	13G	CR2	16D	P1-A4	2C
TP2	8E				

* NOT USED

TRANSISTOR DC VOLTAGE CHART			
	E	B	C
Q1	+3.00V	+3.61V	+4.80V

INTEGRATED CIRCUIT DC VOLTAGE CHART
(ALL VALUES IN POSITIVE VOLTS)

	PINS							
	1	2	3	4	5	6	7	8
U1	1.86	3.75	4.1	3.7	1.07	1.73	0	-
U2	0	1.27	1.07	0	-	5.0	15.5	6.58
U3	4.8	-	3.6	-	1.35	-	0	0
U4	1.85	1.37	0	1.34	0	1.47	0	0
U5	-	2.05	1.65	0	0	2.0	-	0
U6	0.22	5.0	1.75	1.0	1.6	1.6	0	1.65
U7	5.0	1.00	5.0	0.07	0.9	0.07	0	0
U8	5.0	1.0	0.07	3.6	0.07	0.07	0.05	0
U9	5.0	1.02	0.06	0.05	5.0	0	3.85	0

NOTES FOR FIGURE 5-39 (CONTINUED)

INTEGRATED CIRCUIT VOLTAGE CHART (CONTINUED)
(ALL VALUES +V)

	9	10	11	12	13	14	15	16
U1	-	1.25	3.75	3.7	3.7	5.0	-	-
U2	-	-	-	-	-	-	-	-
U3	-	1.55	-	1.55	-	4.8	-	-
U4	0	-	0	0	-	5.0	-	-
U5	-	-	1.68	0.2	4.2	1.6	-	5.0
U6	5.0	0	2.0	0.15	1.23	5.0	-	-
U7	0.23	0	-	-	-	-	4.0	5.0
U8	0.23	0.55	-	-	-	-	0.23	5.0
U9	4.23	0	1.14	3.3	1.92	2.03	0	5.0

SPECIFIC NOTES

1. TRANSISTOR AND INTEGRATED CIRCUIT VOLTAGE MEASUREMENTS TAKEN TO GROUND USING MULTIMETER 55026-260-6XLP WITH EQUIPMENT CONTROLS SET FOR 2.5 MHz OPERATION.

2. DIODES A1CR1 THRU A1CR5 ARE TYPE 1N3611. THE VALUE OF FILTERS A1FL1 THRU A1FL5 IS ONE MICROFARAD ±20%.

3. INTEGRATED CIRCUITS U4 AND U6 ARE TYPE 54S02.

4. THE INFORMATION CONTAINED IN THESE NOTES IS ORGANIZED TO ALLOW TROUBLESHOOTING OF THE VARIOUS RECEIVER FUNCTIONS IN AN OPERATING R-1051H/URR RECEIVER. FOR DEPOT MAINTENANCE THE MODULE UNDER TEST WILL BE OPERATED IN TEST FIXTURE TS-3665/WRC-1. TEST FIXTURE CONTROL SETTINGS SHALL CORRESPOND TO THE SETTINGS OF THEIR COUNTERPART CONTROLS OF THE R-1051H/URR.

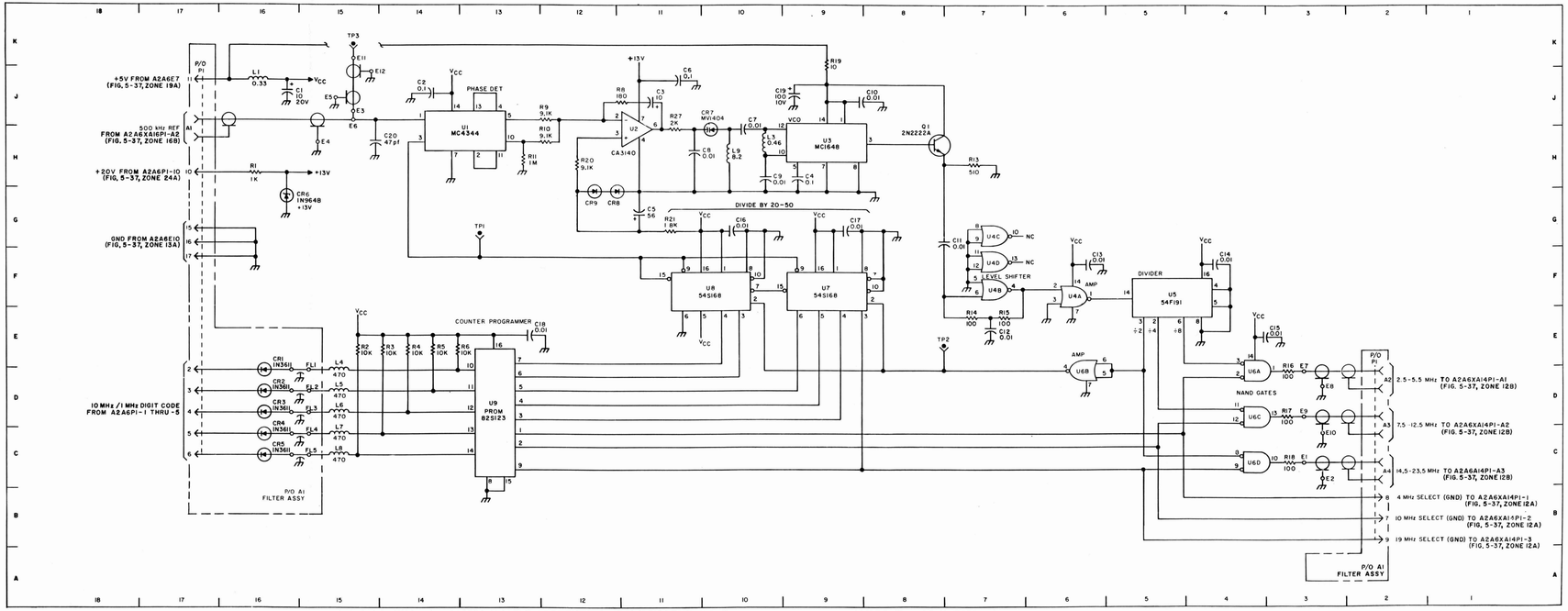

Figure 5-39. 10 MHz/1 MHz Synthesizer Subassembly A2A6A13, Maintenance Schematic Diagram

NOTES FOR FIGURE 5-40

GENERAL NOTES

A. PARTIAL REFERENCE DESIGNATIONS ARE SHOWN, FOR COMPLETE DESIGNATION PREFIX WITH A2A6A14.

B. UNLESS OTHERWISE SPECIFIED:
ALL RESISTORS ARE IN OHMS, ±5%, 1/8 WATT.
ALL CAPACITORS ARE IN MICROFARADS.
ALL INDUCTORS ARE IN MICROHENRIES.
ALL TRANSISTORS ARE TYPE 2N2222A.
RESISTANCE OF INDUCTORS LESS THAN ONE OHM.

C. WHEN MAKING RESISTANCE MEASUREMENTS AT TRANSISTOR POINTS, USE HIGHEST POSSIBLE OHMMETER RANGE TO PREVENT DAMAGE TO TRANSISTORS.

D. ——▶—— INDICATES SIGNAL FLOW.

PART LOCATION INDEX

REF. DES.	ZONE	REF. DES.	ZONE	REF. DES.	ZONE
A2A6A14C1	7E	A2A6A14C24	4B	A2A6A14L2	5E
C2	6E	C25	4B	L3	5E
C3	5E	C26	3B	L4	4E
C4	6D	C27	5B	L5	4E
C5	5E	C28	8D	L6	4F
C6	4E	C29	2C	L7	6D
C7	4E	E1	9E	L8	5D
C8	5F	E2	9C	L9	5C
C9	5F	E3	2C	L10	4D
C10	7C	E4	8B	L11	4C
C11	6D	E5	8E	L12	4D
C12	5C	E6	8F	L13	6B
C13	6C	E7	8B	L14	5B
C14	5C	E8	8B	L15	5B
C15	4C	E9	9C	L16	4B
C16	4D	E10	2C	L17	4B
C17	3D	E11	8F	L18	4B
C18	5D	E12	9B	L19	8E
C19	7B	E13	8E	P1A1	9E
C20	6B	E14	8B	P1A2	9C
C21	5B	E15	9E	P1A3	9B
C22	6A	E16	8B	P1A4	2C
C23	5B	L1	6F	P1-1	9E

NOTES FOR FIGURE 5-40 (CONTINUED)

PART LOCATION INDEX (CONTINUED)

REF. DES.	ZONE	REF. DES.	ZONE	REF. DES.	ZONE
A2A6A14P1-2	9D	A2A6A14R5	7E	A2A6A14R22	8B
P1-3	9E	R6	6E	R23	7B
P1-4	9D	R7	6E	R24	6B
P1-5	9B	R8	6E	R25	7A
Q1	7F	R9	3F	R26	7A
Q2	6E	R10	3E	R27	6A
Q3	3E	R11	8D	R28	6A
Q4	7D	R12	8D	R29	3B
Q5	6C	R13	7D	R30	3B
Q6	3D	R14	6D	R31	3C
Q7	7B	R15	7C	TP1	3F
Q8	6B	R16	7C	TP2	8F
Q9	3B	R17	6C	TP3	9D
R1	8E	R18	6C	TP4	8D
R2	8F	R19	3D	TP5	2D
R3	7F	R20	3C	TP6	9B
R4	6F	R21	8B	TP7	8C

TRANSISTOR VOLTAGE CHART

	E	B	C
Q1	+5.0V	+5.0V	0V
Q2	0V	0V	0V
Q3	1.85	0V	0V
Q4	+5.0V	+5.0V	0V
Q5	0V	0V	0V
Q6	1.85	0V	0V
Q7	+5.0V	+4.4V	+5.0V
Q8	+2.0V	+2.45V	+5.0V
Q9	+1.85V	+2.5V	+5.0V

SPECIFIC NOTES

1. TRANSISTOR VOLTAGE MEASUREMENTS TAKEN TO GROUND USING MULTIMETER 55026-260-6XLP AND WITH EQUIPMENT CONTROLS SET FOR 2.5 MHZ OPERATION IN LSB MODE.

NOTES FOR FIGURE 5-40 (CONTINUED)

SPECIFIC NOTES (CONTINUED)

2. MAXIMUM RESISTANCE OF INDUCTORS FOLLOWS:

L1, L3, L5	3.3 OHMS
L2, L4, L6, L12, L18	2.7 OHMS
L19	1.2 OHMS

3. THE INFORMATION CONTAINED IN THESE NOTES IS ORGANIZED TO ALLOW TROUBLESHOOTING OF THE VARIOUS RECEIVER FUNCTIONS IN AN OPERATING R-1051H/URR RECEIVER. FOR DEPOT MAINTENANCE THE MODULE UNDER TEST WILL BE OPERATED IN TEST FIXTURE TS-3665/WRC-1. TEST FIXTURE CONTROL SETTINGS SHALL CORRESPOND TO THE SETTINGS OF THEIR COUNTERPART CONTROLS OF THE R-1051H/URR.

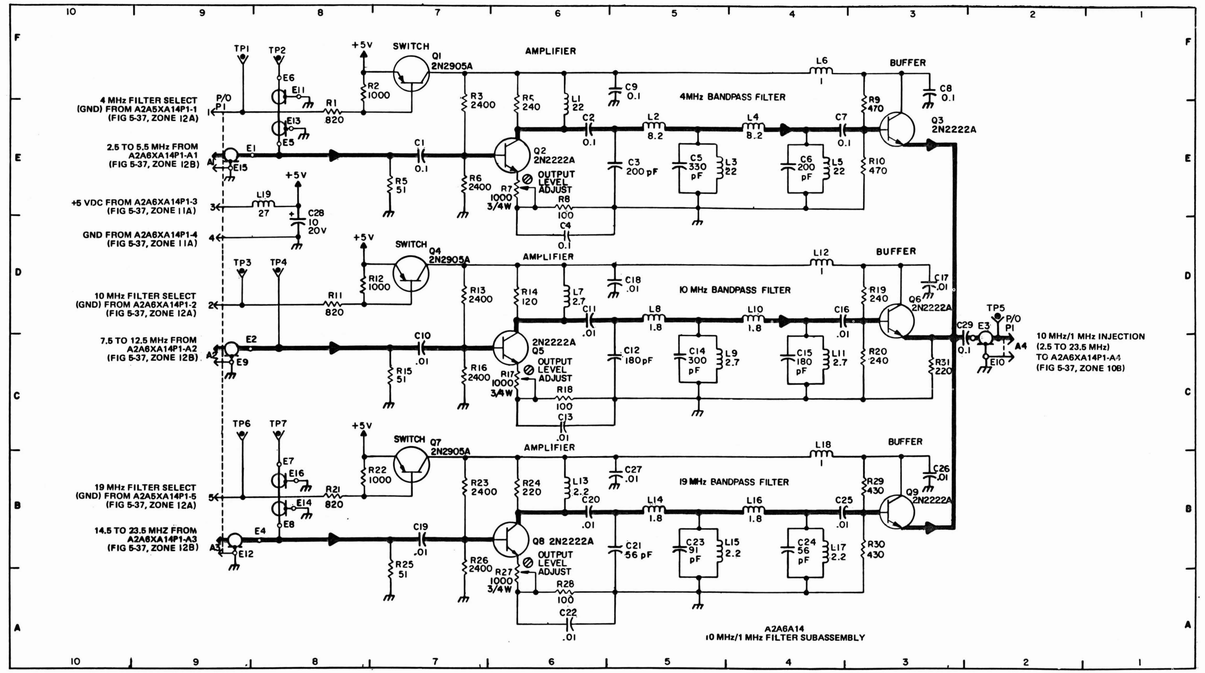

Figure 5-40. 10 MHz/1 MHz Filter Subassembly A2A6A14, Maintenance Schematic Diagram

NOTES FOR FIGURE 5-41

GENERAL NOTES

A. PARTIAL REFERENCE DESIGNATIONS ARE SHOWN. FOR COMPLETE DESIGNATION PREFIX WITH A2A6A15.

B. UNLESS OTHERWISE SPECIFIED:
ALL RESISTORS ARE IN OHMS, ±5%, 1/4 WATT.
ALL CAPACITORS ARE IN MICROFARADS.
ALL REFERENCE DIODE VOLTAGES ARE ±5%.
RESISTANCE OF INDUCTORS IS LESS THAN ONE OHM.

C. WHEN MAKING RESISTANCE MEASUREMENTS AT TRANSISTOR POINTS, USE HIGHEST POSSIBLE OHMMETER RANGE TO PREVENT DAMAGE TO TRANSISTORS.

D. ——◀◀—— INDICATES FEEDBACK.

E. ——\\—— INDICATES BREAK POINTS USED TO REDUCE DIAGRAM CLUTTER. TO FIND MATING END OF BROKEN LINE PROCEED IN PARALLEL WITH DIAGRAM BORDER.

TRANSISTOR DC VOLTAGE CHART			
	E	B	C
Q1	+19.2V	+18.82V	+5.65V
Q2	+19.10V	+19.0V	+2.34V
Q3	+5.39V	+5.64V	+19.01V

INTEGRATED DC VOLTAGE CHART								
	PINS							
	1	2	3	4	5	6	7	8
U1	0V	+9.7V	+9.42V	0V	+18.95V	+18.95V	+9.38V	+19.08V
U2	+5.03V	+18.78V	+19.07V	0V	+2.19V	+2.33V	+4.43V	+4.96V

SPECIFIC NOTES

1. THE VALUE OF A2A6A15R15 IS SELECTED FROM 1100 TO 2400 OHMS FOR A +5.1 TO +5.3V INDICATION AT A2A6A15TP2 WITH A 2-AMPERE LOAD. REFER TO CHAPTER 7 FOR PART NUMBERS AND RESISTANCE VALUES.

2. TRANSISTOR AND INTEGRATED CIRCUIT VOLTAGE MEASUREMENTS TAKEN TO GROUND USING MULTIMETER 55026-260-6XLP WITH EQUIPMENT MODE SELECTOR SWITCH SET AT LSB POSITION.

NOTES FOR FIGURE 5-41 (CONTINUED)

SPECIFIC NOTES (CONTINUED)

3. THE INFORMATION CONTAINED IN THESE NOTES IS ORGANIZED TO ALLOW TROUBLESHOOTING OF THE VARIOUS RECEIVER FUNCTIONS IN AN OPERATING R-1051H/URR RECEIVER. FOR DEPOT MAINTENANCE THE MODULE UNDER TEST WILL BE OPERATED IN TRANSLATOR/SYNTHESIZER TEST FIXTURE TS-3665/WRC-1. TEST FIXTURE CONTROL SETTINGS SHALL CORRESPOND TO THE SETTINGS OF THEIR COUNTERPART CONTROLS OF THE R-1051H/URR.

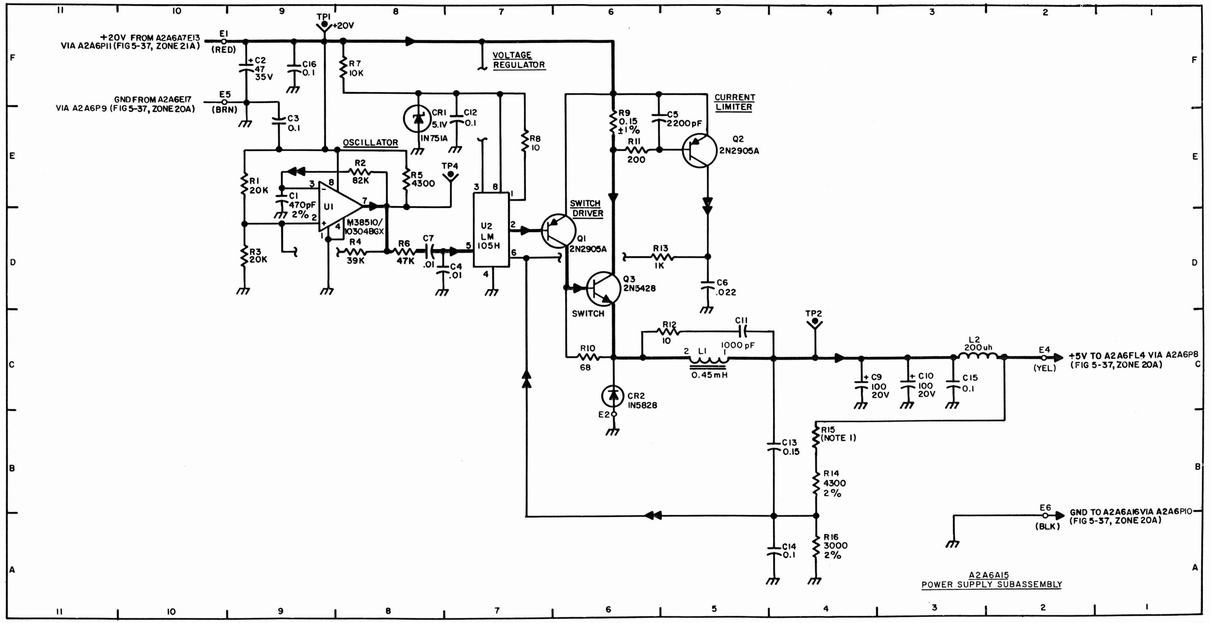

Figure 5-41. Power Supply Subassembly A2A6A15, Maintenance Schematic Diagram

NOTES FOR FIGURE 5-42

GENERAL NOTES

A. PARTIAL REFERENCE DESIGNATIONS ARE SHOWN. FOR COMPLETE DESIGNATION PREFIX WITH A2A6A16.

B. UNLESS OTHERWISE SPECIFIED:
ALL RESISTORS ARE IN OHMS, ±5%, 1/8 WATT.
ALL CAPACITORS ARE IN MICROFARADS.
ALL INDUCTORS ARE IN MICROHENRIES.
ALL REFERENCE DIODE VOLTAGES ARE ±5%.
RESISTANCE OF INDUCTORS IS LESS THAN ONE OHM, UNLESS OTHERWISE INDICATED.

C. WHEN MAKING RESISTANCE MEASUREMENTS AT TRANSISTOR POINTS USE HIGHEST POSSIBLE OHMMETER RANGE TO PREVENT DAMAGE TO TRANSISTORS.

D. ——▶—— INDICATES SIGNAL FLOW.

E. ——◀◀—— INDICATES FEEDBACK.

F. ——≀≀—— INDICATES BREAK POINTS USED TO REDUCE DIAGRAM CLUTTER. TO FIND MATING END OF BROKEN LINE PROCEED IN PARALLEL WITH DIAGRAM BORDER.

PART LOCATION INDEX

REF. DES.	ZONE	REF. DES.	ZONE	REF. DES.	ZONE
A2A6A16C1	*	A2A6A16C17	7E	A2A6A16C33	5B
C2	10H	C18	13C	C34	4B
C3	12E	C19	*	C35	4A
C4	4C	C20	14B	C36	3B
C5	14H	C21	13A	C37	7F
C6	14J	C22	12C	C38	4H
C7	14G	C23	12C	CR1	13A
C8	13H	C24	10C	CR2	10B
C9	13G	C25	9D	CR3	10B
C10	12H	C26	*	CR4	11E
C11	12H	C27	*	CR5	8B
C12	9J	C28	8B	E1	15H
C13	8J	C29	7B	E2	15G
C14	11J	C30	7B	E3	3K
C15	3E	C31	7B	E4	3J
C16	5E	C32	6B	E5	4G

* NOT USED

NOTES FOR FIGURE 5-42 (CONTINUED)

PART LOCATION INDEX (CONTINUED)

REF. DES.	ZONE	REF. DES.	ZONE	REF. DES.	ZONE
A2A6A16E6	3G	A2A6A16Q3	7G	A2A6A16R28	9C
E7	4J	Q4	7G	R29	9B
E8	3H	Q5	5B	R30	9B
L1	*	Q6	6C	R31	*
L2	*	R1	15G	R32	8B
L3	12E	R2	14H	R33	7B
L4	*	R3	14G	R34	5B
L5	7B	R4	14G	R35	4A
L6	14J	R5	14G	R36	4A
L7	13J	R6	13J	R37	6C
P1-A1	16H	R7	13J	R38	11F
P1-A2	2J	R8	13H	R39	6G
P1-A3	2G	R9	13G	TP1	15C
P1-A4	2H	R10	12H	TP2	4H
P1-1	*	R11	12H	TP3	4JF
P1-2	*	R12	9G	TP4	4K
P1-3	16C	R13	8G	U1	11,12H;
P1-4 thru P1-8	*	R14	7H		5J,K
		R15	7H	U2	10H
		R16	*	U3	8H
P1-9	16F	R17	14C	U4	4-6G,5H
P1-10	16F	R18	13D	U5	7E
P1-11	16E	R19	13D	U6	5E
P1-12 thru P1-14	*	R20	14B	U7	3E
		R21	14B	U8	12C
		R22	14B	U9	11C
P1-15	16E	R23	13B	U10	9B
P1-16	16D	R24	13B	U11	6B
P1-17	16D	R25	10C	U12	3A;3,4B
Q1	14H	R26	10C	U13	9F
Q2	13H	R27	9D	U14	13C

* NOT USED

NOTES FOR FIGURE 5-42 (CONTINUED)

TRANSISTOR VOLTAGE CHART			
	E	B	C
Q1	+0.75 V	+1.32 V	+5.0 V
Q2	+1.8 V	+2.22 V	+5.0 V
Q3	0 V	+0.63 V	+0.03 V
Q4	0 V	+0.03 V	+5.0 V
Q5	0 V	0 V	0 V
Q6	+5.0 V	+5.0 V	0 V

INTEGRATED CIRCUIT VOLTAGE CHART (ALL VALUES +V)								
	PINS							
	1	2	3	4	5	6	7	8
U1	1.46	1.32	1.22	2.16	2.0	1.92	0	3.1
U2	1.30	0	1.94	1.94	-	-	0.83	0
U3	0.88	0	2.0	2.0	-	-	0.88	0
U4	1.95	3.9	1.96	0.04	0.11 or 4.2	3.9	0	0.04
U5*	0.11 or 4.2	0	-	-	-	0.11 or 4.2	0	0.11 or 4.2
U6*	0	0.05	0	0	5.0	0	0.17 or 4.3	0
U7*	0	0.05	5.0	5.0	5.0	0	0	0
U8*	5.0	5.3	3.6	3.6	0	1.95	0	-
U9*	0.1	0.07	1.95	3.85	1.65	-	0	-
U10*	-	1.92	1.23	0	-	0	10.0	-
U11*	0	-	0	-	0	-	0	0
U12*	1.45	0.88	-	-	-	-	0	3.5
U13*	-	-	-	-	-	-	0	-
U14*	-	4.15 (typ.)	3.8 (typ.)	0	-	5.3 (typ.)	10.0	-

* U5 thru U14 used only in vernier mode

NOTES FOR FIGURE 5-42 (CONTINUED)

INTEGRATED CIRCUIT VOLTAGE CHART (CONTINUED) (ALL VALUES +V)								
	PINS							
	9	10	11	12	13	14	15	16
U1	0.88	1.32	2.16	1.30	2.16	5.0	X	X
U2	0.88	-	-	2.0	2.0	0	0.83	5.0
U3	0.88	-	-	0.88	2.0	0	0.88	5.0
U4	5.0	5.0	1.95	2.0	5.0	5.0	X	X
U5*	-	-	-	0	0.11 or 4.2	5.0	X	X
U6*	0.17 or 4.3	0	-	-	0.11 or 4.2	-	0.17 or 4.3	5.0
U7*	0.17 or 4.3	0	-	-	-	-	0.17 or 4.3	5.0
U8*	0	-	-	-	-	5.0	X	X
U9*	-	2.36	0.07	-	3.85	5.0	X	X
U10*	X	X	X	X	X	X	X	X
U11*	-	0	-	0	-	0	X	X
U12*	0.88	0.05	3.5	0.05	3.5	5.0	X	X
U13*	-	-	-	-	-	5.0	X	X
U14*	X	X	X	X	X	X	X	X

* U5 thru U14 used only in vernier mode

SPECIFIC NOTES

1. TRANSISTOR AND INTEGRATED CIRCUIT VOLTAGE MEASUREMENTS TAKEN TO GROUND USING MULTIMETER 55026-26D-6XLP WITH EQUIPMENT CONTROLS SET FOR LSB OPERATION IN NONVERNIER MODE.

2. * MAXIMUM DC RESISTANCE OF INDUCTORS IS AS FOLLOWS:

L6	1.0 OHM
L7	8.0 OHMS

NOTES FOR FIGURE 5-42 (CONTINUED)

SPECIFIC NOTES (CONTINUED)

3. THE INFORMATION CONTAINED IN THESE NOTES IS ORGANIZED TO ALLOW TROUBLESHOOTING OF THE VARIOUS RECEIVER FUNCTIONS IN AN OPERATING R-1051H/URR RECEIVER. FOR DEPOT MAINTENANCE THE MODULE UNDER TEST WILL BE OPERATED IN TRANSLATOR/SYNTHESIZER TEST FIXTURE TS-3665/WRC-1. TEST FIXTURE CONTROL SETTINGS SHALL CORRESPOND TO THE SETTINGS OF THEIR COUNTERPART CONTROLS OF THE R-1051H/URR.

4. INTEGRATED CIRCUITS U1 AND U12 ARE TYPE 5404.

5. INTEGRATED CIRCUIT U4 IS TYPE 5400.

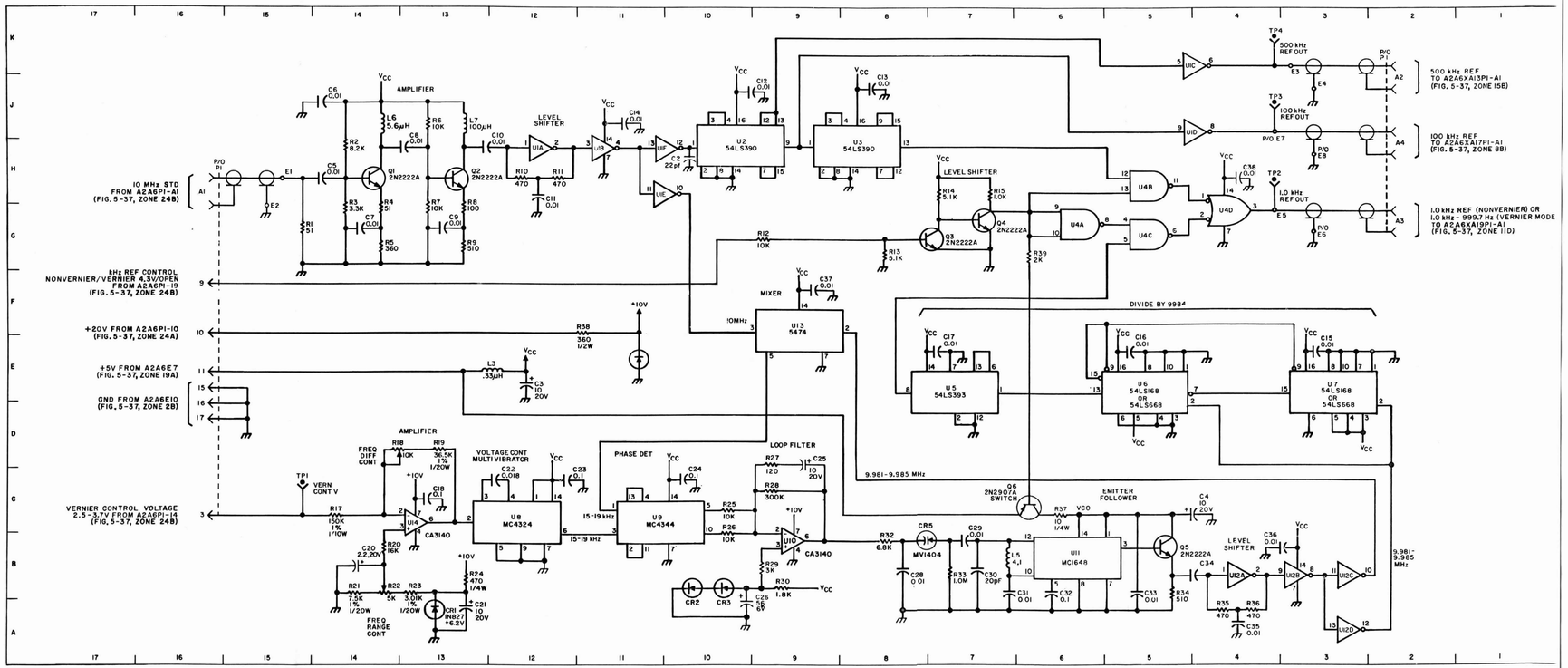

Figure 5-42. Frequency Generator Subassembly A2A6 Maintenance Schematic Diagram

NOTES FOR FIGURE 5-43

GENERAL NOTES

A. PARTIAL REFERENCE DESIGNATIONS ARE SHOWN. FOR COMPLETE DESIGNATIONS PREFIX WITH NUMBERS OF NEXT HIGHER ASSEMBLY.

B. UNLESS OTHERWISE SPECIFIED:
ALL RESISTANCE IS IN OHMS, K = 1000
ALL RESISTORS ARE 1/4 WATT, ±5%
ALL CAPACITANCE IS IN MICROFARADS, PF = PICOFARADS
ALL COIL RESISTANCES ARE LESS THAN 1 OHM
ALL INDUCTANCE IS IN MICROHENRIES

C. WHEN MAKING RESISTANCE MEASUREMENTS AT TRANSISTOR POINTS, USE HIGHEST POSSIBLE OHMMETER RANGE TO PREVENT DAMAGE TO TRANSISTORS.

D. ——▶—— INDICATES SIGNAL FLOW.

E. ——◀◀—— INDICATES FEEDBACK.

F. ——⌇⌇—— INDICATES BREAK POINTS USED TO REDUCE DIAGRAM CLUTTER. TO FIND MATING END OF BROKEN LINE PROCEED FROM BREAK POINT IN PARALLEL WITH DIAGRAM BORDER.

SPECIFIC NOTES

1. THE DIVISION RATIOS FOR THE PROGRAMMABLE DIVIDERS ARE AS FOLLOWS:

LOW BAND	224 - 233
HIGH BAND	324 - 333

2. TRANSISTOR AND INTEGRATED CIRCUIT VOLTAGE MEASUREMENTS TAKEN TO GROUND USING MULTIMETER 55026-260-6XLP WITH EQUIPMENT CONTROLS SET FOR 2.11 MHz OPERATION IN LSB MODE.

3. EITHER U2A OR U2B MAY BE USED; U2A IS PREFERRED.

4. VALUES FOR INDUCTOR A2A6A17A1L1 ARE SELECTED ACCORDING TO THE SPECIFICATIONS FOR VARACTOR DIODE A2A6A17A1CR1 AND CORRESPOND AS FOLLOWS:

VARACTOR DIODE, COLOR CODE	INDUCTANCE, UH
RED	0.82
BROWN	0.68
BLACK	0.56

NOTES FOR FIGURE 5-43 (CONTINUED)

SPECIFIC NOTES (CONTINUED)

5. MAXIMUM RESISTANCE OF INDUCTORS FOLLOWS: L8 - 1 OHM.

6. THE INFORMATION CONTAINED IN THESE NOTES IS ORGANIZED TO ALLOW TROUBLESHOOTING OF THE VARIOUS RECEIVER FUNCTIONS IN AN OPERATING R-1051H/URR RECEIVER. FOR DEPOT MAINTENANCE THE MODULE UNDER TEST WILL BE OPERATED IN TRANSLATOR/SYNTHESIZER TEST FIXTURE TS-3665/WRC-1. TEST FIXTURE CONTROL SETTINGS SHALL CORRESPOND TO THE SETTINGS OF THEIR COUNTERPART CONTROLS OF THE R-1051H/URR.

PART LOCATION INDEX

REF. DES.	ZONE	REF. DES.	ZONE	REF. DES.	ZONE
A2A6A17C1	13J	A2A6A17C34	14E	A2A6A17P1-10 thru P1-12	*
C2	10H	C35	13K	P1-13	15D
C3	11G	C36	11H	P1-14	15C
C4	7D	CR1	11J	P1-15	15C
C5	14F	E1**	14H	Q1	6H
C6	6K	E2**	15H	Q2	3H
C7 thru C12	*	E3**	2J	Q3	13D
C13	5J	E4**	2H	Q4	7B
C14	5J	L1	*	Q5	6B
C15	5H	L2	*	Q6	13J
C16	6G	L3	6J	Q7	12H
C17	5H	L4	5J	Q8	12J
C18	4H	L5	5H	R1	15F
C19	4J	L7	4H	R2	14K
C20	3J	L8	4J	R3	13K
C21	3J	L9	*	R4	12K
C22	*	L10	15E	R5	12J
C23	14E	P1	15H,2J	R6	12H
C24	*	P1A1	15H	R7	12G
C25	10F	P1A2	2J	R8	11H
C26	5F	P1-1	15F	R9	6J
C27	5G	P1-2	*	R10	6H
C28	5F	P1-3	15A	R11	6H
C29	10C	P1-4	15B	R12	3J
C30	3H	P1-5	15A	R13	3H
C31	7C	P1-6	15A	R14	3H
C32	6D	P1-7	15D	R15	5F
C33	14F	P1-8	15E	R16	14D
		P1-9	*		

* NOT USED
** WIRING TERMINATIONS - FOR REFERENCE ONLY

NOTES FOR FIGURE 5-43 (CONTINUED)

PART LOCATION INDEX (CONTINUED)

REF. DES.	ZONE	REF. DES.	ZONE	REF. DES.	ZONE
A2A6A17R17	9B	A2A6A17R32	11H	A2A6A17A1C1	10H
R18	5D	R33	11H	C2	9J
R19	7D	R34	6K	C3	11G
R20	*	R35	14G	C4	9H
R21	*	R36	3J	C5	8H
R22	4A	TP1	14J	C6	7H
R23	5A	TP2	14J	C7	9J
R24	4A	TP3	3J	CR1	10J
R25	5B	U1	13H	L1	9H
R26	14D	U2	3E,6E	R1	10J
R27	13E	U3	6C	R2	9H
R28	7B	U4	8C	R3	9J
R29	6B	U5	10C	R4	7H
R30	7C	U6	10F	U1	8H
R31	3H				

* NOT USED
** WIRING TERMINATION - FOR REFERENCE ONLY

TRANSISTOR DC VOLTAGE CHART

	E	B	C
Q1	+2.41V	+3.06V	+4.87V
Q2	+1.15V	+1.82V	+2.39V
Q3	0V	+0.68V	+0.02V
Q4	0V	+0.68V	+0.04V
Q5	0V	0V	+0.04V
Q6	0V	+0.82V	+0.18V
Q7	+3.88V	+3.25V	+3.90V
Q8	+13.90V	+16.10V	+3.90V

NOTES FOR FIGURE 5-43 (CONTINUED)

INTEGRATED CIRCUIT VOLTAGE CHART
(ALL VALUES IN POSITIVE VOLTS)

	PINS							
	1	2	3	4	5	6	7	8
U1	0.85	3.87	4.2	-	-	-	0	-
U2	5.0	3.95	3.9	3.9	3.95	5.0	2.2	0
U3	0	0.50	0.70	3.2	1.55	0.55	0.55	0
U4	0	2.35	0.05	5.0	0	0	0	0
U5	0	2.2	0.05	5.0	0	0	3.82	0
U6	0	2.2	0	0	0	5.0	2.3	0
	9	10	11	12	13	14	15	16
U1	-	-	-	-	4.2	5.0	-	-
U2	3.2	3.2	0	0	3.95	3.95	3.9	5.0
U3	0	4.1	2.0	3.2	4.3	2.2	5.0	5.0
U4	4.2	0	0.75	1.32	1.5	1.8	3.5	5.0
U5	4.2	0	0.10	0.1	0.62	1.77	2.45	5.0
U6	4.2	0	2.6	0.77	0.77	0.82	4.2	5.0

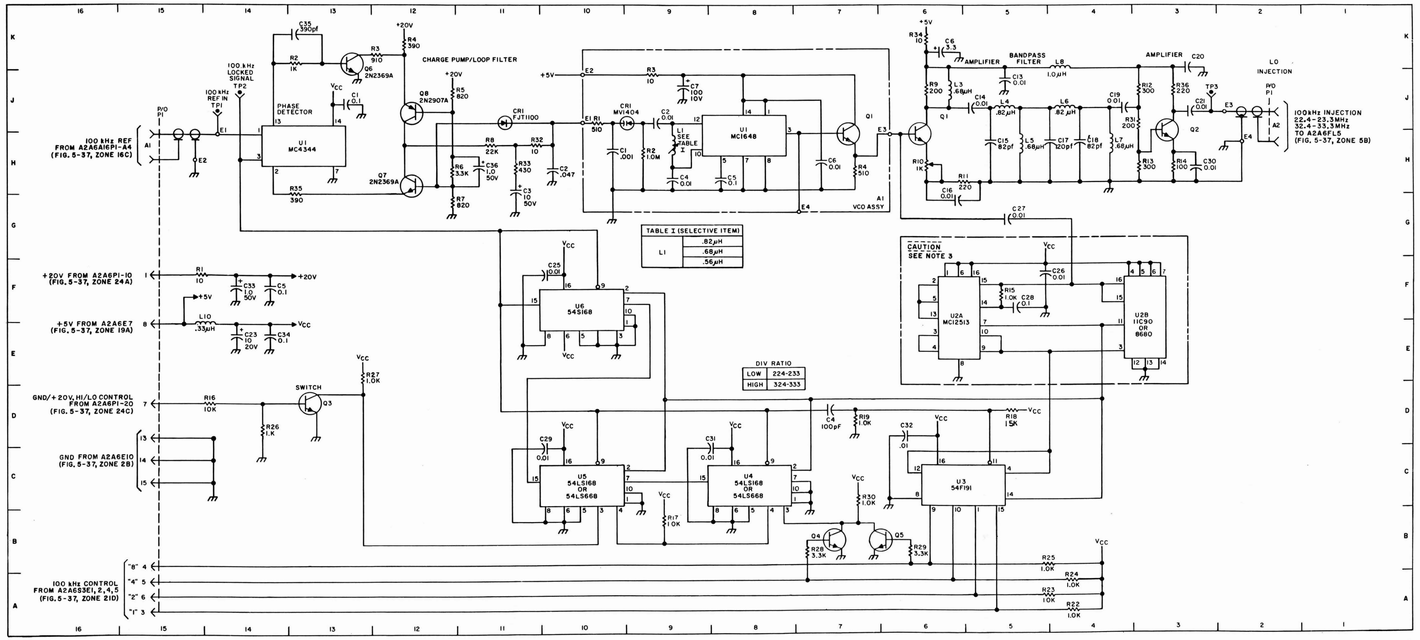

Figure 5-43. 100 kHz Synthesizer Subassembly A2A6A17, Maintenance Schematic Diagram

NOTES FOR FIGURE 5-44

GENERAL NOTES

A. PARTIAL REFERENCE DESIGNATIONS ARE SHOWN. FOR COMPLETE DESIGNATION PREFIX WITH NUMBERS OF NEXT HIGHER ASSEMBLY.

B. UNLESS OTHERWISE SPECIFIED:
ALL RESISTORS ARE IN OHMS, ±5%, 1/4 WATT.
ALL CAPACITORS ARE IN MICROFARADS.
RESISTANCE OF INDUCTORS IS LESS THAN ONE OHM.

C. WHEN MAKING RESISTANCE MEASUREMENTS AT TRANSISTOR POINTS, USE HIGHEST POSSIBLE OHMMETER RANGE TO PREVENT DAMAGE TO TRANSISTORS.

D. ◄—— INDICATES FEEDBACK; ——► INDICATES SIGNAL FLOW.

E. ——≀—— INDICATES BREAK POINTS USED TO REDUCE DIAGRAM CLUTTER. TO FIND MATING END OF BROKEN LINE PROCEED IN PARALLEL WITH DIAGRAM BORDER.

TRANSISTOR DC VOLTAGE CHART

	E	B	C
Q1	0	+0.83	+0.16
Q2	+8.2	+8.4	+4.50
Q3	+3.8	+1.6	+4.50

INTEGRATED CIRCUIT DC VOLTAGE CHART
(ALL VALUES IN VOLTS)

	PINS							
	1	2	3	4	5	6	7	8
U1	2.0	3.8	4.42	0	0	1.9	0	0
U2	1.45	1.3	1.3	1.55	1.55	1.3	0	0.15
U3	5.0	1.35	1.55	0	0	2.5	0.87	0

	9	10	11	12	13	14	15	16
U1	0	0	1.6	3.8	3.4	5.0	X	X
U2	1.6	0.15	1.62	1.42	2.5	5.0	X	X
U3	0	5.0	4.4	0.25	4.4	1.3	0	5.0

SPECIFIC NOTES

1. TRANSISTOR AND INTEGRATED CIRCUIT VOLTAGE MEASUREMENTS TAKEN TO GROUND USING MULTIMETER 55026-260-6XLP WITH EQUIPMENT CONTROLS SET FOR 2.0011 MHZ OPERATION IN LSB MODE.

SPECIFIC NOTES (CONTINUED)

PART LOCATION INDEX

REF. DES.	ZONE	REF. DES.	ZONE	REF. DES.	ZONE
A2A6A19C1	10G	A2A6A19L9	5C	A2A6A19R17	*
C2	8E	L10	5C	R18	11G
C3	7E	P1	11H,2H	R19	10E
C4	7E	P1-1	*	TP1	11D
C5	10C	P1-2	12G	TP2	11D
C6	6D	P1-3	12H	TP3	3C
C7	6E	P1-4	12F	U1	10D
C8	4E	P1-5	12F	U2	5D,E;6E
C9	7C	P1A1	12D	U3	4E
C10	7C	P1A2	2H	A1	3H
C11	6C	P1A3	12C	C1	6G
C12	5C	P1A4	2B	C2	6G
C13	9H	Q1	8E	C3	6G
C14	10G	Q2	9F	C4	5G
**E1	11C	Q3	9D	C5	5G
**E2	11C	R1	10F	C6	4G
**E3	11D	R2	10F	C7	6H
**E4	11D	R3	*	CR1	6G
**E5	3B	R4	9C	E1	7G
**E6	3B	R5	9F	E2	7H
**E7	*	R6	9E	E3	3F
E8	3H	R7	8E	E4	3H
L1	11H	R8	7D	L1	5G
L2	10H	R9	8E	Q1	4G
L3	*	R11	6D	R1	7G
L4	*	R12	6D	R2	6G
L5	*	R13	7C	R3	7H
L6	6C	R14	4C	R4	3G
L7	6C	R15	4C	U1	5G
L8	6C	R16	4C		

* NOT USED
** WIRING TERMINATION - FOR REFERENCE ONLY.

NOTES FOR FIGURE 5-44 (CONTINUED)

SPECIFIC NOTES (CONTINUED)

2. INTEGRATED CIRCUIT U2 IS TYPE 54S04.

3. MAXIMUM RESISTANCE OF INDUCTORS FOLLOWS:

L7	1.0 OHM
L9	1.0 OHM

4. THE INFORMATION CONTAINED IN THESE NOTES IS ORGANIZED TO ALLOW TROUBLESHOOTING OF THE VARIOUS RECEIVER FUNCTIONS IN AN OPERATING R-1051H/URR RECEIVER. FOR DEPOT MAINTENANCE THE MODULE UNDER TEST WILL BE OPERATED IN TRANSLATOR/SYNTHESIZER TEST FIXTURE TS-3665/WRC-1. TEST FIXTURE CONTROL SETTINGS SHALL CORRESPOND TO THE SETTINGS OF THEIR COUNTERPART CONTROLS OF THE R-1051H/URR. REFERENCE TABLE 6-6 FOR DISTORTION MEASUREMENT PROCEDURE.

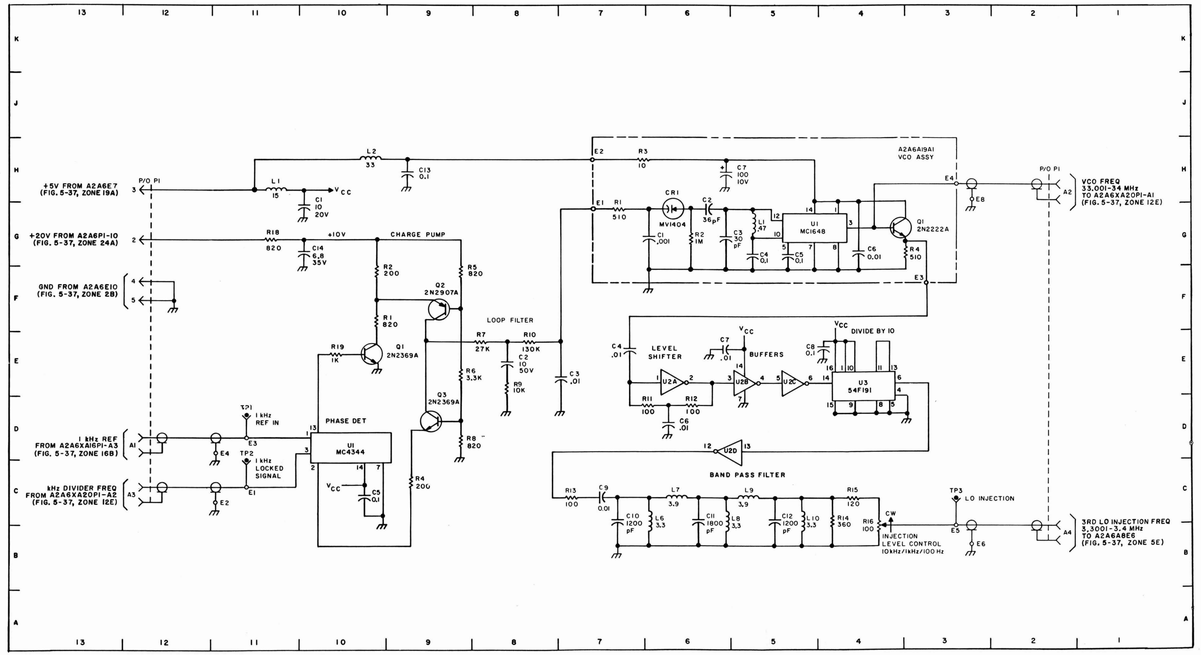

Figure 5-44. 10 kHz/1 kHz/100 Hz Synthesizer Subassembly (No. 2) A2A6A19, Maintenance Schematic Diagram

NOTES FOR FIGURE 5-45

GENERAL NOTES

A. PARTIAL REFERENCE DESIGNATIONS ARE SHOWN. FOR COMPLETE DESIGNATION PREFIX WITH A2A6A20.

B. UNLESS OTHERWISE SPECIFIED:
ALL RESISTORS ARE IN OHMS, ±5%, 1/4 WATT.
ALL CAPACITORS ARE IN MICROFARADS.
RESISTANCE OF INDUCTORS IS LESS THAN ONE OHM.

C. WHEN MAKING RESISTANCE MEASUREMENTS AT RESISTOR POINTS, USE HIGHEST POSSIBLE OHMMETER RANGE TO PREVENT DAMAGE TO TRANSISTORS.

D. ——◀◀—— INDICATES FEEDBACK. ——▶—— INDICATES SIGNAL FLOW.

E. ——≀≀—— INDICATES BREAK POINTS USED TO REDUCE DIAGRAM CLUTTER. TO FIND MATING END OF BORKEN LINE PROCEED IN PARALLEL WITH DIAGRAM BORDER.

PART LOCATION INDEX

REF. DES.	ZONE	REF. DES.	ZONE	REF. DES.	ZONE
A2A6A20C1	10K	A2A6A20Q1	14H	A2A6A20R14	14E
C2	11E	Q2	13H	R15	12C
C3	9E	Q3	14F	R16	14C
C4	9E	Q4	13F	R17	10K
C5	3F	Q5	14D	R18	8B
C6	2F	Q6	13E	R19	7B
C7	10E	Q7	14C	R20	7B
C8	7E	Q8	13C	R21	7B
C9	6F	R1	14H	R22	11H
C10	4F	R2	15H	R23	10G
C11	14E	R3	14F	R24	12B
C12	13J	R4	15F	R25	12B
C13	10J	R5	14D	R26	11B
C14	10H	R6	15E	R27	11B
C15	13J	R7	14C	R28	13J
E1	13J	R8	15C	TP1	13K
E2	14J	R9	11C	TP2	7J
E3	7J	R10	14H	U1	9-11H,K
E4	7H	R11	11C	U2	10F
L1	15F	R12	14G	U3	8D
P1	1H,16K	R13	12C	U4	8F

NOTES FOR FIGURE 5-45 (CONTINUED)

PART LOCATION INDEX (CONTINUED)

REF. DES.	ZONE	REF. DES.	ZONE	REF. DES.	ZONE
A2A6A20U5	3F	A2A6A20U7	10D	A2A6A20U9	6F
U6	2F	U8	6D	U10	5F

TRANSISTOR VOLTAGE CHART

	E	B	C
Q1	0 V	0 V	+0.68 V
Q2	0 V	+0.68 V	+0.02 V
Q3	0 V	0 V	+0.68 V
Q4	0 V	+0.68 V	+0.02 V
Q5	0 V	0 V	+0.68 V
Q6	0 V	+0.68 V	+0.04 V
Q7	0 V	0 V	+0.02 V
Q8	0 V	+0.02 V	+5.00 V

INTEGRATED CIRCUIT VOLTAGE CHART
(ALL VALUES IN POSITIVE VOLTS)

	PINS							
	1	2	3	4	5	6	7	8
U1	5.0	3.9	3.9	3.9	3.9	5.0	2.05	0
U2	0.17	-	-	4.25	5.0	-	-	0
U3	0.17	0.17	0.17	4.2	4.2	-	-	0
U4	0	2.04	0.17	0.17	0.17	4.2	0	0
U5	0	2.04	5.0	5.0	0	0	3.7	0
U6	0	2.04	0	0	0	5.0	4.2	0
U7	4.15	0.17	0.17	4.15	4.2	-	-	0
U8	4.2	0.2	0.2	4.2	4.2	0.18	-	0
U9	0	2.04	4.2	0.2	0.2	4.2	3.7	0
U10	0	2.04	4.2	4.2	0.18	0	3.7	0
	9	10	11	12	13	14	15	16
U1	4.25	4.25	-	0	3.9	3.85	3.8	5.0
U2	4.15	0.17	2.0	4.25	-	2.04	4.15	5.0
U3	-	5.0	0	0	0	4.2	0	5.0
U4	4.4	0	-	-	-	-	3.7	5.0
U5	4.4	4.2	-	-	-	-	4.2	5.0
U6	4.4	0	-	-	-	-	4.2	5.0
U7	-	5.0	0.03	0.03	0.03	0	0	5.0
U8	-	0	0	0	0	4.2	0	5.0
U9	4.4	0	-	-	-	-	3.8	5.0
U10	4.4	3.8	-	-	-	-	4.4	5.0

NOTES FOR FIGURE 5-45 (CONTINUED)

SPECIFIC NOTES

1. TRANSISTOR AND INTEGRATED CIRCUIT VOLTAGE MEASUREMENTS TAKEN TO GROUND (A2A6A18E4) USING MULTIMETER 55026-260-6XLP WITH TEST FIXTURE CONTROLS SET FOR 2.0011 MHZ OPERATION IN LSB MODE.

2. ALL TRANSISTORS ARE 2N2222A.

3. EITHER U1A OR U1B MAY BE USED; U1A IS PREFERRED.

4. THE INFORMATION CONTAINED IN THESE NOTES IS ORGANIZED TO ALLOW TROUBLESHOOTING OF THE VARIOUS RECEIVER FUNCTIONS IN AN OPERATING R-1051H/URR RECEIVER. FOR DEPOT MAINTENANCE THE MODULE UNDER TEST WILL BE OPERATED IN TRANSLATOR SYNTHESIZER TEST FIXTURE TS-3665/WRC-1. TEST FIXTURE CONTROL SETTINGS SHALL CORRESPOND TO THE SETTINGS OF THEIR COUNTERPART CONTROLS OF THE R-1051H/URR.

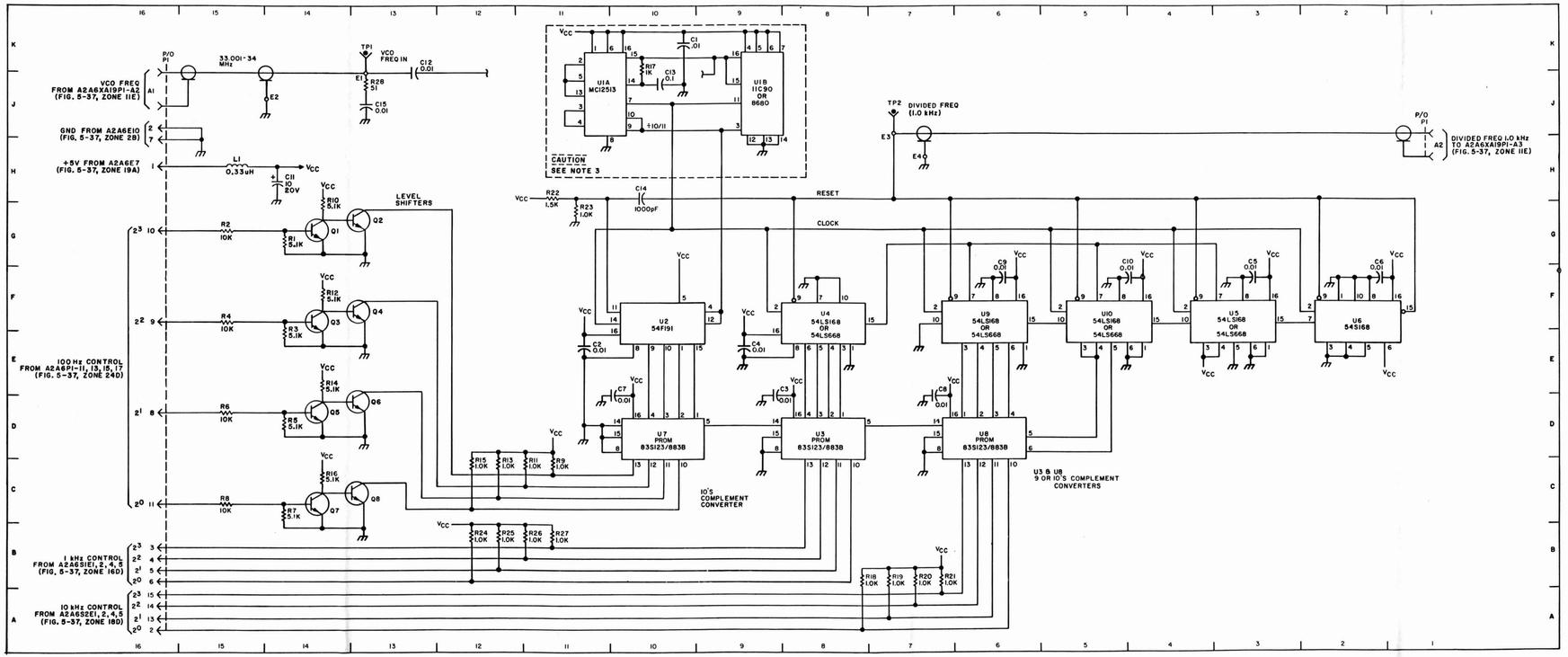

Figure 5-45. 10 kHz/1 kHz/100 Hz Synthesizer Subassembly (No. 1) A2A6A20, Maintenance Schematic Diagram

NOTES FOR FIGURE 5-46

GENERAL NOTES

A. SOLID CIRCLES INDICATE THAT FRONT AND REAR OF PRINTED WIRING BOARD ARE CONNECTED TOGETHER AT THAT POINT.

B. SWITCH WIPERS SHOWN IN 00 MHZ POSITION.

C. SWITCH ASSEMBLY A2A7A1 IS LOCATED CLOSEST TO FRONT PANEL.

D. MHz TUNING SHAFTS THROUGH LEFT AND RIGHT HAND SWITCH ROTORS MOVE ALL 10 MHZ OR 1 MHZ WIPERS IN UNISON.

E. REFER TO TABLE 3-2 FOR CODE OUTPUTS CORRESPONDING TO POSITIONS TO 10 MHz AND 1 MHz SWITCH WIPERS.

F. A2A7P1 CONNECTS TO A2J8. SEE FIGURE 5-32, ZONES 42B, D.

G. PLUG A2A7P1 WIRING DATA:

FROM	TO	FUNCTION
A1E21	P1-1	BANDSWITCH CODE FOR RF AMPLIFIER
A1E22	P1-2	ASSEMBLY A2A4.
A1E19	P1-3	
A1E20	P1-4	
A1E27	P1-5	
A2E25	P1-21	10 MHZ AND 1 MHZ DIGIT SELECT CODE
A4E36	P1-22	FOR SYNTHESIZER SUBASSEMBLY A2A6A13.
A4E35	P1-23	
A4E38	P1-24	
A4E37	P1-25	
A3E32	P1-13	BANDSWITCH CODE FOR EXTERNAL RF POWER
A3E31	P1-14	AMPLIFIER (XMTR). NOT USED (RCVR).
A3E34	P1-15	
A3E33	P1-16	
A2E26	P1-17	
A2E24	P1-6	HI-LO BAND CONTROL TO RELAY A2A13K2.
A5E39	P1-7	TUNE RELAY GND TO A2A13K1-X1.
A3E29	P1-10	100 KHZ IMAGE CONTROL FROM
A3E30	P1-12	A2A23S5-R (XMTR). NOT USED (RCVR).
A5E42	P1-11	GND PULSE TO A2A22K6-X1 (XMTR). NOT USED (RCVR).

NOTES FOR FIGURE 5-46

GENERAL NOTES

FROM	TO	FUNCTION
A5E41	P1-9	GROUND INPUT FROM A2E7 (RCVR) OR A2E1 (XMTR).
A3E28	P1-18	RF POWER AMPL RANGE (XMTR). NOT USED (RCVR).
A5E40	P1-8	RESERVED.
A1E18	P1-19	
A3E23	P1-20	

1. FOLLOWING TERMINALS OF SWITCH ASSEMBLIES ARE CONNECTED TOGETHER:

E1 OF A1 THRU A5.
E2 OF A1 AND A2.
E3 OF A1 AND A2.
E4 OF A1 AND A2.
E5 OF A1 AND A2.
E6 OF A1 AND A2.
E7 OF A2 AND A3.
E8 OF A2 THRU A4.
E9 OF A2 THRU A4.
E10 OF A2 THRU A4.
E11 OF A2 THRU A4.
E12 OF A2 THRU A4.
E13 OF A2 THRU A4.
E14 OF A2 AND A3.
E15 OF A2 AND A3.
E16 OF A2 AND A3.
E17 OF A2 AND A3.

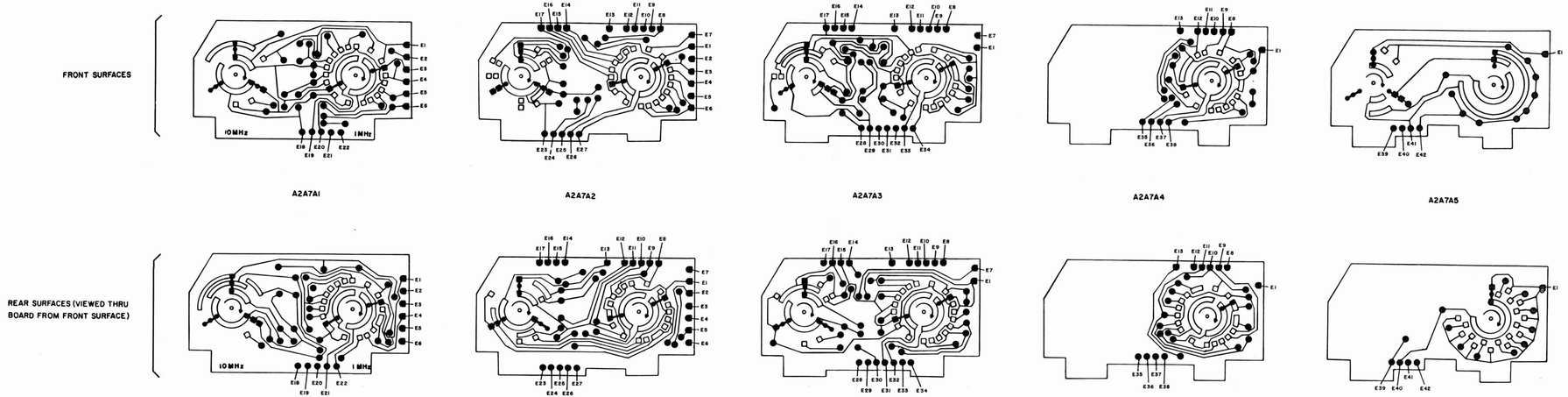

Figure 5-46. Code Generator Assembly A2A7, Maintenance Schematic Diagram

CHAPTER 6

CORRECTIVE MAINTENANCE

6-1. INTRODUCTION.

6-2. This chapter contains all instructions required to adjust and aline the R-1051H/URR and its major assemblies and subassemblies, and to remove, repair, and test repairable assemblies and subassemblies. This chapter is divided into two sections. Section I contains information and procedures for adjustment and alinement of electronic circuits and mechanical assemblies; Section II contains repair instructions which cover disassembly, means of access, parts removal and complex repair actions.

6-3. Many of the procedures in this chapter can be accomplished at organizational level. However, Mode Selector Assembly A2A1, IF/Audio Amplifier Assemblies A2A2 and A2A3, RF Amplifier Assembly A2A4, Frequency Standard Assembly A2A5 and Translator/Synthesizer Assembly A2A6 are designated as depot repairable only. Therefore no corrective maintenance should be performed on these assemblies at organizational level except for the overall adjustments listed in table 6-1.

SECTION I

ADJUSTMENTS AND ALINEMENTS

6-4. GENERAL.

6-5. This section contains all information and procedures required to perform all necessary adjustments and alinements of the R-1051H/URR, both at organizational and depot level. Included are adjustment and alinement procedures for electronic assemblies and adjustment procedures for mechanical assemblies. Test equipment setup illustrations are provided where necessary to support the procedures.

6-6. ELECTRONIC ADJUSTMENTS AND ALINEMENTS.

6-7. PROCEDURES. Overall adjustment and alinement procedures for the R-1051H/URR are given in table 6-1; procedures for the individual assemblies and subassemblies within the receiver are given in tables 6-2 through 6-7. Each adjustment and alinement table gives the test equipment requirements, step-by-step procedures, adjustment values and references to supporting illustrations showing the necessary test setups.

NOTE

Tables 6-2 through 6-6 are for depot use only.

6-8. TEST EQUIPMENT REQUIRED. All adjustment and alinement procedures in this chapter use the approved test equipments listed in table 1-5. All equipments are organizational types with the exception of the special depot test sets required for the assemblies designated depot repairable.

6-9. MECHANICAL ADJUSTMENTS.

6-10. DRIVE CHAIN ADJUSTMENTS. To obtain proper positioning of front panel kHz controls with respect to seated position of the detent springs, proceed as follows:

a. Set MODE SELECTOR Switch A2-A14S2 to OFF.
b. Loosen front panel screws and slide chassis assembly out of case. Ensure that the following conditions are met:

(1) RF Amplifier Assembly A2A4 is correctly installed.
(2) Translator/Synthesizer Assembly A2A6 is correctly installed.
(3) All couplers are properly engaged.
(4) All kHz dials are in 0 position.

c. Tilt chassis assembly 90 degrees to expose bottom.
d. See figure 7-4. On each of the kHz controls take up any existing slack in the associated drive chain by holding the associated tensioning idler gear (A2MP16B, 17B, 18B, Figure 7-4) tightly against the drive chain while observing the associated dial digit. Fasten the tensioning idler gear in the position which allows no slack. If any dial digit has moved away from the center of its window while performing this step, proceed to step 5; otherwise proceed to coupler adjustment (Paragraph 6-11).
e. Rotate each of the kHz controls until the setscrews in the digital indicating dial are accessible. This will be at position 4 of the dial.
f. Loosen the two setscrews and rotate the dial to center the digit 4.
g. Apply sealing compound, Grade E per MIL-S-22473 to threads of setscrews and fasten setscrews.
h. Check mechanical action of the 100 kHz, 10 kHz and 1 kHz controls. The controls should rotate smoothly, with full detent or seating action of the detent rollers in the dual sprocket assembly (MP15, Figures 7-4 and 7-6) when a digit is centered in its window. If adjustment is required, proceed to steps 9 and/or 10, as applicable.
i. Increase or decrease detent spring tension as required. To increase tension, remove the spacer from under the end of the detent spring. To reduce tension, add another spacer under the end of the spring.
j. If it is necessary to correct the detent action, proceed as follows:
(1) Loosen the two hex-head screws on the wheel index (MP-15Z, MP15AA of Figure 7-6).

NOTE

The screws of the 10 kHz wheel index are accessible by means of a suitable open end wrench inserted behind the index.

(2) Press firmly on the detent spring above the roller while holding the kHz control to prevent rotation. The wheel index should move sufficiently to permit full detent action without disturbing dial digit centering. Tighten the two hex head screws.
(3) If dial digit centering is incorrect, repeat steps 5 through 7 above.

6-11. COUPLER ADJUSTMENT. After the drive chains have been adjusted to provide optimum detent positioning, the sprocket assembly couplers (A2MP15M, A2MP15N of Figure 7-6 and A2MP14K, A2MP14L, A2MP14M of Figure 7-5) must be adjusted for proper mechanical alinement between electrical assemblies and chain drive mechanism. Proceed as follows:

a. Remove RF Amplifier Assembly A2A4 and Translator/Synthesizer Assembly A2A6 from chassis assembly.
b. Set 100 kHz and 10 kHz controls to 1.
c. On the dual sprocket assembly (A2MP15, Figure 7-6) loosen the screws in the hub clamps (A2MP15AD, A2MP15AE, Figure 7-6).
d. With the aid of a screwdriver inserted into the coupler adjustment slot (A2MP15B, A2MP15C Figure 7-6), adjust both couplers so that the slot in each points toward, and is perpendicular to, the front panel. Tighten hub clamp screws.
e. Set all three kHz controls to 0.
f. On the triple sprocket assembly (A2MP14, Figure 7-5) loosen the screws in the hub clamps (A2MP14AC, A2MP14AD, A2MP14AE, Figure 7-5).

g. With the aid of a screwdriver inserted into the coupler adjustment slot, adjust all three couplers so that each points toward, and is perpendicular to, the rear edge of the chassis assembly. Tighten the three hub clamp screws.
h. Check tuning couplers on RF Amplifier Assembly A2A4 and Translator/Synthesizer Assembly A2A6 to be sure they will engage the chassis assembly couplers when inserted.
i. Reinstall RF Amplifier Assembly A2A4 and Translator/Synthesizer Assembly A2A6 in chassis assembly and fasten into place.
j. Slide chassis assembly into case and secure by tightening front panel screws.
k. Set MODE SELECTOR Switch A2-A14S2 to desired operating mode.

SECTION II

REPAIR

6-12. GENERAL.

6-13. This section contains instructions for the repair of assemblies and subassemblies of Radio Receiver R-1051H/URR. Instructions include removal, disassembly, inspection, replacement of parts, cleaning, reinstallation, adjustment and checkout. Where applicable, illustrations in Chapter 7 are referenced for parts locations.

NOTE

The following assemblies are to be repaired at depot only; Receiver Mode Selector Assembly A2A1, IF/Audio Assemblies A2A2 and A2A3, RF Amplifier Assembly A2A4, Frequency Standard Assembly A2A5 and Translator/Synthesizer Assembly A2A6.

6-14. INSPECTION. Inspect removed assemblies, subassemblies and parts in accordance with the criteria listed in table 6-8.

6-15. REPAIR METHODS. After a malfunction has been traced to a specific assembly or subassembly, repair can, in most instances, be effected by replacement of the defective component part. Disassembly shall be only to the extent required for access to the part to be replaced.

6-16. WIRE, CABLE, AND CONNECTORS. Rf connectors on assemblies A2A1, A2A2, A2A3, A2A4, A2A5, A2A6, associated mating connectors on the chassis assembly and chassis assembly connectors A1P2 and A2J22 are repairable. Repair of these connectors consists of removal and replacement of the rf inserts. Connectors within the Translator/Synthesizer are repairable only to the extent that rf inserts are replaceable. To repair a connector, proceed as follows:

a. To replace a connector rf insert (crimp type) on flexible coaxial cable:

(Text continued on page 6-67)

Table 6-1. Radio Receiver R-1051H/URR, Overall Adjustment and Alinement Procedures

STEP	TEST EQUIPMENT	PROCEDURES	ADJUSTMENT VALUE
		NOTE The receiver overall adjustment and alinement procedures are best performed in their entirety. However, if it is desired to perform an individual test step (e.g., BFO adjustment) as a result of performance or troubleshooting tests, it is necessary to perform the preliminary procedure in step 2 before beginning the adjustment procedure and to perform the terminal procedure in step 9 at the conclusion of each adjustment procedure. Those procedural steps that are unnecessary if the entire overall adjustment and alinement procedure is being performed are designated by an asterisk (*), so that they may be omitted and done only when an individual test step is being performed separately.	
1. Mechanical Check		Operate front panel frequency controls and check that digits center in windows; if they do not, adjust and aline the drive chain coupler mechanisms (Paragraph 6-9).	
2. Preliminary Procedure		a. Set MODE SELECTOR Switch A2A14S2 and LSB-USB AUDIO LEVEL switch A2A14A12S1 to OFF and set frequency controls to 2,000,000 Hz. b. Loosen front panel screws and slide chassis from case. c. Defeat interlock switch A1A2S1 by gripping plunger and pulling forward. d. Prepare test setup of figure 6-1.	
		WARNING Dangerous voltages are present in underside of chassis when interlock is defeated. Exercise all necessary precautions to avoid electrical shock.	

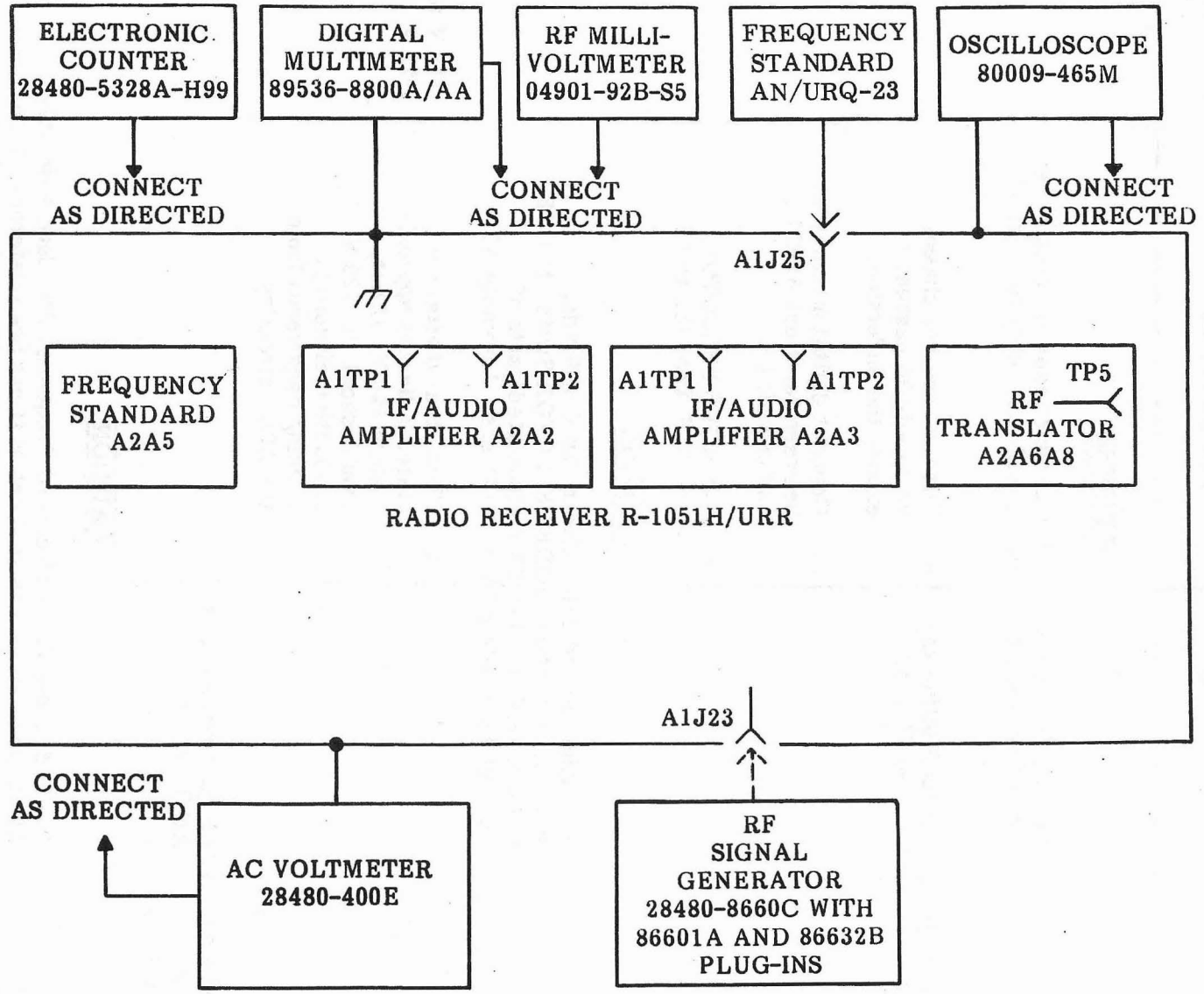

Figure 6-1. Radio Receiver R-1051H/URR, Overall Adjustment and Alinement Bench Test Setup

Table 6-1. Radio Receiver R-1051H/URR, Overall Adjustment and Alinement Procedures (Cont.)

STEP	TEST EQUIPMENT	PROCEDURES	ADJUSTMENT VALUE
		CAUTION	
		Hand guide chassis assembly cable at rear of chassis over edge of case when rotating chassis assembly to vertical position.	
3. Dc Voltage Check	Digital Multimeter 89536-8800A/AA	a. Tilt the receiver chassis vertically 90 degrees to expose the underside. b. Connect digital multimeter between terminal A2E11 (+) and chassis (-). c. Set MODE SELECTOR SWITCH A2A14S2 to LSB.	
		CAUTION	
		If multimeter indicates either +28 V or 0 Vdc, immediately return MODE SELECTOR Switch to OFF, and troubleshoot the +28 V associated parts of Control Assembly A2A13 and Chassis Assembly A2.	
		d. Check that digital multimeter indicates approximately +20 V. If not, troubleshoot the +20 V production circuitry, working backwards from the A2U1 circuitry.	+19 V to +21 V
4. Frequency Standard Adjustment	Frequency Standard AN/URQ-23		
		CAUTION	
		The 5 MHz oscillator circuit of Frequency Standard Assembly A2A5 must not be adjusted unless it has been determined that the 5 MHz output frequency is in error. Unnecessary adjustment will cause poor equipment operation that is not only difficult to correct but which requires lengthy maintenance time.	

Table 6-1. Radio Receiver R-1051H/URR, Overall Adjustment and Alinement Procedures (Cont.)

STEP	TEST EQUIPMENT	PROCEDURES	ADJUSTMENT VALUE
4. Frequency Standard Adjustment (Cont.)		a. Set MODE SELECTOR Switch A214S2 to STDBY, and 5 MHz OSC SOURCE switch A2A5A2S1 to EXT (OVEN STBY). Allow at least a 3 day warm-up period before proceeding with the final adjustment. If immediate adjustment is necessary, allow at least a 60 minute warm-up period. b. If not normally used, connect 5 MHz output of external frequency standard to EXT 5 MHZ IN jack A1J25 on rear of R-1051H/URR. c. Set 5 MHZ OSC SOURCE switch A2A5A2S1 on top of Frequency Standard Assembly A2A5 to INT/COMP. d. Set MODE SELECTOR Switch A2A14S2 to AM. e. Observe comparator lamp A2A5A2DS1 on top of Frequency Standard Assembly A2A5. Lamp will flicker at a rate equal to error frequency. Measure from time lamp is just visibly increasing in brilliance, until again just visibly increasing in brilliance. Continue with the following steps only if time measured is less than 20 seconds. NOTE A steady, dim, lamp indication may result from large error frequencies. If this is the case, proceed to step g.	

Table 6-1. Radio Receiver R-1051H/URR, Overall Adjustment and Alinement Procedures (Cont.)

STEP	TEST EQUIPMENT	PROCEDURES	ADJUSTMENT VALUE
4. Frequency Standard Adjustment (Cont.)		f. Rotate FINE FREQUENCY ADJUST control A2A5A1C2 on top of Frequency Standard Assembly A2A5 one rotation at a time until comparator lamp changes brilliance as slowly as possible.	Lamp flickers slower than one cycle in 20 seconds
		g. If lamp flickers more than once in 20 seconds, return FINE FREQUENCY ADJUST control to midrange (index 15). Then rotate COARSE FREQUENCY ADJUST A2A5-A1C3 a small amount and repeat step f.	
		h. Repeat steps f. and g. until time measured is in excess of 20 seconds over a 5 minute observation period.	
		*i. Set 5 MHZ OSC SOURCE switch A2A5A2S1 to EXT NORMAL.	
		j. Disconnect external frequency standard from jack A1J25 if not normally used.	
		*k. Set MODE SELECTOR Switch A2A14S2 to STDBY.	
5. BFO Frequency Adjustment	Electronic Counter 28480-5328A-H99	a. Set MODE SELECTOR Switch A2A14S2 to CW, MGC/AGC Switch A2A14S3 to SLOW, frequency controls to 5.000 MHz and Hz Switch A2A14-A11S1 to 000.	
		*b. Rotate 5 MHZ OSC SOURCE switch A2A5A2S1 on Frequency Standard Assembly A2A5 to INT/COMP.	
	* Omit if performing complete alinement		

Table 6-1. Radio Receiver R-1051H/URR, Overall Adjustment and Alinement Procedures (Cont.)

STEP	TEST EQUIPMENT	PROCEDURES	ADJUSTMENT VALUE
5. BFO Frequency Adjustment (Cont.)		*c. At rear of receiver case, connect INT 5 MHZ OUT jack A1J24 to ANT 50 OHMS jack using BNC-to-N adapter UG-201/U and 50 ohm coaxial cable. d. Connect input of electronic counter to PHONE USB jack A2A14J2. e. Rotate BFO control A2A14R6 fully counterclockwise and note frequency on electronic counter. If no reading is obtained, increase PHONE USB VOL and USB LINE LEVEL controls A2A14R5 and A2A14R2 until a stable reading is obtained. f. Rotate BFO control A2A14R6 fully clockwise and note frequency on electronic counter. g. Adjust BFO ADJ inductor A2A1A3L1 on top of Mode Selector Assembly A2A1, so that electronic counter reads at least 3 kHz when BFO control A2A14R6 is at extreme clockwise and counterclockwise positions. h. Observe that frequency passes through zero beat as BFO control is slowly rotrated from fully counterclockwise to fully clockwise.	3.0 to 3.5 kHz at extreme clockwise and counter-clockwise positions

* Omit if performing complete alinement

Table 6-1. Radio Receiver R-1051H/URR, Overall Adjustment and Alinement Procedures (Cont.)

STEP	TEST EQUIPMENT	PROCEDURES	ADJUSTMENT VALUE
5. BFO Frequency Adjustment (Cont.)		i. Remove cable between jacks A1J23 and A1J24 at rear of receiver. Disconnect frequency counter. Remove connector input to PHONE USB jack. j. Set 5 MHZ OSC SOURCE switch A2A5A1S1 to EXT NORMAL. *k. Return MODE SELECTOR Switch A2A14S2 to STDBY.	
6. 20 and 30 MHz Filter Adjustment	Rf Signal Generator 28480-8660C- with 86601A and 86632B Plug-ins AC Voltmeter 28480-400E Resistor, 620 ohm (2)	a. Connect rf signal generator to ANT 50 OHMS jack A1J23 at rear of receiver. b. Disconnect cables from connectors A1A1J5 and -J6 at rear of receiver case. c. Tilt chassis 90 degrees to expose bottom.	
		WARNING Dangerous voltages are present in underside of chassis when interlock is defeated. Exercise all necessary precautions to avoid electrical shock.	
		d. Connect ac voltmeter and 620 ohm resistor between pins A and B of A1 A1J5. Connect 620 ohm resistor between pins A and B of A1A1J6. e. Remove two screws and cover from 20 and 30 MHz Filter Assembly A2A10.	
		* Omit if performing complete alinement	

Table 6-1. Radio Receiver R-1051H/URR, Overall Adjustment and Alinement Procedures (Cont.)

STEP	TEST EQUIPMENT	PROCEDURES	ADJUSTMENT VALUE
6. 20 and 30 MHz Filter Adjustment (Cont.)		f. Set MODE SELECTOR Switch A2A14S2 to USB and MGC/AGC switch A2A14S3 to OFF. Set frequency control to 27.1000 MHz.	
		g. Set output level of rf signal generator to 1.0 Vrms, and set the frequency at 19.6010 MHz. (Adjust the USB LINE LEVEL control A2A14R2 for an on-scale reading of AUDIO LEVEL meter and maintain throughout test.) AUDIO LEVEL Switch A2A14A12S1 is set at USB, +0 dBm.	
20 MHz Filter Adjustment (LO-Band IF Rejection)		h. Adjust A2A10L4 for minimum dip indication on the ac voltmeter.	Minimum of dip
		i. Set the receiver frequency controls to 27.9000 MHz.	
		j. Set the signal generator frequency at 20.4010 MHz.	
		k. Adjust A2A10L2 for minimum dip indication on the ac voltmeter.	Minimum of dip
		l. Set the receiver frequency controls to 26.1000 MHz.	
		m. Set the signal generator frequency at 29.6010 MHz.	
30 MHz Filter Adjustment (Hi-Band IF Rejection)		n. Adjust A2A10L5 for a minimum dip indication on ac voltmeter.	Minimum of dip
		o. Set the receiver frequency controls to 26.9000 MHz.	
		p. Set the signal generator frequency at 30.4010 MHz.	

Table 6-1. Radio Receiver R-1051H/URR, Overall Adjustment and Alinement Procedures (Cont.)

STEP	TEST EQUIPMENT	PROCEDURES	ADJUSTMENT VALUE
6. 30 MHz Filter Adjustment (Hi-Band IF Rejection (Cont.)		q. Adjust A2A10L3 for a minimum dip indication on ac voltmeter. r. Set MODE SELECTOR Switch A2A14S2 to OFF. s. Reinstall cover on 20 and 30 MHz Filter Assembly A2A10. *t. Disconnect all test equipment and return chassis to horizontal position. *u. Reconnect cables to A1A1J5 and -J6.	Minimum of dip
7. AGC and IF Gain Loop Adjustment	Rf Signal Generator 28480-8660C with 86601A and 86632B Plug-ins Digital Multimeter 89536-8800A/AA Rf Millivoltmeter 04901-92B-S5 Resistor, 620 ohms	*a. Connect rf signal generator to ANT jack A1J23 at rear of receiver. *b. Disconnect cables from connectors A1A1J5 and J6 at rear of receiver case. c. Set MODE SELECTOR Switch A2A14S2 to USB, MGC/AGC switch A2A14S3 to OFF, and GAIN control A2A14R3 fully clockwise d. Adjust potentiometers on IF/Audio Amplifier Assembly A2A2 as follows: A2A2A1R25 (IF AGC) - fully counterclockwise A2A2A1R6 (rf AGC) - fully clockwise A2A2A2R22 (IF gain) - fully clockwise	

* Omit if performing complete alinement

Table 6-1. Radio Receiver R-1051H/URR, Overall Adjustment and Alinement Procedures (Cont.)

STEP	TEST EQUIPMENT	PROCEDURES	ADJUSTMENT VALUE
7. AGC and IF Gain Loop Adjustment (Cont.)		e. Set Hz switch A2A14A11S1 to 000 and frequency controls to 2.000 MHz. Set A2A14A12S1 (AUDIO LEVEL) to USB +10.	
		NOTE Steps f. through m. are for the purpose of determining the lowest gain frequency of the receiver. If this frequency is already known, set frequency controls to it and proceed to step m.	
		f. Set rf signal generator for a 2.001 MHz, 0.5 uV, continuous wave output.	
		g. Lock rf signal generator at 1 kHz above the receiver dial frequency.	
		h. Adjust USB LINE LEVEL control A2A14R2 for -5 on AUDIO LEVEL meter (+10 -5 = +5 dBm actual level).	-5 dBm
		i. Advance the MHz controls through each increment from 3.000 to 29.000 MHz and lock rf signal generator at 1 kHz above the receiver dial frequency at each position, then verify rf signal generator is set for 0.5 uV. Note that frequency at which lowest audio output is obtained and return MHz controls to that frequency.	Note: Do not adjust A2A14R2 during steps i, j, or k.

Table 6-1. Radio Receiver R-1051H/URR, Overall Adjustment and Alinement Procedures (Cont.)

STEP	TEST EQUIPMENT	PROCEDURES	ADJUSTMENT VALUE
7. AGC and IF Gain Loop Adjustment (Cont.)		j. Advance 100 kHz control through all positions. Lock rf signal generator at 1 kHz above the receiver dial frequency at each position, verifying that rf signal generator output is 0.5 uV. Return 100 kHz control to that frequency producing lowest output.	
		k. Advance 10 kHz dial through all positions. Lock rf signal generator at 1 kHz above receiver dial frequency at each position, verifying that rf signal generator output is 0.5 uV. Return 10 kHz control to that frequency producing lowest output and reset rf signal generator output for 0.5 uV.	
		l. With frequency controls set for lowest output as determined above, verify that signal generator is set for 0.5 uV rms output and lock at 1 kHz above receiver dial frequency.	
		m. Set MGC/AGC switch A2A14S3 at SLOW.	
		n. Adjust USB LINE LEVEL control A2A14R2 for -5 on AUDIO LEVEL meter (+10 -5 = +5 dBm actual level).	-5 dBm
		o. Set signal generator output for 0.5 uV. Connect digital multimeter 89536-8800A/AA dc lead to test point A2A2A1-TP1 and common lead to ground. Set scale on meter for 1 V.	

Table 6-1. Radio Receiver R-1051H/URR, Overall Adjustment and Alinement Procedures (Cont.)

STEP	TEST EQUIPMENT	PROCEDURES	ADJUSTMENT VALUE
7. AGC and IF Gain Loop Adjustment (Cont.)		p. Rotate potentiometer A2A2A1R25 clockwise for stable 0.2 V on the 89536-8800A/AA.	+0.18 to +0.22 V
		q. Increase rf signal generator output to 0.05 V.	
		r. Connect probe of rf millivoltmeter 04901-92B-S5 to test point A2A6A8TP8. Set scale to 100 mV. Adjust potentiometer A2A2A1R6 counterclockwise for 26 mVrms on rf millivoltmeter.	26 mVrms
		s. Reduce rf signal generator output to 500 uV.	
		t. Set A2A14A12S1 (AUDIO LEVEL) to +20 dbm and set USB LINE LEVEL control A2A14R2 fully clockwise.	
		u. Adjust potentiometer A2A2A2R22 counterclockwise for 1.5 ±0.5 dBm on the AUDIO LEVEL meter. (AUDIO LEVEL switch in +20 dBm position and meter reading of 1.5 ±0.5 = 21.5 ±0.5 dbm).	1.5 ±0.5 dBm
		v. Adjust potentiometers on (LSB) IF/Audio Amplifier Assembly A2A3 as follows: A2A3A1R25 (IF AGC) - fully counterclockwise A2A3A1R6 (rf AGC) - fully clockwise A2A3A2R22 (IF gain) - fully clockwise.	

Table 6-1. Radio Receiver R-1051H/URR, Overall Adjustment and Alinement Procedures (Cont.)

STEP	TEST EQUIPMENT	PROCEDURES	ADJUSTMENT VALUE
7. AGC and IF Gain Loop Adjustment (Cont.)		w. Set MODE SELECTOR Switch A2A14S2 to LSB, MGC/AGC switch A2A14S3 to OFF, AUDIO LEVEL switch A2A14A12S1 to LSB +10 and GAIN control A2A14R3 fully clockwise.	
		NOTE Procedure for the LSB Module A2A3 is the same as above steps e. through w., except that the signal generator is locked 1 kHz below the receiver dial frequency and audio level switch is on LSB ranges.	
		*x. Disconnect test equipment and reconnect cables to A1A1J5 and J6.	
8. Rf Gain Adjustment	Rf Signal Generator 28480-8660C with 86601A and 86632B Plug-ins AC Voltmeter 28480-400E Digital Multimeter 89536-8800A/AA Resistor, 620 ohm	a. Set the receiver controls as follows: MODE SELECTOR Switch A2A14S2 to USB, AUDIO LEVEL switch A2A14A12S1 to OFF, MGC/AGC switch A2A14S3 to OFF and frequency controls to to 2.100 MHz. *b. Connect rf signal generator to ANT 50 OHMS jack A1J23 on rear of receiver. c. Set the rf signal generator for continuous wave and adjust its output level to 0.7 uV. Tilt the receiver chassis vertically 90 degrees to expose the underside.	

* Omit if performing complete alinement

Table 6-1. Radio Receiver R-1051H/URR, Overall Adjustment and Alinement Procedures (Cont.)

STEP	TEST EQUIPMENT	PROCEDURES	ADJUSTMENT VALUE
8. Rf Gain Adjustment (Cont.)		*d. Connect a 620 ohm resistor and the digital multimeter between pins A and B of USB AUDIO OUT jack A1A1J5.	
		e. Tune the rf signal generator for a peak audio output on the ac voltmeter.	
		f. Adjust the USB LINE LEVEL control A2A14R2 for a zero dB indication on the 3-volt scale of the ac voltmeter.	
		g. Rotate the GAIN control A2A14R3 to the fully counter-clockwise position.	
		h. Increase the rf signal generator output level by 130 dBm and then adjust potentiometer A2A13R5 for a zero dBm indication on the ac voltmeter.	0 dBm
		i. Disconnect all test equipment; return chassis to horizontal position.	
9. Return to Normal Operation		a. Ensure that all test equipment is disconnected.	
		b. Reconnect cables to appropriate connectors on rear of case.	
		c. Slide receiver chassis back into case and secure it by tightening front panel screws.	
		d. Set MODE SELECTOR Switch A2A14S2 to STDBY or desired operating mode.	

* Omit if performing complete alinement

Table 6-1. Radio Receiver R-1051H/URR, Overall Adjustment and Alinement Procedures (Cont.)

STEP	TEST EQUIPMENT	PROCEDURES	ADJUSTMENT VALUE
9. Return to Normal Operation (Cont.)		e. Position switch on frequency standard for system operation.	

Table 6-2. Mode Selector Assembly A2A1, Adjustment and Alinement Procedures

STEP	TEST EQUIPMENT	PROCEDURES	ADJUSTMENT VALUE
1. BFO Frequency Adjustment	Amplifier/Mode Selector Test Fixture TS-3670/WRC-1 Electronic Counter 28480-5328A-H99	a. Remove cover from Mode selector Assembly A2A1 and connect test equipment as shown in figure 6-2.	
		b. On test fixture set controls to test receiver Mode Selector Assembly in CW receiving mode.	
		c. On test fixture set BFO controls for lowest pitch and low range.	
		d. Adjust A2A1A3L1 on Mode Selector Assembly A2A1 for an indication of 497 kHz +0 Hz -50 Hz on electronic counter.	496.95 kHz to 497.00 kHz
		e. On test fixture set BFO controls for highest pitch and high range. If indicated frequency is not greater than or equal to 503.0 Hz, adjust A2A1A3L1 to bring indication within limit.	503.0 Hz
		f. On test fixture set BFO controls for lowest pitch and low range. Indicated frequency should be less than or equal to 497.0 kHz.	497.0 kHz
2. BFO Level Adjustment	Amplifier/Mode Selector Test Fixture TS-3670/WRC-1 Electronic Counter 28480-5328A-H99 Rf Millivoltmeter 04901-92-S5	a. Operate BFO controls to obtain an indication of 500 kHz on frequency counter.	500 kHz
		b. Set rf millivoltmeter to measure 1 Vrms full scale.	1 Vrms
		c. Tune A2A1A3T1 for peak indication on millivoltmeter.	250 mVrms

Table 6-2. Mode Selector Assembly A2A1, Adjustment and Alinement Procedures

STEP	TEST EQUIPMENT	PROCEDURES	ADJUSTMENT VALUE
2. BFO Frequency Adjustment (Cont.)		d. Reinstall cover on Mode Selector Assembly A2A1 and remove assembly from Test Fixture.	

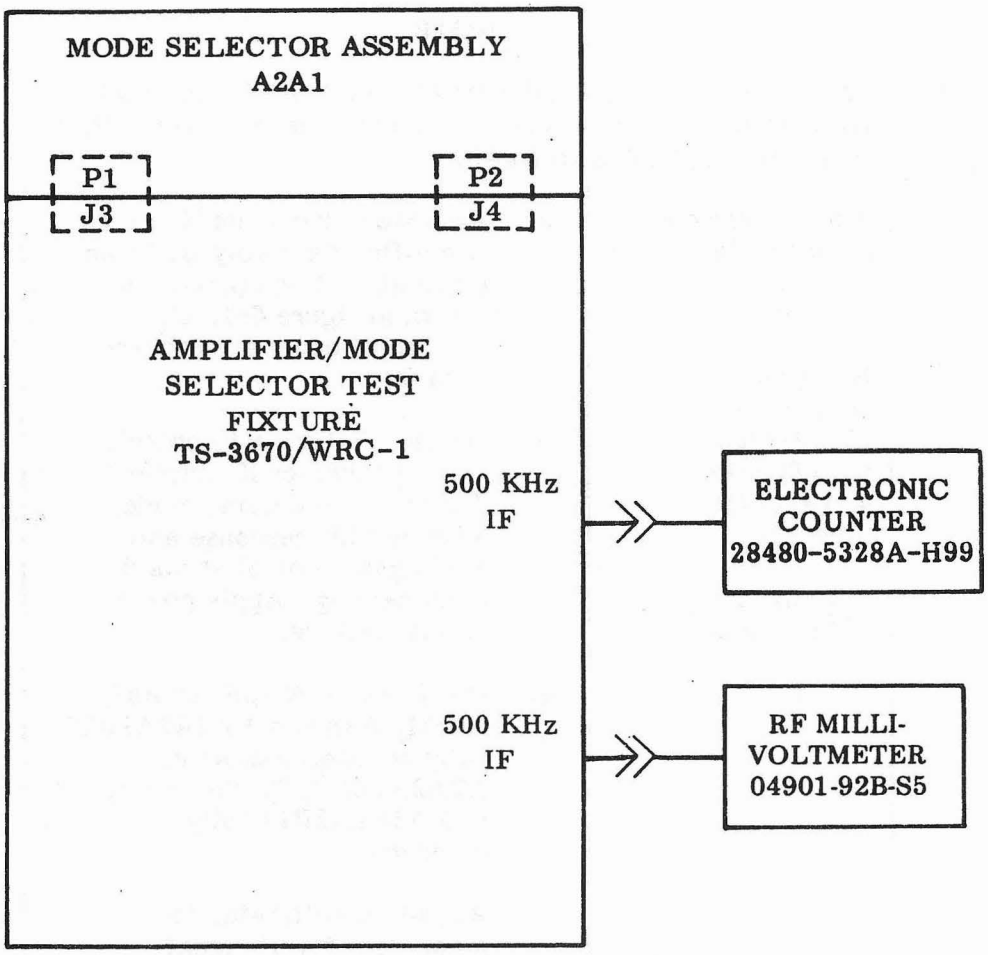

Figure 6-2. Mode Selector Assembly A2A1, Adjustment and Alinement Bench Test Setup

Table 6-3. IF/Audio Amplifier Assemblies A2A2/A2A3, Adjustment and Alinement Procedures

STEP	TEST EQUIPMENT	PROCEDURES	ADJUSTMENT VALUE
		NOTE The circuitry of assemblies A2A2 and A2A3 is identical. All reference designations in this table which begin with A2A2 are applicable to A2A3.	
1. IF Alinement	Amplifier/Mode Selector Test Fixture TS-3670/WRC-1 Rf Signal Generator 28480-8660C with 86601A and 86632B Plug-ins AC Voltmeter 28480-400E	a. Remove cover from IF/Audio Amplifier Assembly A2A2 and connect test equipment as shown in figure 6-3. Be sure connectors are properly mated. b. On test fixture set controls to test receiver IF amplifier in CW receiving mode, with no FSK response and audio gain control at maximum setting. Apply power to test fixture. c. On IF/Audio Amplifier Assembly A2A2, set A2A2A1R25 fully counterclockwise, A2A2A1R6 fully clockwise, and A2A2A2R22 fully clockwise. d. Adjust ac voltmeter to measure a 3 volt signal level and adjust the rf signal generator to provide an output of 500 kHz modulated 30% by 1000 Hz, with sufficient amplitude to yield a 3-volt indication on the ac voltmeter.	3 volts
		NOTE Start the following step with the rf signal generator output set at 30 mV. Decrease rf signal generator output if necessary to maintain 3-volt indication on ac voltmeter.	

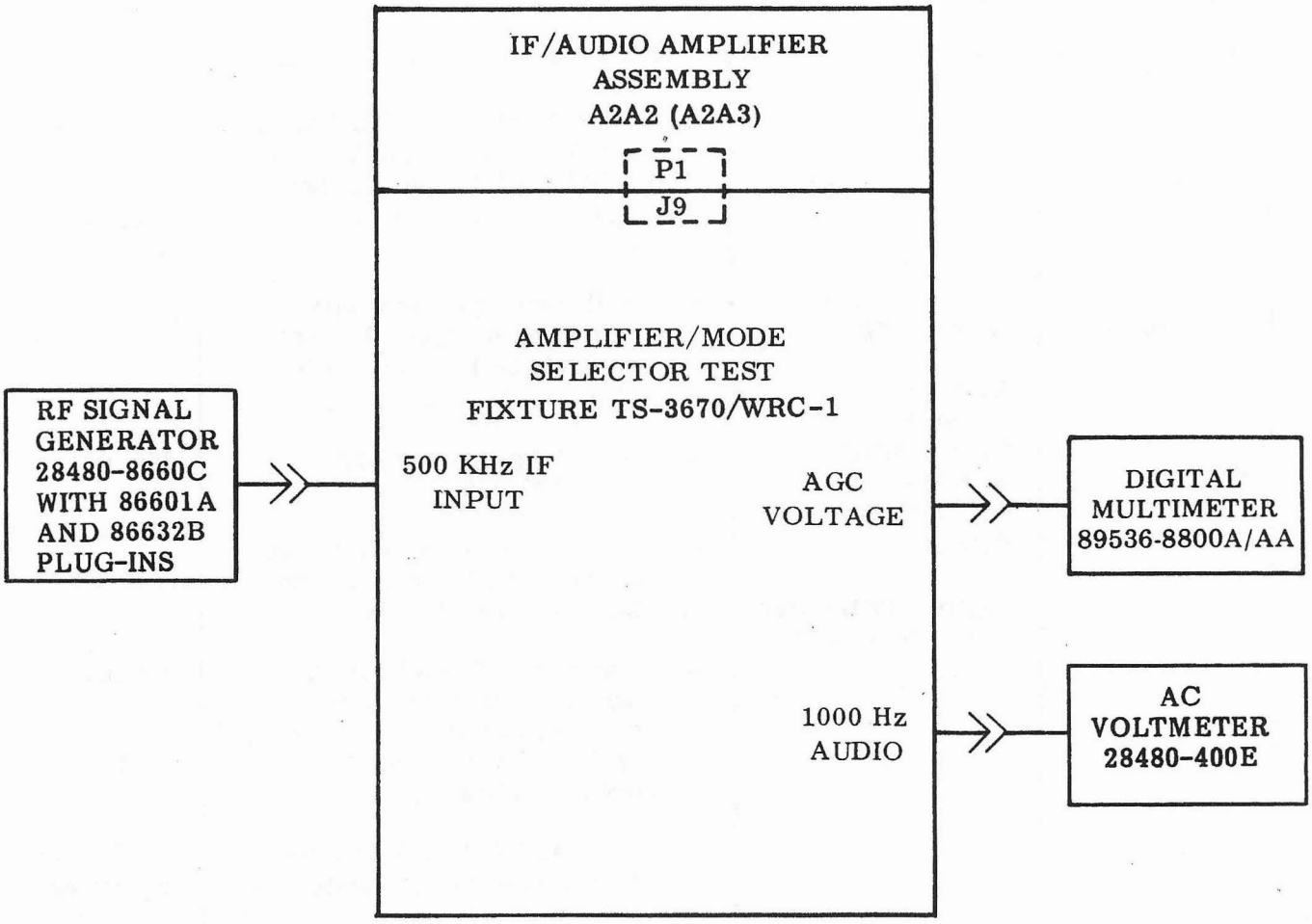

Figure 6-3. IF/Audio Amplifier Assemblies A2A2/A2A3, Adjustment and Alinement Bench Test Setup

Table 6-3. IF/Audio Amplifier Assemblies A2A2/A2A3, Adjustment and Alinement Procedures (Cont.)

STEP	TEST EQUIPMENT	PROCEDURES	ADJUSTMENT VALUE
1. IF Alinement (Cont.)		e. Tune A2A2A2T1, A2A2A2T2, A2A2A2T3, A2A2A2T4 and A2A2A3L1 for peak indication on ac voltmeter.	3 volts with rf signal generator output level of 30 mV or less.
2. AGC Alinement	AC Voltmeter 28480-400E Rf Signal Generator 28480-8660C with 86601A and 86632B Plug-ins Digital Multimeter 89536-8800A/AA	a. With test equipment connected as in figure 6-3, set controls on test fixture for fast FSK response.	
		b. Adjust signal generator output to 300 uV.	300 uV.
		c. Using an external 1:1 probe, connect digital multimeter input to A2A2A1TP1.	
		d. Adjust A2A2A1R25 or the signal generator output, or both, to obtain an indication of 250 mV on digital multimeter.	250 mV.
		e. Tune A2A2A1T1 for maximum indication on digital multimeter.	Maximum indication.
	NOTE Adjust A2A2A1R25 and/or input signal level from rf signal generator as required to maintain indication of 250 mV on digital multimeter.		
		f. Tune A2A2A1T2 for maximum indication on digital multimeter.	Maximum indication.
3. AGC Adjustment	Rf Signal Generator 28480-8660C with 86601A and 86632B Plug-ins	a. In test equipment setup of figure 6-3, connect multimeter to test point A1TP1 on assembly A2A2. Adjust signal generator output for 1000 uV CW @ 500 kHz.	

Table 6-3. IF/Audio Amplifier Assemblies A2A2/A2A3, Adjustment and Alinement Procedures (Cont.)

STEP	TEST EQUIPMENT	PROCEDURES	ADJUSTMENT VALUE
3. AGC Adjustment (Cont.)	Digital Multimeter 89536-8800A/AA	b. Adjust A2A2A1R25 clockwise for 0.9 V indication on multimeter.	+0.85 to +0.95 V
4. Rf AGC Adjustment	Rf Signal Generator 28480-8660C with 86601A and 86632B Plug-ins	a. Disconnect digital multimeter probe from A2A2A1TP1. Position digital multimeter controls to measure -10 V and connect multimeter to A2A2A1TP2.	
	Digital Multimeter 89536-8800A/AA	b. Set rf signal generator for output of 500 kHz modulated 30% by 1000 Hz at 1 mV level.	
		c. Adjust A2A2A1R6 counterclockwise for -8 V indication on digital multimeter.	-7 to -9 V
5. IF Gain Adjustment	Rf Signal Generator 28480-8660C with 86601A and 86632B Plug-ins AC Voltmeter 28480-400E	a. With test equipment connected as shown in figure 6-3 and output of rf signal generator set as in step 4.b. above, set controls on ac voltmeter to measure 8 volts. Set controls on test fixture to monitor audio output.	
		b. Adjust A2A2A2R22 counterclockwise to obtain audio output level of 7.5 Vac as indicated on ac voltmeter.	6.5 to 8.5 Vac
		c. Remove IF/Audio Amplifier Assembly A2A2/A2A3 from Test Fixture and reinstall cover on assembly.	

Table 6-4. RF Amplifier Assembly A2A4, Adjustment and Alinement Procedures *

STEP	TEST EQUIPMENT	PROCEDURES	ADJUSTMENT VALUE
1. A2A4A2T4 Adjustment	Rf Amplifier Test Fixture TS-3685/WRC-1 Rf Signal Generator 28480-8660C with 86601A and 86632B Plug-ins Rf Millivoltmeter 04901-92B-S5 with Probe 04901-91-12F	a. Remove cover from RF Amplifier Assembly A2A4. b. Rotate 100 kHz and 10 kHz couplers on rf amplifier assembly so that they will mate with couplers on Rf Amplifier Test Fixture. c. Mount RF Amplifier Assembly A2A4 on Rf Amplifier Test Fixture, making certain that connectors and couplers mate correctly. d. Connect test equipment as shown in figure 6-4. e. Apply operating power to test fixture. f. Set test fixture controls to test in receiving mode and AGC for maximum output. g. Set rf signal generator for 2.0050 MHz and adjust output level to approximately 10 mVrms. h. Set test fixture frequency control to apply 2.000 MHz.	10 mVrms
		NOTE In the following procedures, reduce rf signal generator output as required to keep rf millivoltmeter indication on scale.	
		i. Adjust A2A4A2T4 (top coil on strip A2) for maximum indication on rf millivoltmeter.	Maximum output

* Since these are depot adjustment/alinement procedures, both receiver and transmitter applications are addressed in this table.

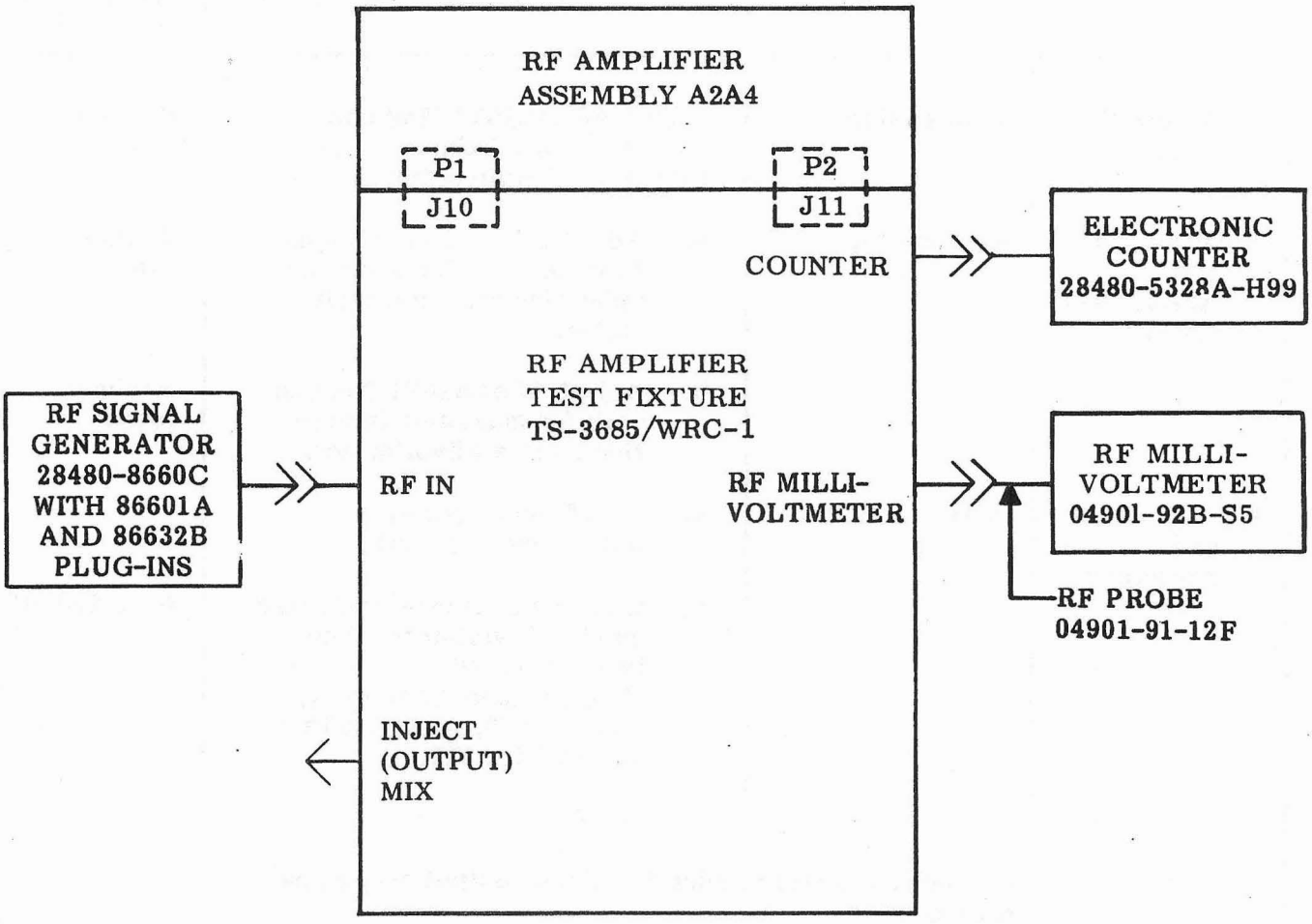

Figure 6-4. Rf Amplifier Assembly A2A4, Adjustment and Alinement Bench Test Setup

Table 6-4. RF Amplifier Assembly A2A4, Adjustment and Alinement Procedures (Cont.)

STEP	TEST EQUIPMENT	PROCEDURES	ADJUSTMENT VALUE
2. A2A4A25T3 Adjustment	Same as step 1	Adjust A2A4A25T3 (2nd coil from top) for maximum indication on rf millivoltmeter.	Maximum output
3. A2A4A20T2 and A2A4A20T1 Adjustment	Same as step 1	a. Adjust A2A4A20T2 (2nd coil from bottom) for maximum indication on rf millivoltmeter.	Maximum output
		b. Adjust A2A4A20T1 (bottom coil) for maximum indication on rf millivoltmeter.	Maximum output
4. Gain Check and Adjustment	Same as step 1	a. Set rf signal generator output level to 1 mV.	
		b. Output signal level indicated on rf millivoltmeter should be between 40 and 250 mV; if not, retune A2A4A2T4, A2A4A25T3, A2A4A20T2 and A2A4A20T1.	40 to 250 mV
		NOTE Excessive repeated tuning for a peak output may cause regeneration.	
5. Gain Variation Check and Adjustment	Same as step 1	a. Set signal generator ıtput and test fixture freq..ency control for 2.000 MHz. Note dBm indication on rf millivoltmeter. Increase signal generator output and test fixture frequency controls in 100 kHz steps to 2.90 MHz. Note dBm indication on rf millivoltmeter at each step.	

Table 6-4. RF Amplifier Assembly A2A4, Adjustment and Alinement Procedures (Cont.)

STEP	TEST EQUIPMENT	PROCEDURES	ADJUSTMENT VALUE
5. Gain Variation check and Adjustment (Cont.)		b. If the gain variation between the highest and lowest indications obtained in step a. is greater than 6 dB, touch up the adjustments of the transformers adjusted in steps 1 through 4 above, to reduce the gain variation to less than 6 dB.	Less than 6 dB gain variation over the band
6. A2A4A3 through A2A4A29 Adjustment	Same as step 1	Set rf signal generator for approximately 10 mV output at each of the frequencies listed below and set test fixture frequency control to 5 kHz less. Set control on test fixture to monitor rf input frequency. At each test frequency adjust the coils in the indicated sequence to obtain output signal level of 40 - 250 mV. At each test frequency perform the gain and gain variation check and adjustment procedures of steps 4 and 5.	10 mV (approximate)
		3.005 MHz A2A4A3T4 (top coil) A2A4A26T3 (2nd coil from top) A2A4A21T2 (3rd coil from top) A2A4A21T1 (bottom coil)	Maximum output at 3.005 MHz 40 to 250 mV
		4.005 MHz A2A4A4T4 A2A4A27T3 A2A4A22T2 A2A4A22T1	Output at 4.005 MHz 40 to 250 mV
		5.005 MHz A2A4A5T4 A2A4A28T3 A2A4A23T2 A2A4A23T1	Output at 5.005 MHz 40 to 250 mV

Table 6-4. RF Amplifier Assembly A2A4, Adjustment and Alinement Procedures (Cont.)

STEP	TEST EQUIPMENT	PROCEDURES	ADJUSTMENT VALUE
6. A2A4A3 through A2A4A29 Adjustment (Cont.)		6.005 MHz A2A4A6T4 A2A4A29T3 A2A4A24T2 A2A4A24T1	Output at 6.005 MHz 40 to 250 mV
		7.005 MHz A2A4A7T4 A2A4A2T3 A2A4A25T2 A2A4A25T1	Output at 7.005 MHz 40 to 250 mV
		8.005 MHz A2A4A8T4 A2A4A3T3 A2A4A26T2 A2A4A26T1	Output at 8.005 MHz 40 to 250 mV
		9.005 MHz A2A4A9T4 A2A4A4T3 A2A4A27T2 A2A4A27T1	Output at 9.005 MHz 40 to 250 mV
		10.005 MHz A2A4A10T4 A2A4A5T3 A2A4A28T2 A2A4A28T1	Output at 10.005 MHz 40 to 250 mV
		11.005 MHz A2A4A11T4 A2A4A6T3 A2A4A29T2 A2A4A29T1	Output at 11.005 MHz 40 to 250 mV
		12.005 MHz A2A4A12T4 A2A4A7T3 A2A4A2T2 A2A4A2T1	Output at 12.005 MHz 40 to 250 mV
		13.005 MHz A2A4A13T4 A2A4A8T3 A2A4A3T2 A2A4A3T1	Output at 13.005 MHz 40 to 250 mV
		14.005 MHz A2A4A14T4 A2A4A9T3 A2A4A4T2 A2A4A4T1	Output at 14.005 MHz 40 to 250 mV

Table 6-4. RF Amplifier Assembly A2A4, Adjustment and Alinement Procedures (Cont.)

STEP	TEST EQUIPMENT	PROCEDURES	ADJUSTMENT VALUE
6. A2A4A3 through A2A4A29 Adjustment (Cont.)		15.005 MHz A2A4A15T4 A2A4A10T3 A2A4A5T2 A2A4A5T1	Output at 15.005 MHz 40 to 250 mV
		16.005 MHz A2A4A16T4 A2A4A11T3 A2A4A6T2 A2A4A6T1	Output at 16.005 MHz 40 to 250 mV
		17.005 MHz A2A4A17T4 A2A4A12T3 A2A4A7T2 A2A5A7T1	Output at 17.005 MHz 40 to 250 mV
		18.005 MHz A2A4A18T4 A2A4A13T3 A2A4A8T2 A2A4A8T1	Output at 18.005 MHz 40 to 250 mV
		19.005 MHz A2A4A19T4 A2A4A14T3 A2A4A9T2 A2A4A9T1	Output at 19.005 MHz 40 to 250 mV
		20.005 MHz A2A4A20T4 A2A4A15T3 A2A4A10T2 A2A4A10T1	Output at 20.005 MHz 40 to 250 mV
		21.005 MHz A2A4A21T4 A2A4A16T3 A2A4A11T2 A2A4A11T1	Output at 21.005 MHz 40 to 250 mV
		NOTE Before tuning the 22 MHz band, adjust the cores of associated transformers fully clockwise. Set the test fixture rf controls to 22.0 MHz and the rf signal generator to 20.000 MHz. Locate A2A4A12T5 (between A2A4A12T1 and A2A4A12T2) and adjust trap for minimum output. It may be necessary to increase the rf signal generator output during this adjustment. After adjusting A2A4A12T5, set the rf signal generator to 22.005 MHz and proceed with normal tuning of transformers.	

Table 6-4. RF Amplifier Assembly A2A4, Adjustment and Alinement Procedures (Cont.)

STEP	TEST EQUIPMENT	PROCEDURES	ADJUSTMENT VALUE
6. A2A4A3 through A2A4A29 Adjustment (Cont.)		22.005 MHz A2A4A22T4 A2A4A17T3 A2A4A12T2 A2A4A12T1	Output at 22.005 MHz 40 to 250 mV
		NOTE Before tuning the 23 MHz band, adjust the cores of associated transformers fully clockwise. Set the test fixture rf controls to 23.00 MHz and the rf signal generator to 19.205 MHz. Locate A2A4A13T5 (between A2A4A13T1 and A2A4A13T2) and adjust trap for minimum output. It may be necessary to increase the rf signal generator output during this adjustment. After adjusting A2A4A13T5, set the rf signal generator to 23.005 MHz and proceed with normal tuning of transformers.	
		23.005 MHz A2A4A23T4 A2A4A18T3 A2A4A13T2 A2A4A13T1	Output at 23.005 MHz 40 to 250 mV
		24.005 MHz A2A4A24T4 A2A4A19T3 A2A4A14T2 A2A4A14T1	Output at 24.005 MHz 40 to 250 mV
		25.005 MHz A2A4A25T4 A2A4A20T3 A2A4A15T2 A2A4A15T1	Output at 25.005 MHz 40 to 250 mV
		26.005 MHz A2A4A26T4 A2A4A21T3 A2A4A16T2 A2A4A16T1	Output at 26.005 MHz 40 to 250 mV
		27.005 MHz A2A4A27T4 A2A4A22T3 A2A4A17T2 A2A4A17T1	Output at 27.005 MHz 40 to 250 mV
		28.005 MHz A2A4A28T4 A2A4A23T3 A2A4A18T2 A2A4A18T1	Output at 28.005 MHz 40 to 250 mV

Table 6-4. RF Amplifier Assembly A2A4, Adjustment and Alinement Procedures (Cont.)

STEP	TEST EQUIPMENT	PROCEDURES	ADJUSTMENT VALUE
6. A2A4A3 through A2A4A29 Adjustment (Cont.)		29.005 MHz A2A4A29T4 A2A4A24T3 A2A4A19T2 A2A4A19T1	Output at 29.005 MHz 40 to 250 mV
7. Band-to Band Gain Variation	Same as step 1	a. Set signal generator output and test frequency to 2.55 MHz. Record dBm indication. Repeat at 3.55 MHz, 4.55 MHz, 5.55 MHz, etc., to 29.55 MHz.	
		b. If the gain variation between the highest and lowest readings obtained in step a. exceeds 15 dB, readjust the high gain band by turning T4 to reduce the band-to-band variation to less than 15 dB.	Less than 15 dB variation
8. Overall Gain Adjustment		a. Set test fixture controls for transmit mode.	
		b. Set rf amplifier test fixture rf frequency controls for 22.000 MHz.	
		c. Set signal generator for 22.005 MHz and adjust output level to obtain 3.5 mVrms at A2A4A38TP1 using the rf millivoltmeter to measure the level.	
		d. Connect rf millivoltmeter to A2A4TP3. (Ground meter probe at A2A4TP4).	
		e. Adjust A2A4A38R6.	2.5 Vrms
		f. Disconnect test equipment.	

Table 6-5. Frequency Standard Assembly A2A5, Adjustment and Alinement Procedures

STEP	TEST EQUIPMENT	PROCEDURES	ADJUSTMENT VALUE
1. Initial Test Setup	Frequency Standard Test Fixture TS-3667/WRC-1	a. Connect Frequency Standard and test equipment as shown in figure 6-5. b. Set 5 MHz OSC SOURCE switch A2A5A2S1 to INT/ COMP position. c. Apply power to test fixture and allow a 96-hour (minimum) warm-up.	
2. Frequency Check	Frequency Standard Test Fixture TS-3667/WRC-1 Electronic Counter 28480-5328A-H99	a. Set time base on counter for a 10-second gate. On test fixture set output controls to LOAD and INT 5 MHz. Counter shall indicate 4,999,999.8 Hz to 5,000,000.2 Hz. If indication is within limits, proceed to step 5, otherwise proceed to step 3.	
3. Fine Frequency Adjustment	Same as step 2	a. Adjust FINE FREQUENCY ADJUST control A2A5A1C2 with a screwdriver until an indication of 5,000,000.0 Hz is observed on electronic counter. Do not adjust A2A5A1C2 beyond end calibration marks on INDEX (1 or 30). b. If within limits, log the INDEX reading on the logging chart on the cover of the Frequency Standard Assembly and proceed to step 5. Otherwise, proceed to step 4.	5,000,000.0 Hz
4. Coarse Frequency Adjustment	Same as step 2	a. If the fine frequency adjustment does not bring the 5 MHz output of the Frequency Standard Assembly into range, the INDEX will read 1 or 30.	5,000,000.0 Hz

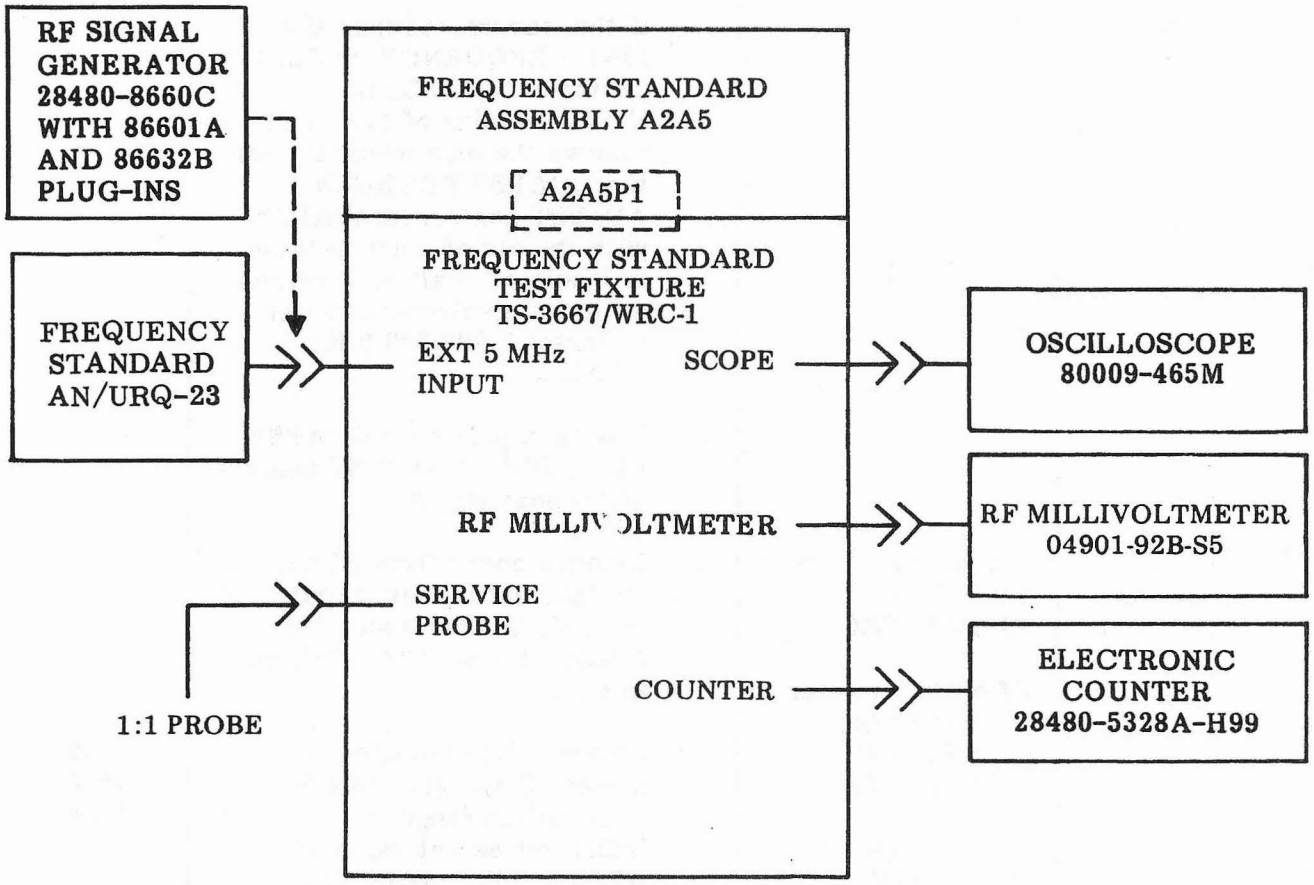

Figure 6-5. Frequency Standard Assembly A2A5, Adjustment and Alinement Bench Test Setup

Table 6-5. Frequency Standard Assembly A2A5, Adjustment and Alinement Procedures (Cont.)

STEP	TEST EQUIPMENT	PROCEDURES	ADJUSTMENT VALUE
4. Coarse Frequency Adjustment (Cont.)		If this occurs, readjust the FINE FREQUENCY ADJUST control A2A5A1C2 to an INDEX reading of 17. Then remove the plug which covers the COARSE FREQUENCY ADJUST control A2A5A1C3 with the aid of a nonmetallic or insulated shaft screwdriver until the electronic counter indicates 5,000,000.0 Hz ±0.2 Hz.	
		b. Reattach plug over COARSE FREQUENCY ADJUST control and repeat step 3.	
5. 5 MHz Amplifier Alinement	Frequency Standard Test Fixture TS-3667/WRC-1 Rf Millivoltmeter 04901-92B-S5 with Rf Probe 04901-91-12F Oscilloscope 80009-465M	a. Remove cover from A2A5. On test fixture set output controls to LOAD and INT 5 MHz. Leave A2A5A2S1 as in step 1.	
		b. Observe the rf millivoltmeter. If voltage outside of specified range is indicated, select value of A2A5A2R49 to obtain required result. See table 7-2 for selectable values.	480 mVrms to 1200 mVrms
		c. Adjust A2A5A2C38 to obtain a maximum amplitude sine wave as displayed on the oscilloscope.	maximum amplitude sine wave
6. 1 MHz Divider Alinement	Frequency Standard Test Fixture TS-3667/WRC-1 Electronic Counter 28480-5328A-H99	a. On test fixture, set controls to read 1 MHz output and load output. Leave A2A5A2S1 as in step 1.	1 MHz
		b. Adjust A2A5A2C7 to obtain an indication of 1,000,000.0 Hz on electronic counter.	1,000,000.0 Hz

Table 6-5. Frequency Standard Assembly A2A5, Adjustment and Alinement Procedures (Cont.)

STEP	TEST EQUIPMENT	PROCEDURES	ADJUSTMENT VALUE
6. 1 MHz Divider Alinement (Cont.)	Rf Millivoltmeter 04901-92B-S5 with Rf probe 04901-91-12F Oscilloscope 80009-465M	c. Observe rf millivoltmeter. 1 MHz output should be as specified. If output outside of specified range is indicated, select values of A2A5A2R17 and A2A5A2R18 to bring voltage into range. See table 7-2 for selectable values.	350 mVrms to 600 mVrms
		d. Adjust A2A5A2C13 to obtain a maximum amplitude sine wave as displayed on the oscilloscope.	maximum amplitude sine wave
7. 500 kHz Divider Alinement	Same as step 6	a. On test fixture set output controls to LOAD and 500 kHz (A1). Leave A2A5A2S1 as in step 1.	
		b. Adjust A2A5A2C16 to obtain an indication of 500,000.0 Hz on electronic counter.	500,000.0 Hz
		c. Observe rf millivoltmeter. 500,000.0 Hz output should be as specified. If output is outside specified range, select values of A2A5A2R30 and A2A5A2R31 to bring voltage into range. See table 7-2 for selectable values.	140 mVrms to 210 mVrms
		d. Adjust A2A5A2C22 to obtain a maximum amplitude sine wave as displayed on the oscilloscope.	Maximum amplitude sine wave
8. 10 MHz Multiplier Alinement	Same as step 6	a. On test fixture, set output controls to LOAD and 10 MHz. Leave A2A5A2S1 as in step 1.	

Table 6-5. Frequency Standard Assembly A2A5, Adjustment and Alinement Procedures

STEP	TEST EQUIPMENT	PROCEDURES	ADJUSTMENT VALUE
8. 10 MHz Multiplier Alinement (Cont.)		b. Adjust A2A5A2C31 to obtain an electronic counter indication of 10,000,000 Hz.	10,000,000 Hz
		c. Observe rf millivoltmeter. Output should be as specified. If output is outside specified range, select values for A2A5A2R43 and A2A5A2R44 to bring voltage into range. See table 7-2 for selectable values.	18 mVrms to 45 mVrms
		d. Adjust A2A5A2C33 to obtain a maximum amplitude sine wave as observed on the oscilloscope.	Maximum amplitude sine wave
9. Automatic 5 MHz Source Switching Check and Adjustment	Frequency Standard Test Fixture TS-3667/WRC-1 Electronic Counter 28480-5328A-H99 Rf Millivoltmeter 04901-92B-S5 with Rf Probe 04901-91-12F Rf Signal Generator 28480-8660C with 86601A and 86632B Plug-ins	a. Set 5 MHz OSC SOURCE switch A2A5A2S1 to EXT NORMAL position.	
		b. On test fixture, set output controls to LOAD and INT 5 MHz control for minimum output.	
		c. Connect output of Rf Signal Generator to 5 MHz input connector on test fixture.	
		d. Adjust Rf Signal Generator for 1Vrms output at 5.001 MHz.	1 Vrms at 5.001 MHz
		e. Note frequency reading on electronic counter.	
		f. While observing electronic counter, SLOWLY increase 5 MHz control on test fixture until counter frequency jumps to 5.001 MHz.	5.001 MHz
		g. Read the level on the rf millivoltmeter.	300 to 500 mVrms

Table 6-5. Frequency Standard Assembly A2A5, Adjustment and Alinement Procedures (Cont.)

STEP	TEST EQUIPMENT	PROCEDURES	ADJUSTMENT VALUE
9. Automatic 5 MHz Source Switching Check and Adjustment (Cont.)		h. While observing electronic counter, SLOWLY decrease 5 MHz control on test fixture until counter frequency jumps back to frequency noted in step e.	See step e.
		i. Read the level on the rf millivoltmeter.	175 to 325 mVrms
		j. If indication in g. above is not within limits, select a value for A2A5A4R5 to bring indication within limits. See table 7-2 for selectable values. Increase A2A5A4R5 to increase sensitivity.	
		k. If indication in i. is not within limits, select a value for A2A5A4R3 to bring indication within limits. See table 7-2 for selectable values. Increase R3 to increase sensitivity.	
		NOTE There is interaction between A2A5A4R3 and A2A5A4R5. When selecting values for these resistors, select a value for A2A5A4R3 first.	
10. Final Check		a. Reattach cover to Frequency Standard Assembly A2A5.	
		b. Repeat step 2. above, except proceed to step c. below if indication is withinin limits.	
		c. Remove Frequency Standard Assembly A2A5 from test fixture.	

Table 6-6. Translator/Synthesizer Assembly A2A6, Adjustment and Alinement Procedures *

STEP	TEST EQUIPMENT	PROCEDURES	ADJUSTMENT VALUE
1. Frequency Generator Subassembly A2A6A16 Adjustment	Translator/Synthesizer Test Fixture TS-3665/WRC-1 Electronic Counter 28480-5328A-H99 Digital Multimeter 89536-8800A/AA Rf Signal Generator 28480-8660C with 86601A and 86632B Plug-ins Frequency Standard AN/URQ-23 Oscilloscope 80009-465M Spectrum Analyzer 28480-8553B-E03 A2A6A16 Extender Card 98738 - 01A228396-01	a. Remove top cover from Translator/Synthesizer Assembly A2A6 and connect test equipment as shown in figure 6-6. b. Apply power to test fixture and set controls to test 100 Hz Translator/ Synthesizer in receive mode with no vernier action. c. Connect digital multimeter to A2A6A15TP2 and observe indication of +5.1 to +5.3 V. If not within this range, select value of A2A6A15R15 in accordance with Specific Note 1 of figure 5-41. d. Connect digital multimeter to A2A6A16TP1 and observe indication. It should be 0 V.	 +5.1 to +5.3 V 0 V

* Since these are depot adjustment/alinement procedures, both receiver and transmitter applications are addressed in this table.

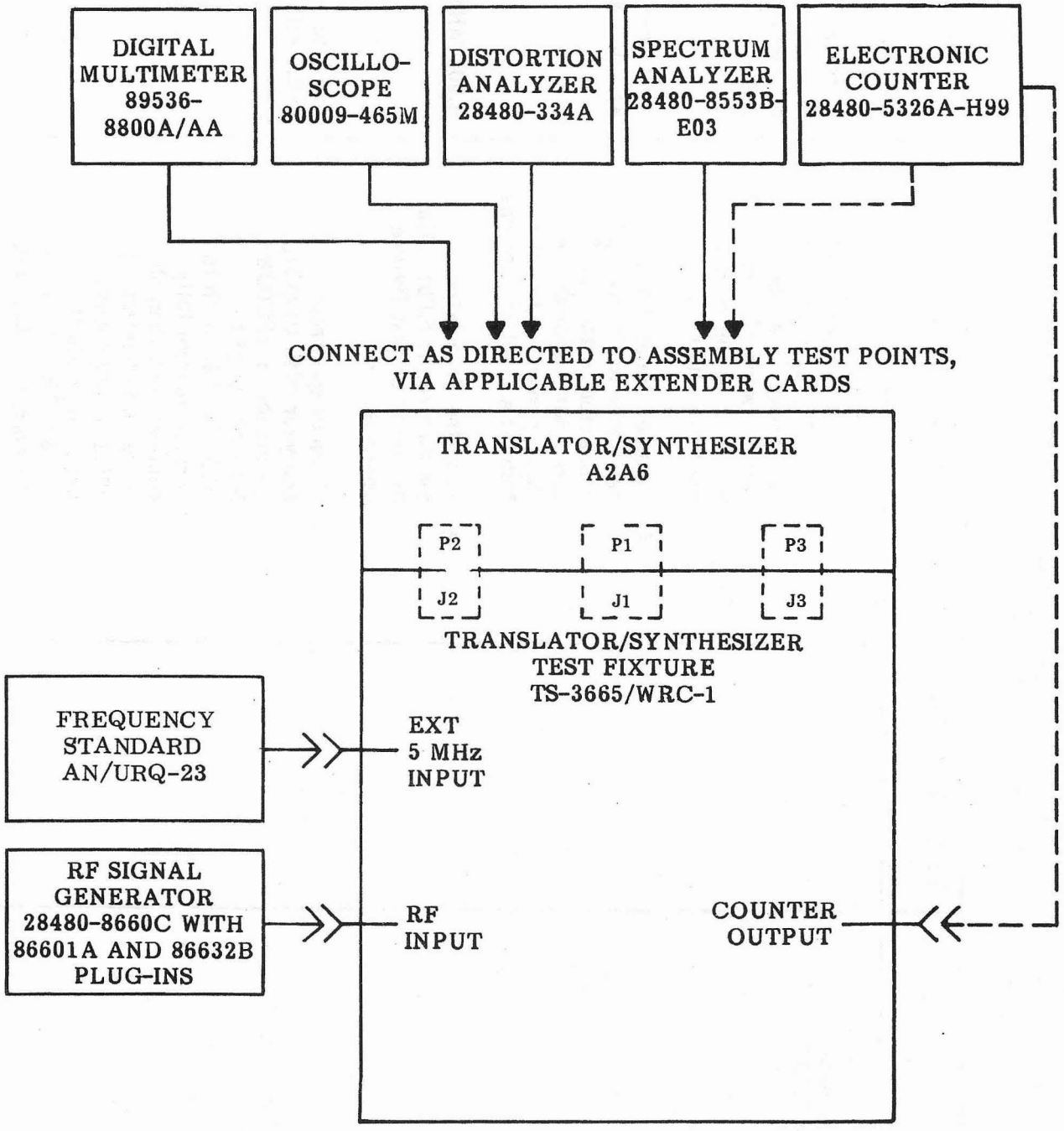

Figure 6-6. Translator/Synthesizer Assembly A2A6, Adjustment and Alinement Bench Test Setup

Table 6-6. Translator/Synthesizer Assembly A2A6, Adjustment and Alinement Procedures (Cont.)

STEP	TEST EQUIPMENT	PROCEDURES	ADJUSTMENT VALUE
1. Frequency Generator Subassembly A2A6A16 Adjustment (Cont.)		e. Activate vernier and observe digital multimeter indication. It should vary between +2.5 and +3.7 V as the vernier is operated from limit to limit.	Varying voltages between +2.5 and +3.7 V
		f. Connect the rf signal generator to the Rf input connector on the test fixture. Set output of the rf signal generator to 5.000 MHz at a level of 5 mVrms	5 mVrms at 5.000 MHz
		g. Tune the Translator/ Synthesizer to 5.001 MHz by means of test fixture controls.	5.001 MHz
		h. Connect spectrum analyzer with tracking generator in RESTORE SIGNAL mode to A2A6A8TP8. With the vernier control fully counterclockwise, observe an indication of 499.2 to 499.4 kHz. If necessary, adjust A2A6A16R22 to obtain the correct indication.	499.2 to 499.4 kHz

Table 6-6. Translator/Synthesizer Assembly A2A6, Adjustment and Alinement Procedures (Cont.)

STEP	TEST EQUIPMENT	PROCEDURES	ADJUSTMENT VALUE
1. Frequency Generator Subassembly A2A6A16 Adjustment (Cont.)		i. With the equipment connected as in Step h. and with the vernier control fully clockwise, observe an indication of 497.6 to 497.8 kHz on the counter. If necessary, adjust A2A6A16R18 to obtain the correct indication.	497.6 to 497.8 kHz
		j. Repeat steps h. and i. Adjust if necessary to obtain the required indications.	
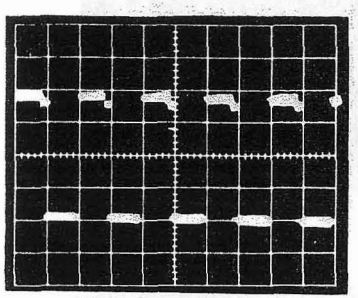 WAVEFORM A		k. Connect the oscilloscope to A2A6A16TP2. Disable vernier. Observe Waveform A. (Rectangular pulses at an amplitude of 4 V P-P and a period of 1000 ±4 usec.)	
		l. Enable vernier. Observe waveform similar to Waveform A. Connect counter to A2A6A16TP2 and observe counter variation between 1000.1 Hz	1000.1 Hz to 999.7 Hz

Table 6-6. Translator/Synthesizer Assembly A2A6, Adjustment and Alinement Procedures (Cont.)

STEP	TEST EQUIPMENT	PROCEDURES	ADJUSTMENT VALUE
1. Frequency Generator Subassembly A2A6A16 Adjustment (Cont.)		and 999.7 Hz as the vernier is operated. Disable vernier. m. Connect oscilloscope and counter to A2A6A16TP3. Observe Waveform B. (Pulses at an amplitude of 4 V P-P and a frequency of 100 kHz). n. Connect oscilloscope to A2A6A16TP4. Observe Waveform C. (Rectangular pulses at an amplitude of 4 V P-P and a frequency of 500 kHz).	
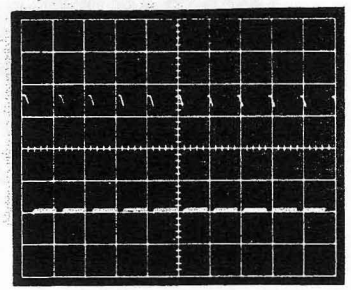 WAVEFORM B 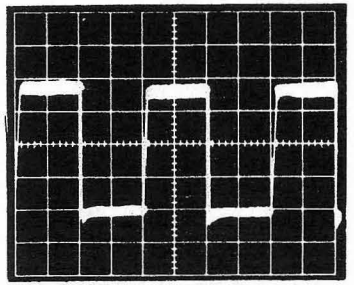 WAVEFORM C			
2. Synthesizer A2A6A17 Adjustment	Translator/Synthesizer Test Fixture TS-3665/WRC-1 Oscilloscope 80009-465M with test probe (10:1 attenuation)	a. Remove Synthesizer Subassembly A2A6A17 from Translator/Synthesizer. Insert extender into A2A6A17 slot and mate A2A6A17 subassembly with extender.	

Table 6-6. Translator/Synthesizer Assembly A2A6, Adjustment and Alinement Procedures (Cont.)

STEP	TEST EQUIPMENT	PROCEDURES	ADJUSTMENT VALUE
2. Synthesizer A2A6A17 Adjustment (Cont.)	Distortion Analyzer 28480-334A Frequency Standard AN/URQ-23 Rf Signal Generator 28480-8660C with 86601A and 86632B Plug-ins A2A6A17 Extender Card 98738 - 01A228398-01 Spectrum Analyzer 28480-8553B-E03 Digital Multimeter 89536-8800A/AA	b. Tune Translator/Synthesizer to 7.000 MHz by means of test fixture controls. c. Use digital multimeter to measure voltage at pin 1 of A2A6A17A1 VCO subassembly (Figure 7-73). d. Adjust A2A6A17A1L1 (through hole provided in VCO cover) until meter reads +4 ±0.1 V. e. Remove synthesizer subassembly A2A6A17 from extender. Remove extender from slot and reinstall A2A6A17 in its normal position. f. Tune Translator/Synthesizer to 5.000 MHz by means of test fixture controls. g. Remove side panel from Translator/Synthesizer assembly for access to	7.000 MHz +3.9 to +4.1 V 5.000 MHz 100 mV P-P

Table 6-6. Translator/Synthesizer Assembly A2A6, Adjustment and Alinement Procedures (Cont.)

STEP	TEST EQUIPMENT	PROCEDURES	ADJUSTMENT VALUE
2. Synthesizer A2A6A17 Adjustment (Cont.)		Translator Subassembly A2A6A8 and connect well grounded 10:1 probe on oscilloscope to A2A6A8E8. Adjust A2A6A17R10 to obtain a sine wave at an amplitude of 100 mV P-P. Connect spectrum analyzer with tracking generator in RESTORE SIGNAL mode to A2A6A17TP3 and measure frequency of 22.4 MHz ±100 Hz.	
		h. Tune Translator/Synthesizer to 6.000 MHz by means of test fixture controls. The frequency as read on the tracking generator at A2A6A17TP3 shall be 32.4 MHz ±100 Hz. The amplitude of the sine wave at A2A6A8E8 shall be 100 ±15 mV P-P.	6.000 MHz
		i. Connect distortion analyzer to A2A6P2A1 (IF OUT) or A2A6A8TP8. Set output of rf signal generator connected	5 mVrms at 6.000 MHz

Table 6-6. Translator/Synthesizer Assembly A2A6, Adjustment and Alinement Procedures (Cont.)

STEP	TEST EQUIPMENT	PROCEDURES	ADJUSTMENT VALUE
2. Synthesizer A2A6A17 Adjustment (Cont.)		to rf input of test fixture to 6.000 MHz at a level of 5 mVrms.	
		NOTE If it is not possible to set level on distortion analyzer with sensitivity and vernier at maximum, then increase output of rf signal generator slightly as necessary.	
		j. Measure the distortion.	1.5% or less distortion
		k. Change the signal generator and test fixture frequencies to 7.000 MHz and measure distortion.	1.5% or less distortion
		l. If distortion in Steps j. or k. is greater than 1.5%, replace A2A6A17A1 VCO subassembly and repeat steps a. through k.	1.5% or less distortion
		m. Disconnect external test equipment.	
		n. Connect oscilloscope to A2A6A17TP1. Observe Waveform B (pulses at an	

Table 6-6. Translator/Synthesizer Assembly A2A6, Adjustment and Alinement Procedures (Cont.)

STEP	TEST EQUIPMENT	PROCEDURES	ADJUSTMENT VALUE
2. Synthesizer A2A6A17 Adjustment (Cont.) 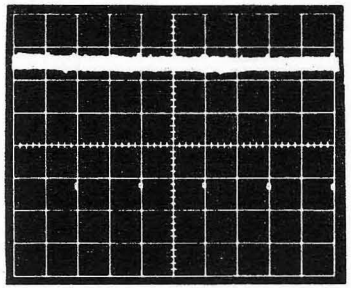 WAVEFORM D		amplitude of 4 V P-P and a frequency of 100 kHz). o. Connect oscilloscope to A2A6A17TP2. Observe Waveform D (negative-going pulses 300-500 nsec wide at a period of 10 usec and peak amplitude of 4 volts). This waveform shall be locked to the A2A6A17TP1 Waveform B. Check this by displaying both waveforms on alternate sweeps of the scope. Trigger scope from TP1. p. Repeat step o. for each position of the 100 kHz control of the test fixture.	
3. Synthesizer Circuit A2A6A20 and A2A6A19 Adjustment	Translator/Synthesizer Test Fixture TS-3665/WRC-1 Oscilloscope 80009-465M Spectrum Analyzer 28480-8553B-E03	a. Connect spectrum analyzer with tracking generator in RESTORE SIGNAL mode to TP1 of A2A6A20 (connected through A2A6A20 extender card). With test fixture frequency set to 6.000000 MHz measure frequency of	33.9999 to 34.0001 MHz

Table 6-6. Translator/Synthesizer Assembly A2A6, Adjustment and Alinement Procedures (Cont.)

STEP	TEST EQUIPMENT	PROCEDURES	ADJUSTMENT VALUE
3. Synthesizer Circuit A2A6A20 and A2A6A19 Adjustment (Cont.) 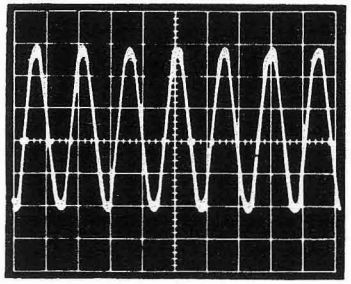 WAVEFORM E 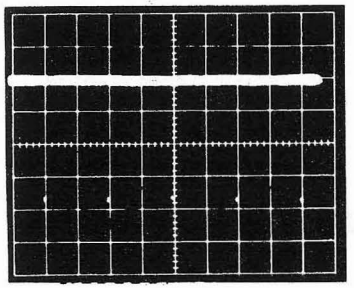 WAVEFORM F	Frequency Standard AN/URQ-23 Rf Signal Generator 28480-8660C with 86601A and 86632B Plug-ins Electronic Counter 28480-5328A-H99 A2A6A20 Extender Card 98738-01A228400-01 A2A6A19 Extender Card 98738-01A228390-01	signal at A2A6A20TP1 to be 34 MHz ±100 Hz. Then connect oscilloscope to A2A6A20TP1 and observe Waveform E (period of approximately 30 usec and amplitude of 0.3 to 1.5 V P-P). b. Connect oscilloscope to A2A6A20TP2. Observe Waveform F (200 - 400 nsec negative-going pulses with a period of 1000 usec and an amplitude of 4 volts P-P). Remove extender and replace A2A6A20 in its normal position. c. Connect oscilloscope to TP3 of A2A6A19 (connected through A2A6A19 extender card). Adjust A2A6A19R16 for sine wave amplitude of 200 ±10 mV P-P. Connect ac probe and spectrum analyzer with tracking generator in RESTORE	190 to 210 mV P-P

Table 6-6. Translator/Synthesizer Assembly A2A6, Adjustment and Alinement Procedures (Cont.)

STEP	TEST EQUIPMENT	PROCEDURES	ADJUSTMENT VALUE
3. Synthesizer Circuit A2A6A20 and A2A6A19 Adjustment (Cont.)		SIGNAL mode to A2A6-A19TP3. With test fixture frequency set to 6.000000 MHz, frequency of signal at TP3 shall read 3.4 MHz ±30 Hz. d. Connect oscilloscope to A2A6A19TP1. Observe Waveform B (rectangular pulses at an amplitude of 4 volts P-P). Connect counter to A2A6A19TP1. Frequency shall be 1 kHz ±0.1 Hz. e. With counter in A2A6-A19TP1, activate vernier. Observe that the frequency is between 1 kHz and 999.7 Hz. Deactivate vernier. f. Connect oscilloscope to A2A6A19TP2. Observe Waveform F (200 - 400 nsec negative-going pulses with a period of 1000 usec and an amplitude of 4 volts P-P).	999.7 Hz - 1 kHz

Table 6-6. Translator/Synthesizer Assembly A2A6, Adjustment and Alinement Procedures (Cont.)

STEP	TEST EQUIPMENT	PROCEDURES	ADJUSTMENT VALUE
3. Synthesizer Circuit A2A6A20 and A2A6A19 Adjustment (Cont.)		This waveform shall be locked to the A2A6A19TP1 Waveform B. Check this by displaying both waveforms on alternate sweeps of the oscilloscope. g. Repeat Step f. for each position of the 100 Hz, 1 kHz and 10 kHz frequency controls of the test fixture. Remove extender and replace A2A6A19 in its normal position.	
4. Synthesizer Subassembly A2A6A13 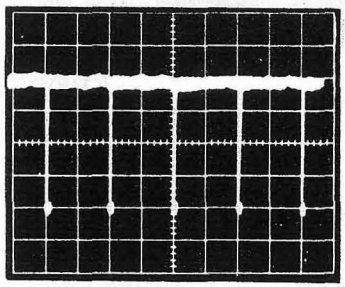 WAVEFORM G	Translator/Synthesizer Test Fixture TS-3665/WRC-1 Oscilloscope 80009-465M Frequency Standard AN/URQ-23 A2A6A13 Extender Card 98738-01A228392-01	a. Connect oscilloscope to TP1 of A2A6A13 (connected through A2A6A13 extender card). Observe Waveform G (negative-going pulses 40 to 400 usec wide at a period of 2 usec and an amplitude of 4 volts P-P). The width depends upon MHz setting. b. Connect oscilloscope to A2A6A13TP3. Observe	

Table 6-6. Translator/Synthesizer Assembly A2A6, Adjustment and Alinement Procedures (Cont.)

STEP	TEST EQUIPMENT	PROCEDURES	ADJUSTMENT VALUE
4. Synthesizer Sub-assembly A2A6A13 (Cont.) 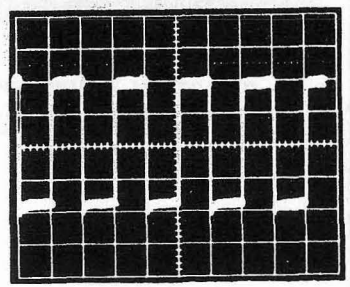 WAVEFORM H 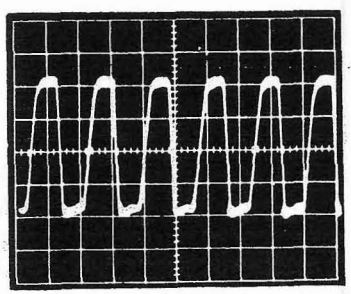 WAVEFORM I		Waveform H (rectangular pulse at a period of 2 usec and an amplitude of 4 volts P-P). This waveform shall be locked to the A2A6A13TP1 Waveform G. Check this by displaying both waveforms on alternate sweeps of the oscilloscope. c. Repeat Step b. for each valid position of the 1 MHz and 10 MHz controls of the test fixture. d. Connect oscilloscope to A2A6A13TP2. Observe Waveform I (rectangular pulses at an amplitude of 4 volts P-P and a period of approximately 40 to 500 nsec depending upon the test fixture 1 MHz and 10 MHz controls, i.e., 400 nsec at 22 MHz dial setting and 42 nsec at 6 MHz dial setting). Remove extender and replace A2A6A13 in its normal position.	

Table 6-6. Translator/Synthesizer Assembly A2A6, Adjustment and Alinement Procedures (Cont.)

STEP	TEST EQUIPMENT	PROCEDURES	ADJUSTMENT VALUE
5. 10 MHz/1 MHz Filter Subassembly A2A6A14 Adjustment	Translator/Synthesizer Test Fixture TS-3665/WRC-1 Digital Multimeter 89536-8800A/AA Oscilloscope 80009-465M Frequency Standard AN/URQ-23 A2A6A14 Extender Card 98738-01A228394-01.	a. Tune Translator/Synthesizer to 16.000 MHz by means of test fixture controls. b. Measure voltage at TP1 of A2A6A14 (connected through A2A6A14 extender card). It should be 0 to +0.4 V. c. Measure voltage at A2A6A14TP3 and A2A6A14TP5. These will both be +5 V nominal. d. Connect oscilloscope to A2A6A14TP5. Observe Waveform J. Adjust A2A6A14R7 for sinewave amplitude of 200 ±10 mV P-P and a period of approximately 280 nsec. e. Tune Translator/Synthesizer to 21.000 MHz by means of test fixture controls.	16.000 MHz 0 to +0.4 V 190 to 210 mV P-P

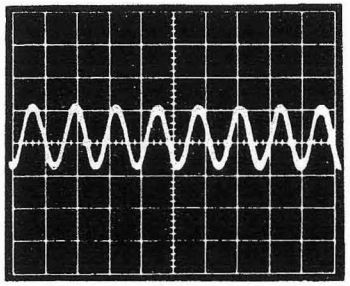

WAVEFORM J

Table 6-6. Translator/Synthesizer Assembly A2A6, Adjustment and Alinement Procedures (Cont.)

STEP	TEST EQUIPMENT	PROCEDURES	ADJUSTMENT VALUE
5. 10 MHz/1 MHz Filter Subassembly A2A6A14 Adjustment (Cont.)		f. Measure voltage at A2A6A14TP3. It should be 0 to +0.4 V.	0 to +0.4 V
		g. Measure the voltage at A2A6A14TP1 and TP6. These will both be +5 V nominal.	
		h. Connect oscilloscope to A2A6A14TP5. Observe Waveform J. Adjust A2A6A14R17 for waveform amplitude of 200 ±10 mV P-P and a period of approximately 105 nsec.	190 to 210 mV P-P
		i. Tune Translator/Synthesizer to 10.000 MHz by means of test fixture controls.	
		j. Measure voltage at A2A6A14TP6. It should be 0 to +0.4 V.	0 to +0.4 V
		k. Measure the voltage at A2A6A14TP1 and TP3. These will both be +5 V nominal.	

Table 6-6. Translator/Synthesizer Assembly A2A6, Adjustment and Alinement Procedures (Cont.)

STEP	TEST EQUIPMENT	PROCEDURES	ADJUSTMENT VALUE
5. 10 MHz/1MHz Filter Subassembly A2A6A14 Adjustment (Cont.)		1. Connect oscilloscope to A2A6A14TP5. Observe Waveform J. Adjust A2A6A14R27 for displayed amplitude of 200 mV ±10 mV P-P and a period of approximately 50 nsec. Remove extender and replace A2A6A14 in its normal position.	190 to 210 mV P-P
6. Translator Subassembly A2A6A8 Adjustment	Translator/Synthesizer Test Fixture TS-3665/WRC-1 Rf Signal Generator 28480-8660C with 86601A and 86632B Plug-ins Spectrum Analyzer 28480-8553B-E03 Frequency Standard AN/URQ-23	a. Remove side cover from Translator/Synthesizer Assembly for access to Translator Subassembly A2A6A8. b. Connect spectrum analyzer with ac probe to A2A6A8TP5 and connect oscilloscope to A2A6-A8TP8. c. Set output frequency of signal generator to 21.000 MHz and tune Translator/Synthesizer to 21.000 MHz by means of test fixture controls.	21.000 MHz

Table 6-6. Translator/Synthesizer Assembly A2A6, Adjustment and Alinement Procedures (Cont.)

STEP	TEST EQUIPMENT	PROCEDURES	ADJUSTMENT VALUE
6. Translator Subassembly A2A6A8 Adjustment (Cont.)		d. Adjust output amplitude of rf signal generator to obtain an indication of 5 mVrms.	5 mVrms
		e. Adjust A2A6A8T1 to obtain maximum output indication on oscilloscope.	Maximum output
		f. Vary the 100 kHz selector on the test fixture and on the signal generator simultaneously and synchronously through their complete ranges. Note the frequency of highest output and the frequency of lowest output.	
		g. At the frequency of highest output, adjust A2A6A8R52 for 250 ±20 mV P-P on the oscilloscope. The output at the frequency of lowest output level must be greater than 175 mV P-P.	230 to 270 mV P-P

Table 6-6. Translator/Synthesizer Assembly A2A6, Adjustment and Alinement Procedures (Cont.)

STEP	TEST EQUIPMENT	PROCEDURES	ADJUSTMENT VALUE
6. Translator Subassembly A2A6A8 Adjustment (Cont.)		h. Change the test fixture frequency to 22.000 MHz. Change the signal generator frequency to 22.000 MHz at an output level of 5 mVrms.	5 mVrms at 22.000 MHz
		i. Vary the 100 kHz selector on the test fixture and on the signal generator simultaneously and synchronously through their complete ranges. Note the frequency of highest output and the frequency of lowest output. The output must be between 200 mV and 300 mV P-P at the frequency of highest output.	200 -300 mV P-P
		j. If the highest output does not fall between 200 mV P-P and 300 mV P-P, adjust A2A6A8R36 so that the output falls within this range. The output at the frequency of lowest output level must be greater than 140 mV P-P.	200 - 300 mV P-P

Table 6-6. Translator/Synthesizer Assembly A2A6, Adjustment and Alinement Procedures (Cont.)

STEP	TEST EQUIPMENT	PROCEDURES	ADJUSTMENT VALUE
6. Translator Subassembly A2A6A8 Adjustment (Cont.)		If it is not possible to obtain 200 - 300 mV output range, change A2A6A8C44 from 0.01 uF to 22 pF, and repeat steps 6.c through 6.i.	
		k. Set controls on test fixture to test Translator/ Synthesizer in transmit mode with transmit IF switch at 10 mV.	10 mV
		l. Connect spectrum analyzer to A2A6A8TP6.	
		m. Tune Translator/Synthesizer to 7.100 MHz by means of test fixture controls. Adjust signal generator for an output of 3 mV at a frequency of 500 kHz.	3 mV at 500 kHz
		n. Adjust A2A6A8L14 for minimum output of the 19.5 MHz signal as observed on the spectrum analyzer.	Minimum output

Table 6-6. Translator/Synthesizer Assembly A2A6, Adjustment and Alinement Procedures (Cont.)

STEP	TEST EQUIPMENT	PROCEDURES	ADJUSTMENT VALUE
6. Translator Subassembly A2A6A8 Adjustment (Cont.)		o. Disconnect test equipment and reattach top and side covers of Translator/Synthesizer Assembly A2A6.	
7. Final Check	Translator/Synthesizer Test Fixture TS-3665/WRC-1 Rf Signal Generator 28480-8660C with 86601A and 86632B Plug-ins Spectrum Analyzer 28480-8553B-E03 Frequency Standard AN/URQ-23 Oscilloscope 80009-465M	a. Connect signal generator to test fixture RF IN jack (A2A6P3A1) at frequency of 6.000 MHz and 5 mV rms amplitude. Connect oscilloscope to IF OUT jack (A2A6P2A1). Set test fixture for receive and frequency for 6.000 MHz. b. Observe that output level is between 140 mV and 300 mV P-P. c. Vary the 100 kHz selector on the test fixture and on the signal generator simultaneously and synchronously through their complete range. Observe that the output is between 140 and 300 mV P-P.	5 mVrms at 6.000 MHz 140 to 300 mV P-P 140 to 300 mV P-P

Table 6-6. Translator/Synthesizer Assembly A2A6, Adjustment and Alinement Procedures (Cont.)

STEP	TEST EQUIPMENT	PROCEDURES	ADJUSTMENT VALUE
7. Final Check (Cont.)		d. Repeat steps a. and b. for a test fixture and signal generator setting of 7.000 MHz.	7.000 MHz
		e. Repeat step c. and observe that the output level is between 140 and 300 mV P-P.	140 to 300 mV P-P
		f. Connect signal generator to test fixture RF IN jack (A2A6P3A1) at frequency of 6.000 MHz and 5 mVrms amplitude. Connect spectrum analyzer with tracking generator in RESTORE SIGNAL mode to A2A6A8TP8. Activate vernier on test fixture. With vernier control fully counterclockwise observe an indication of 499.3 kHz ±200 Hz.	499.1 to 499.5 kHz
		g. Set vernier control fully clockwise; observe an indication of 497.7 kHz ±200 Hz.	497.5 to 497.9 kHz

Table 6-6. Translator/Synthesizer Assembly A2A6, Adjustment and Alinement Procedures (Cont.)

STEP	TEST EQUIPMENT	PROCEDURES	ADJUSTMENT VALUE
7. Final Check (Cont.)		h. Connect signal generator to IF IN jack (A2A6P2A2) at frequency of 500 kHz and level of 3 mVrms. Set test fixture for EXCITE and frequency for 2.222200 MHz. Connect spectrum analyzer to RF OUT jack (A2A6P3A2) and tracking generator in RESTORE SIGNAL mode.	3 mVrms at 500 kHz
		i. Observe that the output level is greater than 1.5 mVrms and that the frequency is the same as the dial ±30 Hz.	Greater than 1.5 mVrms
		j. Repeat steps h. and i. at the following test fixture frequency settings. 3.333300 MHz 4.444400 MHz 5.555500 MHz 6.666600 MHz 7.777700 MHz 8.888800 MHz 9.999900 MHz	Greater than 1.5 mVrms

Table 6-6. Translator/Synthesizer Assembly A2A6, Adjustment and Alinement Procedures (Cont.)

STEP	TEST EQUIPMENT	PROCEDURES	ADJUSTMENT VALUE
7. Final Check (Cont.)		10.000000 MHz 11.111100 MHz 12.000000 MHz 14.000000 MHz 15.000000 MHz 16.000000 MHz 19.000000 MHz 20.000000 MHz 22.000000 MHz	
		k. Connect signal generator to IF IN jack (A2A6P2A2) at frequency of 500 kHz and a level of 3 mVrms. Set test fixture for EXCITE and frequency for 7.100 MHz. Connect spectrum analyzer to RF OUT jack (A2A6P3A2) and record output level at 7.100 MHz.	3 mVrms at 500 kHz
		l. Adjust spectrum analyzer only for 19.5 MHz and observe output. It shall be at least 15 dB below value measured in step k.	15 dB below value measured in step k.

Table 6-7. Receiver Control Assembly A2A13, Adjustment Procedures

STEP	TEST EQUIPMENT	PROCEDURES	ADJUSTMENT VALUE
1. Preliminary	None	a. Set equipment controls as follows:	
		MODE SELECTOR switch to OFF, MHz, kHz and Hz controls to 2,000,000 Hz.	2.000000 Hz
		WARNING	
		Dangerous voltages are present in the equipment chassis. Avoid personal contact with circuitry.	
		b. Slide chassis from case and defeat power interlock by pulling the switch shaft forward.	
		CAUTION	
		Hand guide chassis assembly cable at rear of chassis over edge of case when rotating chassis assembly to vertical position.	
		c. Tilt the chassis assembly vertically to expose the underside.	
2. +20 V Check	Digital Multimeter 89536-8800A/AA	a. Connect digital multimeter between A2E11 (+) and chassis (-).	
		b. Set MODE SELECTOR Switch to LSB and set MGC/AGC switch A2A14S3 to SLOW.	
		c. Check that multimeter reading is in the range of +19 to +21 V.	+19 to +21 V
		CAUTION	
		If meter indicates either +28 or 0 Vdc, immediately return MODE SELECTOR switch to OFF and troubleshoot the +28V associated parts of Control Assembly A2A13 and Chassis Assembly A2.	

Table 6-7. Receiver Control Assembly A2A13, Adjustment Procedures (Cont.)

STEP	TEST EQUIPMENT	PROCEDURES	ADJUSTMENT VALUE
3. A2A13R5 Adjustment	Digital Multimeter 89536-8800A/AA	a. Connect digital multimeter between (center) pin 2 of A2A13R5 (+) and chassis (-).	
		b. Adjust A2A13R5*.	+1.9 to +2.1 V
4. Return to Normal Operation		a. Ensure that all test equipment is disconnected; return chassis assembly to horizontal position.	
		b. Slide receiver chassis back into case and secure it by tightening front panel screws.	
		c. Set MODE SELECTOR Switch A2A14S2 to STDBY or desired operating mode.	

*This is an initial adjustment only. Final adjustment is to be performed in accordance with table 6-1, step 8.

Table 6-8. Inspection Requirements for Radio Receiver R-1051H/URR

ITEM	CHECK FOR	CORRECTIVE ACTION
	CASE A1	
Case, A1	Cracks.	Replace case.
	Dents.	Replace case if dents are large. Small dents can be hammered out after removing chassis.
	Chipped paint, interior and exterior.	Touch up interior with lusterless enamel, color black No. 37038 of FED-STD-595. Allow 8 hours drying time. Touch up exterior with gray semigloss enamel per MIL-E-15090, Class 2, Type I.
External connectors	Cracks, bent or missing pins.	Replace cracked connector. Straighten or replace bent pins. Replace broken pins.
Internal cabling and wiring.	Broken conductors scraped insulation.	Replace affected conductors. Replace torn cable jacket.
Drawer slides	Bends; loose or missing hardware.	Replace bent slide. Tighten loose hardware. Replace missing hardware.
	CHASSIS ASSEMBLY A2	
Front panel, A2A14	Cracked or loose control knobs.	Replace cracked knobs. Tighten loose knobs.
	Jack cover springs.	Replace jack cover assembly if spring broken.
Chassis Assembly, A2, top	Cracked plug-in.	Replace.
	Broken or loose tuning couplers.	Replace if damaged. Tighten if loose.
Chassis Assembly, A2, bottom	Broken wires.	Replace.
	Loose tuning drive chains.	Tighten per paragraph 6-10.
	Worn tuning drive chains.	Replace.

Table 6-8. Inspection Requirements for Radio Receiver R-1051H/URR (Cont.)

ITEM	CHECK FOR	CORRECTIVE ACTION
Chassis Assembly, bottom (Cont.)	Worn gears; gears with broken or bent teeth.	Replace.
	Loose screws and hardware on gear assemblies.	Tighten.
	Loose screws and hardware on plug-in connectors.	Tighten.
	Bent or broken detent springs on dual and triple sprocket assemblies.	Replace.
	Leaking electrolytic capacitors.	Replace.
	Burned components.	Determine cause, correct fault and replace.
Plug-in assemblies, PCB's	Damaged connectors.	Straighten pins. Replace assembly if necessary.
	Dented dust covers.	Straighten if possible, otherwise replace assembly.
	Burned components.	Determine cause, correct fault and replace assembly.
	Leaking electrolytic capacitors.	Replace assembly.
	Damaged printed wiring boards.	Replace assembly.
	Damaged printed conductors.	Repair per paragraph 6-17.
	Broken or loose internal wiring.	Replace or repair as required.
	Loose or missing hardware.	Tighten or replace, as required.
	Broken or loose tuning couplers (A2A4 and A2A6 only).	Replace if damaged. Tighten if loose.

(1) Using extractor tool MS17806, remove the rf insert from the connector.
(2) Cut coaxial cable as close as possible to shell of rf insert; it may be necessary to cut through cable marker.
(3) Prepare the cable for insertion into a new rf insert by removing 7/16 inch of the outer jacket, cutting the shields 1/4 inch from the outer jacket end, and removing 1/16 inch of insulation from the center conductor.
(4) Slip the metal sleeve (part of the rf insert) over the cable.
(5) Insert the center conductor into the tube of the rf insert until the stripped portion rests in the channel at the center of the insert. Solder center conductor into place using SN60WRMAP solder.

NOTE

It may be necessary to flare the ends of the shields to permit them to slide over the outside of the tube.

(6) Solder the metal cap (part of the rf insert) into place.
(7) Slide the metal sleeve toward the body of the rf insert as far as possible. The braided shields will then be held in place around the tube by the sleeve.
(8) Crimp the sleeve using M22910/7-1 tool with 80920-612971 die.

b. To replace a connector rf insert (solder type) on flexible cable:
(1) Perform steps a.(1) through a.(7) above.
(2) Solder the sleeve to the body of the insert, using SN60WRMAP solder and a 42 watt iron. Be sure that solder enters the hole in the sleeve to achieve a solder joint between the sleeve and the cable shield.

c. To replace a connector rf insert on semi-rigid coaxial:
(1) Using extractor tool MS17806, remove the rf inserts from connectors at both ends of the cable.
(2) With a sharp knife cut off the heat shrink marker from the end of the coaxial undergoing repair.
(3) Remove the end cover from the connector by melting the solder, wicking or sucking the solder out and lifting the edge of the cover with the point of a sharp knife.
(4) Remove the solder from the connection of the coaxial center wire to the connector center pin.
(5) Heat the connection between the coaxial shield and the connector and withdraw the coaxial.
(6) Slip a new piece of heat shrink tubing over the end of the coaxial and push the coaxial into the new connector insert.
(7) Rotate the insert to the proper orientation and solder the center wire, the coaxial shield and the end cover respectively to the insert.
(8) Slide the new tubing into position and shrink in place.

6-17. PRINTED WIRING CONDUCTORS. Cracked or broken conductors on printed wiring boards are repairable.

NOTE

Repair to printed wiring conductors shall only be attempted by a trained and certified microminiature (2M) technician. If no such personnel is available, the PWB shall be replaced. This shall not apply to unsoldering and resoldering component(s) to a PWB, and only to the repair of the printed wiring conductors themselves.

To repair, proceed as follows:

a. Remove the coating (if present) from conductor a distance of about 1/4 inch either side of the break, using a 42-watt chisel tip soldering iron. The heat of the soldering iron will soften the coating to facilitate removal.
b. When coating has been removed, clean the conductor by scraping with a sharp blade.
c. Tin the cleaned section using SN60WRMAP solder.
d. Lay a piece of bare solid copper wire AWG 20 (smaller, if necessary) about 1/2 inch long on the tinned conductor, and solder into place with SN60WRMAP solder.
e. Coat the repaired section with protective coating type ER per MIL-I-46058 if repairing a coated board.

6-18. COMPONENT REPLACEMENT. To remove and replace a component on a printed circuit board, proceed as follows:

a. Cut component leads close to printed circuit board.
b. Remove component; do not force component from printed circuit board. If necessary, use a 42-watt (maximum) soldering iron to soften coating around component sufficiently to enable removal of component.
c. Unsolder cut leads from printed circuit board.
d. Install new component on printed circuit board, observing correct connections of orientation-sensitive components such as solid state devices and transformers. Solder in place with SN60WRMAP solder using heat sinks on component leads. Note in particular the orientation dots on the transformers as identified in figures 7-22 to 7-49.
e. Coat component and immediate area around component with protective coating type ER per MIL-I-46058 if repairing a coated board.

6-19. CLEANING. After removing covers from assemblies, clean the interiors with a stream of dry air not exceeding 15 psig. The chassis assembly and hard wired assemblies attached thereto may be cleaned in the same manner. Contact pins on connectors and vacuum tubes may be cleaned with trichloroethane per Federal Specification O-T-620. Apply with a soft brush or lint-free cloth. Allow cleaned parts to dry in a dust free location.

6-20. RECEIVER CASE A1.

6-21. GENERAL. Repair of Receiver Case A1 is accomplished at organizational level.

6-22. REMOVAL. Chassis Assembly A2 must be removed from the case for access to the interior of the case. To remove the chassis assembly from the case, proceed as follows:

a. Set MODE SELECTOR Switch A2-A14S2 to OFF and remove primary power connection from AC PWR IN connector A1A1J3.

CAUTION

Hand guide cable at rear of chassis assembly over edge of case when tilting chassis to vertical position.

b. Loosen front panel screws and pull chassis assembly forward. Pull slide latches and tilt chassis assembly upward to expose bottom.
c. Remove attaching hardware and cable clamp, then disconnect A1P1/A1P2 from A2J21/A2J22.
d. Return chassis assembly to horizontal position.
e. Release right and left forward limiters on drawer slides and pull chassis assembly forward about one inch.

CAUTION

Chassis/front panel assembly weighs approximately 70 pounds. Be prepared to handle this weight before pulling it free of case - it is advisable to use two people.

f. Pull chassis assembly forward until clear of case and drawer slides and place on bench.

6-23. DISASSEMBLY. After the chassis assembly has been removed, further disassembly of the case is not required since all parts are accessible for replacement. If the Filter Box Assembly A1A1 requires removal for replacement of a capacitor, disconnect external cable connections and remove exterior hardware which fasten connectors A1A1J3, A1A1J4, A1A1J5, and A1A1J6 to the case. Remove the connectors and filter box assembly as a unit.

6-24. INSPECTION. In addition to the inspection criteria in table 6-8, inspect the case for dents and check drawer slides for smooth operation.

6-25. REPAIR. Repair is accomplished by replacement of defective parts. After replacing interlock switch A1A2S1, connect an ohmmeter to the switch terminals and observe the ohmmeter for indication of proper opening and closing while operating the interlock plunger. Adjust the switch position if necessary.

6-26. CLEANING. Clean the interior of the case by the applicable methods of paragraph 6-19.

6-27. REASSEMBLY AND INSTALLATION. Reassembly of the filter box and cable/connector hardware is accomplished by following the procedures of paragraph 6-23 in reverse order. To install Chassis Assembly A2 in the case, proceed as follows:

a. Mate the chassis sections of the drawer slides with the cabinet sections, and push chassis assembly toward case until limiters engage.
b. Release latches and tilt chassis assembly A2 90 degrees to expose bottom.
c. Connect A1P1/A1P2 to A2J21/A2J22. Fasten cable clamp and connectors with hardware removed at disassembly.
d. Return chassis assembly to horizontal position and slide into case. Fasten with front panel screws.

6-28. ADJUSTMENT. No adjustment is required other than proper positioning of interlock switch A1A2S1 (Paragraph 6-25).

6-29. CHECKOUT. Reconnect any external cabling disconnected during disassembly and perform the maintenance turn-on procedures of table 5-5.

6-30. RECEIVER CHASSIS ASSEMBLY A2 AND HARD WIRED ASSEMBLIES.

6-31. GENERAL. The Chassis Assembly A2 and its hard wired assemblies are repairable at organizational level. If necessary to remove a plug-in assembly for access to a connector or mechanical part, such as tuning couplers, refer to the paragraph(s) describing removal of the specific assembly(ies).

6-32. REMOVAL. Generally, repairs to the Chassis Assembly A2 can be made by withdrawing A2 from the Case A1 on the drawer slides and tilting A2 90 degrees upward to expose the bottom or downward to expose the top, as required. However, if necessary to remove A2 from A1, perform removal procedures given in paragraph 6-22.

6-33. DISASSEMBLY. Disassembly of the Chassis Assembly A2 consists of removal of plug-in assemblies, removal of hard wired and other non plug-in type assemblies for replacement or repair, removal of the front panel assembly for replacement or repair, removal of the chain drive and sprocket assemblies for replacement or repair and removal of plug-in connectors for replacement. Do not disassemble Chassis Assembly A2 beyond the requirement of the specific repair task to be performed.

6-34. HARD WIRED/NONPLUG-IN ASSEMBLIES. The following hard wired assemblies are removable: Antenna Overload Assembly A2A9, 20 and 30 MHz Filter Assembly A2A10 and Hz Control and Vernier Subassembly A2A14A11, and in addition the Control Assembly A2A13, Front Panel Assembly A2A14 and Meter Driver Subassembly A2A14A12 are removable.

a. To remove Antenna Overload Assembly A2A9 (Figure 1-3):
   (1) Set MODE SELECTOR Switch A2A14S2 to OFF, and disconnect primary power at bulkhead distribution point.

(2) Loosen six captive screws on receiver front panel and with case firmly anchored to bench, slide chassis assembly out from case until slides lock.

CAUTION

Hand guide cable at rear of chassis assembly over front edge of case when tilting chassis to vertical position.

(3) Release latches and tilt chassis up to expose bottom. Be sure latches engage at 90 degree position.
(4) Remove four flat-head machine screws which fasten component shield (A2MP104, Figure 7-4S) covering Antenna Overload Assembly A2A9 and lift shield from chassis.
(5) Unscrew four hexagon spacers (A2MP112 through A2MP115, Figure 7-4S) which hold A2A9.
(6) Swing assembly aside to expose soldered leads.
(7) Unsolder and tag leads for identification.
(8) Remove A2A9 assembly from chassis assembly.

b. To remove 20 and 30 MHz Filter Assembly A2A10 (Figure 1-3):
(1) Perform steps a.(1) through a.(3) above.
(2) Remove two machine screws which secure shield (A2MP118, Figure 7-4A) and remove shield.
(3) Unscrew two hexagon spacers (A2MP120, MP121, Figure 7-4A) which hold A2A10.
(4) Perform steps a.(6) through a.(8) above.

c. To remove Control Assembly A2A13 (Figure 1-3):
(1) Perform steps a.(1) through a.(3) above.
(2) Remove four flat-head machine screws which fasten component shield (A2MP99, Figure 7-4S) covering Control Assembly A2A13 and lift shield from chassis.
(3) Disconnect A2P25 from A2-A13J1.
(4) Unscrew four hexagon spacers (A2MP95 through A2MP98, Figure 7-4S) which hold A2A13.
(5) Remove A2A13 assembly from chassis assembly.

d. To remove Vernier Switch Subassembly A2A14A11 (Figure 1-2):

NOTE

Do not remove A2A14A11 as a unit unless A2A14A11S1 or A2A14A11R1 require replacement.

(1) Perform steps a.(1) and a.(2) above.
(2) Loosen setscrews which fasten control knobs (A2MP60, MP61, Figure 7-79) to A2A14A11R1 and A2A14A11S1 respectively, and remove knobs.
(3) Remove RF Amplifier Assembly A2A4 (Paragraph 6-68) and Translator/Synthesizer Assembly A2A6 (Paragraph 6-89) from chassis assembly.
(4) Remove attaching hardware from shield (A2MP102, Figure 7-4S) behind front panel and lay shield on chassis. Take care not to break wires connected to A2R23.
(5) Remove attaching hardware from Hz control and Vernier Switch Subassembly A2A14A11, and position subassembly for access to wiring.
(6) Unsolder and tag all leads.
(7) Move A2A14A11 assembly toward rear of chassis assembly until control shafts are clear of front panel. Lift out Hz control and Vernier Switch Subassembly A2A14A11.

e. To remove 4 volt Power Supply Subassembly A2A14A11A1:
(1) Perform steps d.(1) through d.(4) above.
(2) Remove attaching hardware from Vernier Switch Subassembly A2A14A11 and move

assembly to gain access to screws on subassembly A2A14-A11A1.

(3) Remove two machine screws which hold subassembly A2-A14A11A1 to bracket (A2A14-A11MP1, Figure 7-80).

(4) Swing A2A14A11A1 aside and unsolder and tag leads. Lift out A2A14A11A1.

f. To remove variable resistor A2A14-A11R1:

(1) Perform steps d.(1) through d.(4) above.

(2) Unsolder and tag leads to variable resistor A2A14A11R1.

(3) Remove attaching hardware from Hz control and Vernier Switch Subassembly A2A14A11, and move subassembly to gain access to hex nut which attaches A2A14A11R1 to switchplate.

(4) With an open end wrench loosen A2A14A11R1 hex nut.

(5) Pull A2A14A11R1 back and remove from switchplate, taking care not to drop hex nut and lock washer into unit as shaft is removed.

g. To remove rotary switch A2A14-A11S1:

(1) Perform steps d.(1) through d.(5) above.

NOTE

Unlace wiring harness as required to provide necessary slack.

(2) Tag and unsolder leads to switch.

(3) Remove two screws and washers. These secure switch to switchplate. Carefully remove switch.

h. To remove Meter Driver Subassembly A2A14A12 (Figure 7-82):

(1) Perform steps a.(1) and a.(2) above.

(2) Remove RF Amplifier Assembly A2A4.

(3) Remove Translator/Synthesizer Assembly A2A6.

(4) Remove four screws securing component shield A2MP102 (Figure 7-4S). Swing shield back and down.

(5) Remove knob A2A14MP20 and the nut and washer behind it (Figure 7-79).

(6) Remove two screws securing A2A14A12 PCB to bracket A2A14MP155 (Figure 7-79). Unplug PCB from A2A14J3; entire PCB and switch assembly may now be lifted out.

i. To remove Front Panel Assembly A2A14 from Chassis Assembly A2:

(1) Perform steps a.(1) through a.(3) of paragraph 6-34.

(2) Disconnect A2A7P1 from A2J8 (Figure 7-4B).

(3) Remove drive chains, via steps e. through g. of paragraph 6-35.

(4) Remove three screws securing lower section of front panel assembly to chassis assembly (facilitated by removing cover of assembly A2A10). Put aside for subsequent reinstallation of the associated washers, spacers, and shims, where installed.

(5) Return chassis to horizontal position and remove the four corner hex nuts at rear of front panel assembly that secure this assembly to the chassis assembly. With chassis supported by a flat surface such as a table, work chassis assembly outward until there is sufficient space to allow disconnecting connectors A2A14P1 and A2A14P2 from A2J24 and A2J23 respectively, on vertical section of chassis adjacent to front panel (Figure 7-4B). Release slide lock retainers A2MP3 and A2-MP4 (Figure 7-4A) that secure connectors A2A14P1 and A2-A14P2 by pushing extended end of retainer to its nonextended (released) position. Disconnect A2A14P1 and A2A14P2 from jacks A2J24 and A2J23 respectively (Figure 7-4B).

(6) Slide Front Panel Assembly A2A14 free of Chassis Assembly A2.

6-35. TUNING CHAIN-DRIVE MECHANISM. To remove drive chains and sprocket assemblies, proceed as follows:

a. Set MODE SELECTOR Switch A2A14S2 to OFF, and disable primary power at bulkhead distribution point.
b. Loosen six captive screws on front panel and slide chassis assembly from case until slides lock.
c. Remove RF Amplifier Assembly A2A4 (Paragraph 6-68) and Translator/Synthesizer Assembly A2A6 (Paragraph 6-89) from chassis assembly.

CAUTION

Hand guide cable at rear of chassis assembly over front edge of case when tilting chassis assembly to vertical position.

d. Release latches and tilt chassis assembly up to expose bottom. Be sure latches engage at 90 degree position.
e. Loosen idler block (A2MP16, A2MP17, A2MP18 of Figure 7-4A) associated with the chain to be removed.
f. If the chain is metal, locate keeper clip on chain and remove clip. If chain is plastic/wire, cut through it with wire cutters.
g. Carefully remove chain from sprockets. Proceed with the following step if replacement chain will be plastic/wire. Replacement with metal chain does not require performance of step h.
h. Remove four nuts which fasten the associated sprocket assembly (A2MP15 and/or A2MP14 of figure 7-4A) to the chassis assembly. Lift out sprocket assembly. To disassemble a sprocket assembly (Figures 7-5, 7-6):
   (1) Remove two retaining rings located inside assembly housing and secured around shaft.
   (2) Loosen the coupler hub-clamp screw and punch out the shaft from end opposite coupler.
   (3) Separate parts of assembly as parts clear the shaft.

NOTE

Always note the position of all shims adjacent to the retaining rings; shims must be reinserted in the same position at reassembly.

6-36. INSPECTION. Inspect Chassis Assembly A2 and any removed hard wired assembly in accordance with the applicable portions of table 6-8.

6-37. REPAIR. Except for sprocket assemblies, repair is accomplished by replacement of defective parts, all of which are accessible. To repair sprocket assemblies proceed as follows:

a. Wipe all disassembled parts with a dry, lint-free cloth.
b. Inspect all parts for damage and replace as required.
c. Replace metal springs which provide tension between associated parts.
d. If shaft is scored, replace both coupler and shaft.
e. Replace detent springs if bent.
f. Replace hub clamp if it was evident during equipment operation that proper clamping action was not being maintained.

6-38. CLEANING. Refer to paragraph 6-19 for cleaning methods and materials. Clean removed parts and chassis assembly before reassembly.

6-39. REASSEMBLY. Reassembly consists of installation of hard wired and other nonplug-in assemblies, sprocket assemblies, and drive chains.

6-40. HARD WIRED/NONPLUG-IN ASSEMBLIES. Whenever electrically connected assemblies are being installed, the primary power cable shall be removed from AC PWR IN connector A1A1J3 at rear of receiver case. For steps a., b. and c. below, it is necessary to tilt the chassis assembly 90 degrees to expose bottom. The chassis assembly need not be tilted for steps d. and e.

a. To install Antenna Overload Assembly A2A9 (Figure 1-3):

(1) Solder leads to assembly.
(2) Swing assembly into place and fasten with four hexagon spacers (A2MP112 through A2-MP115, Figure 7-4S).
(3) Hold component shield (A2-MP104, Figure 7-4S) in place and fasten with four machine screws originally removed.

b. To install 20 and 30 MHz Filter Assembly A2A10 (Figure 1-3):
(1) Solder leads to assembly.
(2) Swing assembly into place and fasten with two hexagon spacers (A2MP120, MP121, Figure 7-4A).
(3) Hold shield (A2MP118, Figure 7-4A) in place and fasten with two machine screws originally removed.

c. To install Control Assembly A2A13 (Figure 1-3):
(1) Insert plug A2P25 into jack A2A13J1.
(2) Move assembly into place and fasten with four hexagon spacers (A2MP95 through A2MP98, Figure 7-4S) originally removed.
(3) Hold component shield (A2-MP99) in place and fasten with four flat-head machine screws originally removed.

d. To install 4 volt power supply subassembly A2A14A11A1:
(1) Solder leads to assembly.
(2) Fasten subassembly to bracket (A2A14A11MP1, Figure 7-80) with two machine screws originally removed.

e. To install Vernier Switch Subassembly A2A14A11 (Figure 1-2):
(1) If RF Amplifier A2A4 and Translator/Synthesizer Assembly A2A6 are in chassis assembly, remove them (Paragraphs 6-69, -89) and perform step e.(2) below.
(2) Insert A2A14A11 assembly behind the front panel and push control shafts through holes in panel.
(3) Solder leads to assembly.
(4) Fasten assembly into place with hardware originally removed.
(5) Reattach shield (A2MP102, Figure 7-4S) with hardware originally removed.
(6) Attach control knobs (A2A14-MP60, -MP61, Figure 7-7) and fasten to shafts with setscrews.
(7) Reinstall Translator/Synthesizer Assembly A2A6 and RF Amplifier Assembly A2A4 in chassis assembly.

f. To install Meter Driver A2A14A12 PCB:
(1) Move meter driver assembly into its normal position at rear of front panel, with switch shaft through mating hole in panel. Carefully orient meter driver assembly to enable insertion of its PCB connector contacts into jack A2A14J3 (Paragraph 6-34, step h.(6).
(2) Attach PCB to bracket A2-A14MP155 with two screws originally removed.
(3) Install knob A2A14MP20 with nut and washer originally removed.
(4) Attach component shield A2-MP102 with four screws originally removed.
(5) Reinstall Translator/Synthesizer Assembly A2A6 and RF Amplifier A2A4 in Chassis Assembly A2.
(6) Slide Chassis Assembly A2 into case and secure with six front panel captive screws.

g. To reassemble Front Panel Assembly A2A14 with Chassis Assembly A2:
(1) Place Front Panel Assembly A2A14 in convenient position resting on a flat surface in front of Chassis Assembly A2 to allow reconnecting A2A14P1 and A2A14P2 to jacks A2J24 and A2J23, respectively. Then push associated slide lock retainers (A2MP3 and A2MP4) into locked position.
(2) Employing blocking as necessary, carefully work the two

assemblies together until they are in position to permit securing attachment hardware (Paragraph 6-34, steps i.(4), (5).

(3) Secure the position of the two assemblies as achieved in step g.(2) by installing four hex nuts near rear corners of front panel. With case firmly anchored to bench, remove flat surface below chassis assembly and tilt to vertical position. Complete attachment of the two assemblies by replacing three screws that attach lower section of front panel assembly to chassis assembly (Paragraph 6-34, step i.(4).

(4) Connect A2A7P1 and A2J8 (Figure 7-4B).

(5) Attach drive chains (Paragraph 6-41, steps c. - g.).

(6) Complete the reassembly of the front panel to the chassis assembly by employing the procedures of paragraph 6-27, steps a. through d.

6-41. TUNING CHAIN-DRIVE MECHANISM. Proceed with the following four steps if reassembly of tuning chain-drive mechanism involves plastic wire chain. Otherwise go to step 5.

NOTE

Do not lubricate plastic chains as this will shorten their life; metal chain replacements should be lubricated.

a. When reassembling sprocket assemblies (Figures 7-5, 7-6) use new retaining rings in place of those which were removed. Reinsert shims in the same positions from which removed. Install plastic/wire chain over sprockets before assembling sprocket and shaft to casting.

NOTE

End play in the shafts shall be less than 0.025 inch. Add or remove shims as required.

b. Secure each sprocket assembly into position with four nuts.

c. Pass drive chain(s) over appropriate open drive sprocket (A2MP15 and/or A2MP14) and idler sprocket (A2MP16A, A2MP17A, or A2MP18A). Refer to figure 7-4A and table 7-2 to determine which chain is appropriate for each application.

d. Adjust in accordance with paragraph 6-43. Proceed with the following steps if reassembly of tuning chain-drive mechanism involves metal chain.

e. Thread drive chain(s) onto gears.

f. Fasten ends of each chain together using keeper clip.

g. Tighten idler block loosened in step 6-35 (e.).

6-42. INSTALLATION. If Chassis Assembly A2 was removed from Case A1 for repair purposes, follow procedures of paragraph 6-27 to install A2.

6-43. ADJUSTMENTS. After repairs on chain drive tuning mechanism, perform drive chain and coupler adjustments of paragraphs 6-10 and 6-11. After repairs on Control Assembly A2A13 perform adjustments and alinements of table 6-7. After repair and installation of 20 and 30 MHz Filter Assembly A2A10 and installation of Hz control and Vernier Switch Subassembly A2A14A11 perform step 7 of table 6-1.

6-44. CHECKOUT. Perform the maintenance turn-on procedures of table 5-5 to check out Radio Receiver R-1051H/URR.

6-45. MODE SELECTOR ASSEMBLY A2A1.

6-46. GENERAL. Mode Selector Assembly A2A1 is repairable at depot only; organizational level repair is limited to removal and replacement of A2A1, except the BFO adjustment in table 6-1.

6-47. REMOVAL. The location of the Mode Selector Assembly A2A1 is shown in figure 1-2. To remove the assembly:

a. Move MODE SELECTOR Switch A2A14S2 to OFF position.

b. Loosen six front panel screws and pull Chassis Assembly A2 from Case A1 until slides lock.
c. Loosen two captive screws securing A2A1 to the chassis assembly.
d. Gently pull Mode Selector Assembly A2A1 upward using captive screws as handles.

6-48. DISASSEMBLY. Disassemble Mode Selector Assembly A2A1 only to the extent necessary to gain access to a defective component requiring replacement. To disassemble A2A1 proceed as follows:

a. To remove cover (A2A1MP1, Figure 7-7):
   (1) Remove one screw, at top of assembly, securing cover.
   (2) Lift cover off assembly.
b. To remove Mode Gates Subassembly A2A1A1, 500 kHz Gate Subassembly A2A1A2, or BFO and Amplifier Subassembly A2A1A3, (Figure 7-7):
   (1) Remove four screws and associated washers securing subassembly.
   (2) Swing subassembly aside and unsolder and tag wires for identification at reassembly.
   (3) Lift out subassembly.
c. Removal of other parts is obvious by visual inspection.

6-49. INSPECTION. Inspect Mode Selector Assembly A2A1 and subassemblies in accordance with the applicable portions of table 6-8.

6-50. REPAIR. Make necessary repairs in accordance with instructions given in paragraphs 6-15 through 6-18.

6-51. CLEANING. Clean parts and subassemblies of Mode Selector Assembly A2A1 in accordance with the applicable portions of pararagaph 6-19.

6-52. REASSEMBLY. To reassemble Mode Selector Assembly A2A1 reverse the disassembly procedure. Do not install cover until paragraph 6-53 has been performed.

6-53. ADJUSTMENT. Perform the adjustment and alinement procedures of table 6-2.

6-54. INSTALLATION. To install Mode Selector Assembly A2A1 in Chassis Assembly A2:

a. Turn captive screws counterclockwise until held by Mode Selector Assembly A2A1 chassis.
b. Install Mode Selector Assembly A2A1 in the chassis assembly in the position shown in figure 1-2.
c. Press down gently on Mode Selector Assembly A2A1 to mate connectors on assembly with connectors on chassis assembly.
d. Secure Mode Selector Assembly A2A1 in place with captive screws.

NOTE

After installation, adjust BFO frequency and level as instructed in table 6-1, step 5 and check performance of Radio Receiver R-1051H/URR in accordance with table 5-5.

6-55. IF/AUDIO AMPLIFIER ASSEMBLIES A2A2 AND A2A3.

6-56. GENERAL. IF/Audio Amplifier Assemblies A2A2 and A2A3 are identical and are repairable at depot only. Organizational level repair is limited to removal and replacement of the assemblies except for overall adjustments in table 6-1.

6-57. REMOVAL. The locations of IF/Audio Amplifier Assemblies A2A2 and A2A3 are shown in figure 1-2. To remove either assembly:

a. Move MODE SELECTOR Switch A2A14S2 to OFF position.
b. Loosen six screws on front panel and pull Chassis Assembly A2 from Case A1 until slides lock.
c. Loosen two captive screws (Figure 7-11) securing IF/Audio Amplifier Assembly to the chassis assembly.
d. Gently pull IF/Audio Amplifier Assembly upward using captive screws as handles.

6-58. DISASSEMBLY. Disassemble IF/Audio Amplifier Assemblies only to the

extent necessary to gain access to a defective component requiring replacement. To disassemble IF/Audio Amplifier Assembly proceed as follows:

a. To remove cover (A2A2/A2A3MP2, Figure 7-11):
   (1) Remove two screws, at top of assembly, securing cover.
   (2) Lift cover from assembly.
b. To remove AGC Audio Amplifier Subassembly A2A2/A2A3A1, IF/Audio Amplifier Subassembly A2A2/A2A3A2, and SSB-AM Detector Subassembly A2A2/ A2A3A3 (Figure 7-11):
   (1) Unsolder and tag all leads.
   (2) Remove attaching hardware and lift out subassembly.
c. To remove transformer A2A2/A2A3T1 (Figure 7-11):
   (1) Remove two screws and washers which attach A2A2/A2A3T1 to chassis A2A2/A2A3MP1.
   (2) Swing transformer out; unsolder and tag all leads.

6-59. INSPECTION. Inspect IF/Audio Amplifier Assemblies A2A2/A2A3 and subassemblies in accordance with the applicable portions of table 6-8.

6-60. REPAIR. Make necessary repairs in accordance with instructions given in paragraphs 6-15 through 6-18.

6-61. CLEANING. Clean parts and subassemblies of IF/Audio Amplifier Assemblies A2A2/A2A3 in accordance with the applicable portion of paragraph 6-19.

6-62. REASSEMBLY. To reassemble IF/Audio Amplifier Assemblies A2A2/A2A3 reverse the disassembly procedure. Do not install cover until paragraph 6-63 has been performed.

6-63. ADJUSTMENT. Perform the adjustment and alinement procedures of table 6-3; completion of the procedures in table 6-3 satisfies the requirement for checkout.

6-64. INSTALLATION. To install IF/Audio Amplifier Assembly A2A2 or A2A3 in Chassis Assembly A2:

a. Turn captive screws counterclockwise until held by IF/Audio Amplifier Assembly chassis.
b. Install the IF/Audio Amplifier Assembly in A2A2 or A2A3 position, as applicable, in the chassis assembly in the position shown in figure 1-2.
c. Press down gently to mate A2A2/A2A3P1 with connector in chassis assembly.
d. Secure IF/Audio Amplifier Assembly in place with captive screws.

NOTE

After installation, perform step 7 of table 6-1 as applicable to the IF/Audio Amplifier Assembly A2A2 or A2A3 and check performance of Radio Receiver R-1051H/URR in accordance with table 5-5.

6-65. RF AMPLIFIER ASSEMBLY A2A4.

6-66. GENERAL. Organizational repair of RF Amplifier Assembly A2A4 is limited to replacement of vacuum tubes A2A4V1 and A2A4V2 (Paragraph 6-67), or replacement of A2A4 as a unit. Further repair and adjustment is made only at depot.

6-67. VACUUM TUBE REMOVAL AND REPLACEMENT. To remove and replace either of vacuum tubes A2A4V1 or A2A4V2 proceed as follows:

a. Set MODE SELECTION Switch A2A14S2 to OFF, loosen front panel captive screws, and extend chassis from case.
b. Reach through the slot in the rf amplifier assembly cover and pull the tube shield upward from the tube to be replaced.
c. Using tube puller, reach through the slot and remove the tube from its socket.
d. Hold replacement tube with pins oriented to mate with socket.
e. Insert tube through slot and push downward to seat tube properly.
f. Reinstall tube shield, slide chassis into case, and secure using front panel screws.

6-68. REMOVAL. To remove the RF Amplifier Assembly A2A4:

a. Set MODE SELECTOR Switch A2-A14S2 to OFF position.
b. Loosen six front panel screws and pull Chassis Assembly A2 from Case A1 until slides lock.
c. Loosen four captive screws, one at each corner of the assembly.
d. Lift assembly gently from the chassis assembly using captive screws as handles.

6-69. DISASSEMBLY. Do not disassemble RF Amplifier Assembly A2A4 further than required for access to parts to be repaired or replaced. The major parts to be disassembled are illustrated in figures 6-7, 6-8, and 6-9. For further detail information see figures 7-15 through 7-58 and the parts list, Table 7-2. To disassemble the rf amplifier assembly:

a. With the assembly placed on a workbench, remove the six dustcover screws and lift off cover (A2A4MP5, Figure 7-15). Lift the white plastic ring from the slot between the top plate and top turret ring assemblies.
b. Remove the four captive screws which secure the assembly to the chassis assembly.
c. Loosen the three screws securing the turret assembly drive motor A2A4B1 to the base. Slide motor to one side to disengage motor gear assembly from the turret drive gear. Secure motor in this position.
d. Rotate the complete turret assembly until the contacts of adjacent megahertz subassemblies are located at either side of the contacts of the outer stator contact strips attached to the rf section. One set of the three outer contact strips (identified by a small green rectangle) is located to the right of test point A2A4TP4 near the outer edge of the top plate as depicted in figure 7-15. The actual contacts are visible under the green rectangle (as viewed obliquely through the slot from which the teflon ring was removed). Hold the turret assembly in this position and remove the four screws securing top turret ring. Carefully lift off ring and remove all megahertz subassemblies. It may be necessary to rotate the turret slightly when removing the megahertz subassemblies near or in contact with the outer stator contacts.
e. Remove the two screws securing connector A2A4P2 to base.
f. Loosen setscrews on each of the couplers A2A4MP62 and A2A4MP63 (on bottom of base). Heat couplers with heavy soldering iron to break loctite seal. Use long nose pliers at coupler hub to slide each coupler from rotor shaft.
g. Carefully remove the locating pin from each shaft. Grip with pliers. Turn and pull gently until clear.
h Remove the three screws and washers securing the rf chassis to the base (Figure 6-8).
i. Remove the screw and washer securing support post to base.
j. Remove nut and washer securing ground strap for A2A4P2A5. This is located opposite motor relay.

6-70. To remove 100/10 kHz turret assembly, rf chassis and top plate:

CAUTION

Hold the 100/10 kHz turret assembly and rf chassis together with rubber bands, to avoid damaging contacts and wafers. Do not move or separate sections until the combined sections have been placed on a workbench.

CAUTION

Do not remove the turret gear assembly from the base except specifically for replacing assembly or block brushes. Each time the gear assembly is removed, the brushes are exposed to dirt as well as possible damage.

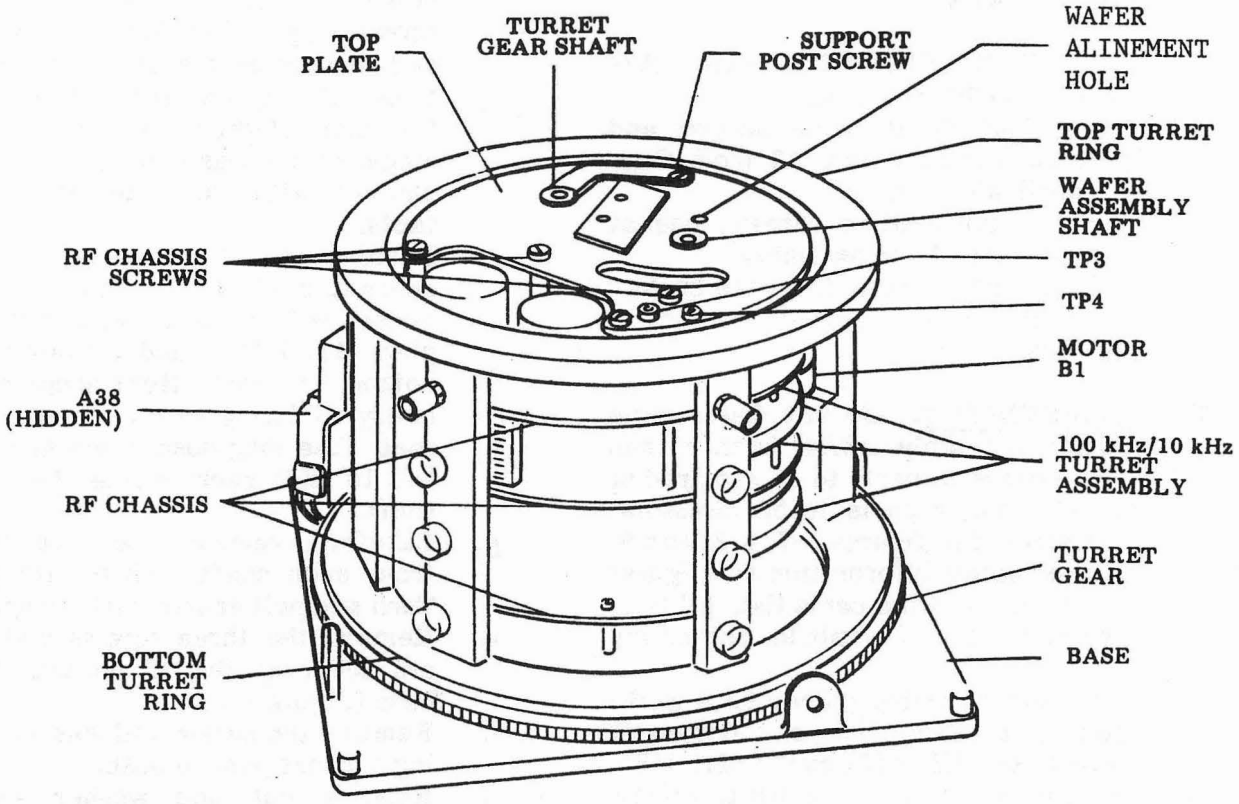

Figure 6-7. RF Amplifier Assembly A2A4, Disassembly Parts Identification

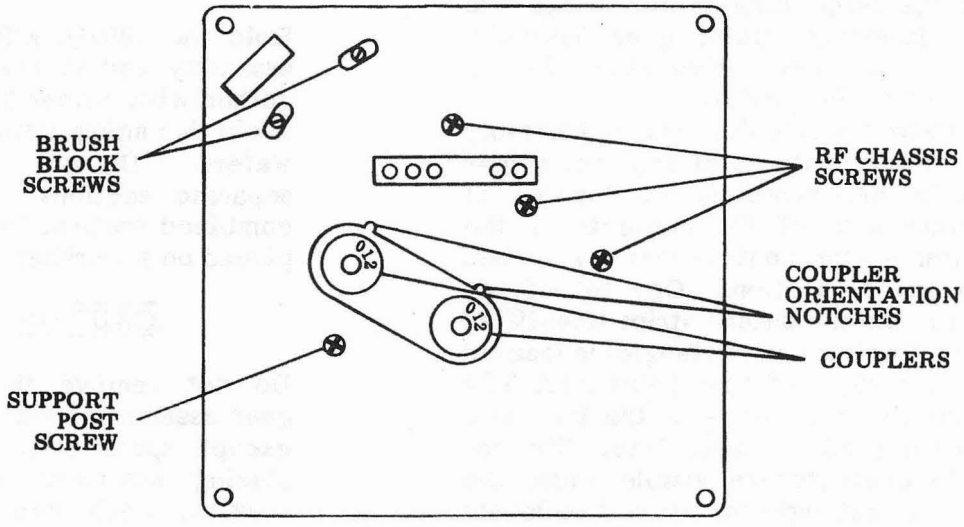

Figure 6-8. Rf Amplifier Assembly A2A4, Bottom View, Disassembly Screw Locations

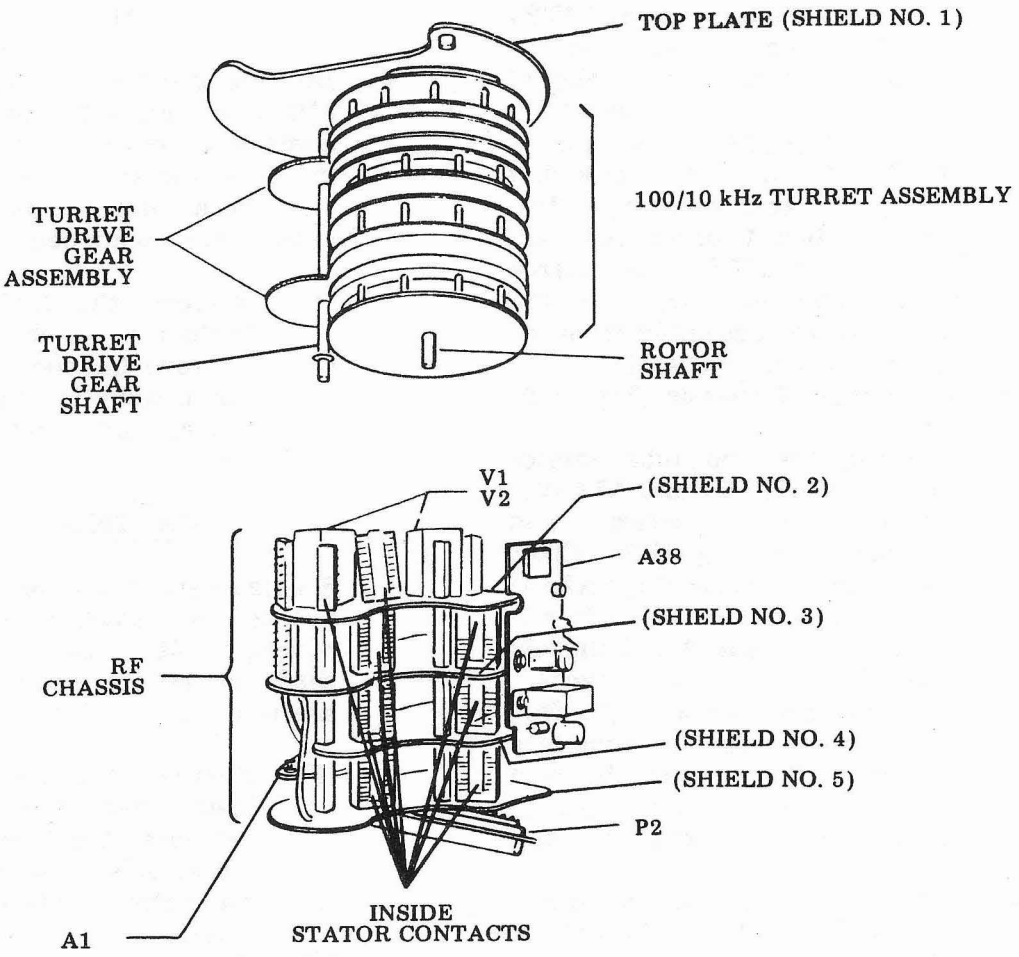

Figure 6-9. Rf Amplifier Assembly A2A4, Rf Chassis and Turret Assembly, Disassembly Parts Location

a. While holding the base, begin lifting the top plate. When the two sections have cleared the base, lift them with both hands and place them on the bench. Note washers at shaft holes.
b. Remove the screw securing the support post to top plate and remove post.
c. Unsolder wires connecting A2A4TP3 and A2A4TP4 (ground test point). Remove the three screws securing rf chassis to top plate and carefully separate the top plate from the rf chassis 100/10 kHz turret assembly and turret drive gear assembly. Now separate the turret drive gear assembly from the 100/10 kHz turret assembly. Carefully separate the 100/10 kHz turret assembly from inside stator strips on rf chassis.
d. To disassemble rf chassis (Figure 6-9):
   (1) Remove the top tube shields and tubes A2A4V1 and A2A4V2.
   (2) Remove three screws and washers securing RF Mixer Amplifier Subassembly A2A4-A38 to rf chassis and pull A2-A4A38 with rear shield slightly away from mounting brackets.
   (3) Tag and unsolder wires to free A2A4A38 for complete removal. Separate shield from A2A4A38, taking care not to break the wire passing through the shield.
   (4) Remove two screws and washers which fasten A2A4A1 in place, unsolder and tag leads, and remove A2A4A1. Individual components on A2A4A1 are accessible for replacement without removing A2A4A1. Unsolder and replace as necessary.
   (5) Starting from top, separate shields of rf chassis by unscrewing spacers between shields 2, 3 and 5, and unsoldering interconnecting wires. Do not disassemble unless the component to be replaced is not accessible without disassembly. If bottom shield is to be removed or replaced, remove two screws securing RF Amplifier Subassembly A2A4-A1, and unsolder and tag wires as necessary to free the board.
e. To disassemble the 100/10 kHz turret assembly:

NOTE

Do not disassemble 100/10 kHz turret assembly unless a component on the assembly is to be replaced. Remove only those parts necessary to replace the component.

   (1) Remove the E-ring from the bottom of the shaft.
   (2) Remove the top and bottom rotor assemblies by driving out the roll pin from each assembly.

CAUTION

Special care must be taken not to bend shaft when removing roll pins. Brace shaft at points where pins are to be removed.

   (3) Remove the next upper and lower gear rotor assemblies by removing the E-ring located on either side of each assembly on the turret shaft (there are six rings).
   (4) Remove the center rotor assembly by driving out the roll pin (located in the hub).
f. To remove the gears from the turret drive gear assembly (Figure 6-9):
   (1) Drive out the roll pin from each gear.
   (2) Slide gears from shaft. The bottom gear can be removed easily by removing the E-ring and sliding from bottom of shaft.

NOTE

Removal of gears from shaft is not necessary if gears are

intact and not in need of replacement. However, the E-ring at base of shaft must be removed to facilitate later reassembly procedures (Paragraph 6-74, step (letter) 1).

g. To remove turret gear from base:
   (1) Remove six screws and washers securing bearing retainers to base.

NOTE

Screw next to motor relay is longer than the other five.

   (2) Remove six bearing retainers.

CAUTION

When handling turret gear assembly be extremely careful not to scratch or otherwise damage the surface of the code ring. Always place the gear on bench with the code ring facing upward.

   (3) Carefully lift the turret gear assembly with bottom turret ring from base.
   (4) Remove the four nuts securing bottom ring to turret gear assembly and lift off turret ring. Note the locating pin between the A24 and A25 positions on the ring. Separate ring bearing from gear.
   (5) Remove the four turret posts only if necessary. To remove, unscrew each post.

NOTE

Do not remove brush block assembly (A2A4MP31, Figure 7-16) from base unless the brushes are to be replaced.

h. To remove brush block:
   (1) Remove two screws securing brush block assembly to base.
   (2) Unsolder the six code leads (five at P1 and one at the motor relay).

6-71. INSPECTION. Inspect all disassembled parts of the RF Amplifier Assembly A2A4 in accordance with the applicable portions of table 6-8 and the following:

a. Inspect stator strips. Replace if badly bent and cannot be straightened to accept tabs properly.

NOTE

All contacts should close with sufficient tension to ensure proper electrical contact.

b. Inspect code ring on underside of gear assembly. Replace gear if code ring is broken or scratched to the extent that continuity is broken. To inspect code ring, rotate gear assembly while observing through brush block openings. It is not necessary to remove gear assembly from base for inspection.
c. Inspect brush blocks. Replace if contacts are badly bent or if visibly worn or chipped.
d. Inspect tube sockets. Replace damaged sockets.

6-72. REPAIR. Make necessary repairs in accordance with instructions given in paragraphs 6-15 through 6-18. Do not repair turret motor, motor relay, or tube socket assemblies if known to be defective. Replace as complete units.

6-73. CLEANING. Clean in accordance with applicable portions of paragaph 6-19. Clean all mechanical parts with a dry lint-free cloth.

6-74. REASSEMBLY. Basically, reassembly of the rf amplifier is the reverse of disassembly. See figures 6-7, 6-8 and 6-9 during reassembly. However, there are many precautions and slight variations to be observed in the reassembly process as follows:

a. Reassemble all mechanical and electrical components of rf section except top plate; do not remount RF Mixer Amplifier Subassembly A2A4-A38 at this time. Resolder all wire connections except wires going to test points A2A4TP3 and A2A4TP4. Reinstall tubes and tube shields.

b. Reassemble 100/10 kHz turret assembly, using new E-rings where applicable. Special care must be taken not to bend the shaft when replacing the roll pin in the hub of each rotor assembly. Brace shaft near points where pins are to be reinserted. Use guide rod to aline roll pin holes prior to reinserting pins. Ensure that alinement holes through wafers and top shield are alined on the right side of the flat on shaft when viewed from coupler end of shaft with the nut facing down.

c. Reassemble turret drive gear assembly. Do not install E-ring on shaft at this time.

d. Press ring bearing into code ring and gear assembly. Install the four turret posts. Position bottom turret ring onto gear assembly by mating roll pin on gear assembly with hole in the bottom turret ring (hole is between megahertz assembly positions A2A4A24 and A2A4A25. Secure bottom turret ring to gear assembly. Reassemble gear assembly onto the base using the six bearing retainers.

e. Mesh 100/10 kHz turret assembly wafers with inside stator contact strips of rf chassis as follows:

CAUTION

In following steps do not spread contacts more than required to slide wire through.

(1) Thread one 5-inch length of AWG 16, single-strand, insulated wire through each row of horizontal contacts on the inner stator contact strips to force contacts to open slightly (in order to engage 100/10 kHz turret assembly wafers).

(2) Carefully mesh wafers of the 100/10 kHz turret assembly with all contacts. The two inner stator contact strips on the upper rf chassis are not secured until the top plate is secured. These contact strips should be positioned in a vertical plane, and then meshed with the wafers. Ensure that the shields of the rf chassis extend over the wafers, and that the grounding springs attached to shields 2, 3, and 4 are positioned on the top side of the 100/10 kHz turret assembly.

(3) Slide the AWG-16 wires out of the contacts. Visually check that all contacts of stator contact blocks close sufficiently on wafers. Note that not all contacts are used.

f. Mesh turret drive gear assembly with gears on 100/10 kHz turret assembly. Hold the three assemblies (turret drive gear assembly, 100/10 kHz turret assembly, and rf chassis assembly) intact, and attach the top plate to the proper ends of the three assemblies. Ensure that the tabs of the upper inner stator contact strips, and the outer stator contact strips are positioned within the rectangular holes in the top plate. Secure the top plate with the three original screws to the rf chassis.

g. Resolder the two wires to A2A4TP3 and A2A4TP4 (ground test point) under the top shield.

h. Aline the two flat washers with the two bearings in the base. Carefully lift the assemblies and place in position on base. Set support post in position between top shield and base. Secure support post to top shield. Secure rf chassis and support post to base.

i. Reinstall locating pins into shafts of 100/10 kHz turret assembly and turret drive gear assembly.

j. Slide coupler onto 100/10 kHz turret assembly shaft. Ensure that the hub of the coupler is not beyond the bottom surface of the base. Apply

sealing compound, Grade E, per MIL-S-22473 to coupler setscrew; tighten setscrew against flat of the 100/10 kHz rotor shaft.

k. Rotate the coupler so that 0 on coupler is adjacent to, and alined with, notch in base. Insert 4 inch, 0.125 inch diameter rod in top alinement hole on top shield. Rod should then pass through all wafers to base. If the upper or lower rotor assembly has been rotated from the position established in step b., reposition either or both assemblies to allow the rod to pass through freely.

l. Slide coupler onto turret drive gear assembly shaft. Rotate coupler without engaging gears on 100/10 kHz turret assembly, so that 0 is adjacent to and alined with notch in base. Push shaft up so that gears engage, and place new E-ring onto turret drive gear assembly shaft. Remove the rod. Remount RF Amplifier Assembly A2A4A38.

m. Push connector A2A4P2 through slot in base and secure to base with two screws.

n. Reattach ground strap for A2A4P2A5 on screw opposite motor relay using nut and lock washer.

o. Insert any one of the 28 megahertz strips into the bottom turret ring; select a location that is not near any outer stator strip contacts. Position the top turret ring over the megahertz subassembly. Ensure that the A designation on the top turret ring corresponds to the A designation on the bottom turret ring. Secure the top turret ring using the four screws. Carefully rotate the turret assembly so that the megahertz subassembly contacts pass through the three sets of outer stator strip contacts. Ensure that there is an equal distance between each set of outer stator strips and the megahertz subassembly. If the dimensions are not equal, or should any interference exist between any one of the outer stator strips and the megahertz subassembly, loosen the three rf chassis screws and the support post screw. Adjust the rf chassis until the spacing is equal or the interference is eliminated. Tighten the four screws to secure the rf chassis and support post. Rotate turret assembly to break the connection between outer stator strip contacts and megahertz subassembly contacts. Remove the four screws securing the top turret ring and remove the ring. Remove the megahertz subassembly.

p. Rotate turret gear assembly until any two adjacent rectangular slots in the bottom turret ring are located at either side of the contacts on the bottom set of outer stator strips. Hold the gear assembly in this position and insert all megahertz subassemblies. (Prior to inserting the megahertz subassemblies in their respective rectangular slots, inspect all contacts to ensure that they are not bent or misalined.) Also ensure that each megahertz subassembly is in its correct location and that it is positioned "right side up" — i.e., with transformer T4 (as shown in figures 7-22 through 7-49) adjacent to the top turret ring.

q. Position the top turret ring over the megahertz subassemblies. Ensure that the A designation on the top turret ring corresponds to the A designation on the megahertz subassemblies and the A designations on the bottom turret ring. Ensure that all megahertz subassemblies are properly mated into the rectangular slots in both the top and bottom turret rings. Secure using the four original screws.

r. Engage gear of turret assembly drive motor with turret drive gear. Loosen screws securing turret assembly drive motor and engage the motor gear with the gear assembly. Tighten screws.

s. Place white plastic ring in slot between top plate and top turret assemblies.

t. Reattach dust cover unless adjustments are to be made.

6-75. ADJUSTMENT. Perform the adjustment and alinement procedures of table 6-4. Completion of the procedures in table 6-4 satisfies the requirement for checkout.

6-76. INSTALLATION. To install the RF Amplifier Assembly A2A4 in Chassis Assembly A2:

a. Set MODE SELECTOR Switch A2-A14S2 to OFF and kHz controls to 000.
b. Place RF Amplifier Assembly A2A4 in position on the chassis assembly and press gently into place to mate connectors and couplers.
c. Secure assembly in place with four captive screws, one at each corner.

NOTE

After installation is complete, perform step 8 of table 6-1 and check performance of Radio Receiver R-1051H/URR in accordance with table 5-5.

6-77. FREQUENCY STANDARD ASSEMBLY A2A5.

6-78. GENERAL. Frequency Standard Assembly A2A5 is repairable at depot only. Organizational level repair is limited to removal and replacement of the assembly, except for overall adjustment in table 6-1.

6-79. REMOVAL. The location of Frequency Standard Assembly A2A5 is shown in figure 1-2. To remove the assembly:

a. Set MODE SELECTOR Switch A2-A14S2 to OFF position.
b. Loosen six screws on front panel and pull Chassis Assembly A2 from Case A1 until slides lock.
c. Loosen two captive screws (A2A5-MP15, MP16, Figure 7-59) securing Frequency Standard Assembly to chassis assembly.
d. Gently pull Frequency Standard Assembly upward, using captive screws as handles.

6-80. DISASSEMBLY. Disassemble the Frequency Standard Assembly only to the extent necessary to gain access to a defective component requiring replacement. To disassemble the Frequency Standard Assembly proceed as follows:

a. To remove cover (A2A5MP13, Figure 7-59):
   (1) Remove five screws, lock washers and flat washers which attach cover to baseplate (A2-A5MP1, Figure 7-60) and switch bracket. Two screws are located at each side; one at the top.
   (2) Record position of indicator dial (A2A5MP6, Figure 7-60) as seen through INDEX window.
   (3) Lift cover from assembly.
b. To remove Divider/Amplifier Subassembly A2A5A2 (Figure 7-62):
   (1) Remove the two screws which fasten the subassembly to the Oven Body Subassembly A2A5-A3 (Figure 7-63) and two each screws, lock washers and flat washers which fasten the subassembly at the bottom.
   (2) Unsolder and tag leads and lift out subassembly. Take care not to lose spacers (A2A5MP3, A2A5MP4, Figure 7-64):
c. To remove Oven Body Subassembly A2A5A3 (Figure 7-63):
   (1) Perform part (1) of step b. above.
   (2) Remove two screws which fasten subassembly from underside of baseplate.
   (3) Lift off subassembly with 5 MHz Reference Control Subassembly A2A5A4 (Figure 7-64) attached.
d. To remove 5 MHz Reference Control Subassembly A2A5A4 (Figure 7-64):
   (1) Perform step c. above.
   (2) Remove screw, nylon washer and lock washer which attach subassembly A2A5A4 to Oven Body Subassembly A2A5A3.
   (3) Swing aside subassembly A2-A5A4. Unsolder and tag leads. Lift off subassembly A2A5A4.

e. To remove Oven Body Assembly A2A5A3 from sleeve assembly A2A5MP2 (Figure 7-63):
   (1) Perform step c above.
   (2) Remove two each, screws, flat washers and lock washers which attach oven cover assembly (A2A5MP5, Figure 7-60) to sleeve.
   (3) Pull fine-adjust knob (A2A5MP12, Figure 7-59) from its shaft.
   (4) Lift out oven cover assembly with indicator dial (A2A5MP6, Figure 7-60) attached.
   (5) Cut lacing cord from cable (A2A5W7, Figure 7-63). Push cable into sleeve while pulling oven wiring assembly upward.

NOTE

It is not necessary to remove Oscillator and Oven Control Subassembly A2A5A1 (Figure 7-61) from Oven Body Subassembly A2A5A3 for this step.

f. To remove Oscillator and Oven Control Subassembly A2A5A1 (Figure 7-61):
   (1) Perform parts (2) through (4) of step e. above.
   (2) Pull Oscillator and Oven Control Subassembly out of Oven Body Subassembly.

g. To remove switch A2A5A2S1 (Figure 7-62):
   (1) Remove nut which attaches switch to bracket.
   (2) Unsolder and tag switch leads. Push switch downward and out.

6-81. INSPECTION. Inspect Frequency Standard Assembly A2A5 in accordance with the applicable portions of table 6-8.

6-82. REPAIR. Make necessary repairs in accordance with instructions given in paragraphs 6-15 through 6-18.

6-83. CLEANING. Clean parts and subassemblies of Frequency Standard Assembly A2A5 in accordance with applicable portions of paragraph 6-19.

6-84. REASSEMBLY. To reassemble Frequency Standard Assembly A2A5 reverse the disassembly procedure. Observe the following:

a. When inserting Oscillator and Oven Control Subassembly A2A5A1 into Oven Body Assembly A2A5A3, be sure that subassembly A2A5A1 is held in place by the nylon guides in A2A5A3, and that the contact pins on subassembly A2A5A1 mate with the contacts of A2A5A3J1 at the bottom of the Oven Body Assembly.
b. Before reattaching the fine-adjust knob to its shaft, set indicator dial to the position noted in step a.(2) of paragraph 6-80.
c. Be sure to use a nylon flat washer when attaching 5 MHz Reference Control Subassembly A2A5A4 to sleeve assembly A2A5MP2.
d. When attaching Oven Body Subassembly A2A5A3 with 5 MHz Reference Control Subassembly A2A5A4 to baseplate, be sure contacts of A2A5A4 are properly mated with connector A2A5J3.
e. If lacing cord was removed from cable A2A5W7, replace with new lacing. Do not install cover until paragraph 6-86 has been performed.

6-85. ADJUSTMENT. Perform the adjustment and alinement procedures of table 6-5. Performance of the procedures of table 6-5 satisfies the requirements for checkout.

6-86. INSTALLATION. To install Frequency Standard Assembly A2A5 into chassis assembly A2:

a. Turn captive screws counterclockwise until held by baseplate (A2A5MP1, Figure 7-60).
b. Install Frequency Standard Assembly A2A5 in the chassis assembly in the position shown in figure 1-2.
c. Assembly A2A5 to mate connector on assembly with connector on chassis assembly.

d. Secure Frequency Standard Assembly A2A5 in place with captive screws.

NOTE

After installation adjust output frequency as instructed in table 6-1, step 4 and check performance of Radio Receiver R-1051H/URR in accordance with table 5-5.

6-87. TRANSLATOR/SYHTHESIZER ASSEMBLY A2A6.

6-88. GENERAL. Translator/Synthesizer Assembly A2A6 (Figure 1-2) is repairable at depot only. Organizational repair is limited to removal and replacement of the assembly.

6-89. REMOVAL. To remove Translator/Synthesizer Assembly A2A6:

a. Loosen four captive screws one at each corner of the assembly.
b. Lift assembly gently from chassis assembly, using two of the captive screws as handles.

6-90. DISASSEMBLY. Complete disassembly involves the removal of three covers. Do not disassemble beyond what is required for access to the part to be repaired or replaced. To remove the top cover (A2A6MP3, Figure 7-65), remove thirteen screws and lift cover off. Removal of the top cover provides access to seven plug-in printed circuit subassemblies A2A6A13 through A17 and A19 and A20. Any of the plug-in subassemblies other than A2A6A15 may be removed simply by releasing its latches and pulling upward. The Power Supply Subassembly A2A6A15 can be removed by sliding it upward in its tracks and disconnecting wires at A2A6A15E1 and A2A6A15E4 - E6 (Figure 7-70). Filter Subassembly A2A6A7 (Figure 7-66) is hard wired to the A2A6 chassis. To remove the filter subassembly, first remove Power Supply Subassembly A2A6A15, then remove the two machine screws which fasten the filter subassembly from the outside at the upper rear of the A2A6 housing. Lift out the filter subassembly as far as its leads will permit. Unsolder and tag leads for identification.

6-91. TRANSLATOR SUBASSEMBLY A2A6A8 (Figure 7-67). To remove the rf translator subassembly:

a. Remove six machine screws which attach the bottom cover and remove cover.
b. Remove six machine screws which attach the side cover and remove cover.
c. Remove thirteen screws which attach the top cover (A2A6MP3, Figure 7-65) and remove cover.
d. Remove the A2A6A19 and A2A6A14 plug-in printed circuit subassemblies.
e. With the aid of rf insert extractor tool MS17806 extract the following rf inserts which terminate the rf leads from the rf translator subassembly:
   (1) A2A6A19P1A4
   (2) A2A6P2A1
   (3) A2A6P2A2
   (4) A2A6P3A2
   (5) A2A6P3A1
   (6) A2A6XA14P1A4
f. Disconnect leads at A2A6A8J4, -J5, -J6 and -J7 and also FL5-1 and FL5-J1 (Figure 7-65).
g. Remove six machine screws and washers which fasten rf translator subassembly to chassis. Carefully lift out subassembly while guiding coaxial leads through slots in chassis.

6-92. ROTARY SWITCHES. To remove any of the rotary switches A2A6S1, -S2, or -S3 (Figure 7-65):

a. Remove thirteen screws which attach the top cover (A2A6MP3, Figure 7-65) and remove cover.
b. Remove six screws which attach bottom cover to A2A6 and lift cover off.
c. Unsolder leads of flexible connector harness assembly from switch terminals.
d. Remove coupling assembly (A2A6-MP8, MP12, and MP16, Figure 7-65) from bottom of switch shaft.
e. Remove anti-turn washer, nut and lock washer from switch and remove switch.

6-93. MAIN CONNECTORS. To remove connectors A2A6P1 through A2A6P3, proceed as follows:

a. To remove A2A6P1 (Figure 7-65):
   (1) Remove A1 coaxial insert from connector.
   (2) Remove attaching hardware from connector.
   (3) Lift connector with flexible connector harness attached and unsolder leads to harness.
b. To remove A2A6P2 or A2A6P3 (Figure 7-65):
   (1) Remove coaxial inserts from connector.
   (2) Remove attaching hardware from connector and lift out. Take care not to damage ground wire soldered to flexible connector harness.

6-94. PRINTED CIRCUIT BOARD CONNECTORS. To remove any printed circuit board connector, proceed as follows:

a. Remove coaxial inserts A2A6P1A1, A2A6XA14P1A4 and A2A6XA19P1-A4.
b. Remove attaching hardware from all connectors except A2A6P3.
c. Remove coaxial insert from A2A6-XA17A2.
d. Disconnect two power leads and one coaxial lead from FL5-1, FL5-2 and FL5-J1 respectively.
e. Remove two screws, lockwashers and flatwashers securing FL5 to chassis and lift out FL5.
f. Unsolder A2A6C1 from the flex harness and lift it from its clip.
g. Unsolder flex harness from A2A6S3 (Figure 7-65).
h. Eject coaxial inserts from connector to be removed. It may be necessary to eject the insert on the opposite end of the semirigid coaxial cable. Unsolder A2A6C2 and A2A6C3 from A2A6XA19A1 and A2 if necessary.
i. Peel back flexible connector harness with connectors attached.
j. Unsolder connector to be replaced.

6-95. INSPECTION. Inspect Translator/Synthesizer Assembly A2A6 and its sub assemblies in accordance with the applicable portions of Table 6-8. Inspect the flexible connector harness for broken conductors and loose solder connections.

6-96. REPAIR. Make ncessary repairs in accordance with instructions given in paragraphs 6-15 through 6-18.

6-97. CLEANING. Clean parts and subassemblies of A2A6 in accordance with the applicable portions of paragraph 6-19.

6-98. REASSEMBLY. Except for the reattachment of rotary switch couplers, reassembly is the reverse of disassembly. To attach couplers to rotary switches, aline each coupler individually exactly as shown in figure 6-10.

6-99. ADJUSTMENT. Aline and adjust Translator/Synthesizer Assembly in accordance with table 6-6. Completion of procedures in table 6-6 provides a preliminary checkout.

6-100. INSTALLATION. To install Translator/Synthesizer Assembly A2A6 into the chassis assembly:

a. Set frequency controls for 00.000 MHz.
b. Position couplers on rotary switches so that pins on all three are toward the rear of translator/synthesizer.
c. Set translator/synthesizer assembly gently into place and fasten with four corner captive screws.
d. Rotate kHz controls from 000 through 999 to check proper mating of couplers.
e. Checkout of the A2A6 installation may be completed by following the procedures of table 4-13.

NOTE

After installation, slide chassis assembly into case and fasten with front panel screws. Check performance of Radio Receiver R-1051H/URR in accordance with table 5-5.

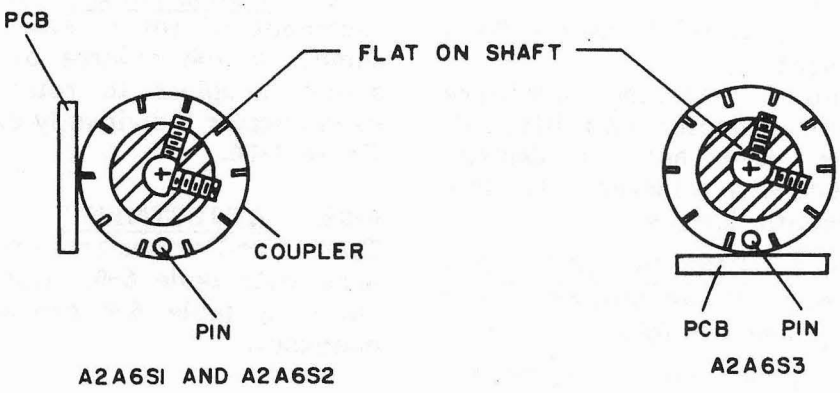

Figure 6-10. Switch and Coupling Orientation

6-101. CODE GENERATOR ASSEMBLY A2A7.

6-102. GENERAL. Code Generator Assembly A2A7 (Figure 7-75) is repairable at depot only; organizational level corrective action is limited to removal and replacement of A2A7. It should be noted that the assembly is identical to the code generator used in Radio Transmitter T-827J/URT. However, in Radio Receiver R-1051H/URR pins 8 and 10 through 20 of A2J8, the mating connector for A2A7P1, are not connected.

6-103. REMOVAL. The location of the code generator assembly is shown in figure 1-3. To remove Code Generator Assembly A2A7 from Chassis Assembly A2, proceed in accordance with the following:

a. Set MODE SELECTOR Switch A2-A14S2 to OFF and disable primary power at bulkhead distribution point.
b. Loosen six captive screws on front panel and slide chassis assembly from case until slides lock.
c. Remove RF Amplifier Assembly A2-A4 from chassis assembly.
d. Loosen captive screw (A2A7MP10, Figure 7-75) at rear of code generator assembly.

CAUTION

Hand guide cable at rear of chassis assembly over front edge of case when tilting chassis assembly to vertical position.

e. Release tilt latches and tilt chassis assembly up to expose bottom. Be sure latches engage at 90 degree position.
f. Disconnect A2A7P1 from A2J8.
g. Remove the remaining two screws which fasten the code generator assembly to the front panel mounting spacers.
h. Gently and carefully push the code generator assembly toward rear of chassis assembly to disengage its couplers from the MHz frequency controls on the front panel.
i. Carefully work the assembly out of the chassis assembly.

6-104. INSPECTION. Inspect the code generator assembly in accordance with the applicable portions of table 6-8.

6-105. CLEANING. Refer to paragraph 6-19 for cleaning methods and materials.

6-106. INSTALLATION AND ALINEMENT. To install and aline Code Generator Assembly A2A7, proceed in accordance with the following:

a. Position the MHz control knobs and the couplers on the code generator so that the pins on the knob couplers will engage the slots on the switch couplers when the code generator is installed.

CAUTION

Do not damage flex harness during installation.

b. Carefully work the code generator assembly into position to engage couplers.
c. Attach code generator and spacers to chassis assembly with mounting hardware originally removed or loosened.
d. Connect plug A2A7P1 to A2J8 on chassis assembly.
e. Set MHz controls on front panel to 07 MHz.
f. On rear of Code Generator Assembly A2A7, note the position of the rotor contacts with respect to the gold pad contacts on the units MHz switch. Note the position of the rotor contact, relative to the gold pad contacts for the 10 MHz switch, by observing the rear, side edge of the center A2A7 printed circuit board. If the units MHz switch rotor contact or the 10 MHz switch rotor contact is not centered on the gold pad contact, realine using the following procedure:
(1) Loosen the two flat-head cross recessed screws on detent

spring A2A14MP24 or A2A14-MP25 as appropriate (Figure 7-79).

(2) While depressing the roller end of the spring with one finger (to keep it at the bottom of the detent wheel) rotate the frequency control knobs until the rotor contact is centered on the gold pad contact.

(3) While continuing the finger pressure on the roller end of the spring, tighten the two flathead cross recessed screws.

g. To check the A2A7 installation, first perform the mechanical synchronization check of table 4-8. Upon satisfactory completion, perform the applicable portions of the maintenance turn-on procedure of table 5-5, depending on previous receiver operating condition (may skip to step 4, only, if rest of receiver had been operating properly).

6-107. ANTENNA OVERLOAD ASSEMBLY A2A9.

6-108. GENERAL. The antenna overload assembly (Figure 1-3) is repairable at organizational level. Repair and removal instructions for this hard wired assembly are supplied in paragraphs 6-15 through 6-18 and 6-34(a.).

6-109. 20 MHz AND 30 MHz FILTER ASSEMBLY A2A10.

6-110. GENERAL. The 20 MHz and 30 MHz filter assembly (Figure 1-3) is repairable at organizational level. Repair and removal instructions for this hard wired assembly are supplied in paragraphs 6-15 through 6-18 and 6-34(b.).

6-111. CONTROL ASSEMBLY A2A13.

6-112. GENERAL. The receiver control assembly (Figure 1-3) is repairable at organizational level. Repair and removal instructions for this assembly are supplied in paragraphs 6-15 through 6-18 and 6-34(c.).

6-113. ADJUSTMENT. Reconnect input power to AC PWR IN connector A1A1J3. Perform the adjustment procedures of table 6-7. Performance of table 6-7 adjustments satisfies the requirement for checkout.

6-114. Hz CONTROL AND VERNIER SUBASSEMBLY A2A14A11.

6-115. GENERAL. The Hz Control and Vernier Subassembly A2A14A11 (Figure 1-2) is repairable at organizational level. Repair and removal instructions for this hard wired subassembly are supplied in paragraphs 6-15 through 6-18 and 6-34(d.) through 6-34(g.).

6-116. METER DRIVER SUBASSEMBLY A2A14A12.

6-117. GENERAL. The Meter Driver Subassembly A2A14A12 (Figure 1-2) is repairable at organizational level. Repair and removal instructions for this subassembly are supplied in paragraphs 6-15 through 6-18 and 6-34(h.).

6-118. MOUNTING BASE ASSEMBLY MT-3114A/UR.

6-119. GENERAL. Repair of Mounting Base Assembly MT3114A/UR may be made at organizational level.

6-120. REMOVAL. The mounting base assembly may be removed from Radio Receiver R-1051H/URR by unscrewing four pan head screws each from left and right mounting brackets 3MP15 and 3MP16 respectively, and lifting receiver from base (Figure 8-2).

6-121. DISASSEMBLY. Disassemble the mounting base assembly only to the extent necessary to gain access to a part requiring replacement. The replaceable parts are illustrated in figures 7-84 and 8-2. For more detailed parts information see the parts list, table 7-2.

a. With the assembly placed on a work bench, remove the three screws securing each mounting bracket to top plate MP2 of the assembly, and set brackets and hardware aside.

b. Remove the four screws securing each isolator MP3 through MP6 to the top plate, and also the screws securing ground strap clips MP11

through MP14 and captive straps MP7 through MP10 to the top plate. Set top plate aside.

c. To complete the disassembly invert bottom plate MP1 with its attached parts, and remove screws securing MP3 through MP14 to the bottom plate. When setting parts aside note position of isolator MP6 so that it can be returned to its original position below the left rear corner of the receiver.

6-122. REASSEMBLY. Reassembly of the mounting base consists of reversal of the disassembly procedures of paragraph 6-121. Reinstallation of the Radio Receiver R-1051H/URR onto Mounting Base Assembly MT3114A/URR consists in reversal of the procedures of paragraph 6-120. Checkout of this assembly is achieved by observing that its performance lies within the limitations indicated for it in figure 8-2, sheet 1.

CHAPTER 7

PARTS LIST

7-1. INTRODUCTION.

7-2. LIST OF ASSEMBLIES. Table 7-1 is a listing of the assemblies included in Radio Receiver R-1051H/URR. These are listed by reference designations in numerical order. Thus, when the complete reference designation of a part is known, this table will furnish the identification of the assembly in which the part is located, since the first number of a complete reference designation identifies the unit. Table 7-1 also provides the following information for each assembly listed: (1) official name, (2) designation, and (3) location of the first page of its parts listing in table 7-2.

7-3. REFERENCE DESIGNATIONS. The numbering method of assigning reference designations has been used to identify assemblies, subassemblies, and parts. This method has been expanded as necessary to cover adequately the various degrees of subdivision of the equipment. Examples of this numbering method and typical expansions of the same are illustrated by the following:

a. Example 1:



Read as: First (1) resistor (R) of first (1) assembly (A).

b. Example 2:

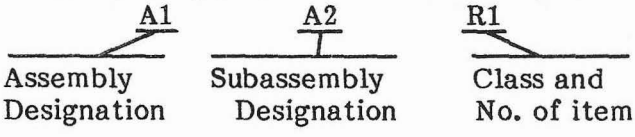

Read as: First (1) resistor (R) of second (2) subassembly (A) of first (1) assembly (A).

7-4. Partial reference designations are used on the equipment and illustrations. The partial reference designations consist of the class letter(s) and the identifying item number. The complete reference designations may be obtained by placing the proper prefix before the partial reference designations. Prefixes are provided on illustrations following the notation "REF DESIG PREFIX."

7-5. MAINTENANCE PARTS LISTING.

7-6. PARTS LIST. Table 7-2 lists all assemblies and their maintenance parts, in numerical sequence by reference designation. Maintenance parts for each assembly are listed alphanumerically by class of part following the assembly designation. Thus, the parts for each assembly are grouped together. Table 7-2 provides the following information: (1) complete reference designations of each assembly, subassembly, and part, (2) reference to explanatory notes, (3) noun name and brief description, and (4) identification of the parts location which pictorially locates the part.

a. Column 1, Reference Designation. The parts list is divided and arranged by major assemblies in numerical sequence (e.g., assembly A1 with its subassemblies, parts, etc., precedes assembly A2 with its parts). All parts attached to the assembly are listed first in alphanumerical order, followed by subassemblies with parts, and additional subassemblies with parts, also listed in alphanumerical order, as follows:

Assembly	A1
(Assembly	A1A1
parts)	A1B1
	A1C1
	A1CR1
	A1R1
	Etc.
Subassembly	A1A1
(Subassembly	A1A1A1
parts)	A1A1B1

A1A1C1
A1A1CR1
A1A1R1
Etc.

b. Column 2, Notes. Parts variations within each article are identified by a number symbol in the Notes column of table 7-2. The absence of a number symbol in the Notes column indicates that the part is used on all articles covered by this technical manual. Note 1 is defined as a selected value (one only from A, B, C etc.) at assembly. Note 2 indicates a part (such as a cable) which is not called out or not shown on the parts location diagram. An asterisk (*) in the Notes column indicates a preferred part, unless specified otherwise at the bottom of the page.

c. Column 3, Name and Description. This column contains the name, including descriptive data and military type number of the item. Those parts not having a military type number include physical characteristics. Identical parts used more than five times are referenced to the List of Common Item Descriptions (Table 7-3). Following the description are the manufacturer's part number and the contractor's part number. Where only a single manufacturer is indicated, the part number is normally just the manufacturer's drawing number, although both numbers are in some cases provided. Where a second manufacturer, or vendor, is also involved, that firm's drawing number for the part is provided following the firm's identification code number (Paragraph 7-9). Attaching hardware with quantity is identified by the assigned letter code; e.g. C(4) would be the third listed piece of attaching hardware in which four pieces are used.

d. Column 4, Figure Reference Number. This column lists the figure number of the parts location illustration (located at the end of the chapter), which shows the physical location of the part.

7-7. LIST OF COMMON ITEM DESCRIPTIONS. Table 7-3 contains the description of all multiple use parts (over five applications). These descriptions (referenced by item number in table 7-2) contain the same information as corresponding part descriptions in column 3 of table 7-2.

7-8. LIST OF ATTACHING HARDWARE. Table 7-4 contains a list of standard attaching hardware used in five or more applications.

7-9. LIST OF MANUFACTURERS. Table 7-5 contains the name, address, and code number of all manufacturers supplying items for equipment as referenced in the parts list. This list is in numerical sequence by code number. Code numbers are in accordance with handbooks H4-1 and H4-2.

7-10. PARTS LOCATION ILLUSTRATIONS.

7-11. Parts location illustrations (Figures 7-1 through 7-84) are located at the end of this chapter. Their purpose is to provide positive and rapid location of parts. Column 4 of table 7-2 references the appropriate illustration which pictorially locates the part in the equipment.

Table 7-1. Radio Receiver R-1051H/URR, List of Major Assemblies

REFERENCE DESIGNATION	NAME OF UNIT OR ASSEMBLY	PAGE NUMBER
1	Receiver, Radio R-1051H/URR	
A1	Receiver Case	
A1A1	Filter Box Assembly	
A1A2	Interlock Switch Assembly	
A2	Chassis Assembly	
A2A1	Receiver Mode Selector Assembly	
A2A2	IF/Audio Amplifier Assembly	
A2A3	IF/Audio Amplifier Assembly	
A2A4	Rf Amplifier Assembly	
A2A5	Frequency Standard Assembly	
A2A6	Translator/Synthesizer Assembly	
A2A7	Control Generator Assembly	
A2A8	Not used	
A2A9	Antenna Overload Assembly	
A2A10	20- and 30- MHz Filter Assembly	
A2A11	Not used	
A2A12	Not used	
A2A13	Control Assembly	
A2A14	Front Panel Assembly	
A2A14A11	Vernier Switch Subassembly	
A2A14A12	Meter Driver Subassembly	
2	Mating Connector Kit	
3	Mounting Base Assembly	

Table 7-2. Radio Receiver R-1051H/URR, Part List

RADIO RECEIVER, R-1051H/URR

REFERENCE DESIGNATION	NOTES	NAME AND DESCRIPTION	FIGURE NUMBER
1		RECEIVER, RADIO R-1051H/URR: Mfr 98738, part no. 01A229000-01.	7-1
RECEIVER CASE A1			
A1		RECEIVER CASE: Mfr 98738, part no. 01A229065-01. (Attaching Parts) FC(2) FD(2) DY(3) M(1)	7-1
A1E1		TERMINAL, LUG: 0.688 in. long, 0.266 in. w, mfr 06845, part no. 4021198-0701.	7-1
A1J1 thru A1J22		Not used.	
A1J23		CONNECTOR, RECEPTACLE, ELECTRICAL: 1 contact, coaxial, 0.812 in. dia, 1.62 in. thk; mfr 95712, part no. 33417, 06845, dwg 4030755-0701. (Attaching Parts) AX(1)	7-1
A1J24		CONNECTOR, RECEPTACLE, ELECTRICAL: 1 contact, coaxial, 0.687 in. long, 0.687 in. w, 1.250 in. thk; mfr 91737, part no. 15808, 06845, dwg 4030754-0703. (Attaching Parts) FE(1)	7-1
A1J25		CONNECTOR, RECEPTACLE, ELECTRICAL: 1 contact, coaxial, 0.812 in. dia, 1.625 in. thk; mfr 95712, part no. 33417, 06845, dwg no. 4030755-0701. (Attaching Parts) AX(1)	7-1
A1MP1		CAP, CONNECTOR: For J24; MIL type M39012/25-0006. (Attaching Parts) M(1) DY(1)	7-1
A1MP2		CAP, CONNECTOR: For J25; MIL type M39012/25-0012.	7-1
A1MP3		SLIDE, RIGHT HAND: Mfr 05236, part no. 120966R, 06845, dwg 4032393-0702. (Attaching Parts) B(4) C(4)	7-1
A1MP4		SLIDE, LEFT HAND: Mfr 05236, part no. 120966L, 06845, dwg 4032393-0701. (Attaching Parts) B(4) C(4)	7-1
A1MP5 thru A1MP8		BRACKET, SLIDE: 6.26 in. long, 2.00 in. w; mfr 06845, part no. 4032497-0501. (Attaching Parts) B(8) C(8) D(8) and FC or FD as required	7-1
A1MP9 thru A1MP18		Not used.	

Table 7-2. Radio Receiver R-1051H/URR, Parts List (Continued)

RECEIVER CASE A1

REFERENCE DESIGNATION	NOTES	NAME AND DESCRIPTION	FIGURE NUMBER
A1MP19		GASKET: Woven aluminum; 4.30 in. long, 3.90 in. w, 0.004 in. thk; mfr 98738, part no. 32P226210-21-11.	7-1
A1MP20		CHANNEL, CABLE: 10.50 in. long, 0.22 in. w; mfr 06845, part no. 4031942-0001. (Attaching Parts) K(3) L(3) M(3)	7-1
A1MP21		STRAP, RETAINING: Annealed stainless steel; 1.833 in. long, 0.500 in. w; 0.312 in. dia; mfr 84971, part no. TA515SS5-10, 06845, dwg 4032173-0701. (Attaching Parts) A(2) B(2)	7-1
A1MP22 and A1MP23		PIN, LOCATING: 1.08 in. long, 1.09 in. w; mfr 98738, part no. 22P226777-21-11. (Attaching Parts) N(2) P(2) Q(2) BA(2)	7-1
A1MP24 thru A1MP30		CLAMP, LOOP: Polyamide (nylon); 0.810 in. long, 0.375 in. w, 0.312 in. dia. loop; mfr 09922, part no. HP5N; 06845, dwg 4032230-0704. (Attaching Parts) A(5) B(5) H(5)	7-1
A1MP31 thru A1MP35		CLAMP, LOOP: Polyamide (nylon); 0.927 in. long, 0.375 in. w, 0.380 in. dia. loop; mfr 09922, part no.HP6N, 06845, dwg 4032230-0705. (Attaching Parts) A(5) B(5) H(5)	7-1
A1MP36		CLAMP, LOOP: Polyamide (nylon); 0.800 in. long, 0.375 in. w, 0.250 in. dia. loop; mfr 09922, part no. HP4N, 06845, dwg 4032230-0703. (Attaching Parts) K(1) L(1) M(1)	7-1
A1MP37		BRACKET ASSEMBLY: 7.40 in. long, 0.88 in. w; mfr 98738, part no. 07P228853-01 (Attaching Parts) H(3) R(3) B(3)	7-1
A1P1		CONNECTOR, RECEPTACLE, ELECTRICAL: MIL type M24308/1-5. (Attaching Parts) S(2) T(2)	7-1
A1P2		CONNECTOR, RECEPTACLE, ELECTRICAL: 3 coaxial contacts, pin insert; 1.213 in. long, 0.494 in. w, 0.641 in. thk; mfr 71785, part no. DAMMF3W3S, 06845, dwg 4032484-0704. (Attaching Parts) S(2) T(1) F(1) U(1)	7-1
A1P2A1 thru A1P2A3		CONNECTOR, PLUG, ELECTRICAL: Item 27.	7-1
A1W1		CABLE ASSEMBLY: 60.0 in. long; mfr 98738, part no. 30A2266483-21-11 (with connectors installed both ends, including A1J24 AND A1P2A1).	7-1
A1W2		CABLE ASSEMBLY: 60.0 in. long, mfr 98738, part no. 30A226483-22-11 (with connectors installed both ends, including A1J23 andA1P2A3).	7-1

Table 7-2. Radio Receiver R-1051H/URR, Parts List (Continued)

RECEIVER CASE A1

REFERENCE DESIGNATION	NOTES	NAME AND DESCRIPTION	FIGURE NUMBER
A1W3		CABLE ASSEMBLY: 60.0 in. long; mfr 98738, part no. 30A226483-23-11 (with connectors installed both ends, including A1J25 and A1P2A2).	7-1
A1A1		FILTER BOX ASSEMBLY: 4.56 in. long, 4.38 in. w, 0.820 in. thk; mfr 98738, part no 01A228812-01 (Attaching Parts) AV(2) AW(2) AX(2) AY(2)	7-1 and 7-2
A1A1C1 thru A1A1C15		CAPACITOR, FIXED, CERAMIC: 1000 pF ±20%, 500 Vdc working; MIL type CK70AW102M.	7-2
A1A1E1		TERMINAL, STUD: MIL type SE12XC07.	7-2
A1A1E2		TERMINAL, LUG: 0.796 in. long, 0.375 in. w, 0.020 in. thk; mfr 79963, part no. 29-1-4, 98738, dwg 29S111221-8.	7-2
A1A1J1 and A1A1J2		Not used.	
A1A1J3		CONNECTOR, RECEPTACLE, ELECTRICAL: 3 contacts, pin insert; 1.375 in. long, 1.375 in. w, 0.986 in. thk; mfr 77820, part no. 71-74116-5P, 98738, dwg 09P228579-03. (Attaching Parts) AQ(1) AL(1) AU(1) AZ(1)	7-1/7-2
A1A1J4		CONNECTOR, RECEPTACLE, ELECTRICAL: 12 contacts, pin insert; MIL type MS3114E14-12P.	7-1/7-2
A1A1J5 and A1A1J6		CONNECTOR, RECEPTACLE, ELECTRICAL: 2 contacts, pin insert; 1.000 in. long, 1.000 in. w, 0.968 in. thk; mfr 77820, part no. 71-74111-4P, 98738, dwg 09P228579-01 (Attaching Parts) AQ(2) AL(20) AU(2) AZ(2)	7-1/7-2
A1A1MP1		COVER: 4.50 in. long, 4.32 in. w; mfr 98738, part no. 15P226667-23-11. (Attaching Parts) V(12)	7-2
A1A1A1		TRANSIENT SUPPRESSION ASSEMBLY: 1.75 in. long, 1.68 in. w; mfr 98738, part no. 01A228787-01. (Attaching Parts) AQ(1) AL(1) AU(1) AZ(1)	7-2
A1A1A1RV1 thru A1A1A1RV3		RESISTOR, VARIABLE: Metal oxide; mfr 25088, part no. SK14130, 98738, dwg 06P228822-01.	7-2
A1A2		SWITCH, INTERLOCK ASSEMBLY: Mfr 98738, part no. 01A226212-21-11. (Attaching Parts) A(2) H(2) B(2)	7-3
A1A2MP1 thru A1A2MP8		Not used.	

Table 7-2. Radio Receiver R-1051H/URR, Parts List

RECEIVER CASE A1

REFERENCE DESIGNATION	NOTES	NAME AND DESCRIPTION	FIGURE NUMBER
A1A2MP9		SHAFT, INTERLOCK: 7.59 in. long, 0.187 in. dia; mfr 06845, part no. 4031910-0001.	7-3
A1A2MP10		SPRING, COMPRESSION: 0.268 in. OD, 0.218 in. ID, 1.25 in. long; mfr 06845, part no. 4031911-0001.	7-3
A1A2MP11		Not used.	
A1A2MP12		ADAPTER, SWITCH ACTUATOR: Mfr 91929, part no. JS31, 06845, dwg 4031919-0701. (Attaching Parts) E(2) F(2) G(2)	7-3
A1A2MP13		PIN, SPRING: MIL type MS171439.	7-3
A1A2MP14		Not used.	
A1A2MP15		BRACKET, INTERLOCK: 1.22 in. long, 0.62 in. w; mfr 98738, part no. 15P226213-21-11	7-3
A1A2MP16		BLOCK, STOP: 0.600 in. long, 0.63 in. w; mfr 06845, part no. 4010049-0001. (Attaching Parts) EN(2)	7-3
A1A2MP17		PLATE, RETAINER: 0.76 in. long, 0.50 in. w; mfr 06845, part no. 4031912-0001.	7-3
A1A2MP18		RING, RETAINING: MIL type MS16633-4018.	7-3
A1A2S1A and A1A2S1B		SWITCH: MIL type MS 25085-2, per MIL-S-8805/2.	7-3

Table 7-2. Radio Receiver R-1051H/URR, Parts List (Continued)

CHASSIS ASSEMBLY A2

REFERENCE DESIGNATION	NOTES	NAME AND DESCRIPTION	FIGURE NUMBER
A2		CHASSIS ASSEMBLY, RECEIVER: Mfr 98738, part no. 01A229008-01. (Attaching Parts) BU(2) BM(2) FH(9) Z(1) Y(5) AA(6) BV(4) AM(4) AN(4) FG(4)	7-4
A2C1		CAPACITOR, FIXED, ELECTROLYTIC: 330 uF uF±5%, +150 V working; 3.000 in. long, 1.500 in. dia; MIL type CE51C331J. (Attaching Parts) B(1) W(1) H(1) X(1) AY(2)	7-4B
A2C2		CAPACITOR, FIXED, ELECTROLYTIC: 470 uF, +75, -10%, +100 V working; 3.000 in. long, 1.500 in. dia; MIL type CE51C471H. (Attaching Parts) B(1) W(1) AY(2)	7-4B
A2C3		Not used.	
A2C4		CAPACITOR: Item 18.	7-4B
A2C5		CAPACITOR: Item 11.	7-4B
A2CR1 thru A2CR8		Not used.	
A2CR9		SEMICONDUCTOR DEVICE, DIODE: Rectifier bridge, MIL type M19500/469-01. (Attaching Parts) A(1)	7-4B
A2CR10		SEMICONDUCTOR DEVICE, DIODE: MIL type JAN1N5550.	7-4A
A2E1 thru A2E6		Not used.	
A2E7		TERMINAL, STUD: Item 63. (Attaching Parts) AA(1)	7-4A
A2E8		TERMINAL, STUD: Item 62. (Attaching Parts) AA(1)	7-4A
A2E9		TERMINAL, STUD: Item 66. (Attaching Parts) AA(1)	7-4A
A2E10		TERMINAL, LUG: MIL type MS77068-1 (Attaching Parts) G(1)	7-4A
A2E11 and A2E12		TERMINAL, STUD: Item 62. (Attaching Parts) AA(1) AQ(1)	7-4A
A2E13		TERMINAL, STUD: Item 62. (Attaching Parts) AA(1)	7-4A
A2E14		Not used.	
A2E15 thru A2E18		TERMINAL, STUD: Item 62.	7-4A
A2E19 and A2E19A		TERMINAL, LUG: MIL type 77068-1. (Attaching Parts) AF(1) AG(1)	7-4A
A2E20		TERMINAL, STUD: Item 62. (Attaching Parts) AA(1)	7-4A
A2E21		TERMINAL, STUD: Item 66. (Attaching Parts) AA(1)	7-4A

Table 7-2. Radio Receiver R-1051H/URR, Parts List (Continued)

CHASSIS ASSEMBLY A2

REFERENCE DESIGNATION	NOTES	NAME AND DESCRIPTION	FIGURE NUMBER
A2E22 and A2E23		TERMINAL, STUD: Item 62. (Attaching Parts) AA(1)	7-4A
A2E24		Not Used.	
A2E25		TERMINAL, STUD: Item 63. (Attaching Parts) AA(1)	7-4A
A2E26		TERMINAL, STUD: Item 62. (Attaching Parts) AA(1)	7-4A
A2E27		TERMINAL, STUD: Item 63. (Attaching Parts) AA(1)	7-4A
A2E28		TERMINAL, STUD: Item 66. (Attaching Parts) AA(1)	7-4A
A2E29 and A2E30		TERMINAL, STUD: Item 62. (Attaching Parts) AA(1)	7-4A
A2E31		TERMINAL, STUD: Item 66. (Attaching Parts) AA(1)	7-4A
A2E32		TERMINAL, STUD: Item 62. (Attaching Parts) AA(1)	7-4A
A2E33 and A2E34		TERMINAL, STUD: Item 62. (Attaching Parts) AA(1)	7-4A
A2E35		TERMINAL, STUD: Item 63. (Attaching Parts) AA(1)	7-4A
A2E36 and A2E37		TERMINAL, STUD: Item 62. (Attaching Parts) AA(1)	7-4A
A2E38 and A2E39		TERMINAL, STUD: Item 66. (Attaching Parts) AA(1)	7-4A
A2E40 and A2E41		TERMINAL, STUD: Item 63. (Attaching Parts) AA(1)	7-4A
A2E42		TERMINAL, STUD: Item 66. (Attaching Parts) AA(1)	7-4A
A2E43 and A2E44		TERMINAL, STUD: Item 62. (Attaching Parts AA(1)	7-4A
A2E45		TERMINAL, LUG: MIL type MS35431-4.	7-4A
A2E46		TERMINAL, LUG: MIL type MS77068-2.	7-4A
A2E47 and A2E48		Not used.	
A2E49		TERMINAL, LUG: MIL type MS77068-1. (Attaching Parts) A2E44.	7-4A
A2E50 thru A2E52		Not used.	
A2E53		TERMINAL, LUG: Mfr 06845, part no. 4021198-0701. (Attaching Parts) AA(1) AJ(1) AK(1)	7-4A
A2FL1 and A2FL2		FILTER, RFI: 60 Hz, 0.670 in. dia, 1.250 in. long; mfr 56289, part no. 1JX97, 06845, dwg 4032365-0701.	7-4A

Table 7-2. Radio Receiver R-1051H/URR, Parts List (Continued)

CHASSIS ASSEMBLY A2

REFERENCE DESIGNATION	NOTES	NAME AND DESCRIPTION	FIGURE NUMBER
A2FL3		FILTER, LOW PASS, 30 MHz: 1.50 in. long, 0.50 in. w, 0.75 in. thk; mfr 98738, part no. 01A228298-01. (Attaching Parts) AD(2) or AG(2), AL(2)	7-4A
A2FL3MP1	2	FERRULE, GROUNDING: 0.45 in. long, 0.80 in. dia; mfr 08795, part no. D-144-34, 06845, dwg 4017497-0703.	7-4A
A2FL3P1		CONNECTOR, PLUG, ELECTRICAL: P/O A2W33: Right angle, coaxial, 0.734 in. long, make contact; mfr 71785, part no. 318-11-99-285, 96845, dwg 4032484-0731.	7-4B
A2J1 thru A2J7		Not used.	
A2J8		CONNECTOR, RECEPTACLE, ELECTRICAL: MIL type M24308/1-3. (Attaching Parts) AJ(2)	7-4B
A2J9 thru A2J20		Not used.	
A2J21		CONNECTOR, RECEPTACLE, ELECTRICAL: 1.541 in. long, 0.494 in. w, 0.641 in. thk; mfr 71785, part no. DDMAM50P, 06845, dwg 4032279-0703. (Attaching Parts) AJ(2) AK(2)	7-4B
A2J22		CONNECTOR, RECEPTACLE, ELECTRICAL: 1.541 in. long, 0.494 in. w, 0.422 in. h; mfr 71785, part no. DAMM3W3P, 06845, dwg 4032484-0701. (Attaching Parts) AJ(2) AK(2)	7-4B
A2J22A1 thru A2J22A3		CONNECTOR, PLUG, ELECTRICAL: Right angle coaxial; 0.734 in. long, 0.492 in. w; mfr 71785, part no. 318-11-99-285, 06845, dwg 4032484-0731.	7-4B
A2J23 and A2J24		CONNECTOR, RECEPTACLE, ELECTRICAL: MIL type M24308/1-5.	7-4B
A2L1		REACTOR: 15H, 175 V, 2.625 in. long, 1.688 in. w, 4.500 in. h; mfr 96256, part no. T57279, 06845, dwg 4032364-0701. (Attaching Parts) AM(4) AN(4)	7-4S
A2L2		REACTOR: 400 mH, 140 V, 4.125 in. long, 2.500 in. w, 4.375 in. h; mfr 93928, part no. 16300-1, 06845 dwg 4030645-0701. (Attaching Parts) AM(4) AN(4)	7-4S
A2L3		COIL, RF: MIL type MS75089-4.	7-4B
A2MP1 and A2MP2		BRACKET, CONNECTOR: 2.65 in. long, 0.50 in. w, 1.00 deep; mfr 98738, part no. 07P228777-01.	7-4S
A2MP3 and A2MP4		RETAINER, SLIDE LOCK: 2.814 in. long, 0.609 in. w, 0.144 in. thk; mfr 71468, part no. DD51223-1, 98738, dwg 01P228683-05.	7-4A, B

Table 7-2. Radio Receiver R-1051H/URR, Parts List (Continued)

CHASSIS ASSEMBLY A2

REFERENCE DESIGNATION	NOTES	NAME AND DESCRIPTION	FIGURE NUMBER
A2MP5 thru A2MP13		Not used.	
A2MP14		SPROCKET ASSEMBLY, TRIPLE: Mfr 98738, part no. 01A228308-01. (Attaching Parts) A(4) B(4)	7-4/7-5
A2MP14A		BRACKET, SPROCKET: Mfr 06845, part no. 4032198-0001.	7-5
A2MP14B thru A2MP14G		BEARING, SLEEVE: 0.460 in. dia, 0.140 in. thk, sintered metal; mfr 06845, part no. 2031154-0002.	7-5
A2MP14H thru A2MP14J		SPROCKET, WHEEL: 30 teeth, 1.463 in. dia, 0.094 in. thk; mfr 06845, part no. 4030801-0701.	7-5
A2MP14K thru A2MP14M		DISK, COUPLING: 0.875 in. dia, 0.390 in. thk; mfr 06845, part no. 4030895-0001.	7-5
A2MP14N, A2MP14P and A2MP14Q		WASHER, SPRING, TENSION: 0.568 in. dia, 0.200 in. hole dia; mfr 78189, part no. 3502-10-53-0544B, 06845, dwg 4032104-0703.	7-5
A2MP14R thru A2MP14W		RING, RETAINING: MIL type MS16633-4018.	7-5
A2MP14X and A2MP14Y		SHAFT, COUPLING: 1.115 in. long, 0.187 in. dia, mfr 06845, part no. 4032196-0501.	7-5
A2MP14Z thru A2MP14AB		RING, RETAINING: MIL type MS16624-1039.	7-5
A2MP14AC and A2MP14AC1		CLAMP, SPROCKET: 0.436 in. long, 0.234 in. w, 0.59 in. h; mfr 98738, part no. 42P228365-01. (Attaching Parts) FN(1)	7-5
A2MP14AD and A2MP14AD1		CLAMP, SPROCKET: 0.43 in. long, 0.23 in. w; 0.59 in. h; mfr 98738, part no. 42P228365-01. (Attaching Parts) FN(1)	7-5
A2MP14AE and A2MP14AE1		CLAMP, SPROCKET: 0.436 in. long, 0.234 in. w, 0.59 in. h; mfr 98738, part no. 42P228365-01. (Attaching Parts) FN(1)	7-5
A2MP14AF		SHAFT, COUPLING: 0.1874 in. dia, 1.38 in. long; mfr 06845, part no. 4032197-0501.	7-5
A2MP14AG thru A2MP14AL		WASHER, FLAT: 0.620 in. dia; 0.193 in. ID, 0.011 in. thk; mfr 06845, part no. 4032136-0001	7-5
A2MP14AM thru A2MP14AP		SHIM, STEEL: 0.380 in. dia, 0.20 in. ID, 0.011 in. thk; mfr 06845, part no. 2074903-3404.	7-6

Table 7-2. Radio Receiver R-1051H/URR, Parts List (Continued)

CHASSIS ASSEMBLY A2

REFERENCE DESIGNATION	NOTES	NAME AND DESCRIPTION	FIGURE NUMBER
A2MP15		DUAL SPROCKET ASSEMBLY: Mfr 98738, part no. 01A228273-01. (Attaching Parts) B(4) C(4)	7-4/7-6
A2MP15A		BRACKET, SPROCKET: Mfr 06845, part no. 4030872-0501.	7-6
A2MP15B and A2MP15C		SHAFT, COUPLING: 1.38 in. long, 0.1874 in. dia; mfr 06845, part no. 4032197-0501.	7-6
A2MP15D and A2MP15E		SPROCKET, WHEEL: 30 teeth, 1.463 in. dia, 0.281 in. thk; mfr 06845, part no. 4030777-0701. (Attaching Parts) FL(2) AL(2) AU(2)	7-6
A2MP15F and A2MP15G		WASHER, SPRING, TENSION: 0.568 in. dia, 0.200 in. hole dia; mfr 78189, part no. 3502-10-53-0544B, 06845, dwg 4032104-0703.	7-6
A2MP15H and A2MP15J thru A2MP15L		BEARING, SLEEVE: 0.460 in. dia, 0.390 in. thk; mfr 06845, part no. 2031154-0002.	7-6
A2MP15M and A2MP15N		DISK COUPLING: 0.875 in. dia., 0.390 in. thk; mfr 06845, part no. 4030895-0001.	7-6
A2MP15P thru A2MP15S		SPACER: 0.188 in. OD, 0.120 in. ID, 0.312 in. long; mfr 06845, part no. 4030905-0001.	7-6
A2MP15T and A2MP15U		BEARING, ROLLER, NEEDLE: 0.34 in. OD, 0.19 in. ID, 0.25 in. thk; mfr 60380, part no. B34, 06845, dwg 4032157-0701.	7-6
A2MP15V and A2MP15W		PIN, ROLLER: 0.1875 in. dia, 0.400 in. long, mfr 06845, part no. 4032132-0002.	7-6
A2MP15X and A2MP15Y		ARM: Copper, nickle plated, 2.14 in. long, 0.300 in. w, 0.500 in. thk; mfr 06845, part no. 4030879-0001.	7-6
A2MP15Z and A2MP15AA		WHEEL, INDEX: 1.500 in. dia, 0.062 in. thk; mfr 06845, part no. 4032201-0001. (Attaching Parts) AL(2) AT(2) See A2MP15P	7-6
A2MP15AB and A2MP15AC		Not used.	
A2MP15AD and A2MP15AD1		CLAMP, SPROCKET: 0.436 in. long, 0.235 in. w, 0.59 in. h; mfr 98738, part no. 42P228365-01. (Attaching Parts) FN(1)	7-6
A2MP15AE and A2MP15AE1		CLAMP, SPROCKET: 0.436 in. long, 0.235 in. w, 0.59 in. h; mfr 98738, part no. 42P228365-01. (Attaching Parts) FN(1)	7-6
A2MP15AF and A2MP15AG		PLATE: 1.68 in. long, 0.250 in. w; mfr 06845, part no. 4032110-0001. (Attaching Parts) AQ(1)	7-6

Table 7-2. Radio Receiver R-1051H/URR, Parts List (Continued)

CHASSIS ASSEMBLY A2

REFERENCE DESIGNATION	NOTES	NAME AND DESCRIPTION	FIGURE NUMBER
A2MP15AH and A2MP15AJ		SPACER: 0.48 in. long, 0.30 in. w, 0.062 in. thk; mfr 06845, part no. 4032143-0001. (Attaching Parts) AS(1) on A2MP15AJ; FM(1) on A2MP15AH, A2MP15AJ, and A2MP15AK.	7-6
A2MP15AK and A2MP15AL		SPACER: 0.48 in. long, 0.30 in. w, 0.016 in. thk; mfr 06845, part no. 4032143-0002.	7-6
A2MP15AM and A2MP15AN		SPACER: 0.48 in. long, 0.30 in. w, 0.062 in. thk; mfr 06845, part no. 4032143-0001. (Attaching Parts) AS(1) on A2MP15AN; FM(1) on A2MP15AM, A2MP15AN, and A2MP15AL.	7-6
A2MP15AP and A2MP15AQ		RING, RETAINING: MIL type MS16624-1039.	7-6
A2MP15AR thru A2MP15AU		WASHER, FLAT: 0.620 in. dia., 0.193 in. ID, 0.010 in. thk; mfr 06845, part no. 4032136-0001.	7-6
A2MP15AV thru A2MP15AY		RING, RETAINING: MIL type MS16633-4018.	7-6
A2MP15AZ		Not used.	
A2MP15BA and A2MP15BB		SHIM, STEEL: 0.380 in. dia, 0.20 in. ID, 0.011 in. thk; mfr 06845, part no. 2074903-3404.	7-6
A2MP16		BLOCK, ADJUSTABLE, IDLER: 0.64 in. long; mfr 06845, part no. 4032373-0501. (Attaching Parts) A(2) B(2) H(1)	7-4A
A2MP16A		SHAFT, SPROCKET IDLER: 0.500 in. OD, 0.1268 in. ID, 0.64 in. long; mfr 06845, part no. 4030871-0001.	7-4A
A2MP16B		SPROCKET, WHEEL: 1.182 in. dia, 0.268 in. thk; mfr 06845, part no. 4030779-0701.	7-4A
A2MP16C		BEARING, ROLLER, NEEDLE: 0.34 in. OD, 0.19 in. ID, 0.25 in. thk; mfr 60380, part no. B34, 06845, dwg 4032157-0701.	7-4A
A2MP17		BLOCK, ADJUSTABLE, IDLER: Mfr 06845, part no. 4032373-0501. (Attaching Parts) A(2) B(2) H(1)	7-4A
A2MP17A		SHAFT, SPROCKET, IDLER: 0.64 in. long; mfr 06845, part no. 4030871-0001.	7-4A
A2MP17B		SPROCKET, WHEEL: 1.182 in. dia, 0.268 in. thk; mfr 06845, part no. 4030779-0701.	7-4A
A2MP17C		BEARING, ROLLER, NEEDLE: 0.34 in. OD, 0.19 in. ID, 0.25 in. thk; mfr 60380, part no. B34, 06845, dwg 4032157-0701.	7-4A

Table 7-2. Radio Receiver R-1051H/URR, Parts List (Continued)

CHASSIS ASSEMBLY A2

REFERENCE DESIGNATION	NOTES	NAME AND DESCRIPTION	FIGURE NUMBER
A2MP18		BLOCK, ADJUSTABLE, IDLER: Mfr 06845, part no. 4032373-0502. (Attaching Parts) A(2) B(2) H(1)	7-4A
A2MP18A		SHAFT, SPROCKET, IDLER: 0.64 in. long; mfr 06845, part no. 4030871-0001.	7-4A
A2MP18B		SPROCKET, WHEEL: 1.182 in. dia, 0.268 in. thk; mfr 06845, part no. 4030779-0701.	7-4A
A2MP18C		BEARING, ROLLER, NEEDLE: 0.34 in. OD, 0.19 in. ID, 0.25 in. thk; mfr 60380, part no. B34, 06845, dwg 4032157-0701.	7-4A
A2MP19		CHAIN, ROLLER: 20.35 in. long; mfr 72625, part no. XAU-1147-D47SS-138P, 98738, dwg 45P226357-01 is preferred due to ease of installation; 45P228277-01 is alternate.	7-4A
A2MP20		CHAIN, ROLLER: 23.60 in. long; mfr 72625, part no. XAU-1147-D47SS-160P, 98738, dwg 45P226357-02 is preferred due to ease of installation; 45P228277-02 is alternate.	7-4A
A2MP21		CHAIN, ROLLER: 30.38 in. long; mfr 72625, part no. XAU-1147-D47SS-206P, 98738, dwg 45P226357-03 is preferred due to ease of installation; 45P228277-03 is alternate	7-4A
A2MP22 thru A2MP75		Not used.	
A2MP76		SPRING, CLAMP: Steel, cadmium plated, 1.88 in. long, 0.621 in. w, 0.0149 in. thk; mfr 06845, part no. 4030898-0001.	7-4A
A2MP77 thru A2MP90		Not used.	
A2MP91 thru A2MP94		STUD EXTENSION: 0.250 in. hex, 0.84 in. long; mfr 06845, part no. 4032189-0003.	7-4S
A2MP95 thru A2MP98		SPACER: 0.250 in. hex, 0.500 in. long; mfr 06845 part no. 4032128-0004.	7-4S
A2MP99		SHIELD, COMPONENT: 4.00 in. long, 3.12 in. w, 0.62 in. thk; mfr 98738, part no. 07P226290-24-11. (Attaching Parts) DZ(4)	7-4S
A2MP100 and A2MP101		BUSHING: Polyamide (nylon), 0.375 in. dia, 0.094 in. thk; mfr 06845, part no. 4032106-0002.	7-4A
A2MP102		SHIELD, COMPONENT: 15.54 in. long, 2.40 in. w; 0.56 in. d; mfr 98738, part no. 26P228771-01. (Attaching Parts) BU(2) BM(2)	7-4S
A2MP103		STRAP, RETAINING: Stainless steel, 2.080 in. long, 0.500 in. w, 0.375 in. thk; mfr 84971, part no. TA516SS6-13, 06845, dwg 4032173-0702. (Attaching Parts) B(2) C(2) H(2)	7-4A

Table 7-2. Radio Receiver R-1051H/URR, Parts List (Continued)

CHASSIS ASSEMBLY A2

REFERENCE DESIGNATION	NOTES	NAME AND DESCRIPTION	FIGURE NUMBER
A2MP104		SHIELD, COMPONENT: Plastic sheet 1.86 in. long, 1.80 in. w; mfr 98738, part no. 14P226670-21-11. (Attaching Parts) FS(4)	7-4S
A2MP105		CLAMP, LOOP: Polyamide (nylon), 0.728 in. long, 0.375 in. w, 0.187 in. loop dia; mfr 09922, part no. HP3N, 06845, dwg 4032230-0702. (Attaching Parts) A(1) B(1) H(1)	7-4A
A2MP106		CLAMP, LOOP: 0.811 in. long, 0.375 in. w, 0.312 in. dia; mfr 09922, part no. HP5N, 06845, dwg 4032230-0704. (Attaching Parts) A(1) B(1) H(1)	7-4A
A2MP107		Not used.	
A2MP108 and A2MP109		SPACER: 0.188 in. hex, 0.78 in. long; mfr 06845, part no. 4032112-0001. (Attaching Parts) AJ(1)	7-4A
A2MP110 and A2MP111		Not used.	
A2MP112 thru A2MP115		STUD, EXTENSION: 0.187 in. hex, 1.04 in. long; mfr 06845, part no. 4032189-0001.	7-4S
A2MP116 and A2MP117		CLAMP, LOOP: 0.939 in. long, 0.375 in. w, 0.440 in. loop dia, mfr 09922, part no. HP7N, 06845, dwg 4032230-0706. (Attaching Parts) L(1) K(1) M(1)	7-4A
A2MP118		SHIELD: 3.470 in. long, 1.150 in. w, 0.78 in. dia; mfr 06845, part no. 4032524-0001. (Attaching Parts) AQ(2) AL(2)	7-4A
A2MP119		Not used.	
A2MP120 and A2MP121		STUD, EXTENSION: 0.287 in. hex, 0.98 in. long; mfr 06845, part no. 4032189-0005.	7-4A
A2MP122		POST: 0.250 in. hex, 1.06 in. long; mfr 06845, part no. 4032192-0001.	7-4B
A2MP123 thru A2MP139		Not used.	
A2MP140	*	DUCT, WIRING: 8 in. long, 0.68 in. w; mfr 98738, dwg no. 4032251-0001. (Attaching Parts) BW(3) BX(3) BY(3)	7-4A
A2MP141	*	DUCT, WIRING: 13.12 in. long, 0.62 in. w, PVC; mfr 06845, part no. 11P226783-01. (Attaching Parts) BW(3) BX(3) BY(3)	7-4A
A2MP142	*	DUCT, WIRING: 7.75 in. long, 0.62 in. w, PVC; mfr 06845, part no. 11P226763-01. (Attaching Parts) BW(3) BX(3) BY(3)	7-4A
A2MP143	*	COVER, DUCT: 8.0 in. long, 0.690 in. w; mfr 98738 dwg no. 4032482-0001.	7-4A

Table 7-2. Radio Receiver R-1051H/URR, Parts List (Continued)

CHASSIS ASSEMBLY A2

REFERENCE DESIGNATION	NOTES	NAME AND DESCRIPTION	FIGURE NUMBER
A2MP144 and A2MP145	*	COVER, DUCT: 6.56 in. long, 0.690 in. w; mfr 98738 dwg no. 11P226783-02.	7-4A
A2MP146	*	COVER, DUCT: 7.75 in. long, 0.690 in. w; mfr 98738 dwg 11P226783-02.	7-4A
A2MP147		Not used.	
A2MP148		FERRULE, GROUNDING: 0.590 in. long, 0.150 in. dia; mfr 08795, part no. D-144-21, 06845, dwg 4017497-0704.	7-4B
A2MP149 and A2MP150		NUT, SELF-LOCKING, CAP: 0.453 in. OD x 10-32; mfr 06845, part no. 4032211-0701.	7-4A
A2MP151 thru A2MP155		Not used.	
A2MP156		INSULATOR, PLATE, MICA: 1.655 in. long, 1.063 in. w, 0.002 in. thk; mfr 06845, part no. 4032435-0701.	7-4B
A2P1 thru A2P24		Not used.	
A2P25	2	CONNECTOR, PLUG, ELECTRICAL: MIL type M24308/1-3 (P/O chassis harness assembly).	
A2R1 thru A2R7		Not used.	
A2R8		RESISTOR, FIXED, WIRE-WOUND: 332 ohm ±1%, 5 w, MIL type RER60F3320M. (Attaching Parts) J(2) T(2)	7-4B
A2R9 thru A2R19		Not used.	
A2R20		RESISTOR, FIXED: 13k ohm ±5%, 2 w, MIL type RCR42G133JS.	7-4B
A2R21 and A2R22		Not used.	
A2R23		RESISTOR, FIXED, WIRE-WOUND: 53.6 ohm ±1%, 10 w, MIL type RER65F53R6M. (Attaching Parts) J(2) T(2)	7-4A
A2R24 and A2R25		Not used.	
A2R26		RESISTOR, FIXED, FILM: 243 ohm ±2%, ¼ w; MIL type RLR07C2430FM.	7-4A
A2R27		RESISTOR, FIXED, FILM: 3.65k ohm ±2%, ¼w; MIL type RLR07C3651FM.	7-4A
A2T1		TRANSFORMER, POWER: 215 Vac working voltage, 2.75 in. long, 3.438 in. w, 4.50 in. dia; mfr 28994, part no. GK4763, 98738, dwg 25P228008-01. (Attaching Parts) AM(4) AN(4)	7-4B
		* Indicates item to be ordered by length.	

Table 7-2. Radio Receiver R-1051H/URR, Parts List (Continued)

CHASSIS ASSEMBLY A2

REFERENCE DESIGNATION	NOTES	NAME AND DESCRIPTION	FIGURE NUMBER
A2U1		INTEGRATED CIRCUIT: Mfr 27014, part no. LM117KSTEEL/883, 98738, dwg 48P228697-01. (Attaching Parts) L(1) K(2) M(2) EJ(2)	7-4B
A2W1 thru A2W18		Not used.	
A2W19	2	CABLE ASSEMBLY, RF: 13.00 in. long; mfr 98738, part no. 30A226481-21-11.*	7-4B
A2W20	2	CABLE ASSEMBLY, RF: 9.62 in. long; mfr 98738, part no. 30A226481-22-11.	7-4B
A2W21	2	CABLE ASSEMBLY, RF: 12.00 in. long; mfr 98738, part no. 30A226481-23-11.*	7-4B
A2W22	2	CABLE ASSEMBLY, RF: 10.00 in. long; mfr 98738, part no. 30A226481-24-11.	7-4B
A2W23	2	CABLE ASSEMBLY, RF: 12.40 in. long; mfr 98738, part no. 30A226481-25-11.*	7-4B
A2W24	2	CABLE ASSEMBLY, RF: 9.00 in. long; mfr 98738, part no. 30A226481-26-11.	7-4B
A2W25	2	CABLE ASSEMBLY, RF: 14.98 in. long; mfr 98738, part no. 30A226482-28-11.	7-4B
A2W26	2	CABLE ASSEMBLY, RF: 3.25 in. long; mfr 98738, part no. 30A226481-33-11.	7-4B
A2W27	2	CABLE ASSEMBLY, RF: 5.62 in. long; mfr 98738, part no. 30A226481-27-11.	7-4B
A2W28	2	CABLE ASSEMBLY, RF: 14.88 in. long, mfr 98738, part no. 30A226481-28-11.	7-4B
A2W29	2	CABLE ASSEMBLY, RF: 7.50 in. long; mfr 98738, part no. 30A226481-29-11.	7-4B
A2W30	2	CABLE ASSEMBLY, RF: 6.00 in. long; mfr 98738, part no. 30A226481-30-11.	7-4B
A2W31	2	CABLE ASSEMBLY, RF: 4.18 in. long; mfr 98738, part no. 30A226481-31-11.	7-4B
A2W32	2	CABLE ASSEMBLY, RF: 5.00 in. long; mfr 98738, part no. 30A226481-32-11.	7-4B
A2W33	2	CABLE ASSEMBLY, RF: 9.75 in. long; part of A2FL3.	7-4B
A2W34	2	CABLE ASSEMBLY, RF: 4.18 in. long; mfr 98738, part no. 30A226482-31-11.	7-4B
A2XA1P1		CONNECTOR, PLUG, ELECTRICAL: 13 contacts including 3 coaxial; 2.088 in. long, 0.494 in. w, 0.419 in. thk; mfr 71785, part no. DBMMR13W3S, 06845, dwg 4032484-0713. (Attaching Parts) CA(2) T(2) BZ(2)	7-4B
A2XA1P1A1 thru A2XA1P1A3		CONNECTOR, PLUG, ELECTRICAL: Item 27.	7-4B
		* Part of harness assembly, part no. 90A228865-01.	

Table 7-2. Radio Receiver R-1051H/URR, Parts List (Continued)

CHASSIS ASSEMBLY A2

REFERENCE DESIGNATION	NOTES	NAME AND DESCRIPTION	FIGURE NUMBER
A2XA1P2		CONNECTOR, PLUG, ELECTRICAL: 9 contacts including 4 coaxial; 2.088 in. long, 0.494 in. w, 0.428 in. thk; mfr 71785, part no. DBMMR9W4S, 06845, dwg 4032484-0715. (Attaching Parts) CA(2) T(2) BZ(2)	7-4B
A2XA1P2A1 thru A2XA1P2A4		CONNECTOR, PLUG, ELECTRICAL: Item 27.	7-4B
A2XA2P1		CONNECTOR, PLUG, ELECTRICAL: 25 contacts including 3 coaxial; 2.729 in. long, 0.663 in. w, 0.429 in. thk; mfr 71785, part no. DCMMR25W3S, 06845, dwg 4032484-0720. (Attaching Parts) CA(2) T(2) BZ(2)	7-4B
A2XA2P1A1 thru A2XA2P1A3		CONNECTOR, PLUG, ELECTRICAL: Item 27.	7-4B
A2XA3P1		CONNECTOR, PLUG, ELECTRICAL: 25 contacts including 3 coaxial; 2.729 in. long, 0.663 in. w, 0.429 in. thk; mfr 71785, part no. DCMMR25W3S, 06845, DWG 4032484-0720. (Attaching Parts) CA(20 T(2) BZ(2)	7-4B
A2XA3P1A1		Not used.	
A2XA3P1A2 and A2XA3P1A3		CONNECTOR, PLUG, ELECTRICAL: Item 27.	7-4B
A2XA4P1		CONNECTOR, RECEPTACLE, ELECTRICAL: 15 contacts; 1.54 in. long, 0.50 in. w, 0.65 in. thk; 98738, part no. 09P226565-23. (Attaching Parts) CA(2) T(2) BZ(2)	7-4B
A2XA4P2		CONNECTOR, PLUG, ELECTRICAL: 17 contacts including 5 coaxial; 2.729 in. long, 0.494 in. w, 0.429 in. thk; mfr 71785, part no. DCMMR17W5S, 06845, dwg 4032484-0721. (Attaching Parts) CA(2) T(2) BZ(2)	7-4B
A2XA4P2A1		CONNECTOR, PLUG, ELECTRICAL: Item 27.	7-4B
A2XA4P2A2		Not used.	
A2XA4P2A3		CONNECTOR, PLUG, ELECTRICAL: Item 27.	7-4B
A2XA5P1		CONNECTOR, RECEPTACLE, ELECTRICAL: 2.229 in. long, 0.494 in. w, 0.429 in. h; mfr 71785, part no. DCMMR13W6S, 06845, dwg 4032484-0719. (Attaching Parts) CA(2) T(2) BZ(2)	7-4B
A2XA5P1A1 thru A2XA5P1A6		CONNECTOR, PLUG, ELECTRICAL: Item 27.	7-4B

Table 7-2. Radio Receiver R-1051H/URR, Parts List (Continued)

CHASSIS ASSEMBLY A2

REFERENCE DESIGNATION	NOTES	NAME AND DESCRIPTION	FIGURE NUMBER
A2XA6P1		CONNECTOR, PLUG, ELECTRICAL: 25 contacts including 3 coaxial; 2.729 in. long, 0.494 in. w, 0.429 in. thk; mfr 71785, part no. DCMMR25W3S, 06845, dwg 4032484-0720. (Attaching Parts) CA(2) T(2) BZ(2)	7-4B
A2XA6P1A1 thru A2XA6P1A3		CONNECTOR, PLUG, ELECTRICAL: Item 27.	7-4B
A2XA6P2		CONNECTOR, RECEPTACLE, ELECTRICAL: 2.541 in. long, 0.494 in. w, 0.429 in. h; mfr 71785, part no. DAMMR3W3S, 06845, dwg 4032484-0705. (Attaching Parts) CA(2) T(2) BZ(2)	7-4B
A2XA6P2A1		CONNECTOR, PLUG, ELECTRICAL: Item 27.	7-4B
A2XA6P2A2		Not used.	
A2XA6P2A3		CONNECTOR, ELECTRICAL, DUMMY: Right angle coaxial, 0.734 in. long, female contact; mfr 06845, part no. 4032270-0501.	7-4B
A2XA6P3		CONNECTOR, RECEPTACLE, ELECTRICAL: 1541 in long, 0.494 in. w, 0.429 in. h; mfr 71785, part no. DAMMR3W3S, 06845, dwg 4032484-0705. (Attaching Parts) CA(2) T(2) BZ(2)	7-4B
A2XA6P3A1		CONNECTOR, PLUG, ELECTRICAL: Item 27.	7-4B
A2XC1 and A2XC2		SOCKET, TUBE: MIL type M12883/01-02.	7-4A

Table 7-2. Radio Receiver R-1051H/URR, Parts List (Continued)

RECEIVER MODE SELECTOR A2A1

REFERENCE DESIGNATION	NOTES	NAME AND DESCRIPTION	FIGURE NUMBER
A2A1		RECEIVER MODE SELECTOR: 3.670 in. long, 2.170 in. w, 4.447 in. h; mfr 98738, part no. 01A229040-01. (Attaching Parts) CE(2)	7-7
A2A1C1		CAPACITOR, FIXED, MICA: 240 pF, ±5%, +500 V working; MIL type CMR04F241FPDM.	7-7
A2A1C2		CAPACITOR: Item 19.	7-7
A2A1C3		CAPACITOR, FIXED, MICA: 620 pF, ±5%, +500 V working; MIL type CMR04F621FPDM.	7-7
A2A1E1		TERMINAL, LUG: MIL type MS77070-1. (Attaching Parts) AQ(1)	7-7
A2A1E2 and A2A1E3		TERMINAL, STUD: 0.455 in. long, 0.136 in. hole dia; mfr 98291, part no. ST-SM29TUR, 06845, dwg 4010637-0709.	7-7
A2A1E4		TERMINAL, LUG: MIL type MS77070-1. (Attaching Parts) AQ(1)	7-7
A2A1E5 thru A2A1E7		TERMINAL, STUD: 0.455 in. long, 0.136 in. hole dia; mfr 98291, part no. ST-SM29TUR, dwg 4010637-0709.	7-7
A2A1FL1		FILTER, BANDPASS, USB: 0.437 in. dia, 2.25 in. long, 500 kHz, mfr 95105, part no. 526-9997-010, 98738, dwg 08P228093-02. (Attaching Parts) AL(2) AQ(2)	7-7
A2A1FL2		FILTER, BANDPASS, AM/CW: 0.437 in. dia, 2.25 in. long, 500 kHz; mfr 95105, part no. 526-8499-010, 98738, dwg 08P228093-03. (Attaching Parts) AL(2) AQ(2)	7-7
A2A1FL3		FILTER, BANDPASS, LSB: 0.437 in. dia; 2.25 in. long, 500 kHz; mfr 95105, part no. 526-9998-010, 98738, dwg 08P228093-01. (Attaching Parts) AL(2) AQ(2)	7-7
A2A1MP1		CHASSIS, ELECTRICAL EQUIPMENT: 4.38 in. long, 3.275 in. w, 2.078 in. h; mfr 98738, part no. 27A226419-22-11. (Attaching Parts) CE(2)	7-7
A2A1MP2		COVER: 4.406 in. long, 3.588 in. w; 0.041 in. thk; mfr 98738, part no. 15P226336-24-11. (Attaching Parts) AQ(1)	7-7
A2A1P1		CONNECTOR, RECEPTACLE, ELECTRICAL: 2.09 in. long, 0.49 in. w, 0.48 in. thk; mfr 71785, part no. DBMME13W3P, 06845, dwg 4032484-0708. (Attaching Parts) CF(2)	7-7
A2A1P1A1 thru A2A1P1A3		CONNECTOR, PLUG, ELECTRICAL: 0.734 in. long, 0.530 in. w, 0.045 in. dia; mfr 71785, part no. 318-11-99-284, 06845, dwg 4032484-0730.	7-7

Table 7-2. Radio Receiver R-1051H/URR, Parts List (Continued)

RECEIVER MODE SELECTOR A2A1

REFERENCE DESIGNATION	NOTES	NAME AND DESCRIPTION	FIGURE NUMBER
A2A1P2		CONNECTOR, RECEPTACLE, ELECTRICAL: 2.09 in. long, 0.49 in. w, 0.43 in. thk; mfr 71785, part no. DBMME9W4P, 06845, dwg 4032484-0712. (Attaching Parts) CF(2)	7-7
A2A1P2A1 thru A2A1P2A4		CONNECTOR, PLUG, ELECTRICAL: 0.734 in. long, 0.530 in. w, 0.045 in. dia; mfr 71785, part no. 318-11-99-284, 06845, dwg 4032484-0730.	7-7
A2A1R1		RESISTOR, FIXED, COMPOSITION: 2.4k ohm ±5%, 1/4 w; MIL type RCR07G242JS.	7-8
A2A1W1 thru A2A1W4		Not used.	
A2A1W5		CABLE ASSEMBLY, RF: 6.4 in. long, mfr 98738, part no. 30A226482-35-11. Connects to A2A1P1A1.	7-7
A2A1W6		CABLE ASSEMBLY, RF: 5.62 in. long; mfr 98738, part no. 30A226482-43-11. Connects to A2A1P1A2.	7-7
A2A1W7		CABLE ASSEMBLY, RF: 4.0 in. long; mfr 98738, part no. 30A226482-33-11. Connects to A2A1P1A3.	7-7
A2A1W8	2	CABLE ASSEMBLY, RF: 5.0 in. long; mfr 98738, part no. 30A226790-25-11. Connects to A2A1A1E17.	
A2A1W9	2	CABLE ASSEMBLY: 4.5 in. long; mfr 98738, part no. 30A226790-30-11. Connects to A2A1A1E18.	
A2A1W10	2	CABLE ASSEMBLY: 6.25 in. long; mfr 98738, part no. 30A226790-11. Connects to A2A1A1E16.	
A2A1W11 thru A2A1W27		Not used.	
A2A1W28 thru A2A1W30		CABLE ASSEMBLY, RF: 3.25 in. long; mfr 98738, part no. 30A226482-32-11. Connects to A2A1P2A1 thru A3.	7-7
A2A1W31		CABLE ASSEMBLY, RF: 5.0 in. long; mfr 98738, part no. 30A226482-42-11. Connects to A2A1P2A4.	7-7
A2A1A1		MODE GATE SUBASSEMBLY: L-shaped, 3.34 in. long, 3.80 in. w; mfr 98738, part no. 01A228159-02. (Attaching Parts) AL(4) AF(4) CG(4)	7-8
A2A1A1C1 thru A2A1A1C6		CAPACITOR: Item 19.	7-8
A2A1A1C7 thru A2A1A1C16		CAPACITOR: Item 19.	7-8

Table 7-2. Radio Receiver R-1051H/URR, Parts List (Continued)

RECEIVER MODE SELECTOR A2A1

REFERENCE DESIGNATION	NOTES	NAME AND DESCRIPTION	FIGURE NUMBER
A2A1A1C17		CAPACITOR: Item 13.	7-8
A2A1A1C18 thru A2A1A1C20		CAPACITOR: 240 pF, ±5%, 500 Vdc working; MIL type CMR04F241FPDM.	7-8
A2A1A1C21 and A2A1A1C22		CAPACITOR: Item 19.	7-8
A2A1A1C23		CAPACITOR, FIXED, MICA: 620 pF, ±5%, +500 V working; MIL type CMR04F621FPDM.	7-8
A2A1A1CR1 and A2A1A1CR2		SEMICONDUCTOR DEVICE, DIODE: MIL type JAN1N4148.	7-8
A2A1A1CR3		SEMICONDUCTOR DEVICE, DIODE: Item 60.	7-8
A2A1A1CR4		SEMICONDUCTOR DEVICE, DIODE: MIL type JAN1N5711.	7-8
A2A1A1E1 thru A2A1A1E24		SOLDER CONNECTION - FOR REFERENCE ONLY.	7-8
A2A1A1E25 and A2A1A1E26		TERMINAL, TURRET: Brass, ½ hard, silver plated; 0.062 in. dia., 0.240 in. long; mfr 88245, part no. 2031B-1, 98738, dwg 29P239053-21-11.	7-8
A2A1A1Q1		TRANSISTOR: Item 64.	7-8
A2A1A1Q2 thru A2A1A1Q4		TRANSISTOR: Item 65.	7-8
A2A1A1Q5 thru A2A1A1Q7		TRANSISTOR: Item 64.	7-8
A2A1A1R1		RESISTOR: Item 48.	7-8
A2A1A1R2 and A2A1A1R3		RESISTOR, FIXED, COMPOSITION: 13k ohm ±5%, ¼ w; MIL type RCR07G133JS.	7-8
A2A1A1R4		RESISTOR: Item 37.	7-8
A2A1A1R5		RESISTOR, FIXED, COMPOSITION: 2k ohm ±5%, ¼ w; MIL type RCR07G202JS.	7-8
A2A1A1R6		RESISTOR, FIXED, COMPOSITION: 5.1k ohm ±5%, ¼ w; MIL type RCR07G512JS.	7-8
A2A1A1R7		RESISTOR: Item 43.	7-8
A2A1A1R8		RESISTOR, FIXED, COMPOSITION: 680 ohm ±5%, ¼ w; MIL type RCR07G681JS.	7-8
A2A1A1R9 and A2A1A1R10		RESISTOR, FIXED, COMPOSITION: Item 56A.	7-8
A2A1A1R11		RESISTOR, FIXED, COMPOSITION: 1.5k ohm ±5%, ¼ w; MIL type RCR07G152JS.	7-8
A2A1A1R12		RESISTOR: Item 56A.	7-8

Table 7-2. Radio Receiver R-1051H/URR, Parts List (Continued)

RECEIVER MODE SELECTOR A2A1

REFERENCE DESIGNATION	NOTES	NAME AND DESCRIPTION	FIGURE NUMBER
A2A1A1R13		RESISTOR, FIXED, COMPOSITION: 2k ohm ±5%, ¼ w; MIL type RCR07G202JS.	7-8
A2A1A1R14 and A2A1A1R15		RESISTOR, FIXED, COMPOSITION: Item 56A.	7-8
A2A1A1R16		RESISTOR: Item 37.	7-8
A2A1A1R17		RESISTOR: Item 38.	7-8
A2A1A1R18		RESISTOR: Item 39.	7-8
A2A1A1R19		RESISTOR, FIXED, COMPOSITION: Item 56A.	7-8
A2A1A1R20		RESISTOR, FIXED, FILM: 750 ohm ±5%, ¼ w; MIL type RCR07G751JS.	7-8
A2A1A1R21		RESISTOR, FIXED, COMPOSITION: 2k ohm ±5%, ¼ w; MIL type RCR07G202JS.	7-8
A2A1A1R22		RESISTOR: Item 56A.	7-8
A2A1A1R23		RESISTOR, FIXED, FILM: 750 ohm ±5%, ¼ w; MIL type RCR07G751JS.	7-8
A2A1A1R24		RESISTOR: Item 39.	7-8
A2A1A1R25		RESISTOR, FIXED, COMPOSITION: 3k ohm, ±5%, ¼ w; MIL type RCR07G302JS.	7-8
A2A1A1R26		RESISTOR: Item 37.	7-8
A2A1A1R27		RESISTOR, FIXED, COMPOSITION: Item 39.	7-8
A2A1A1R28		RESISTOR, FIXED, COMPOSITION: 20k ohm ±5%, 1/4 w; MIL type RCR07G203JS.	7-8
A2A1A1R29		RESISTOR, FIXED, COMPOSITION: 5.6 k ohm ±5%, 1/4 w; MIL type RCR07G562JS.	7-8
A2A1A1R30		RESISTOR, FIXED, COMPOSITION: 7.5k ohm ±5%, ¼ w; MIL type RCR07G752JS.	7-8
A2A1A1TP1		CONNECTOR, ELECTRICAL, TEST-POINT TYPE: MIL type M39024-18-02.	7-8
A2A1A2		500 kHz GATE SUBASSEMBLY: 3.44 in. long, 1.58 in. w, mfr 98738, part no. 01A226168-21-11. (Attaching Parts) AL(4) AF(4) CG(4)	7-9
A2A1A2C1 thru A2A1A2C4		CAPACITOR, FIXED, MYLAR DIELECTRIC: 0.20 uf ±20%, 100 V working; 0.55 in. long, 0.35 in. w, 0.222 in. dia; mfr 99515, part no. EP36D4, 06845, dwg 4032429-0704.	7-9
A2A1A2CR1		SEMICONDUCTOR DEVICE, DIODE: Item 60.	7-9
A2A1A2R1		RESISTOR, FIXED, FILM: 910 ohm ±2%, ½ w; MIL type RLR20C9100GR.	7-9
A2A1A2R2 and A2A1A2R3		RESISTOR: Item 54.	7-9
A2A1A2R4		RESISTOR: Item 43.	7-9

Table 7-2. Radio Receiver R-1051H/URR, Parts List (Continued)

RECEIVER MODE SELECTOR A2A1

REFERENCE DESIGNATION	NOTES	NAME AND DESCRIPTION	FIGURE NUMBER
A2A1A2R5		RESISTOR, FIXED, FILM: 510 ohm ±2%, ½ w; MIL type RLR20C5100GR.	7-9
A2A1A2R6		RESISTOR: Item 37.	7-9
A2A1A3		CIRCUIT CARD ASSEMBLY; BEAT FREQUENCY OSCILLATOR SUBASSEMBLY: 3.44 in. long, 1.58 in. w; mfr 98738, part no. 01A226167-21-11. (Attaching Parts) AL(4) AF(4) CG(4)	7-10
A2A1A3C1		CAPACITOR: Item 13.	7-10
A2A1A3C2		CAPACITOR, FIXED, MICA: 3000 pF ±2%, 500 V working; MIL type CMR06F302GPDM.	7-10
A2A1A3C3		CAPACITOR, FIXED, CERAMIC: 91 pF ±5%, 500 V working; MIL type CC52TH910J.	7-10
A2A1A3C4		CAPACITOR, FIXED, MICA: 220 pF ±1%, 500 V working; MIL type CMR05F221FPDM.	7-10
A2A1A3C5		CAPACITOR, FIXED, MICA: 820 pF ±1%, 500 V working; MIL type CMR06F821FPDM.	7-10
A2A1A3C6		CAPACITOR, FIXED, MICA: 3000 pF ±2%, 500 V working; MIL type CMR06F302GPDM.	7-10
A2A1A3C7 and A2A1A3C8		CAPACITOR, FIXED, MYLAR DIELECTRIC: 0.01 mf ±20%, 100 V working; 0.42 in. long, 0.29 in. w, 0.17 in. thk; mfr 99515, part no. EP36D1, dwg 4032429-0701.	7-10
A2A1A3C9		CAPACITOR, FIXED, MICA: 910 pF ±2%, 500 V working; MIL type CMR06F911GPDM.	7-10
A2A1A3C10		CAPACITOR: Item 19.	7-10
A2A1A3CR1		DIODE: Varactor; mfr 04713, part no. 1N954, 06845, dwg 4031991-0701.	7-10
A2A1A3L1		COIL, RF, VARIABLE: 470 uH, 0.400 in. dia, 0.500 in. h; mfr 72259, part no. V1H470, 06845, dwg 4030767-0701.	7-10
A2A1A3MP1 thru A2A1A3MP3		MOUNTING PAD, ELECTRONIC: Diallyl Phthalate; 0.344 in. dia, 0.095 in. thk; mfr 13103, part no. 7717-109, 98738, dwg 14S132171-39A-9.	7-10
A2A1A3Q1 thru A2A1A3Q3		TRANSISTOR: Item 65.	7-10
A2A1A3R1		RESISTOR, FIXED, COMPOSITION: 22k ohm ±5%, ¼ watt; MIL type RCR07G223JS.	7-10
A2A1A3R2		RESISTOR, FIXED, COMPOSITION: 100k ohm ±5%, ¼ watt; MIL type RCR07G104JS.	7-10
A2A1A3R3		RESISTOR, FIXED, FILM: 20k ohm ±2%, ¼ w; MIL type RCR07C2002GR.	7-10
A2A1A3R4		RESISTOR, FIXED, COMPOSITION: 100k ohm ±5%, ¼ w; MIL type RCR07G104JS.	7-10
A2A1A3R5		RESISTOR: Item 46.	7-10

Table 7-2. Radio Receiver R-1051H/URR, Parts List (Continued)

RECEIVER MODE SELECTOR A2A1

REFERENCE DESIGNATION	NOTES	NAME AND DESCRIPTION	FIGURE NUMBER
A2A1A3R6		RESISTOR: ITEM 38.	7-10
A2A1A3R7		RESISTOR: Item 42.	7-10
A2A1A3R8		RESISTOR, FIXED, COMPOSITION: 18k ohm ±5%, ¼ w; MIL type RCR07G183JS.	7-10
A2A1A3R9		RESISTOR: Item 55.	7-10
A2A1A3R10		RESISTOR, FIXED, COMPOSITION: 5600 ohm ±5%, ¼ w; MIL type RCR07G562JS.	7-10
A2A1A3R11		RESISTOR, FIXED, FILM: 910 ohm ±2%, ¼ w; MIL type RLR07C9100GR.	7-10
A2A1A3R12 and A2A1A3R13		RESISTOR: Item 37.	7-10
A2A1A3R14		RESISTOR, FIXED, COMPOSITION: 2000 ohm ±5%, ¼ w; MIL type RCR07G202JS.	7-10
A2A1A3T1		COIL, RF, VARIABLE: 0.500 MHz, 0.422 in. dia, 0.490 in. h; mfr 93292, part no. 500-2384, 06845, dwg 4032552-0701.	7-10
A2A1A3TP1		CONNECTOR, ELECTRICAL, TEST-POINT TYPE: Item 20.	7-10

Table 7-2. Radio Receiver R-1051H/URR, Parts List (Continued)

IF/AUDIO AMPLIFIER ASSEMBLY A2A2

REFERENCE DESIGNATION	NOTES	NAME AND DESCRIPTION	FIGURE NUMBER
A2A2		IF/AUDIO AMPLIFIER ASSEMBLY: 4.42 in. long, 2.17 in. w, 4.40 in. h; mfr 98738, part no. 01A226058-22-11. (Attaching Parts CE(2)	7-11
A2A2E1		TERMINAL, LUG: 0.531 in. long, 0.250 in. w; mfr 79963, part no. 11A, 06845, dwg 2004437-0703. (Attaching Parts) See A2A2P1	7-11
A2A2MP1		CHASSIS, ELECTRICAL: 4.350 in. long, 4.327 in. w, 2.078 in. h; mfr 98738, part no. 27A226418-21-11.	7-11
A2A2MP2		COVER: Aluminum alloy, 4.337 in. long, 2.088 in. w; mfr 98738, part no. 15P228031-01. (Attaching Parts) AQ(2)	7-11
A2A2P1		CONNECTOR, RECEPTACLE, ELECTRICAL: 2.729 in. long, 0.494 in. w, 0.426 in. thk; mfr 71785, part no. DCMM25W3P, 06845, dwg 4032484-0716. (Attaching Parts) AA(2) AD(1) AJ(1) AK(2)	7-11
A2A2P1A1 thru A2A2P1A3		CONNECTOR, PLUG, ELECTRICAL: 0.734 in. long, 0.530 in. w, 0.045 in. thk; mfr 71785, part no. 318-11-99-284, dwg 4032484-0730.	7-11
A2A2T1		TRANSFORMER, AUDIO FREQUENCY: 1.187 in. long, 0.875 in. w, 1.000 in. h; mfr 01961, part no. P39333, 06845, dwg 4032121-0701. (Attaching Parts) CJ(2)	7-11
A2A2W1		CABLE ASSEMBLY, RF: 3.35 in. long; mfr 98738, part no.30A226482-32-11, connected to A2A2P1A3.	7-11
A2A2W2		CABLE, ASSEMBLY: 4.00 in. long; mfr 98738, part no. 30A226482-33-11, connected to A2A2P1A1.	7-11
A2A2W3		CABLE ASSEMBLY, RF: 6.00 in. long; mfr 98738, part no. 30A226482-46-11, connected to A2A2P1A2.	7-11
A2A2A1		AGC/AUDIO AMPLIFIER SUBASSEMBLY: 3.68 in. long, 2.57 in. w, 0.63 in. thk; mfr 98738, part no. 01A228102-01. (Attaching Parts) AF(4) AL(4) CG(4)	7-12
A2A2A1C1		Not used.	
A2A2A1C2		CAPACITOR: Item 19.	7-12
A2A2A1C3 thru A2A2A1C5		CAPACITOR: Item 18.	7-12
A2A2A1C6		CAPACITOR: Item 12.	7-12
A2A2A1C7		CAPACITOR, FIXED, CERAMIC: 0.022 uF ±10%, 100 V working; MIL type M39014-02-1222.	7-12
A2A2A1C8		CAPACITOR: Item 4.	7-12

Table 7-2. Radio Receiver R-1051H/URR, Parts List (Continued)

IF/AUDIO AMPLIFIER ASSEMBLY A2A2

REFERENCE DESIGNATION	NOTES	NAME AND DESCRIPTION	FIGURE NUMBER
A2A2A1C9		CAPACITOR: Item 18.	7-12
A2A2A1C10		CAPACITOR: Item 4.	7-12
A2A2A1C11		CAPACITOR: Item 16.	7-12
A2A2A1C12		CAPACITOR, FIXED, ELECTROLYTIC: 6.8 uF ±10%, 6 Vdc working, MIL type M38003/01-2254.	7-12
A2A2A1C13		CAPACITOR, FIXED, ELECTROLYTIC: 15 uF ±10%, 20 Vdc working; MIL type M39003/01-2289.	7-12
A2A2A1C14		Not used.	
A2A2A1C15		CAPACITOR: Item 19.	7-12
A2A2A1C16		CAPACITOR, FIXED, ELECTROLYTIC: 6.8 uF ±20%, 35 Vdc working; MIL type M39003/01-2305.	7-12
A2A2A1CR1 and A2A2A1CR2		SEMICONDUCTOR DEVICE, DIODE, MIL type JAN1N5711.	7-12
A2A2A1CR3		SEMICONDUCTOR DEVICE, DIODE: MIL type JAN1N645.	7-12
A2A2A1CR4 and A2A2A1CR5		SEMICONDUCTOR DEVICE, DIODE: Item 60.	7-12
A2A2A1MP1 thru A2A2A1MP7		MOUNTING PAD, ELECTRONIC: Diallyl phthalate, 0.095 in. thk, 0.344 in. dia; mfr 13103, part no. 7717-109, 98738, dwg 14S132171-39A-9.	7-12
A2A2A1Q1 and A2A2A1Q2		TRANSISTOR: Item 65.	7-12
A2A2A1Q3 and A2A2A1Q4		TRANSISTOR: MIL type JAN2N930.	7-12
A2A2A1Q5		Not used.	
A2A2A1Q6 thru A2A2A1Q8		TRANSISTOR: Item 65.	7-12
A2A2A1Q9 thru A2A2A1Q12		TRANSISTOR: Item 64.	7-12
A2A2A1Q13 and A2A2A1Q14		TRANSISTOR: Item 65.	7-12
A2A2A1R1		RESISTOR, FIXED, FILM : 6200 ohm ±2%, ¼ w; MIL type RLR07C6201GR.	7-12
A2A2A1R2		RESISTOR: Item 38.	7-12
A2A2A1R3		RESISTOR: Item 47.	7-12
A2A2A1R4		RESISTOR, FIXED, COMPOSITION: 1800 ohm ±5%, ¼ w; MIL type RCR07G182JS.	7-12
A2A2A1R5		RESISTOR, FIXED, COMPOSITION: 270 ohm ±5%, ¼ w; MIL type RCR07G271JS.	7-12
A2A2A1R6		RESISTOR, VARIABLE, WIRE-WOUND: 1k ohm, ±5%, 3/4 w; MIL type M39015/2-004XM.	7-12

Table 7-2. Radio Receiver R-1051H/URR, Parts List (Continued)

IF/AUDIO AMPLIFIER ASSEMBLY A2A2

REFERENCE DESIGNATION	NOTES	NAME AND DESCRIPTION	FIGURE NUMBER
A2A2A1R7		RESISTOR, FIXED, COMOSITION: 3300 ohm ±5%, ¼ w; MIL type RCR07G332JS.	7-12
A2A2A1R8		RESISTOR, FIXED, FILM: 620 ohm ±2%, ¼ w; MIL type RLR07C6200GR.	7-12
A2A2A1R9 and A2A2A1R10		RESISTOR: Item 38.	7-12
A2A2A1R11		RESISTOR, FIXED, FILM: 7500 ohm ±2%, ¼ w; MIL type RLR07C7501GR.	7-12
A2A2A1R12		RESISTOR: Item 39.	7-12
A2A2A1R13		RESISTOR, FIXED, COMPOSITION: 100 ohm ±5%, ¼ w; MIL type RCR07G101JS.	7-12
A2A2A1R14		Not used.	
A2A2A1R15		RESISTOR, FIXED, FILM: 3600 ohm ±2%, ¼ w; MIL type RLR07C3601GR.	7-12
A2A2A1R16		RESISTOR, FIXED, FILM: 5100 ohm ±2%, ¼ w; MIL type RLR07C5101GR.	7-12
A2A2A1R17		Not used.	
A2A2A1R18		RESISTOR, FIXED, COMPOSITION: 3300 ohm ±5%, ¼ w; MIL type RCR07G332JS.	7-12
A2A2A1R19		RESISTOR, FIXED, COMPOSITION: 330k ohm ±5%, ¼ w; MIL type RCR07G334JS.	7-12
A2A2A1R20		RESISTOR: Item 42.	7-12
A2A2A1R21		RESISTOR, FIXED, COMPOSITION: 3900 ohm ±5%, ¼ w; MIL type RCR07G392JS.	7-12 7-12
A2A2A1R22		RESISTOR: Item 39.	7-12
A2A2A1R23		RESISTOR: Item 43.	7-12
A2A2A1R24		RESISTOR: FIXED, FILM: 51k ohm ±2%, ¼ w; MIL type RLR07C5102GR.	7-12
A2A2A1R25		RESISTOR, VARIABLE, WIRE-WOUND: 5000 ohm, ±5%, 3/4 w; MIL type M39015/2-006XM.	7-12
A2A2A1R26		RESISTOR. Item 39.	7-12
A2A2A1R27		RESISTOR, FIXED, COMPOSITION: 100k ohm ±5%, ¼ w; MIL type RCR07G104JS.	7-12
A2A2A1R28		RESISTOR: Item 39.	7-12
A2A2A1R29		RESISTOR: Item 52.	7-12
A2A2A1R30		RESISTOR: Item 39.	7-12
A2A2A1R31		RESISTOR: Item 55.	7-12
A2A2A1R32		RESISTOR: Item 54.	7-12
A2A2A1R33		RESISTOR: Item 39.	7-12
A2A2A1R34		RESISTOR, FIXED, COMPOSITION: 22k ohm ±5%, ¼ w; MIL type RCR07G223JS.	7-12
A2A2A1R35		RESISTOR: Item 39.	7-12
A2A2A1R36		RESISTOR, FIXED, COMPOSITION: 22k ohm ±5% ¼ w; MIL type RCR07G223JS.	7-12
A2A2A1R37		RESISTOR: Item 38.	7-12
A2A2A1R38		RESISTOR: Item 56.	7-12

Table 7-2. Radio Receiver R-1051H/URR, Parts List (Continued)

IF/AUDIO AMPLIFIER ASSEMBLY A2A2

REFERENCE DESIGNATION	NOTES	NAME AND DESCRIPTION	FIGURE NUMBER
A2A2A1R39		RESISTOR: Item 52.	7-12
A2A2A1R40		RESISTOR: Item 55.	7-12
A2A2A1R41		RESISTOR, FIXED, COMPOSITION: 10 megohm ±5%, ¼ w; MIL type RCR07G106JS.	7-12
A2A2A1R42		RESISTOR, FIXED, COMPOSITION: 12k ohm ±5%, ¼ w; MIL type RCR07G123JS.	7-12
A2A2A1RT1		RESISTOR, THERMAL: 5290 ohm ±5%, at 25 °C; 0.270 in. dia. 0.100 in. thk; mfr 75263, part no. 35F5, dwg 4032273-0701.	7-12
A2A2A1T1		TRANSFORMER, RF, VARIABLE: 600 kHz, mfr 93292, part no. 500-2393, 06845, dwg 4032348-0705.	7-12
A2A2A1T2		TRANSFORMER, RF, VARIABLE: 500 kHz, mfr 93292, part no. 500-2394, 06845, dwg 4032348-0706.	7-12
A2A2A1TP1 and A2A2A1TP2		CONNECTOR, ELECTRICAL, TEST-POINT TYPE: Item 20.	7-12
A2A2A2		IF/AUDIO AMPLIFIER SUBASSEMBLY: 4.08 in. long, 2.845 in. w, 0.80 in. thk; mfr 98738, part no. 01A228022-01. (Attaching Parts) AF(4) AL(4) CG(4) FF(1)	7-13
A2A2A2C1 and A2A2A2C2		CAPACITOR, FIXED, MYLAR DIELECTRIC: 0.1 uF ±20%, 100 Vdc working, 0.42 in. long, 0.29 in. w, 0.17 in. thk; mfr 99515, part no. EP36D-3, 06845, dwg 4032429-0703.	7-13
A2A2A2C3		CAPACITOR: Item 4.	7-13
A2A2A2C4 and A2A2A2C5		CAPACITOR: Item 7.	7-13
A2A2A2C6		CAPACITOR: Item 7A.	7-13
A2A2A2C7		CAPACITOR: Item 7.	7-13
A2A2A2C8		CAPACITOR: Item 4.	7-13
A2A2A2C9		CAPACITOR: Item 7A.	7-13
A2A2A2C10		CAPACITOR: Item 7.	7-13
A2A2A2C11		CAPACITOR: Item 4.	7-13
A2A2A2C12 and A2A2A2C13		CAPACITOR: Item 7.	7-13
A2A2A2C14		CAPACITOR: Item 4.	7-13
A2A2A2C15		CAPACITOR: Item 7A.	7-13
A2A2A2C16		CAPACITOR, FIXED, ELECTROLYTIC: 15 uF ±10%, 50 Vdc working; MIL type M39003/01-2377.	7-13
A2A2A2C17		CAPACITOR, FIXED, ELECTROLYTIC: 22 uf ±10%, 50 Vdc working; MIL type M39003/01-2306.	7-13

Table 7-2. Radio Receiver R-1051H/URR, Parts List (Continued)

IF/AUDIO AMPLIFIER ASSEMBLY A2A2

REFERENCE DESIGNATION	NOTES	NAME AND DESCRIPTION	FIGURE NUMBER
A2A2A2C18		CAPACITOR, FIXED, ELECTROLYTIC: 47 uF ±20%, 35 Vdc working; MIL type M39003/01-2313.	7-13
A2A2A2C19		CAPACITOR: Item 12.	7-13
A2A2A2C20		CAPACITOR, FIXED, ELECTROLYTIC: 15 uF ±10%, 50 Vdc working; MIL type M39003/01-2377.	7-13
A2A2A2C21 and A2A2A2C22		CAPACITOR, FIXED, ELECTROLYTIC: 15 uF ±20%, 20 Vdc working; MIL type M39003/01-2290.	7-13
A2A2A2C23		CAPACITOR, FIXED, MICA: 1200 pF ±5%, 500 Vdc working; MIL type CMR06F122JPDM.	7-13
A2A2A2C24		CAPACITOR, FIXED, ELECTROLYTIC: 15 uF ±20% Vdc working; MIL type M39003/01-2290.	7-13
A2A2A2C25		CAPACITOR, FIXED, ELECTROLYTIC: 47 uF ±20%, 35 Vdc working; MIL type M39003/01-2313.	7-13
A2A2A2C26		CAPACITOR: Item 16.	7-13
A2A2A2CR1		SEMICONDUCTOR DEVICE, DIODE: MIL type JAN1N645.	7-13
A2A2A2L1		COIL, RF: MIL type MS75089-35.	7-13
A2A2A2MP1 thru A2A2A2MP4		MOUNTING, PAD, ELECTRONIC: Diallyl phthalate, 0.344 in. dia, 0.095 in. thk; mfr 13103, part no. 7717-109, 98738, dwg 14S132171-39A-9.	7-13
A2A2A2Q1		TRANSISTOR: Item 65.	7-13
A2A2A2Q2 and A2A2A2Q3		TRANSISTOR: MIL type JAN2N706.	7-13
A2A2A2Q4 thru A2A2A2Q10		TRANSISTOR: Item 65.	7-13
A2A2A2R1		RESISTOR: Item 43.	7-13
A2A2A2R2 and A2A2A2R3		RESISTOR: Item 39.	7-13
A2A2A2R4		Not used.	
A2A2A2R5 and A2A2A2R6		RESISTOR: Item 54.	7-13
A2A2A2R7		RESISTOR: Item 57.	7-13
A2A2A2R8		RESISTOR: Item 38.	7-13
A2A2A2R9		RESISTOR: Item 53.	7-13
A2A2A2R10		RESISTOR: Item 43.	7-13
A2A2A2R11 and A2A2A2R12		RESISTOR: Item 39.	7-13
A2A2A2R13		RESISTOR: Item 44.	7-13
A2A2A2R14		RESISTOR: Item 43.	7-13
A2A2A2R15 and A2A2A2R16		RESISTOR: Item 39.	7-13
A2A2A2R17		RESISTOR: Item 37.	7-13

Table 7-2. Radio Receiver R-1051H/URR, Parts List (Continued)

IF/AUDIO AMPLIFIER ASSEMBLY A2A2

REFERENCE DESIGNATION	NOTES	NAME AND DESCRIPTION	FIGURE NUMBER
A2A2A2R18		RESISTOR, FIXED, FILM: 62 ohm ±2%, ¼ w; MIL type RLR07C62R0GR.	7-13
A2A2A2R19		RESISTOR: Item 43.	7-13
A2A2A2R20 and A2A2A2R21		RESISTOR: Item 39.	7-13
A2A2A2R22		RESISTOR, VARIABLE, WIRE-WOUND: 1k ohm ±5% 3/4 w; MIL type M39015/2-004XM.	7-13
A2A2A2R23		RESISTOR: Item 59.	7-13
A2A2A2R24		RESISTOR: Item 41.	7-13
A2A2A2R25		RESISTOR, FIXED, FILM: 11k ohm ±2%, ¼ w; MIL type RLR07C1102GR.	7-13
A2A2A2R26 and A2A2A2R27		RESISTOR: Item 38.	7-13
A2A2A2R28		RESISTOR, FIXED, FILM: 16k ohm ±2%, ¼ w; MIL type RLR07C1602GR.	7-13
A2A2A2R29		RESISTOR: Item 55.	7-13
A2A2A2R30		RESISTOR, FIXED, COMPOSITION: 2700 ohm ±5%, ¼ w; MIL type RCR07G272JS.	7-13
A2A2A2R31		RESISTOR, FIXED, FILM: 62 ohm ±2%, ¼ w; MIL type RLR07C62R0GR.	7-13
A2A2A2R32		RESISTOR: Item 57.	7-13
A2A2A2R33		RESISTOR, FIXED, FILM: 620 ohm ±2%, ¼ w; MIL type RLR07C6200GR.	7-13
A2A2A2R34		RESISTOR, FIXED, COMPOSITION: 820 ohm ±5%, ¼ w; MIL type RCR07G821JS.	7-13
A2A2A2R35		RESISTOR: Item 40.	7-13
A2A2A2R36		RESISTOR, FIXED, COMPOSITION: 3300 ohm ±5%, ½ w; MIL type RCR20G332JS.	7-13
A2A2A2R37		RESISTOR, FIXED, COMPOSITION: 39 ohm ±5%, ½ watt; MIL type RCR20G390JS.	7-13
A2A2A2R38		RESISTOR, FIXED, COMPOSITION: 6800 ohm ±5%, ¼ w; MIL type RCR07G682JS.	7-13
A2A2A2R39		RESISTOR: Item 48.	7-13
A2A2A2R40		RESISTOR: Item 56.	7-13
A2A2A2RT1		THERMISTOR: Negative coefficient, 500 ohm, ±10% at 25° C, ½ w; mfr 98738, part no. 06P226775-02.	7-13
A2A2A2T1		TRANSFORMER, RF, VARIABLE: 500 kHz, capacitance 845 pF ±3%, mfr 93292, part no. 500-2352, 06845, dwg 4032348-0701.	7-13
A2A2A2T2		TRANSFORMER, RF, VARIABLE: 500 kHz; mfr 93292, part no. 500-2353, 06845, dwg 4032348-0702.	7-13

Table 7-2. Radio Receiver R-1051H/URR, Parts List (Continued)

IF/AUDIO AMPLIFIER ASSEMBLY A2A2

REFERENCE DESIGNATION	NOTES	NAME AND DESCRIPTION	FIGURE NUMBER
A2A2A2T3		TRANSFORMER, RF, VARIABLE: 500 kHz; mfr 93292, part no. 500-1391, 06845, dwg 4032348-0703.	7-13
A2A2A2T4		TRANSFORMER, RF, VARIABLE: 600 kHz; mfr 93292, part no. 500-2392, 06845, dwg 4032348-0704.	7-13
A2A2A2T5		TRANSFORMER, AUDIO: Mrf 01961, part no. PE9334, 06845, dwg 4030818-0701.	7-13
A2A2A3		SSB/AM DETECTOR SUBASEMBLY: 2.40 in. long, 1.38 in. w, 0.78 in. thk; mfr 98738, part no. 01A226163-21-11. (Attaching Parts) AF(3) AL(3 CG(3) FF(2)	7-14
A2A2A3C1		CAPACITOR, FIXED, ELECTROLYTIC: 39 uF ±10%, 10 Vdc working; MIL type M39003/01-2979.	7-14
A2A2A3C2 and A2A2A3C3		CAPACITOR, FIXED, CERAMIC: 1500 pF ±20%, 200 Vdc working; MIL type M39014/02-1203.	7-14
A2A2A3C4		CAPACITOR, FIXED, ELECTROLYTIC: 39 uF ±10%, 10 Vdc working; MIL type M39003/01-2979.	7-14
A2A2A3C5		CAPACITOR: Item 19.	7-14
A2A2A3C6		CAPACITOR: Item 4.	7-14
A2A2A3C7		CAPACITOR, FIXED, CERAMIC: 2200 pF ±20%, 200 Vdc working; MIL type M39014/02-1207.	7-14
A2A2A3C8		CAPACITOR, FIXED, CERAMIC: 33 pF ±10%, 200 Vdc working; MIL type M39014/01-1210.	7-14
A2A2A3CR1 and A2A2A3CR2		SEMICONDUCTOR DEVICE, DIODE: MIL type JAN1N5711.	7-14
A2A2A3L1		INDUCTOR, RF, VARIABLE: 500 kHz, capacitance 863 pF ±5%, 0.422 in. dia, 0.490 in. h; mfr 93292, part no. 500-2360, 06845, dwg 4032540-0701.	7-14
A2A2A3MP1 thru A2A2A3MP3		MOUNTING PAD, ELECTRONIC: Diallyl phthalate, 0.344 in. dia, 0.095 in. thk; mfr 13103, part no. 7717-109, 98738, dwg 14S132171-39A-9	7-14
A2A2A3Q1 thru A2A2A3Q3		TRANSISTOR: Item 65.	7-14
A2A2A3R1		RESISTOR, FIXED, COMPOSITION: 27 ohm ±5%, ¼ w; MIL type RCR07G270JS.	7-14
A2A2A3R2		RESISTOR: Item 41.	7-14
A2A2A3R3		RESISTOR, FIXED, COMPOSITION: 27 ohm ±5%, ¼ w; MIL type RCR07G270JS.	7-14
A2A2A3R4		RESISTOR: Item 41.	7-14
A2A2A3R5		RESISTOR, FIXED, FILM: 2k ohm ±2%, ¼ w; MIL type RLR07C2001GR.	7-14

Table 7-2. Radio Receiver R-1051H/URR, Parts List (Continued)

IF/AUDIO AMPLIFIER ASSEMBLY A2A2

REFERENCE DESIGNATION	NOTES	NAME AND DESCRIPTION	FIGURE NUMBER
A2A2A3R6		RESISTOR: Item 39.	7-14
A2A2A3R7		RESISTOR: Item 37.	
A2A2A3T1		TRANSFORMER, AUDIO: 0.875 in. long, 0.781 in. w, 0.531 in. h; mfr 01961, part no. PE9335, 06845, dwg 4030818-0702.	7-14
A2A2A3TP1		CONNECTOR, ELECTRICAL, TEST-POINT TYPE: Item 20.	7-14
A2A3		Same as A2A2.	

Table 7-2. Radio Receiver R-1051H/URR, Parts List (Continued)

RF AMPLIFIER ASSEMBLY A2A4

REFERENCE DESIGNATION	NOTES	NAME AND DESCRIPTION	FIGURE NUMBER
A2A4		RF AMPLIFIER ASSEMBLY: 7.332 in. long, 7.432 in. w, 4.930 in. h; mfr 98738, part no. 01A226052-21-11. (Attaching Parts) CE(4)	7-15
A2A4B1		MOTOR ASSEMBLY: Mfr 06845, part no. 4032216-0501. (Attaching Parts) AU(2) AF(3)	7-16
A2A4C1		CAPACITOR, FIXED, MICA: 330 pF ±5%, 500 Vdc working; MIL type CMR05F331JPDM.	7-18H
A2A4C2		CAPACITOR: Item 16.	7-18B
A2A4C3		CAPACITOR, FIXED, CERAMIC: 0.01 uF ±20%, 500 Vdc working; MIL type CK63AW103M.	7-18G
A2A4C4		CAPACITOR: Item 16.	7-18B
A2A4C5		CAPACITOR, FIXED, MICA: 330 pF ±5%, 500 Vdc working; MIL type CMR05F331JPDM.	7-18H
A2A4C6		CAPACITOR: Item 16.	7-18B
A2A4C7		CAPACITOR, FIXED, CERAMIC: 0.01 uF ±20%, 500 Vdc working; MIL type CK63AW103M.	7-18D
A2A4C8		CAPACITOR, FIXED, MICA: 356 pF ±1%, 500 Vdc working; 0.470 in. long, 0.400 in. w, 0.220 in thk; mfr 98738, dwg 21P228300-48.	7-18E
A2A4C9		CAPACITOR, FIXED, MICA: 775 pF ±1%, 300 Vdc working; 0.470 in. long, 0.400 in. w, 0.230 in. thk; mfr 98738, dwg 21P228300-58.	7-18E
A2A4C10		CAPACITOR: Item 16.	7-18B
A2A4C11		CAPACITOR, FIXED, MICA: 356 pF ±1%, 500 Vdc working; 0.470 in. long, 0.400 in. w, 0.220 in. thk; mfr 98738, dwg 21P228300-48.	7-18G
A2A4C12		CAPACITOR, FIXED, MICA: 775 pF ±1%, 300 Vdc working; 0.470 in. long, 0.400 in. w, 0.230 in. thk; mfr 98738, dwg 21P228300-58.	7-18G
A2A4C13		CAPACITOR, FIXED, MICA: 356 pF ±1%, 500 Vdc working; 0.470 in. long, 0.400 in. w, 0.220 in. thk; mfr 98738, dwg 21P228300-48.	7-18C
A2A4C14		CAPACITOR, FIXED, MICA: 775 pF ±1%, 300 Vdc working; 0.470 in. long, 0.400 in. w, 0.230 in. thk; mfr 98738, dwg 21P228300-58.	7-18C
A2A4C15 thru A2A4C18		CAPACITOR: Item 16.	7-18B
A2A4C19		CAPACITOR, FIXED, MICA: 369 pF ±1%, 500 Vdc working; 0.470 in. long, 0.400 in. w, 0.220 in. thk; mfr 98738, dwg 21P228300-49.	7-18F
A2A4C20		CAPACITOR, FIXED, MICA: 784 pF ±1%, 300 Vdc working; 0.470 in. long, 0.400 in. w, 0.230 in. thk; mfr 98738, dwg 21P228300-59.	7-18F

Table 7-2. Radio Receiver R-1051H/URR, Parts List (Continued)

RF AMPLIFIER ASSEMBLY A2A4

REFERENCE DESIGNATION	NOTES	NAME AND DESCRIPTION	FIGURE NUMBER
A2A4C21 and A2A4C22		CAPACITOR: Item 15.	7-16
A2A4CR1		SEMICONDUCTOR DEVICE, DIODE: MIL type JAN1N3611.	7-16
A2A4E1		STATOR PLATE ASSEMBLY: Four contacts; 0.980 in. long, 0.60 in. w, 0.126 in. thk; mfr 98738, part no. 01A227173-24-11.	7-18J
A2A4E2		STATOR PLATE ASSEMBLY: Three contacts; mfr 98738, part no. 01A227173-37-11.	7-18E
A2A4E3		STATOR PLATE ASSEMBLY: Same as A2A4E1.	7-18G
A2A4E4		STATOR PLATE ASSEMBLY: One contact; mfr 98738, part no. 01A227173-38-11.	7-18G
A2A4E5		STATOR PLATE ASSEMBLY: Four contacts; mfr 98738, part no. 01A227173-23-11.	7-18C
A2A4E6 and A2A4E7		STATOR PLATE ASSEMBLY: Four contacts; mfr 98738, part no. 01A227173-35-11.	7-18J 7-18E,
A2A4E8		STATOR PLATE ASSEMBLY: Two contacts; mfr 98738, part no. 01A227173-31-11.	7-18G
A2A4E9 and A2A4E10		STATOR PLATE ASSEMBLY: Two contacts; mfr 98738, part no. 01A227173-36-11.	7-18J, 7-18E
A2A4E11		STATOR PLATE ASSEMBLY: Four contacts: mfr 98738, part no. 01A227173-35-11.	7-18G 7-18G
A2A2E12		STATOR PLATE ASSEMBLY: Two contacts; mfr 98738, part no. 01A227173-36-11.	7-18C
A2A4E13		STATOR PLATE ASSEMBLY: Four contacts; mfr 98738, part no. 01A227173-22-11.	7-18C
A2A4E14		TERMINAL, FEED-THRU: MIL type SE14XC04.	7-18E
A2A4E15 thru A2A4E18		TERMINAL, FEED-TRHU: MIL type FT049B01.	7-18G
A2A4E19		TERMINAL, STUD: MIL type SE079B01.	7-18H
A2A4E20 and A2A4E21		TERMINAL, STUD: MIL type SE12XC07.	7-18G
A2A4E22		TERMINAL, STUD: MIL type SE15XC04.	7-18C
A2A4E23		TERMINAL, STUD: MIL type SE12XC07.	7-18D
A2A4E24 thru A2A4E27		TERMINAL, FEED-THRU: MIL type FT049B01.	7-18C and 7-18B
A2A4E28		TERMINAL, STUD: MIL type MS17156-1.	7-18B
A2A4E29		TERMINAL, FEED-THRU: MIL type FT049B01.	7-18B
A2A4E30		TERMINAL, STUD: MIL type MS17156-1.	7-18B
A2A4E31		TERMINAL, LUG: 0.50 in. long; mfr 79963, part no. 75, 98738, dwg 29S111221-31.	7-16
A2A4E32 and A2A4E33		TERMINAL, LUG: MIL type MS35431-4. (Attaching Parts) AD(2)	7-18H
A2A4FL1 thru A2A4FL3		SUPPRESSOR, PARASITIC: 0.200 in. OD, 0.100 in. ID, 0.250 in. long; mfr 08832, part no. F754, 06845, dwg 4032581-0701.	7-18H 7-18C

Table 7-2. Radio Receiver R-1051H/URR, Parts List (Continued)

RF AMPLIFIER ASSEMBLY A2A4

REFERENCE DESIGNATION	NOTES	NAME AND DESCRIPTION	FIGURE NUMBER
A2A4K1		RELAY, ELECTRICAL: DPDT, 2 amp, MIL type M5757/10-039. (Attaching Parts) AA(2) AG(2) AQ(2)	7-16A-A
A2A4MP1		ROTOR DRIVE: Mfr 06845, dwg no. 4032239-0501, consists of A2A4MP2, MP3 and MP4. (Attaching Parts) CM(1)	7-15
A2A4MP2 and A2A4MP3		GEAR, SPUR: 170 teeth, 1.792 in. dia, 0.281 in. thk; mfr 06845, part no. 4030615-0701. (Attaching Parts) CL(2)	7-15
A2A4MP4		SHAFT, ROTOR: 0.1874 in. dia, 4.22 in. long; mfr 06845, part no. 4030639-0001. (Attaching Parts) FJ(1)	7-15
A2A4MP5		COVER: 7.432 in. long, 7.332 in. w, 4.430 in. h; mfr 98738, part no. 15P226217-21-11. (Attaching Parts) CE(4) AL(4) CG(4) AF(4)	7-15
A2A4MP6		POST: 3.783 in. long, 0.312 in. dia; mfr 06845, part no. 4032437-0501. (Attaching Parts) FK(1) DB(1)	7-15
A2A4MP7		SHIELD, NO. 1: 5.030 in. dia, 0.090 in. thk; mfr 98738, part no. 01A226698-21-11. (Attaching Parts) DB(3) CS(3) AB(2) M(2) L(2)	7-15
A2A4MP8		SPACER, COVER: 1.98 in. long, 0.62 in. w, 0.120 in. thk; mfr 06845, part no. 4032448-0001.	7-15
A2A4MP9 thru A2A4MP12		POST: 3.78 in. long, 0.188 in. hex; mfr 98738, part no. 47P228368-01.	7-15
A2A4MP13 thru A2A4MP17		CLAMP, RETAINER: 0.24 in. long, 0.28 in. w; 0.20 in. h; mfr 06845, part no. 4032108-0001. (Attaching Parts) AL(1) CQ(1)	7-15
A2A4MP18		CLAMP, RETAINER: 0.24 in. long, 0.28 in. w, 0.20 in. h; mfr 06845, part no. 4032108-0001. (Attaching Parts) AL(2) AD(1) DA(1)	7-15
A2A4MP19		BEARING, BALL, ANNULAR: Steel with bronze separator; mfr 32828, part no. 6905-1, 06845, dwg 4030764-0701.	7-15A-A
A2A4MP20 and A2A4MP21		Not used.	
A2A4MP22		RING, TURRET, TOP: Aluminum alloy: 6.80 in. OD, 5.28 in. ID, 0.125 in. thk; mfr 06845, part no. 4032294-0001 (Attaching Parts) AF(4)	7-15A-A
A2A4MP23		RING, TURRET BOTTOM: 6.80 in. OD, 5.28 in. ID, 0.125 in. thk; mfr 06845, part no. 4030947-0001.	7-15A-A
A2A4MP24		RING, SPACER: Nylon; 5.544 in. dia, 0.231 in. thk; mfr 98738, part no. 42P226779-21-11.	7-15A-A
A2A4MP25		Not used.	

Table 7-2. Radio Receiver R-1051H/URR, Parts List (Continued)

RF AMPLIFIER ASSEMBLY A2A4

REFERENCE DESIGNATION	NOTES	NAME AND DESCRIPTION	FIGURE NUMBER
A2A4MP26 thru A2A4MP29		BEARING, SLEEVE: Sintered metal, oil impregnated; 0.422 in. OD, 0.187 in. ID, 0.109 in. thk; mfr 12639, part no. 127-100, 06845, dwg 4030759-0701.	7-15, or 7-16
A2A4MP30		BRACKET, RELAY: 1.12 in. long, 1.74 in. w, 0.62 in. thk; mfr 06845, part no. 4032226-0001. (Attaching Parts) AJ(2) AK(2)	7-16A-A
A2A4MP31		BRUSH SET, ELECTRICAL CONTACT: Molded EPOXY, STAINLESS STEEL; 3.58 in. long; mfr 43710, part no. 1433, 06845, dwg no. 4032432-0701. (Attaching Parts) CN(2)	7-16
A2A4MP32 thru A2A4MP39		Not used.	
A2A4MP40		MOUNTING BASE, ELECTRICAL: Aluminum alloy, 7.322 in long, 7.322 in. w, mfr 98738, part no. 01A226431-21-11 (Attaching Parts) L(3) AB(3)	7-16
A2A4MP41 and A2A4MP42		CLAMP: 0.25 in. long, 0.178 in. w; mfr 06845, part no. 4032184-0001.	7-16
A2A4MP43		Not used.	
A2A4MP44 and A2A4MP45		GROMMET: MIL type MS35489-1.	7-16A-A
A2A4MP46		Not used.	
A2A4MP47		TUNING ROTOR: 3.00 in. dia, 4.22 in. long; mfr 98738, part no. 01A226092-21-11; Consists of A2A4MP48 thru A2A4MP58.	7-15
A2A4MP48		TOP ROTOR: Mfr 98738, part no. 01A226352-21-11. Consists of A2A4MP49, A2AA4A37 (Attaching Parts) CP(1)	7-21
A2A4MP49		HUB, TOP ROTOR: 1.00 in. OD, 0.40 in. long, 0.38 in. ID; mfr 98738, part no. 43P227263-21-11.	7-21
A2A4MP50		UPPER GEAR ROTOR: Mfr 98738, part no. 01A226349-21-11; Consists of A2A4MP51, A2A4A35 AND A2A4A36 (Attaching Parts) CM(2)	7-21
A2A4MP51	2	GEAR, SPUR: Mfr 98738, part no. 44P227260-22-11; Consists of A2A4MP51A AND A2A4MP51B	7-21
A2A4MP51A		GEAR: 170 teeth, 1.792 in. dia, 0.38 in. thk; mfr 98738, part no. 44P227260-23-11.	7-21
A2A4MP51B		BEARING, SLEEVE: MIL type MS17795-13.	7-21
A2A4MP52		CENTER ROTOR: Mfr 98738, part no. 01A226350-21-11; Consists of A2A4MP53, A2A4A33 and A2A4A34. (Attaching Parts) CP(1)	7-21

Table 7-2. Radio Receiver R-1051H/URR, Parts List (Continued)

RF AMPLIFIER ASSEMBLY A2A4

REFERENCE DESIGNATION	NOTES	NAME AND DESCRIPTION	FIGURE NUMBER
A2A4MP53		HUB, CENTER ROTOR: 1.79 in. dia, 0.74 in. thk. mfr 98738, part no. 43P227262-21-11;	7-21
A2A4MP54		LOWER GEAR ROTOR: Mfr 98738, part no. 01A226351-21-11; Consists of A2A4MP55, A2A4A31 and A2A4A32. (Attaching Parts) CM(2)	7-21
A2A4MP55		GEAR, SPUR: Mfr 98738, part no. 44P227260-22-11. Consists of A2A4MP55A and A2A4MP55B.	7-21 (see MP55A, B)
A2A4MP55A		GEAR: 170 teeth, 1.792 in. dia, 0.38 in. thk; mfr 98738, part no. 44P227260-23-11.	7-21
A2A4MP55B		BEARING, SLEEVE: MIL type MS17795-13.	7-21
A2A4MP56		BOTTOM ROTOR: Mfr 98738, part no. 01A226353-21-11; Consists of A2A4MP57 and A2A4A30. (Attaching Parts) CP(1)	7-21
A2A4MP57		HUB, BOTTOM ROTOR: 1.00 in. OD, 0.38 in. ID, 0.40 in. long; mfr 98738, part no. 43P227261-21-11.	7-21
A2A4MP58		SHAFT, ROTOR: 4.22 in. long, 0.1874 in. dia; mfr 98738, part no. 47P227268-01. (Attaching Parts) CM(1) FJ(1)	7-21
A2A4MP59		TURRET DRIVE GEAR ASSEMBLY: Mfr 06845, part no. 4032438-0501; consists of A2A4MP60 and A2A4MP61. (Attaching Parts) AD(4) AL(4) CG(4)	7-15A-A
A2A4MP60		GEAR, SPUR: Aluminum alloy, anodic coating; 7.208 in. dia, 0.265 in. thk; mfr 06845, part no. 4030614-0502.	7-19
A2A4MP61		CODING RING: Laminated epoxy, copper foil, one side, plated with rhodium; 7.06 in. dia, 0.062 in. thk; mfr 06845, part no. 4032447-0001.	7-19
A2A4MP62 and A2A4MP63		COUPLING ASSEMBLY: Mfr 98738, part no. 58A227169-21-11; Consists of A2A4MP64 thru A2A4MP66. (Attaching Parts) BD(1) CP(1)	7-15 (see also 7-17)
A2A4MP64		COUPLING, TOP: CRES, 0.875 in. dia, 0.382 in. thk; mfr 98738, part no. 58P227167-21-11.	7-17
A2A4MP65		DRIVE PIN: CRES, 0.0936 in. dia, 0.225 in. long; mfr 06845, part no. 4032181-0001.	7-17
A2A4MP66		HOLD DOWN SPRING: Half hard copper, 0.80 in. long, 0.015 in. thk; mfr 06845, part no. 4032183-0001. (Attaching Parts) G(2) CR(2)	7-17
A2A4MP67		SHIELD ASSEMBLY, NO. 2: Mfr 98738, part no. 01A226220-21-11; Consists of A2A4MP68 thru A2A4MP71.	7-18D

Table 7-2. Radio Receiver R-1051H/URR, Parts List (Continued)

RF AMPLIFIER ASSEMBLY A2A4

REFERENCE DESIGNATION	NOTES	NAME AND DESCRIPTION	FIGURE NUMBER
A2A4MP68		SHIELD, NO. 2: Aluminum alloy, approx. 5.0 in. long, 2.80 in. w, 0.063 in. thk; mfr 98738, part no. 64P226356-21-11.	7-18D
A2A4MP69		FASTENER: CRES, 0.187 in. sq, 0.360 in. long; mfr 06845, part no. 4032145-0001. (Attaching Parts) CT(1)	7-18C
A2A4MP70 and A2A4MP71		SPRING, GROUNDING: Copper, silver plated; approx. 1.60 in. long, 0.725 in. w, 0.005 in. thk; mfr 98738, part no. 41P226219-21-11.	7-18C
A2A4MP72		SHIELD ASSEMBLY, NO. 3: Mfr 98738, part no. 01A226223-21-11; Consists of A2A4MP73 thru A2A4MP77.	7-18G
A2A4MP73		SHIELD SUBASSEMBLY, NO. 3: Mfr 98738, part no. 01A226222-22-11; Consists of A2A4MP78 thru A2A4MP80.	7-18H
A2A4MP74		SHIELD, TUBE SOCKET: Brass, silver plated; 1.24 in. long, 1.10 in. w, 0.020 in. thk; includes terminals; mfr 06845, part no. 4032213-0501.	7-18B 7-18B
A2A4MP75		SHIELD, TUBE SOCKET: Brass, silver plated; 1.24 in. long, 1.10 in. w, 0.020 in. thk; includes terminals; mfr 06845, part no. 4032213-0502.	7-18B
A2A4MP76 and A2A4MP77		Not used.	
A2A4MP78		SHIELD, NO. 3: Aluminum alloy; aprox. 5.0 in. long, 2.80 in. w, 0.063 in. thk; mfr 06845, part no. 4032525-0001.	7-18H
A2A4MP79		FASTENER: CRES, 0.187 in. sq, 0.360 in. long; mfr 06845, part no. 4032145-0001. (Attaching Parts) CT(1)	7-18G
A2A4MP80		SPRING, GROUNDING: Copper, silver plated; approx. 1.60 in. long, 0.725 in. w, 0.005 in. thk; mfr 98738, part no. 41P226219-21-11.	7-18G
A2A4MP81		SHIELD ASSEMBLY, NO. 4: Mfr 98738, part no. 01A226221-21-11; Consists of A2A4MP82 thru A2A4MP85.	7-18F
A2A4MP82		SHIELD NO. 4: Aluminum alloy, silver plated, approx. 4.0 in. long, 1.75 in. w, 0.063 in. thk; mfr 06845, part no. 4032229-0001.	7-18E
A2A4MP83		FASTENER: CRES, 0.187 in. sq, 0.360 in. long; mfr 06845, part no. 4032145-0001.	7-18E
A2A4MP84 and A2A4MP85		SPRING, GROUNDING: Copper, silver plated; approx. 1.60 in. long, 0.725 in. w, 0.005 in. thk; mfr 98738, part no. 41P226219-21-11.	7-18E

Table 7-2. Radio Receiver R-1051H/URR, Parts List (Continued)

RF AMPLIFIER ASSEMBLY A2A4

REFERENCE DESIGNATION	NOTES	NAME AND DESCRIPTION	FIGURE NUMBER
A2A4MP86		SHIELD, NO. 5: Aluminum alloy; approx. 5.0 in. long, 2.75 in. w, 0.063 in. thk; mfr 06845, part no. 4032231-0501. (Attaching Parts) M(3) DB(3)	7-18J
A2A4MP87		SHIELD, INSULATED: Brass base with nylon insulator; 2.70 in. long, 1.54 in. w, 0.070 in. thk; mfr 06845, part no. 4016866-0501.	7-18C
A2A4MP88		CLAMP, LOOP: Nylon, 0.480 in. long, 0.230 in. w; mfr 95987, part no. 1-16-2NA, 06845, dwg 4032230-0701. (Attaching Parts) CJ(1)	7-18J
A2A4MP89 and A2A4MP90		SHIELD, ELECTRON TUBE: aluminum with cadmium plated copper liner; 0.875 in. dia, 1.875 in. long; mfr 98978, part no. TR5-5020-21B, 06845, dwg 4032212-0701.	7-18C
A2A4MP91 thru A2A4MP96		SPACER: Aluminum alloy; hexagonal, 0.250 in. across flats, 0.883 in. long, 0.159 in. ID; mfr 06845, part no. 4032191-0001.	7-18A
A2A4MP97		SPACER, THREADED: Aluminum alloy; hexagonal, 0.25 in. across flats, 0.88 in. long, 6-32 NC-2B int. threads, mfr 06845, part no. 4032113-001. (Attaching Parts) M(2) ER(2)	7-18A
A2A4MP98 thru A2A4MP103		SPACER, THREADED: Aluminum alloy, hexagonal, 0.250 in. across flats, 0.883 in. long, 6-32 NC-2B int. threads; mfr 06845, part no. 4032113-0001.	7-18A
A2A4MP104 thru A2A4MP106		ROD, THREADED: CRES; 2.82 in. long, 6-32 UNC-2A threads; mfr 06845, part no. 4032449-0001.	7-18A
A2A4MP107 thru A2A4MP119		Not used.	
A2A4MP120		RETAINER: Beryllium copper; 1.38 in. long, 1.00 in. w, 0.050 in. thk; mfr 98738, part no. 42P227163-21-11. (Attaching Parts) DB(1)	7-15
A2A4P1		CONNECTOR, RECEPTACLE, ELECTRICAL: 15 pin contacts; 1.541 in. long, 0.494 in. w, 0.422 in. dia; mfr 71785, part no. DAMM15P, 06845, dwg 4032484-0703.	7-16
A2A4P2		CONNECTOR, RECEPTACLE, ELECTRICAL: 17 contacts including 5 coaxial; 2.729 in. long, 0.494 in. w, 0.429 in. thk; mfr 71785, part no. DCMME17W5P, 06845, dwg 4032484-0718. (Attaching Parts) CF(2)	7-16

Table 7-2. Radio Receiver R-1051H/URR, Parts List (Continued)

RF AMPLIFIER ASSEMBLY A2A4

REFERENCE DESIGNATION	NOTES	NAME AND DESCRIPTION	FIGURE NUMBER
A2A4P2A1 thru A2A4P2A3		CONNECTOR, PLUG, ELECTRICAL: 0.734 in. long, 0.530 in. w, 0.045 in. dia; mfr 71785, part no. 318-11-99-284, 06845, dwg 4032484-0730.	7-16
A2A4P2A4		Not used.	
A2A4P2A5		CONNECTOR, PLUG, ELECTRICAL: 0.734 in. long, 0.530 in. w, 0.045 in. dia; mfr 71785, part no. 318-11-99-284, 06845, dwg 4032484-0730.	7-16
A2A4R1		RESISTOR: Item 56.	7-18B
A2A4R2		RESISTOR: Item 59.	7-18B
A2A4R3		RESISTOR: Item 39.	7-18B
A2A4S1		SWITCH: Consists of MP31, MP41 and MP42.	7-16
A2A4TP1		CONNECTOR, ELECTRICAL, TEST-POINT TYPE: MIL type M39024-12-03.	7-18C
A2A4TP2 and A2A4TP3		CONNECTOR, ELECTRICAL, TEST-POINT TYPE: MIL type M39024-12-01.	7-18C, 7-15
A2A4TP4		CONNECTOR, ELECTRICAL, TEST-POINT TYPE: MIL type M39024-12-03.	7-15
A2A4V1		ELECTRON TUBE: MIL type JAN6BZ6.	7-18C
A2A4V2		ELECTRON TUBE: MIL type JAN6AN5WA.	7-18C
A2A4W1		CABLE ASSEMBLY, RF; 5.75 in. long; mfr 98738, part no. 30A226790-26-11. Connects to A2A4P2.	7-16
A2A4W2		CABLE ASSEMBLY, RF: 7.50 in. long; mfr 98738, part no. 30A226482-45-11. Connects to A2A4P2.	7-16
A2A4W3 and A2A4W4		CABLE ASSEMBLY, RF: 4.00 in. long; mfr 98738, part no. 30A226482-33-11. Connects to A2A4P2.	7-16
A2A4XV1 and A2A4XV2		SOCKET, ELECTRON TUBE: 1.19 in. long, 0.625 in. dia; mfr 91662, part no. 05-0715-03, 06845, dwg 4032578-0701. (Attaching Parts AQ(2) AL(2) AD(2)	7-18G
A2A4A1		RF AMPLIFIER SUBASSEMBLY: 1.901 in. long, 2.38 in. w; mfr 98738, part no. 01A226169-21-11. (Attaching Parts) AL(2) AU(2) CW(2)	7-18J and 7-20
A2A4A1C1		CAPACITOR: Item 16.	7-20
A2A4A1C2 and A2A4A1C3		CAPACITOR, FIXED, ELECTROLYTIC: 15 uF ±20, 20 Vdc working; MIL type M39003/01-2290.	7-20
A2A4A1C4		CAPACITOR, FIXED, CERAMIC: 1000 pF ±10%, 200 Vdc working; MIL type M39014/01-1237.	7-20
A2A4A1E1 thru A2A4A1E8		Not used. (Wiring terminations for reference only).	
A2A4A1E9		TERMINAL, STUD: 0.240 in. long, 0.062 in. dia; mfr 88245, part no. 2031B1, 98738, dwg 29P239053-21-11.	7-20

Table 7-2. Radio Receiver R-1051H/URR, Parts List (Continued)

RF AMPLIFIER ASSEMBLY A2A4

REFERENCE DESIGNATION	NOTES	NAME AND DESCRIPTION	FIGURE NUMBER
A2A4A1R1		RESISTOR, FIXED, COMPOSITION: 100k ohm ±5%, ¼ w; MIL type RCR07G104JS.	7-20
A2A4A1R2		RESISTOR: Item 38.	7-20
A2A4A1R3		RESISTOR, FIXED, COMPOSITION: 150 ohm ±5%, ¼ w; MIL type RCR07G151JS.	7-20
A2A4A1R4		RESISTOR, FIXED, FILM: 620 ohm ±2%, ½ w; MIL type RLR20C6200GR.	7-20
A2A4A1R5 and A2A4A1R6		RESISTOR, FIXED, COMPOSITION: 120 ohm ±2%, ½ w; MIL type RCR20G121JS.	7-20
A2A4A2		12 MHZ SUBASSEMBLY : 3.90 in. long, 0.625 in. w; 1.12 in. h; mfr 98738, part no. 01A226316-21-11.	7-22
A2A4A2C1		CAPACITOR: Item 10.	7-22
A2A4A2C2		CAPACITOR, FIXED, MICA: 126 pF ±1%, 500 Vdc working; 0.460 in. long, 0.370 in. w, 0.180 in. thk mfr 98738, dwg 21P228300-10.	7-22
A2A4A2C3		CAPACITOR, FIXED, MICA: 132 pF ±1%, 500 Vdc working; 0.460 in. long, 0.370 in. w, 0.190 in. thk; mfr 98738, dwg 21P228300-13.	7-22
A2A4A2C4		CAPACITOR, FIXED, MICA: 250 pF ±1%, 500 Vdc working; 0.470 in. long, 0.390 in. w, 0.210 in. thk; mfr 98738, dwg 21P228300-39.	7-22
A2A4A2E1		BLOCK, CONTACT: Item 1.	7-22
A2A4A2T1		TRANSFORMER, RF, VARIABLE: 12 MHz, capacitance 118 pF ±5%, 0.422 in. dia, 0.490 in. long; mfr 93292, part no. 500-2411, 06845, dwg 4032167-0711.	7-22
A2A4A2T2		COIL, RF, VARIABLE: 12 MHz, capacitance 135 pF, mfr 93292, part no. 500-2511, mfr 06845, dwg 4032521-0711.	7-22
A2A4A2T3		TRANSFORMER, RF, VARIABLE: 7 MHz, capacitance 196.0 pF; 0.422 in. dia. 0.490 in. long; mfr 93292, part no. 500-2606, 06845, dwg 4032522-0706.	7-22
A2A4A2T4		TRANSFORMER, RF, VARIABLE: 2 MHz, capacitance 754 pF; 0.390 in. dia, 0.531 in. long; mfr 93292, part no. 500-2701, 06845, dwg 4032523-0701.	7-22
A2A4A3		13 MHZ SUBASSEMBLY: 3.90 in. long, 0.625 in. w, mfr 98738, part no. 01A226327-21-11.	7-23
A2A4A3C1		CAPACITOR: Item 10.	7-23

Table 7-2. Radio Receiver R-1051H/URR, Parts List (Continued)

RF AMPLIFIER ASSEMBLY A2A4

REFERENCE DESIGNATION	NOTES	NAME AND DESCRIPTION	FIGURE NUMBER
A2A4A3C2		CAPACITOR, FIXED, MICA: 115 pF ±1%, 500 Vdc working; 0.460 in. long, 0.370 in. w; 0.180 in. thk; mfr 98738, dwg 21P228300-06.	7-23
A2A4A3C3		CAPACITOR, FIXED, MICA: 120 pF ±1%, 500 Vdc working; 0.460 in. long, 0.370 in. w, 0.160 in. thk; mfr 98738, dwg 21P228300-07.	7-23
A2A4A3C4		CAPACITOR, FIXED, MICA: 208 pF ±1%, 500 Vdc working; 0.460 in. long, 0.380 in. w, 0.200 in. thk; mfr 98738, dwg 21P228300-32.	7-23
A2A4A3C5		CAPACITOR, FIXED, MICA: 1250 pF ±1%, 300 Vdc working; 0.750 in. long, 0.510 in. w, 0.200 in. thk mfr 98738, dwg 21P228301-01.	7-23
A2A4A3E1		BLOCK, CONTACT: Item 1.	7-23
A2A4A3T1		TRANSFORMER, RF, VARIABLE: 13 MHz, capacitance 109 pF ±5%, 0.422 in. dia; 0.490 in. long; mfr 93292, part no. 500-2412; 06845, dwg 4032167-0712.	7-23
A2A4A3T2		COIL, RF, VARIABLE: 13 MHz, capacitance 126.7 pF ±5%, 0.422 in. dia, 0.490 in. long; mfr 93292, part no. 500-2512, 06845, dwg 4032521-0712.	7-23
A2A4A3T3		TRANSFORMER, RF, VARIABLE: 8 MHz, capacitance 170.0 pF; 0.422 in. dia, 0.490 in. long; mfr 93292, part no. 500-2627, 06845, dwg 4032522-0727.	7-23
A2A4A3T4		TRANSFORMER, RF, VARIABLE: 3 MHz, capacitance 482 pF; 0.390 in. dia. 0.531 in. long; mfr 93292, part no. 500-2702, 06845, dwg 4032523-0702.	7-23
A2A4A4		14 MHZ SUBASSEMBLY: 3.90 in. long, 0.625 in. w, 1.12 in. h; mfr 98738, dwg 01A226328-21-11.	7-24
A2A4A4C1		CAPACITOR: Item 10.	7-24
A2A4A4C2		CAPACITOR, FIXED, MICA: 105 pF ±1%, 500 Vdc working; 0.460 in. long, 0.370 in. w, 0.180 in. thk; mfr 98738, dwg 21P228300-02.	7-24
A2A4A4C3		CAPACITOR, FIXED, MICA: 111 pF ±1%, 500 Vdc working; 0.460 in. long, 0.370 in. w, 0.180 in. thk; mfr 98738, dwg 21P228300-05.	7-24
A2A4A4C4		CAPACITOR, FIXED, MICA: 179 pF ±1%, 500 Vdc working, 0.460 in. long, 0.370 in. w, 0.190 in. thk; mfr 98738, dwg 21P228300-25.	7-24
A2A4A4C5		CAPACITOR, FIXED, MICA: 629 pF ±1%, 300 Vdc working; 0.470 in. long, 0.390 in. w, 0.210 in. thk; mfr 98738, dwg 21P228300-57.	7-24
A2A4A4E1		BLOCK, CONTACT: Item 1.	7-24

Table 7-2. Radio Receiver R-1051H/URR, Parts List (Continued)

RF AMPLIFIER ASSEMBLY A2A4

REFERENCE DESIGNATION	NOTES	NAME AND DESCRIPTION	FIGURE NUMBER
A2A4A4T1		TRANSFORMER, RF, VARIABLE: 14 Mhz, capacitance 101 pF ±5%, 0.422 in. dia, 0.490 in. long; mfr 93292, part no. 500-2413, 06845, dwg 4032167-0713.	7-24
A2A4A4T2		COIL, RF, VARIABLE: 14 MHz, capacitance 119.5 pF ±5%, 0.422 in. dia, 0.490 in. long, mfr 93292, part no. 500-2513, 06845, dwg 4032521-0713.	7-24
A2A4A4T3		TRANSFORMER, RF, VARIABLE: 9 MHz, capacitance 152.0 pF; 0.422 in. dia; 0.490 in. long; mfr 93292, part no. 500-2607, 06845, dwg 4032522-0707.	7-24
A2A4A4T4		TRANSFORMER, RF, VARIABLE: 4 Mhz, capacitance 358 pf; 0.390 in, dia, 0.531 in. long; mfr 93292, part no. 500-2703, 06845, dwg 4032523-0703.	7-24
A2A4A5		15MHZ SUBASSEMBLY: 3.90 in. long, 0.625 in. w, 1.12 in. h; mfr 98738, dwg 01A226317-21-11.	7-25
A2A4A5C1		CAPACITOR: Item 9.	7-25
A2A4A5C2		CAPACITOR, FIXED, MICA: 97 pF ±1%, 500 Vdc working; 0.460 in. long, 0.360 in. w, 0.180 in. thk; mfr 06845, dwg 4031978-0738.	7-25
A2A4A5C3		CAPACITOR, FIXED, MICA: 103 pF ±1%, 500 Vdc working; 0.460 in. long, 0.370 in. w, 0.180 in. thk; mfr 98738, dwg 21P228300-01.	7-25
A2A4A5C4		CAPACITOR, FIXED, MICA: 157 pF ±1%, 500 Vdc working; 0.460 in. long, 0.370 in. w, 0.190 in. thk; mfr 98738, dwg 21P228300-20.	7-25
A2A4A5C5		CAPACITOR, FIXED, MICA: 422 pf ±1%, 300 Vdc working; 0.460 in. long, 0.380 in. w, 0.200 in. thk; mfr 98738, dwg 21P228300-52.	7-25
A2A4A5E1		BLOCK, CONTACT: Item 1.	7-25
A2A4A5T1		TRANSFORMER, RF, VARIABLE: 15 MHz, capacitance 94.5 pF ±5%, 0.422 in. dia, 0.490 in. long; mfr 93292, part no. 500-2414, 06845, dwg 4032167-0714.	7-25
A2A4A5T2		COIL, RF, VARIABLE: 15 MHz, capacitance 113 pF ±5%, 0.422 in. dia, 0.490 in. long; mfr 93292, part no. 500-2514, 06845, dwg 4032521-0714.	7-25
A2A4A5T3		TRANSFORMER, RF, VARIABLE: 10 MHz, capacitance 137.0 pf; 0.422 in. dia, 0.490 in. long; mfr 93292, part no. 500-2608, 06845, dwg 4032522-0708	7-25

Table 7-2. Radio Receiver R-1051H/URR, Parts List (Continued)

RF AMPLIFIER ASSEMBLY A2A4

REFERENCE DESIGNATION	NOTES	NAME AND DESCRIPTION	FIGURE NUMBER
A2A4A5T4		TRANSFORMER, RF, VARIABLE: 5 MHz, capacitance 286 pF; 0.390 in. dia, 0.531 in. long; mfr 93292, part no. 500-2704, 06845, dwg 4032523-0704.	7-25
A2A4A6		16 MHZ SUBASSEMBLY: 3.90 in. long, 0.625 in. w; 1.12 in. h; mfr 98738, part no. 01A226329-21-11.	7-26
A2A4A6C1		CAPACITOR: Item 9.	7-26
A2A4A6C2		CAPACITOR, FIXED, MICA: 91 pF ±1%, 500 Vdc working; 0.460 in. long, 0.360 in. w, 0.180 in. thk; mfr 06845, dwg 4032978-0735.	7-26
A2A4A6C3		CAPACITOR, FIXED, MICA: 96 pF ±1%, 500 Vdc working; 0.460 in. long, 0.360 in. w, 0.180 in. thk; mfr 06845, dwg 4031978-0737.	7-26
A2A4A6C4		CAPACITOR, FIXED, MICA: 140 pF ±1%, 500 Vdc working; 0.460 in. long, 0.370 in. w, 0.190 in. thk; mfr 98738, dwg 21P228300-15.	7-26
A2A4A6C5		CAPACITOR, FIXED, MICA: 318 pF ±1%, 500 Vdc working; 0.470 in. long, 0.390 in. w, 0.210 in. thk; mfr 98738, dwg 21P228300-46.	7-26
A2A4A6E1		BLOCK, CONTACT: Item 1.	7-26
A2A4A6T1		TRANSFORMER, RF, VARIABLE: 16 MHz, capacitance 89 pF ±5%, 0.422 in. dia, 0.490 in. long; mfr 93292, part no. 500-2415, 06845, dwg 4032167-0715.	7-26
A2A4A6T2		COIL, RF, VARIABLE: 16 MHz, capacitance 107.5 pF ±5%, 0.422 in. dia 0.490 in. long; mfr 93292, part no. 500-2515, 06845, dwg 4032521-0715.	7-26
A2A4A6T3		TRANSFORMER, RF, VARIABLE: 11 MHz capacitance 125.0 pf; 0.422 in. dia, 0.490 in. long; mfr 93292, part no. 500-2609, 06845, dwg 4032522-0709.	7-26
A2A4A6T4		TRANSFORMER, RF, VARIABLE: 6 MHZ, capacitance 240 pf; 0.390 in. dia, 0.531 in. long; mfr 93292, part no. 500-2705, 06845, dwg 4032523-0705.	7-26
A2A4A7		17 MHZ SUBASSEMBLY: 390 in. long, 0.625 in. w, 1.12 in. h; mfr 98738, part no. 01A226318-21-11.	7-27
A2A4A7C1		CAPACITOR: Item 9.	7-27

Table 7-2. Radio Receiver R-1051H/URR, Parts List (Continued)

RF AMPLIFIER ASSEMBLY A2A4

REFERENCE DESIGNATION	NOTES	NAME AND DESCRIPTION	FIGURE NUMBER
A2A4A7C2		CAPACITOR, FIXED, MICA: 85 pF ±1%, 500 Vdc working; 0.460 in. long, 0.360 in. w, 0.180 in. thk; mfr 06845, dwg 4031978-0733.	7-27
A2A4A7C3		CAPACITOR, FIXED, MICA: 90 pF ±1%, 500 Vdc working; 0.460 in. long, 0.360 in. w, 0.180 in. thk; mfr 98738, dwg 21P228300-10.	7-27
A2A4A7C4		CAPACITOR, FIXED, MICA: 126 pF ±1%, 500 Vdc working; 0.460 in. long, 0.370 in. w, 0.180 in. thk; mfr 98738, dwg 21P228300-10.	7-27
A2A4A7C5		CAPACITOR, FIXED, MICA: 256 pF ±1%, 500 Vdc working; 0.470 in. long, 0.380 in. w, 0.200 in. thk; mfr 98738, dwg 21P228300-41.	7-27
A2A4A7E1		BLOCK, CONTACT: Item 1.	7-27
A2A4A7T1		TRANSFORMER, RF, VARIABLE: 17 MHz, capacitance 83.8 pF ±5%, 0.422 in. dia, 0.490 in. long; mfr 93292, part no. 500-2416, 06845, dwg 4032167-0716.	7-27
A2A4A7T2		COIL, RF, VARIABLE: 17 MHz, capacitance 102.5 pF ±5%, 0.422 in. dia, 0.490 in. long; mfr 93292, part no. 500-2516, 06845, dwg 4032521-0716.	7-27
A2A4A7T3		TRANSFORMER, RF, VARIABLE: 12 MHz, capacitance 115.0 pF; 0.422 in. dia, 0.490 in. long; mfr 93292, part no. 500-2610, 06845, dwg 4032522-0710.	7-27
A2A4A7T4		TRANSFORMER, RF, VARIABLE: 7 MHz, capacitance 208 pF; 0.390 in. dia, 0.531 in. long; mfr 93292, part no. 500-2076, 06845, dwg 4032523-0706.	7-27
A2A4A8		18 MHZ SUBASSEMBLY: 3.90 in. long, 0.0625 in. w, 1.12 in. thk; mfr 98738, part no. 01A226319-21-11.	7-28
A2A4A8C1		CAPACITOR: Item 9.	7-28
A2A4A8C2		CAPACITOR, FIXED, MICA: 80 pF ±1%, 500 Vdc working; 0.450 in. long, 0.360 in. w, 0.180 in. thk; mfr 06845, dwg 4031978-0731.	7-28
A2A4A8C3		CAPACITOR, FIXED, MICA: 85 pf ±1%, 500 Vdc working; 0.460 in. long, 0.360 in. w, 0.180 in. thk; mfr 06845, dwg 4031978-0733.	7-28
A2A4A8C4		CAPACITOR, FIXED, MICA: 115 pF ±1%, 500 Vdc working; 0.460 in. long, 0.370 in. w, 0.180 in. thk; mfr 98738, dwg 21P228300-06.	7-28
A2A4A8C5		CAPACITOR, FIXED, MICA: 214 pF ±1%, 500 Vdc working; 0.460 in. long, 0.30 in. w; 0.200 in. thk; mfr 98738, dwg 21P228300-33.	7-28
A2A4A8E1		BLOCK, CONTACT: Item 1.	7-28

Table 7-2. Radio Receiver R-1051H/URR, Parts List (Continued)

RF AMPLIFIER ASSEMBLY A2A4

REFERENCE DESIGNATION	NOTES	NAME AND DESCRIPTION	FIGURE NUMBER
A2A4A8T1		TRANSFORMER, RF, VARIABLE: 18 MHz, capacitance 79.5 pF ±5%, 0.422 in. dia, 0.490 in. long; mfr 93292, part no. 500-2417, 06845, dwg 4032167-0717.	7-28
A2A4A8T2		COIL, RF, VARIABLE: 18 MHz, capacitance 98.5 pF ±5%, 0.422 in. dia, 0.490 in. long; mfr 93292, part no. 500-2517, 06845, dwg 4032521-0717.	7-28
A2A4A8T3		TRANSFORMER, RF, VARIABLE: 13 MHz, capacitance 107.0 pF; 0.422 in. dia, 0.490 in. long; mfr 93292, part no. 500-2611, 06845, dwg 4032522-0711.	7-28
A2A4A8T4		TRANSFORMER, RF, VARIABLE: 8 MHz, capacitance 185 pF; 0.390 in. dia, 0.531 in. long; mfr 93292, part no. 500-2707, 06845, dwg 4032523-0707.	7-28
A2A4A9		19 MHZ SUBASSEMBLY: 3.90 in. long, 0.625 in. w, 1.12 in. h; mfr 98738, part no. 01A226320-21-11.	7-29
A2A4A9C1		CAPACITOR: Item 9.	7-29
A2A4A9C2		CAPACITOR, FIXED, MICA: 75 pF ±1%, 500 Vdc working; 0.450 in. long, 3.60 in. w, 0.180 in. thk; mfr 06845, dwg 4031978-0729.	7-29
A2A4A9C3		CAPACITOR, FIXED, MICA: 80 pf ±1%, 500 Vdc working; 0.450 in. long, 0.360 in. w, 0.180 in. thk; mfr 06845, dwg 4031978-0731.	7-29
A2A4A9C4		CAPACITOR, FIXED, MICA; 105 pF ±1%, 500 Vdc working, 0.460 in. long, 0.370 in. w, 0.180 in. thk; mfr 98738, dwg 21P228300-02.	7-29
A2A4A9C5		CAPACITOR, FIXED, MICA: 185 pF ±1%, 500 Vdc working, 0.460 in. long, 0.380 in. w, 0.190 in. thk; mfr 98738, dwg 21P228300-27.	7-29
A2A4A9E1		BLOCK, CONTACT: Item 1.	7-29
A2A4A9T1		TRANSFORMER, RF, VARIABLE: 19 MHz, capacitance 75.0 pF ±5%, 0.422 in. dia, 0.490 in. long; mfr 93292, part no. 500-2418, 06845, dwg 4032167-0718.	7-29
A2A4A9T2		COIL, RF, VARIABLE: 19 MHz, capacitance 96.5 pF ±5%; 0.422 in. dia, 0.490 in. long; mfr 93292, part no. 500-2518, 06845, dwg 4032521-0718.	7-29
A2A4A9T3		TRANSFORMER, RF, VARIABLE: 14 MHz, capacitance 101.0 pf; 0.422 in. dia, 0.490 in. long; mfr 93292, part no. 500-2612, 06845, dwg 4032522-0712.	7-29

Table 7-2. Radio Receiver R-1051H/URR, Parts List (Continued)

RF AMPLIFIER ASSEMBLY A2A4

REFERENCE DESIGNATION	NOTES	NAME AND DESCRIPTION	FIGURE NUMBER
A2A4A9T4		TRANSFORMER, RF, VARIABLE: 9 MHz, capacitance 166 pF; 0.390 in. dia, 0.531 in. long; mfr 93292, part no. 500-2708, 06845, dwg 4032523-0708.	7-29
A2A4A9Y1		CRYSTAL UNIT, QUARTZ: Frequency 21.000 MHz; 0.515 in. long, 0.418 in. w, 0.166 in. thk; mfr 00136, part no. M20-21-000MHZ, 06845, dwg 4032119-0702.	7-29
A2A4A10		20 MHZ SUBASSEMBLY: 3.90 in. long, 0.625 in. w, 1.12 in. h; mfr 98738, part no. 01A226321-21-11.	7-30
A2A4A10C1		CAPACITOR: Item 9.	7-30
A2A4A10C2		CAPACITOR, FIXED, MICA: 71 pF ±1%, 500 Vdc working; 0.450 in. long, 0.360 in. w, 0.180 in. thk; mfr 06845, dwg 4031978-0725.	7-30
A2A4A10C3		CAPACITOR, FIXED, MICA: 76 pF ±1%, 500 Vdc working; 0.450 in. long, 0.360 in. w, 0.180 in. thk; mfr 06845, dwg 4031978-0730.	7-30
A2A4A10C4		CAPACITOR, FIXED, MICA: 97 pF ±1%, 500 Vdc working; 0.460 in. long, 0.360 in. w, 0.180 in. thk; mfr 06845, dwg 4031978-0738.	7-30
A2A4A10C5		CAPACITOR, FIXED, MICA: 163 pf ±1%, 500 Vdc working, 0.460 in. long, 0.370 in. w, 0.190 in. thk; mfr 98738, dwg 21P228300-22.	7-30
A2A4A10E1		BLOCK, CONTACT: Item 1.	7-30
A2A4A10T1		TRANSFORMER, RF, VARIABLE: 20 MHz, capacitance 73.3 pf ±5%, 0.422 in. dia, 0.490 in. long; mfr 93292, part no. 500-2419, 06845, dwg 4032167-0719.	7-30
A2A4A10T2		COIL, RF, VARIABLE: 20 MHz, capacitance 90.3 pF ±5%, 0.422 in. dia, 0.490 in. long; mfr 93292, part no. 500-2519, 06845, dwg 4032521-0719..	7-30
A2A4A10T3		TRANSFORMER, RF, VARIABLE: 15 MHz, capacitance 95.0 pF; 0.422 in. dia, 0.490 in. long; mfr 93292, part no. 500-2613, 06845, dwg 4032522-0713.	7-30
A2A4A10T4		TRANSFORMER, RF, VARIABLE: 10 MHz, capacitance 152 pF; 0.390 in. dia, 0.390 in. long; mfr 93292, part no. 500-2709, 06845, dwg 4032523-0709.	7-30
A2A4A10Y1		CRYSTAL UNIT, QUARTZ: Frequency 19 MHz; 0.515 in. long, 0.418 in. w, 0.166 in. thk; mfr 00136, part no. M20-19-000MHz, 06845, dwg 4032119-0701.	7-30

Table 7-2. Radio Receiver R-1051H/URR, Parts List (Continued)

RF AMPLIFIER ASSEMBLY A2A4

REFERENCE DESIGNATION	NOTES	NAME AND DESCRIPTION	FIGURE NUMBER
A2A4A11		21 MHZ SUBASSEMBLY: 3.90 in. long, 0.625 in. w, 1.12 in. h; mfr 98738, part no. 01A226322-21-11.	7-31
A2A4A11C1		CAPACITOR: Item 9.	7-31
A2A4A11C2		CAPACITOR, FIXED MICA: 67 pF ±1%, 500 Vdc working; 0.450 in long, 0.360 in. dia, 0.180 in. thk; mfr 06845, dwg 4031978-0722.	7-31
A2A4A11C3		CAPACITOR, FIXED, MICA; 73 pF ±1%, 500 Vdc working; 0.450 in. long, 0.360 in. dia, 0.180 in. thk; mfr 06845, dwg 4031978-0727.	7-31
A2A4A11C4		CAPACITOR, FIXED, MICA: 91 pF ±1%, 500 Vdc working; 0.460 in. long, 0.360 in. w, 0.180 in. thk; mfr 06845, dwg 4031978-0735.	7-31
A2A4A11C5		CAPACITOR, FIXED, MICA: 146 pF ±%, 500 Vdc working; 0.460 in. long, 0.360 in. w, 0.190 in. thk; mfr 98738, dwg 21P228300-18.	7-31
A2A4A11E1		BLOCK CONTACT: Item 1.	7-31
A2A4A11T1		TRANSFORMER, RF, VARIABLE: 21 MHz, capacitance 70.2 pF ±5%, 0.422 in. dia, 0.490 in. long; mfr 93292, part no. 500-2420, 06845, dwg 4032167-0720.	7-31
A2A4A11T2		COIL, RF, VARIABLE: 21 MHz, capacitance 88 pF ±5%, 0.422 in. dia, 0.490 in. long; mfr 93292, part no. 500-2520, 06845, dwg 4032521-0720.	7-31
A2A4A11T3		TRANSFORMER, RF, VARIABLE: 16 MHz, capacitance 90.0 pF; 0.422 in. dia, 0.490 in. long; mfr 93292, part no. 500-2614, 06845, dwg 4032522-0714.	7-31
A2A4A11T4		TRANSFORMER, RF, VARIABLE: 11 MHz, capacitance 140 pF; 0.390 in. dia, 0.490 in. long; mfr 93292, part no. 500-2710; 06845, dwg 4032523-0710.	7-31
A2A4A12		22 MHZ SUBASSEMBLY: 3.90 in. long, 0.625 in. w, 1.12 in. h; mfr 98738, part no. 01A226182-21-11.	7-32
A2A4A12C1		CAPACITOR, FIXED, MICA: 7 pF ±0.5 pF; 500 Vdc working; 0.450 in. long, 0.360 in. w, 0.170 in. thk; mfr 06845, dwg 4031978-0742.	7-32
A2A4A12C2		CAPACITOR, FIXED, MICA: 64 pF ±1%, 500 Vdc working; 0.450 in. long, 0.360 in. w, 0.180 in. thk; mfr 06845, dwg 4031978-0720.	7-32
A2A4A12C3		CAPACITOR, FIXED, MICA: 68 pF ±1%, 500 Vdc working; 0.450 in. long, 0.360 in. w, 0.180 in. thk; mfr 06845, dwg 4031978-0723.	7-32

Table 7-2. Radio Receiver R-1051H/URR, Parts List (Continued)

RF AMPLIFIER ASSEMBLY A2A4

REFERENCE DESIGNATION	NOTES	NAME AND DESCRIPTION	FIGURE NUMBER
A2A4A12C4		CAPACITOR, FIXED, MICA: 85 pF ±1%, 500 Vdc working; 0.460 in. long, 0.360 in. w, 0.180 in. thk; mfr 06845, dwg 4031978-0733.	7-32
A2A4A12C5		CAPACITOR, FIXED, MICA: 132 pf ±1%, 500 Vdc working; 0.460 in. long, 0.370 in. w, 0.190 in. thk; mfr 98738, dwg 21P228300-13.	7-32
A2A4A12E1		BLOCK, CONTACT: Item 1.	7-32
A2A4A12L1		COIL, RF, VARIABLE: 20.0 MHz, capacitance 7.0 pF; 0.435 in. dia, 0.400 in. long; mfr 93292, part no. 500-2349, 06845, dwg 4032547-0701.	7-32
A2A4A12T1		TRANSFORMER, RF, VARIABLE: 22 MHz, capacitance 67.5 pF ±5%, 0.422 in. dia, 0.490 in. long; mfr 93292, part no. 500-2421, 06845, dwg 4032167-0721.	7-32
A2A4A12T2		COIL, RF, VARIABLE: 22 MHz, capacitance 86.0 pF ±5%; 0.422 in. dia, 0.490 in. long; mfr 93292, part no. 500-2521, 06845, dwg 4032521-0721.	7-32
A2A4A12T3		TRANSFORMER, RF, VARIABLE: 17 MHz, capacitance 85.2 pf; 0.422 in. dia, 0.490 in. long; mfr 93292, part no. 500-2615, 06845, dwg 4032522-0715.	7-32
A2A4A12T4		TRANSFORMER, RF, VARIABLE: 12 MHz, capacitance 130 pF; 0.390 in. dia, 0.531 in. long; mfr 93292, art no. 500-2711, 06845, dwg 4032523-0711.	7-32
A2A4A13		23 MHZ SUBASSEMBLY: 3.90 in. long, 0.625 in. w, 1.12 in. h; mfr 98738, part no. 01A226182-22-11.	7-33
A2A4A13C1		CAPACITOR, FIXED, ,CERAMIC: 0.160 in. dia, 0.260 in. long: 3.9 pF; 500 Vdc working; mfr 78488, part no. GA3-9PFPORM5PCT, 06845, dwg 4031973-0732.	7-33
A2A4A13C2		CAPACITOR, FIXED, MICA: 61 pF ±%, 500 Vdc working; 0.450 in. long, 3.60 in. w, 0.170 in. thk; mfr 06845, dwg 4031978-0718.	7-33
A2A4A13C3		CAPACITOR, FIXED, MICA: 66 pF ±1%, 500 Vdc working; 0.450 in. long, 0.360 in. w, 0.180 in. thk; mfr 06845, dwg 4031978-0721.	7-33
A2A4A13C4		CAPACITOR, FIXED, MICA: 80 pf ±1%, 500 Vdc working; 0.450 in. long, 0.360 in. w, 0.180 in. thk; mfr 06845, dwg 4031978-0731.	7-33
A2A4A13C5		CAPACITOR, FIXED, MICA: 120 pF ±1%, 500 Vdc working; 0.460 in. long, 0.370 in. w, 0.180 in. thk; mfr 98738, dwg 21P228300-07.	7-33

Table 7-2. Radio Receiver R-1051H/URR, Parts List (Continued)

RF AMPLIFIER ASSEMBLY A2A4

REFERENCE DESIGNATION	NOTES	NAME AND DESCRIPTION	FIGURE NUMBER
A2A4A13E1		BLOCK, CONTACT: Item 1.	7-33
A2A4A13L1		COIL, RF, VARIABLE: 20.0 MHz, capacitance 3.9 pF; 0.435 in. dia, 0.400 in. long; mfr 93292, part no. 500-2350, 06845, dwg 4032547-0702.	7-33
A2A4A13T1		TRANSFORMER, RF, VARIABLE: 23 MHz; capacitance 65.0 pF ±55, 0.422 in. dia, 0.490 in. long; mfr 93292, part no. 500-2422, 06845, dwg 4032167-0722.	7-33
A2A4A13T2		COIL, RF, VARIABLE: 23 MHz, capacitance 83.5 pF ±5%, 0.422 in. dia, 0.490 in. long; mfr 93292, part no. 500-2522, 06845, dwg 4032521-0722.	7-33
A2A4A13T3		TRANSFORMER, RF, VARIABLE: 18 MHz, capacitance 81.0 pF; 0.422 in. dia, 0.490 in. long; mfr 93292, part no. 500-2616, 06845, dwg 4032522-0716.	7-33
A2A4A13T4		TRANSFORMER, RF, VARIABLE: 13 MHz, capacitance 122 pf; 0.390 in. dia, 0.531 in. long; mfr 93292, part no. 500-2712, 06845, dwg 4032523-0712.	7-33
A2A4A14		24 MHZ SUBASSEMBLY: 3.90 in. long, 0.625 in. w, 1.12 in. h; mfr 98738, part no. 01A226323-21-11.	7-34
A2A4A14C1		CAPACITOR: Item 10.	7-34
A2A4A14C2		CAPACITOR, FIXED, MICA: 58 pF ±1%, 500 Vdc working; 0.450 in. long, 0.360 in. w, 0.170 in. thk;	7-34
A2A4A14C3		CAPACITOR, FIXED, MICA: 63 pF ±1%, 500 Vdc working; 0.450 in. long, 0.360 in. w, 0.180 in. thk; mfr 06845, dwg 4031978-0719.	7-34
A2A4A14C4		CAPACITOR, FIXED, MICA: 75 pF ±1%, 500 Vdc working; 0.450 in.long, 0.360 in. w, 0.180 in. thk; mfr 06845, dwg 4031978-0729.	7-34
A2A4A14C5		CAPACITOR, FIXED, MICA: 111 pf ±1%, 500 Vdc working; 0.460 in. long, 0.370 in. w, 0.180 in. thk; mfr 98738, dwg 21P228300-05.	7-34
A2A4A14E1		BLOCK, CONTACT: Item 1.	7-34
A2A4A14T1		TRANSFORMER, RF, VARIABLE: 24 MHz, capacitance 62.5 pF ±5%, 0.422 in. dia, 0.490 in. long; mfr 93292, part no. 500-2423, 06845, dwg 4032167-0723.	7-34
A2A4A14T2		COIL, RF, VARIABLE: 24 MHz, capacitance 82.0 pF ±5%, 0.422 in. dia, 0.490 in. long; mfr 93292, part no. 500-2523, 06845, dwg 4032521-0723.	7-34

Table 7-2. Radio Receiver R-1051H/URR, Parts List (Continued)

RF AMPLIFIER ASSEMBLY A2A4

REFERENCE DESIGNATION	NOTES	NAME AND DESCRIPTION	FIGURE NUMBER
A2A4A14T3		TRANSFORMER, RF, VARIABLE: 19 MHz, capacitance 77.4 pF; 0.422 in. dia, 0.490 in. long; mfr 93292, part no. 500-2617, 06845, dwg 4032522-0717.	7-34
A2A4A14T4		TRANSFORMER, RF, VARIABLE: 14 MHz, capacitance 115 pf; 0.390 in. dia, 0.531 in. long; mfr 93292, part no. 500-2713, 06845, dwg 4032523-0713.	7-34
A2A4A15		25 MHZ SUBASSEMBLY: 3.90 in. long, 0.625 in. w, 1.21 in. h; mfr 98738, part no. 01A226330-21-11.	7-35
A2A4A15C1		CAPACITOR, FIXED, CERAMIC: 2.2 pF ±5%, 500 Vdc working; 0.240 in. long, 0.160 in. dia; mfr 78488, part no. GA2-2PFPORM5PCT, 06845, dwg 4031973-0726.	7-35
A2A4A15C2		CAPACITOR, FIXED, MICA: 56 pF ±1%, 500 Vdc working; 0.450 in. long, 0.360 in. w, 0.170 in. thk; mfr 06845, dwg 4031978-0714.	7-35
A2A4A15C3		CAPACITOR, FIXED, MICA: 61pF ±1%, 500 Vdc working; 0.450 in. long, 0.360 in. w, 0.170 in. thk; mfr 06845, dwg 4031978-0718.	7-35
A2A4A15C4		CAPACITOR, FIXED, MICA: 71 pF ±1%, 500 Vdc working; 0.450 in. long, 0.360 in. w, 0.180 in. thk; mfr 06845, dwg 4031978-0725.	7-35
A2A4A15C5		CAPACITOR, FIXED, MICA: 103 pF ±1%, 500 Vdc working; 0.450 in. long, 0.370 in. w, 0.180 in. thk; mfr 98738, dwg 21P228300-01.	7-35
A2A4A15E1		BLOCK, CONTACT: Item 1.	7-35
A2A4A15T1		TRANSFORMER, RF, VARIABLE: 25 MHz, capacitance 60.5 pF ±5%, 0.422 in. dia, 0.490 in. long; mfr 93292, part no. 500-2424, 06845, dwg 4032167-0724.	7-35
A2A4A15T2		COIL, RF, VARIABLE: 25 MHz, capacitance 80.0 pF ±5%; 0.422 in. dia, 0.490 in. long; mfr 93292, part no. 500-2524, 06845, dwg 4032521-0724.	7-35
A2A4A15T3		TRANSFORMER, RF, VARIABLE: 20 MHz, capacitance 74.3 pF; 0.422 in. dia, 0.490 in. long; mfr 93292, part no. 500-2618, 06845, dwg 4032522-0718.	7-35
A2A4A15T4		TRANSFORMER, RF, VARIABLE: 15 MHz, capacitance 109 pF; 0.390 in. dia, 0.531 in. long; mfr 93292, part no. 500-2714, 06845, dwg 4032523-0714.	7-35

Table 7-2. Radio Receiver R-1051H/URR, Parts List (Continued)

RF AMPLIFIER ASSEMBLY A2A4

REFERENCE DESIGNATION	NOTES	NAME AND DESCRIPTION	FIGURE NUMBER
A2A4A16		26 MHZ SUBASSEMBLY: 3.90 in. long, 0.625 in. w, 1.12 in. h; 98738, part no. 01A226331-21-11.	7-36
A2A4A16C1		CAPACITOR, FIXED, CERAMIC: 2.2 pF ±5%, 500 Vdc working; 0.240 in. long, 0.160 in. dia; mfr 78488, part no. GA2-2PFPORM5PCT, 06845, dwg 4031973-0726.	7-36
A2A4A16C2		CAPACITOR, FIXD,MICA: 54 pF ±1%, 500 Vdc working; 0.450 in. long, 0.360 in. w, 0.170 in. thk; mfr 06845, dwg 4031978-0712.	7-36
A2A4A16C3		CAPACITOR, FIXED, MICA: 52 pF ±1%, 500 Vdc working; 0.450 in. long, 0.360 in. w, 0.170 in. thk; mfr 06845, dwg 4031978-0710.	7-36
A2A4A16C4		CAPACITOR, FIXED, MICA: 67 pF ±1%, 500 Vdc working; 0.450 in. long, 0.360 in. w, 0.180 in. thk; mfr 06845, dwg 4031978-0722.	7-36
A2A4A16C5		CAPACITOR: Item 6.	7-36
A2A4A16E1		BLOCK, CONTACT: Item 1.	7-36
A2A4A16T1		TRANSFORMER, RF, VARIABLE: 26 MHz, capacitance 58.8 pF ±5%; 0.422 in. dia, 0.490 in. long; mfr 93292, part no. 500-2425, 06845, dwg 4032167-0725.	7-36
A2A4A16T2		COIL, RF, VARIABLE: 26 MHz, capacitance 80.0 pF ±5%; 0.422 in. dia, 0.490 in. long; mfr 93292, part no. 500-2524, 06845, dwg 4032521-0724.	7-36
A2A4A16T3		TRANSFORMER, RF, VARIABLE: 21 MHz, capacitance 71.7 pF; 0.422 in. dia, 0.490 in. long, mfr 93292, part no. 500-2619, 06845, dwg 4032522-0719.	7-36
A2A4A16T4		TRANSFORMER, RF, VARIABLE: 16 MHz, capacitance 103 pF; 0.390 in. dia, 0.490 in. long; mfr 93292, part no. 500-2715, 06845, dwg 4032523-0715.	7-36
A2A4A17		27 MHZ SUBASSEMBLY: 3.90 in. long, 0.625 in. w, 1.12 in. h; mfr 98738, part no. 01A226332-21-11.	7-37
A2A4A17C1		CAPACITOR, FIXED, CERAMIC: 2.4 pF ±5%, 500 Vdc working; 0.240 in. long, 0.160 in. dia; mfr 78488, part no. GA2-4PFPORM5PCT, 06845, dwg 4031973-0727.	7-37
A2A4A17C2		CAPACITOR, FIXED, MICA: 52 pF ±1%, 500 Vdc working; 0.450 in. long, 0.360 in. w, 0.170 in. thk; mfr 06845, dwg 4031978-0710.	7-37

Table 7-2. Radio Receiver R-1051H/URR, Parts List (Continued)

RF AMPLIFIER ASSEMBLY A2A4

REFERENCE DESIGNATION	NOTES	NAME AND DESCRIPTION	FIGURE NUMBER
A2A4A17C3		CAPACITOR, FIXED, MICA: 57 pF ±1%, 500 Vdc working; 0.450 in. long, 0.360 in. w, 0.170 in. thk; mfr 06845, dwg 4031978-0715.	7-37
A2A4A17C4		CAPACITOR, FIXED, MICA: 64 pF ±1%, 500 Vdc working; 0.450 in. long, 0.360 in. w, 0.180 in. thk; mfr 06845, dwg 4031978-0720.	7-37
A2A4A17C5		CAPACITOR, FIXED, MICA: 90 pF ±1%, 500 Vdc working; 0.450 in. long, 0.360 in. w, 0.180 in. thk; mfr 06845, dwg 4031978-0734.	7-37
A2A4A17E1		BLOCK, CONTACT: Item 1.	7-37
A2A4A17T1		TRANSFORMER, RF, VARIABLE: 27 MHz, capacitance 57.5 pF ±5%, 0.422 in. dia, 0.490 in. long; mfr 93292, part no. 500-2426, 06845, dwg 4032167-0726.	7-37
A2A4A17T2		COIL, RF, VARIABLE: 27 MHz, capacitance 77.5 pF ±5%; 0.422 in. dia, 0.490 in. long; mfr 93292, part no. 500-2526, 06845, dwg 4032521-0726.	7-37
A2A4A17T3		TRANSFORMER, RF, VARIABLE: 22 MHz, capacitance 69.4 pF; 0.422 in. dia, 0.490 in. long; mfr 93292, part no. 500-2620, 06845, dwg 4032522-0720.	7-37
A2A4A17T4		TRANSFORMER, RF, VARIABLE: 17 MHz, capacitance 98.8 pF; 0.390 in. dia, 0.531 in. long; mfr 93292, part no. 500-2716, 06845, dwg 4032523-0716.	7-37
A2A4A18		28 MHZ SUBASSEMBLY: 3.90 in. long, 0.625 in. w, 1.12 in. h; mfr 98738, part no. 01A226333-21-11.	7-38
A2A4A18C1		CAPACITOR, FIXED CERAMIC: 2.4 pF ±5%, 500 Vdc working; 0.240 in. long, 0.160 in. dia; mfr 78488, part no. GA2-4PFPORM5PCT, 06845, dwg 4031978-0727.	7-38
A2A4A18C2		CAPACITOR, FIXED,MICA: 50 pF ±1%, 500 Vdc working; 0.450 in. long, 0.360 in. w, 0.170 in. thk; mfr 06845, dwg 4031978-0713.	7-38
A2A4A18C3		CAPACITOR, FIXED, MICA: 55 pF ±1%, 500 Vdc working; 0.450 in. long, 0.360 in. w,0.170 in. thk; mfr 06845, dwg 4031978-0713.	7-38
A2A4A18C4		CAPACITOR, FIXED, MICA: 61 pF ±1%, 500 Vdc working; 0.450 in. long, 0.360 in. w, 0.170 in. thk; mfr 06845, dwg 4031978-0718.	7-38
A2A4A18C5		CAPACITOR, FIXED, MICA: 85 pF ±1%, 500 Vdc working; 0.460 in. long, 0.360 in. w, 0.180 in. thk; mfr 06845, dwg 4031978-0733.	7-38

Table 7-2. Radio Receiver R-1051H/URR, Parts List (Continued)

RF AMPLIFIER ASSEMBLY A2A4

REFERENCE DESIGNATION	NOTES	NAME AND DESCRIPTION	FIGURE NUMBER
A2A4A18E1		BLOCK, CONTACT: Item 1.	7-38
A2A4A18T1		TRANSFORMER, RF, VARAIBLE: 28 MHz, capacitance 56.6 pF ±5%, 0.422 in. dia, 0.490 in. long, mfr 93292, part no. 500-2427, 06845, dwg 4032167-0727.	7-38
A2A4A18T2		COIL, RF, VARIABLE: 28 MHz, capacitance 76.5 pF ±5%; 0.422 in. dia, 0.490 in. long; mfr 93292, part no. 500-2527, 06845, dwg 4032521-0727	7-38
A2A4A18T3		TRANSFORMER, RF, VARIABLE: 23 MHz; capacitance 67.2 pF; 0.422 in. dia, 0.490 in. long; mfr 93292, part no. 500-2621, 06845, dwg 4032522-0721.	7-38
A2A4A18T4		TRANSFORMER, RF, VARIABLE: 18 MHz, capacitance 94.6 pF; 0.390 in. dia, 0.531 in. long; mfr 93292, part no. 500-2717, 06845, dwg 4032523-0717.	7-38
A2A4A19		29 MHZ SUBASSEMBLY: 3.90 in. long, 0.625 in. w, 1.12 in. thk; mfr 98738, part no. 01A226334-21-11.	7-39
A2A4A19C1		CAPACITOR, FIXED, CERAMIC: 2.4 pF ±5%, 500 Vdc working; 0.240 in. long, 0.160 in. thk; mfr 78488, part no. GA2-4PFPORM5PCT, 06845, dwg 4031973-0727.	7-39
A2A4A19C2		CAPACITOR, FIXED, MICA: 48 pF ±0.5 pF; 500 Vdc working; 0.450 in. long, 0.360 in. w, 0.170 in. thk; mfr 06845, dwg 4031978-0708.	7-39
A2A4A19C3		CAPACITOR, FIXED, MICA: 58 pF ±1%, 500 Vdc working; 0.450 in. long, 0.360 in. w, 0.170 in. thk; mfr 06845, dwg 4031978-0711.	7-39
A2A4A19C4		CAPACITOR, FIXED, MICA: 58 pF ±1%, 500 Vdc working; 0.450 in. long, 0.260 in. w, 0.170 in. thk; mfr 06845, dwg 4031978-0716.	7-39
A2A1A19C5		CAPACITOR, FIXED, MICA: 80 pF ±1%, 500 Vdc working; 0.450 in. long, 0.360 in. w, 0.180 in. thk; mfr 06845, dwg 4031978-0731.	7-39
A2A4A19E1		BLOCK, CONTACT: Item 1.	7-39
A2A4A19T1		TRANSFORMER, RF, VARIABLE: 29 MHz, capacitance 55.1 pF ±5%; 0.422 in. dia, 0.490 in. long; mfr 93292, part no. 500-2428, 06845, dwg 4032167-0728.	7-39
A2A4A19T2		COIL, RF, VARIABLE: 29 MHz, capacitance 78.5 pF ±5%; 0.422 in. dia, 0.490 in. long; mfr 93292, part o. 500-2528, 06845, dwg 4032521-0728.	7-39

Table 7-2. Radio Receiver R-1051H/URR, Parts List (Continued)

RF AMPLIFIER ASSEMBLY A2A4

REFERENCE DESIGNATION	NOTES	NAME AND DESCRIPTION	FIGURE NUMBER
A2A4A19T3		TRANSFORMER, RF, VARIABLE: 24 MHz, capacitance 65.9 pF; 0.422 in. dia, 0.490 in. long; mfr 93292, part no. 500-2628, 06845, dwg 4032522-0728.	7-39
A2A4A19T4		TRANSFORMER, RF, VARIABLE: 19 MHz, capacitance 90.9 pF; 0.390 in. dia, 0.531 in. long; mfr 93292, part no. 500-2718, 06845, dwg 4032523-0718.	7-39
A2A4A19Y1		CRYSTAL UNIT, QUARTZ: Frequency 28.500 MHz; 0.515 in. long, 0.418 in. w, 0.166 in. thk; mfr 00136, part no. M20-28-500MHZ, 06845, dwg 4032119-0703.	7-39
A2A4A20		2 MHZ SUBASSEMBLY: 3.90 in. long, 0.625 in. w, 1.12 in. h; mfr 98738, part no. 01A226183-21-11.	7-40
A2A4A20C1		CAPACITOR: Item 10.	7-40
A2A4A20C2		Not used.	
A2A4A20C3			
A2A4A20C4		CAPACITOR, FIXED, MICA: 56 pF ±1%, 500 Vdc working; 0.450 in. long 0.360 in. w, 0.170 in. thk; mfr 06845, dwg 4031978-0714.	7-40
A2A4A20C5		CAPACITOR, FIXED, MICA: 76 pF ±1%, 500 Vdc working; 0.450 in. long, 0.360 in. w, 0.180 in. thk; mfr 06845, dwg 4031978-0730.	7-40
A2A4A20C6		CAPACITOR, FIXED, PLASTIC: 0.068 uF ±5%, 50 Vdc working; 0.531 in. long, 0.500 in. w, 0.218 in. thk; mfr 84411, part no. 601PE683-50W, 06845, dwg 2027530-0704.	7-40
A2A4A20E1		BLOCK, CONTACT: Item 1.	7-40
A2A4A20T1		TRANSFORMER, RF, VARIABLE: 2 MHz, capacitance 767 pF ±5%; 0.422 in. dia, 0.490 in. long; mfr 93292, part no. 500-2401, 06845, dwg 4032167-0701.	7-40
A2A4A20T2		COIL, RF, VARIABLE: 2 MHz, capacitance 772 pF ±5%; 0.422 in. dia, 0.490 in. long; mr 93292, part no. 500-2501, 06845, dwg 4032521-0701.	7-40
A2A4A20T3		TRANSFORMER, RF, VARIABLE: 25 MHz, capacitance 65.0 pF; 0.422 in. dia, 0.490 in. long; mfr 93292, part no. 500-2622, 06845, dwg 4032522-0722.	7-40
A2A4A20T4		TRANSFORMER, RF, VARIABLE: 20 MHz, capacitance 87.6 pF; 0.390 in. dia, 0.531 in. long; mfr 93292, part no. 500-2719, 06845, dwg 4032523-0719.	7-40

Table 7-2. Radio Receiver R-1051H/URR, Parts List (Continued)

RF AMPLIFIER ASSEMBLY A2A4

REFERENCE DESIGNATION	NOTES	NAME AND DESCRIPTION	FIGURE NUMBER
A2A4A21		3 MHZ SUBASSEMBLY: 3.90 in. long, 0.625 in. w, 1.12 in. h; mfr 98738, part no. 01A226184-21-11.	7-41
A2A4A21C1		CAPACITOR: Item 10.	7-41
A2A4A21C2 and A2A4A21C3		CAPACITOR, FIXED, MICA: 1250 pF ±1%, 500 Vdc working; 1.250 in. long, 0.660 in. w, 0.220 in. thk; mfr 98738, dwg 21P228301-01.	7-41
A2A4A21C4		CAPACITOR, FIXED, MICA: 54 pF ±1%, 500 Vdc working; 0.450 in. long, 0.360 in. w, 0.170 in. thk; mfr 06845, dwg 4031978-0712.	7-41
A2A4A21C5		CAPACITOR, FIXED, MICA: 73 pf ±1%, 500 Vdc working; 0.450 in. long, 0.360 in. w, 0.180 in. thk; mfr 06845, dwg 4031978-0727.	7-41
A2A4A21C6		CAPACITOR, FIXED, MYLAR DIELECTRIC: 0.047 uF ±5%, 50 Vdc working; 0.531 in. long, 0.453 in. w, 0.203 in. thk; mfr 84411, part no. 601PE473-50W, 06845, dwg 2027530-0703.	7-41
A2A4A21E1		BLOCK, CONTACT: Item 1.	7-41
A2A4A21T1		TRANSFORMER, RF, VARIABLE: 3 MHz, capacitance 485 pF ±55, 0.422 in. dia, 0.490 in. long; mfr 93292, part no. 500-2402, 06845, dwg 4032167-0702.	7-41
A2A4A21T2		COIL, RF, VARIABLE: 3 MHz, capacitance 490 pF ±5%; 0.422 in. dia, 0.490 in. long; mfr 93292, part no. 500-2502, 06845, dwg 4032521-0702.	7-41
A2A4A21T3		TRANSFORMER, RF, VARIABLE: 26 MHz, capacitance 64.4 pF; 0.422 i. dia, 0.490 in. long; mfr 93292, part no. 500-2623, 06845, dwg 4032522-0723.	7-41
A2A4A21T4		TRANSFORMER, RF, VARIABLE: 21 MHZ, capacitance 84.6 pF; 0.390 in. dia, 0.531 in. long; mfr 93292, part no. 500-2720, 06845, dwg 4032523-0720.	7-41
A2A4A22		4 MHZ SUBASSEMBLY: 3.90 in. long, 0.625 in. w, 1.12 in. thk; mfr 98738, part no. 01A226315-21-11.	7-42
A2A4A22C1		CAPACITOR, FIXED, CERAMIC: 4.7 pF ±5%, 500 Vdc working; 0.250 in. long, 0.160 in. dia; mfr 78488, part no. GA4-7PFPORM5PCT, 06845, dwg 4031973-0734.	7-42
A2A4A22C2		CAPACITOR, FIXED, MICA: 623 pF ±1%, 300 Vdc working; 0.470 in. long, 0.390 in. w, 0.210 in. thk; mfr 98738, dwg 21P228300-56.	7-42
A2A4A22C3		CAPACITOR, FIXED, MICA: 629 pF ±1%, 300 Vdc working; 0.470 in. long, 0.390 in. w, 0.210 in. thk; mfr 98738, dwg 21P228300-57.	7-42
A2A4A22C4		CAPACITOR, FIXED, MICA: 52 pF ±1%, 500 Vdc working; 0.450 in. long, 0.360 in. w, 0.170 in. thk; mfr 06845, dwg 4031978-0710.	7-42

Table 7-2. Radio Receiver R-1051H/URR, Parts List (Continued)

RF AMPLIFIER ASSEMBLY A2A4

REFERENCE DESIGNATION	NOTES	NAME AND DESCRIPTION	FIGURE NUMBER
A2A4A22C5		CAPACITOR, FIXED, MICA: 68 pF ±1%, 500 Vdc working; 0.450 in. long, 0.360 in. w, 0.170 in. thk; mfr 06845, dwg 4031978-0723.	7-42
A2A4A22E1		BLOCK, CONTACT: Item 1.	7-42
A2A4A22T1		TRANSFORMER, RF, VARIABLE: 4 MHz, capacitance 352.0 pF ±5%, 0.422 in. dia, 0.490 in. long; mfr 93292, part no. 500-2403, 06845, dwg 4032167-0703.	7-42
A2A4A22T2		COIL, RF, VARIABLE: 4 MHz, capacitance 370 pF ±5%; 0.422 in. dia, 0.490 in. long; mfr 93292, part no. 500-2503, 06845, dwg 4032521-0703.	7-42
A2A4A22T3		TRANSFORMER, RF, VARIABLE: 27 MHz, capacitance 67.0 pF; 0.422 in. dia, 0.490 in. long; mfr 93292, part no. 500-2624, 06845, dwg 4032522-0724.	7-42
A2A4A22T4		TRANSFORMER, RF, VARIABLE: 22 MHz, capacitance 81.8 pF; 0.390 in. dia, 0.531 in. long; mfr 93292, part no. 500-2721, 06845, dwg 4032523-0721.	7-42
A2A4A23		5 MHZ SUBASSEMBLY: 3.90 in. long, 0.625 in. w, 1.21 in. h; mfr 98738, part no. 01a226335-21-11.	7-43
A2A4A23C1		CAPACITOR, FIXED, CERAMIC: 3.9 pF ±5%, 500 Vdc working; 0.260 in. long, 0.160 in. dia; mfr 78483, part no. GA3-9PFPORM5PCT, 06845, dwg 4031973-0732.	7-43
A2A4A23C2		CAPACITOR, FIXED, MICA: 416 pF ±1%, 300 Vdc working; 0.470 in. long, 0.380 in. w,0.200 in. thk; mfr 98738, dwg 21P228300-51.	7-43
A2A4A23C3		CAPACITOR, FIXED, MICA: 422 pF ±1%, 300 Vdc working; 0.460 in. long, 0.380 in. w, 0.200 in. thk mfr 98738, dwg 21P228300-52.	7-43
A2A4A23C4		CAPACITOR, FIXED, MICA: 50 pF ±0.5 pF, 500 Vdc working; 0.450 in. long, 0.360 in. w, 0.170 in. thk; dwg 4031978-0709.	7-43
A2A4A23C5		CAPACITOR, FIXED, MICA: 66 pf ±1%, 500 Vdc working; 0.450 in. long, 0.360 in. w, 0.180 in. thk; mfr 06845, dwg 4031978-0721.	7-43
A2A4A23E1		BLOCK, CONTACT: Item 1.	7-43
A2A4A23T1		TRANSFORMER, RF, VARIABLE: 5 MHz, capacitance 284 pF ±5%; 0.422 in. dia, 0.490 in. long; mfr 93292, part no. 500-2404, 06845, dwg 4032167-0704.	7-43
A2A4A23T2		COIL, RF, VARIABLE: 5 MHz, capacitance 298 pF ±5%; 0.422 in. dia, 0.490 in. long; mfr 93292, part no. 500-2504, 06845, dwg 4032521-0704.	7-43

Table 7-2. Radio Receiver R-1051H/URR, Parts List (Continued)

RF AMPLIFIER ASSEMBLY A2A4

REFERENCE DESIGNATION	NOTES	NAME AND DESCRIPTION	FIGURE NUMBER
A2A4A23T3		TRANSFORMER, RF, VARIABLE: 28 MHz, capacitance 66.8 pF; 0.422 in. dia, 0.490 in. long; mfr 93292, part no. 500-2625, 06845, dwg 4032522-0725.	7-43
A2A4A23T4		TRANSFORMER, RF, VARIABLE: 23 MHz, capacitance 79.3 pF; 0.390 in. dia, 0.531 in. long; mfr 93292, part no. 500-2722, 06845, dwg 4032523-0722.	7-43
A2A4A24		6 MHZ SUBASSEMBLY: 3.90 in. long, 0.625 in. w, 1.12 in. h; mfr 98738, part no. 01A226324-21-11.	7-44
A2A4A24C1		CAPACITOR, FIXED, CERAMIC: 3.3 pf ±5%, 500 Vdc working; 0.260 in. long, 0.160 in. dia; mfr 78488, part no. GA3-3PFPORM5PCT, 06845, dwg 4031973-0730.	7-44
A2A4A24C2		CAPACITOR, FIXED, MICA: 312 pF ±1%, 500 Vdc working; 0.470 in. long, 0.390 in. w, 0.210 in. thk; mfr 98738, dwg 21P228300-44.	7-44
A2A4A24C3		CAPACITOR, FIXED, MICA: 318 pF ±1%, 500 Vdc working; 0.470 in. long, 0.390 in. w, 0.210 in. thk; mfr 98738, dg 21P228300-46.	7-44
A2A4A24C4		CAPACITOR, FIXED, MICA: 48 pf ±0.5% pf; 500 Vdc working; 0.450 in. long, 0.360 in. w, 0.170 in. thk; mfr 06845, dwg 403178-0708.	7-44
A2A4A24C5		CAPACITOR, FIXED, MICA; 63 pf ±1%, 500 Vdc working, 0.450 in. long, 0.360 in. w, 0.130 in. thk; mfr 06845, dwg 4031978-0719.	7-44
A2A4A24E1		BLOCK, CONTACT: Item 1.	7-44
A2A4A24T1		TRANSFORMER, RF, VARIABLE: 6 MHz, capacitance 230 pF ±5%; 0.422 in. dia, 0.490 in. long; mfr 93292, part no. 500-2405, 06845, dwg 4032167-0705.	7-44
A2A4A24T2		COIL, RF, VARIABLE: 6 MHz, capacitance 250 pF ±5%; 0.422 in. dia, 0.490 in. long; mfr 93292, part no. 500-2505, 06845, dwg 4032521-0705.	7-44
A2A4A24T3		TRANSFORMER, RF, VARIABLE: 29 MHz, capacitance 66.6 pF; 0.422 in. dia, 0.490 in. long; mfr 93292, part no. 500-2626, 06845, dwg 4032522-0726.	7-44
A2A4A24T4		TRANSFORMER, RF, VARIABLE: 24 MHz, capacitance 77.0 pF; 0.390 in. dia, 0.531 in. long; mfr 93292, part no. 500-2723, 06845, dwg 4032523-0723.	7-44

Table 7-2. Radio Receiver R-1051H/URR, Parts List (Continued)

RF AMPLIFIER ASSEMBLY A2A4

REFERENCE DESIGNATION	NOTES	NAME AND DESCRIPTION	FIGURE NUMBER
A2A4A25		7 MHZ SUBASSEMBLY: 3.90 in. long, 0.625 in. w, 1.12 in. h; mfr 98738, part no. 01A226706-21-11.	7-45
A2A4A25C1		CAPACITOR, FIXED, CERMAIC: 3.0 pF ±5%, 500 Vdc working; 0.260 in. long, 0.160 in. dia, mfr 78488, part no. GA3-0PFPORM5PCT, 06845, dwg 4031973-0729.	7-45
A2A4A25C2		CAPACITOR, FIXED, MICA: 250 pF ±1%, 500 Vdc working; 0.470 in. long, 0.390 in. w, 0.210 in. thk; mfr 98738, dwg 21P228300-39.	7-45
A2A4A25C3		CAPACITOR, FIXED, MICA: 256 pF ±1%, 500 Vdc working; 0.470 in. long, 0.380 in. w, 0.200 in. thk; mfr 98738, dwg 21P228300-41.	7-45
A2A4A25C4		Not used.	
A2A4A25C5		CAPACITOR, FIXED, MICA: 61 pF ±1%, 500 Vdc working; 0.450 in. long, 0.360 in. w, 0.170 in. thk; mfr 06845, dwg 4031978-0718.	7-45
A2A4A25E1		BLOCK, CONTACT: Item 1.	7-45
A2A4A25T1		TRANSFORMER, RF, VARIABLE: 7 MHz, capacitance 196 pF ±5%; 0.422 in. dia, 0.490 in. long; mfr 93292, part o. 500-2406, dwg 4032167-0706.	7-45
A2A4A25T2		COIL, RF VARIABLE: 7 MHz, capacitance 216 pF ±5%; 0.422 in. dia, 0.490 in. long; mfr 93292, part no. 500-2506, 06845, dg 4032521-0706.	7-45
A2A4A25T3		TRANSFORMER, RF, VARIABLE: 2 MHz, capacitance 754 pF; 0.422 in. dia, 0.490 in. long; mfr 93292, part no. 500-2601, 06845, dwg 4032522-0701.	7-45
A2A4A25T4		TRANSFORMER, RF, VARIABLE: 25 MHz, capacitance 74.9 pF; 0.390 in. dia, 0.531 in. long; mfr 93292, part no. 500-2724, 06845, dwg 4032523-0724.	7-45
A2A4A26		8 MHZ SUBASSEMBLY: 3.90 in. long,0.625 in. w, 1.12 in. h; mfr 98738, part no. 01A226707-21-11.	7-46
A2A4A26C1		CAPACITOR, FIXED, CERAMIC: 3 pF ±55, 500 Vdc working; 0.260 in. long, 0.160 in. dia; mfr 78488, part no. GA3-0PFPORM5PCT, 06845, dwg 4031973-0729.	7-46
A2A4A26C2		CAPACITOR, FIXED, MICA: 208 pF ±1%, 500 Vdc working; 0.460 in. long, 0.380 in. w, 0.200 in. thk; mfr 98738, dwg 21P228300-32.	7-46
A2A4A26C3		CAPACITOR, FIXED, MICA: 214 pF ±1%, 500 Vdc working; 0.460 in. long, 0.300 in. w, 0.200 in. thk; mfr 98738, dwg 21P228300-33.	7-46

Table 7-2. Radio Receiver R-1051H/URR, Parts List (Continued)

RF AMPLIFIER ASSEMBLY A2A4

REFERENCE DESIGNATION	NOTES	NAME AND DESCRIPTION	FIGURE NUMBER
A2A4A26C4		CAPACITOR, FIXED, MICA: 1250 pF ±1%, 500 Vdc working; 0.750 in. long, 0.510 in. w, 0.200 in. thk; mfr 98738, dwg 21P228301-01.	7-46
A2A4A26C5		CAPACITOR, FIXED, MICA: 59 pF ±1%, 500 Vdc working; 0.450 in. long, 0.360 in. w, 0.170 in. thk; mfr 06845, dwg 4031978-0717.	7-46
A2A4A26E1		BLOCK, CONTACT: Item 1.	7-46
A2A4A26T1		TRANSFORMER, RF, VARIABLE: 8 MHz, capacitance 172 pF ±5%; 0.422 in. dia, 0.490 in. long; mfr 93292, part no. 500-2407, 06845, dwg 4032167-0707.	7-46
A2A4A26T2		COIL, RF, VARIABLE: 8 MHz, capacitance 119 pF ±5%; 0.422 in. dia, 0.490 in. long; mfr 93292, part no. 500-2507, 06845, dwg 4032521-0707.	7-46
A2A4A26T3		TRANSFORMER, RF, VARIABLE: 3 MHz, capacitance 474 pF; 0.422 in. dia, 0.490 in. long; mfr 93292, part no. 500-2602, 06845, dwg 4032522-0702.	7-46
A2A4A26T4		TRANSFORMER, RF, VARIABLE: 26 MHz, capacitance 72.9 pF; 0.390 in. dia, 0.531 in. long; mfr 93292, part no. 500-2725, 06845, dwg 4032523-0725.	7-46
A2A4A27		9 MHZ SUBASEMBLY: 3.90 in. long, 0.625 in. w, 1.12 in. h; mfr 98738, part no. 01A226337-21-11.	7-47
A2A4A27C1		CAPACITOR, FIXED, CERAMIC: 2.7 pF ±5%, 500 Vdc working; 0.260 in. long, 0.160 in. dia, mfr 78488, part no. GA2-7PFPORM5PCT, 06845, dwg 4031973-0728.	7-47
A2A4A27C2		CAPACITOR, FIXED, MICA: 1855 pF ±1%, 500 Vdc working; 0.460 in. long, 0.390 in. w, 0.190 in. thk; mfr 98738, dwg 21P228300-25.	7-47
A2A4A27C3		CAPACITOR, FIXED, MICA: 185 pF ±1%, 500 Vdc working; 0.460 in. long, 0.380 in. w, 0.190 in. thk; mfr 98738, dwg 21P228300-27.	7-47
A2A4A27C4		CAPACITOR, FIXED, MICA: 623 pF ±1%, 300 Vdc working; 0.470 in. long, 0.390 in. w, 0.210 in. thk; mfr 98738, dwg 21P 228300-56.	7-47
A2A4A27C5		CAPACITOR, FIXED, MICA: 57 pF ±1%, 500 Vdc working; 0.450 in. long,0.360 in. w, 0.178 in. thk; mfr 06845, dwg 4031978-0715.	7-47
A2A4A27E1		BLOCK, CONTACT: Item 1.	7-47
A2A4A27T1		TRANSFORMER, RF, VARIABLE: 9 MHz, capacitance 154 pF ±5%; 0.422 in. dia, 0.490 in. long; mfr 93292, part no. 500-2408, 06845, dwg 4032167-0708.	7-47

Table 7-2. Radio Receiver R-1051H/URR, Parts List (Continued)

RF AMPLIFIER ASSEMBLY A2A4

REFERENCE DESIGNATION	NOTES	NAME AND DESCRIPTION	FIGURE NUMBER
A2A4A27T2		COIL, RF, VARIABLE: 9 MHz, capacitance 173 pF ±5%; 0.422 in. dia, 0.490 in. long; mfr 93292, part no. 500-2508, 06845, dwg 4032521-0708.	7-47
A2A4A27T3		TRANSFORMER, RF, VARIABLE: 4 MHz; capacitance 350 pF; 0.422 in. dia, 0.490 in. long; mfr 93292, part no. 500-2603, 06845, dwg 4032522-0703.	7-47
A2A4A27T4		TRANSFORMER, RF, VARIABLE: 27 MHz; capacitance 71 pF; 0.390 in. dia, 0.531 in. long; mfr 93292, part no. 500-2726, 06845, dwg 4032523-0726.	7-47
A2A4A28		10 MHZ SUBASSEMBLY: 3.90 in. long, 0.625 in. w, 1.12 in. h; mfr 98738, part no. 01A226325-21-11.	7-48
A2A4A28C1		CAPACITOR, FIXED, CERAMIC: 2.4 pF ±5%, 500 Vdc working; 0.240 in. long, 0.160 in. dia; mfr 78488, part no. GA2-4PFPORM5PCT, 06845, dwg 4031973-0727.	7-48
A2A4A28C2		CAPACITOR, FIXED, MICA: 157 pF ±1%, 500 Vdc working; 0.460 in. long, 0.370 in. w, 0.190 in. thk; mfr 98738, dwg 21P228300-20.	7-48
A2A4A28C3		CAPACITOR, FIXED, MICA: 163 pF ±1%, 500 Vdc working; 0.460 in. long, 0.370 in. w, 0.190 in. thk; mfr 98738, dwg 21P228300-22.	7-48
A2A4A28C4		CAPACITOR, FIXED, MICA: 416 pF ±1%, 300 Vdc working; 0.470 in. long, 0.380 in. w, 0.200 in. thk; mfr 98738, dwg 21P228300-51.	7-48
A2A4A28C5		CAPACITOR, FIXED, MICA: 55 pF ±1%, 500 Vdc working; 0.450 in. long,0.360 in. w, 0.170 in. thk mfr 06845, dwg 4031978-0713.	7-48
A2A4A28E1		BLOCK, CONTACT: Item 1.	7-48
A2A4A28T1		TRANSFORMER, RF, VARIABLE: 10 MHz, capacitance 140 pF ±5%; 0.422 in. dia, 0.490 in. long; mfr 93292, part no. 500-2409, 06845, dwg 4032167-0709.	7-48
A2A4A28T2		COIL, RF, VARIABLE: 10 MHz, capacitance 158 pF ±5%; 0.422 in. dia, 0.490 in. long; mfr 93292, part no. 500-2509, 06845, dwg 4032521-0709.	7-48
A2A4A28T3		TRANSFORMER, RF, VARIABLE: 5 MHz, capacitance 275 pF; 0.422 in. dia, 0.490 in. long; mfr 93292, part no. 500-2604, 06845, dwg 4032522-0704.	7-48
A2A4A28T4		TRANSFORMER, RF, VARIABLE: 28 MHz, capacitance 69.5 pF; 0.390 in. dia, 0.531 in. long; mfr 93292, part o. 500-2727, 06845, dwg 4032523-0727.	7-48

Table 7-2. Radio Receiver R-1051H/URR, Parts List (Continued)

RF AMPLIFIER ASSEMBLY A2A4

REFERENCE DESIGNATION	NOTES	NAME AND DESCRIPTION	FIGURE NUMBER
A2A4A29		11 MHZ SUBASSEMBLY: 3.90 in. long, 0.625 in. w, 1.12 in. h; mfr 98738, part no. 01A226326-21-11.	7-49
A2A4A29C1		CAPACITOR: Item 10.	7-49
A2A4A29C2		CAPACITOR, FIXED, MICA: 140 pF ±1%, 500 Vdc working; 0.460 in. long, 0.370 in. w, 0.190 in. thk; mfr 98738, dwg 21P228300-15.	7-49
A2A4A29C3		CAPACITOR, FIXED, MICA: 146 pF ±1%, 500 Vdc working; 0.460 in. long, 0.370 in. w, 0.190 in. thk; mfr 98738, dwg 21P228300-18.	7-49
A2A4A29C4		CAPACITOR, FIXED, MICA: 312 pF ±1%, 500 Vdc working; 0.470 in. long, 0.390 in. w, 0.210 in. thk; mfr 98738, dwg 21P228300-44.	7-49
A2A4A29C5		CAPACITOR, FIXED, MICA: 53 pF ±1%, 500 Vdc working; 0.450 in. long, 0.360 in. w, 0.170 in. thk; mfr 06845, dwg 4031978-0711.	7-49
A2A4A29E1		BLOCK, CONTACT: Item 1.	7-49
A2A4A29T1		TRANSFORMER, RF, VARIABLE: 11 MHz, capacitance 128 pF ±5%, 0.422 in. dia, 0.490 in. long; mfr 93292, part no. 500-2410, 068945, dwg 4032167-0710.	7-49
A2A4A29T2		COIL, RF, VARIABLE: 11 MHz, capacitance 145 pF ±5%; 0.422 in. dia, 0.490 in. long; mfr 93292, part no. 500-2510, 06845, dwg 4032521-0710.	7-49
A2A4A29T3		TRANSFORMER, RF, VARIABLE: 6 MHz, capacitance 228 pF; 0.422 in. dia, 0.490 in. long; mfr 93292, part no. 500-2605, 06845, dwg 4032522-0705.	7-49
A2A4A29T4		TRANSFORMER, RF, VARIABLE: 29 MHz, capacitance 67.8 pF; 0.390 in. dia, 0.531 in. long; mfr 93292, part no. 500-2728, 06845, dwg 4032523-0728.	7-49
A2A4A30		100 kHz ROTOR SUBASSEMBLY: 2.982 in. dia, 0.40 in. thk; mfr 98738, part no. 01A226155-21-11. (Attaching Parts) CX(3)	7-50
A2A4A30C1		CAPACITOR, FIXED, MICA: 545 pF ±1%, 300 Vdc working; 0.470 in. long, 3.90 in. w, 0.210 in. thk; mfr 98738, dwg 21P228300-55.	7-50
A2A4A30C2		CAPACITOR, FIXED, MICA: 426 pF ±1%, 300 Vdc working; 0.470 in. long, 0.380 in. w, 0.200 in. thk; mfr 98738, dwg 21P228300-53.	7-50
A2A4A30C3		CAPACITOR, FIXED, MICA: 332 pF ±1%, 500 Vdc working; 0.470 in. long, 0.400 in. w, 0.220 in. thk; mfr 98738, dwg 21P228300-47.	7-50

Table 7-2. Radio Receiver R-1051H/URR, Parts List (Continued)

RF AMPLIFIER ASSEMBLY A2A4

REFERENCE DESIGNATION	NOTES	NAME AND DESCRIPTION	FIGURE NUMBER
A2A4A30C4		CAPACITOR, FIXED, MICA: 257 pF ±1%, 500 Vdc working; 0.470 in. long, 0.390 in. w, 0.210 in. thk; mfr 98738, dwg 21P228300-42.	7-50
A2A4A30C5		CAPACITOR, FIXED, MICA: 195 pF ±1%, 500 Vdc working; 0.460 in. long, 0.380 in. w, 0.190 in. thk; mfr 98738, dwg 21P228300-31.	7-50
A2A4A30C6		CAPACITOR, FIXED, MICA: 143 pF ±1%, 500 Vdc working; 0.460 in. long, 0.370 in. w, 0.190 in. thk; mfr 98738, dwg 21P228300-16.	7-50
A2A4A30C7		CAPACITOR, FIXED, MICA: 99 pF ±1%, 500 Vdc working; 0.460 in. long, 0.360 in. w, 0.180 in. thk; mfr 06845, dwg 4031987-0739.	7-50
A2A4A30C8		CAPACITOR, FIXED, MICA: 61 pF ±1%, 500 Vdc working 0.450 in. long, 0.360 in. w, 0.170 in. thk; mfr 06845, dwg 4031978-0718.	7-50
A2A4A30C9		CAPACITOR, FIXED, MICA: 29 pf ±0.5 pF, 500 Vdc working; 0.450 in. long, 0.360 in. w, 0.170 in. thk; mfr 06845, dwg 4031978-0705.	7-50
A2A4A30C10		CAPACITOR, FIXED, MICA: 253 pF ±1%, 500 Vdc working; 0.470 in. long, 0.390 in. w, 0.210 in. thk; mfr 98738, dwg 21P228300-40.	7-50
A2A4A30C11		CAPACITOR, FIXED, MICA: 219 pF ±1%, 500 Vdc working; 0.460 in. long, 0.380 in. w, 0.200 in. thk; mfr 98738, dwg 21P228300-35.	7-50
A2A4A30C12		CAPACITOR, FIXED, MICA: 165 pF ±1%, 500 Vdc working; 0.460 in. long, 0.380 in. w, 0.190 in. thk; mfr 98738, dwg 21P228300-29.	7-50
A2A4A30C13		CAPACITOR, FIXED, MICA: 165 pF ±1%, 500 Vdc working; 0.460 in. long, 0.370 in. w, 0.190 in. thk; mfr 98738, dwg 21P 228300-23.	7-50
A2A4A30C14		CAPACITOR, FIXED, MICA: 144 pF ±1%, 500 Vdc working; 0.460 in. long, 0.370 in. w, 0.190 in. thk; mfr 98738, dwg 21P228300-17.	7-50
A2A4A30C15		CAPACITOR, FIXED, MICA: 125 pF ±1%, 500 Vdc working; 0.460 in. long, 0.370 in. w, 0.180 in. thk; mfr 98738, dwg 21P228300-09.	7-50
A2A4A30C16		CAPACITOR, FIXED, MICA; 109 pF ±1%, 500 Vdc working; 0.460 in. long, 0.370 in. w, 0.180 in. thk; mfr 98738, dwg 21P228300-03.	7-50
A2A4A30C17		CAPACITOR, FIXED, MICA: 95 pf ±1%, 500 Vdc working; 0.460 in. long, 0.370 in. w,0.180 in. thk; mfr 06845, dwg 4031978-0736.	7-50
A2A4A30C18		CAPACITOR, FIXED, MICA: 83 pF ±1%, 500 Vdc working; 0.460 in. long, 0.360 in. w, 0.180 in. thk; mfr 06845, dwg 4031978-0732.	7-50

Table 7-2. Radio Receiver R-1051H/URR, Parts List (Continued)

RF AMPLIFIER ASSEMBLY A2A4

REFERENCE DESIGNATION	NOTES	NAME AND DESCRIPTION	FIGURE NUMBER
A2A4A30C19		CAPACITOR, FIXED, MICA: 74 pF ±1%, 500 Vdc working; 0.450 in. long, 0.360 in. w, 0.180 in. thk; mfr 06845, dwg 4031978-0728.	7-50
A2A4A30MP1		ROTOR: 2.982 in. dia, 0.420 in. thk; mfr 98738, part no. 01A228403-01.	7-21/ 7-50
A2A4A31		10 kHz ROTOR SUBASSEMBLY: 2.982 in. dia; 0.440 in. thk; mfr 98738, part no. 01A226159-21-11. (Attaching Parts) CY(3)	7-21/ 7-51
A2A4A31C1		CAPACITOR, FIXED, MICA: 250 pf ±1%, 500 Vdc working; 0.470 in. long, 0.390 in. w, 0.210 in. thk; mfr 98738, dwg 21P228300-39.	7-51
A2A4A31C2		CAPACITOR, FIXED, MICA: 215 pF ±1%, 500 Vdc working; 0.460 in. long, 0.380 in. w, 0.200 in. thk; mfr 98738, dwg 21P228300-34.	7-51
A2A4A31C3		CAPACITOR, FIXED, MICA: 183 pF ±1%, 500 Vdc working; 0.460 in. long, 0.380 in. w, 0.190 in. thk; mfr 98738, dwg 21P228300-26.	7-51
A2A4A31C4		CAPACITOR, FIXED, MICA: 153 pF ±1%, 500 Vdc working; 0.460 in. long, 0.370 in. w, 0.190 in. thk; mfr 98738, dwg 21P228300-19.	7-51
A2A4A31C5		CAPACITOR, FIXED, MICA: 124 pF ±1%, 500 Vdc working; 0.460 in. long,0.370 in. w, 0.180 in. thk; mfr 98738, dwg 21P228300-08.	7-51
A2A4A31C6		CAPACITOR: Item 6.	7-51
A2A4A31C7		CAPACITOR, FIXED, MICA: 70 pF ±0.5%, 500 Vdc working; 0.450 in. long, 0.360 in. w, 0.180 in. thk; mfr 06845, dwg 4031978-0724.	7-51
A2A4A31C8		CAPACITOR, FIXED, MICA: 45 pF ±1%, 500 Vdc working; 0.450 in. long, 0.360 in. w, 0.170 in. thk; mfr 06845, dwg 4031978-0706.	7-51
A2A4A31C9		CAPACITOR, FIXED, MICA: 22 pF ±0.5% pF, 500 Vdc working; 0.45 in. long, 0.36 in. w, 0.17 in. thk; mfr 06845, dwg 4031978-0702.	7-51
A2A4A32		10 kHz ROTOR SUBASSEMBLY: 2.982 in. dia, 0.440 in. thk; mfr 98738, part no. 01A226160-21-11. (Attaching Parts) See A2A4A31.	7-21/ 7-52
A2A4A32C1		CAPACITOR, FIXED, MICA: 260 pF ±1%, 500 Vdc working; 0.470 in. long, 0.390 in. w, 0.210 in. thk; mfr 98738, dwg 21P228300-43.	7-52
A2A4A32C2		CAPACITOR, FIXED, MICA: 224 pF ±1%, 500 Vdc working; 0.460 in. long, 0.380 in. w, 0.200 in. thk; mfr 98738, dwg 21P228300-37.	7-52

Table 7-2. Radio Receiver R-1051H/URR, Parts List (Continued)

RF AMPLIFIER ASSEMBLY A2A4

REFERENCE DESIGNATION	NOTES	NAME AND DESCRIPTION	FIGURE NUMBER
A2A4A32C3		CAPACITOR, FIXED, MICA: 190 pF ±1%, 500 Vdc working; 0.460 in. long, 0.380 in. w, 0.190 in. thk; mfr 98738, dwg 21P228300-29.	7-52
A2A4A32C4		CAPACITOR, FIXED, MICA: 158 pF ±1%, 500 Vdc working; 0.470 in. long, 0.390 in. w, 0.210 in. thk; mfr 98738, dwg 21P228300-21.	7-52
A2A4A32C5		CAPACITOR, FIXED, MICA: 128 pF ±1%, 500 Vdc working; 0.460 in. long, 0.370 in. w, 0.180 in. thk; mfr 98738, dwg 21P228300-12.	7-52
A2A4A32C6		CAPACITOR, FIXED, MICA: 99 pF ±1%, 500 Vdc working; 0.460 in. long, 0.360 in. w, 0.180 in. thk; mfr 06845, dwg 4031978-0739.	7-52
A2A4A32C7		CAPACITOR, FIXED, MICA: 72 pF ±1%, 500 Vdc working; 0.450 in. long, 0.360 in. w, 0.180 in. thk; mfr 06845, dwg 4031978-0726.	7-52
A2A4A32C8		CAPACITOR, FIXED, MICA: 47 pF ±0.5 pF, 500 Vdc working; 0.450 in. long, 0.360 in. w, 0.170 in. thk; mfr 06845, dwg 4031978-0707.	7-52
A2A4A32C9		CAPACITOR, FIXED, MICA: 23 pF ±0.5% pF, 500 Vdc working; 0.450 in. long, 0.360 in. w, 0.170 in. thk; mfr 06845, dwg 4031978-0703.	7-52
A2A4A33		100 kHz ROTOR SUBASSEMBLY: 2.982 in. dia, 0.442 in. thk; mfr 98738, part no. 01A226153-21-11.	7-21/ 7-53
A2A4A33C1		CAPACITOR, FIXED, MICA: 517 pF ±1%, 300 Vdc working; 0.470 in. long, 0.390 in. w, 0.210 in. thk; mfr 98738, dwg 21P228300-54.	7-53
A2A4A33C2		CAPACITOR, FIXED, MICA: 405 pF ±1%, 300 Vdc working; 0.470 in. long, 0.380 in. w, 0.200 in. thk; mfr 98738, dwg 21P228300-50.	7-53
A2A4A33C3		CAPACITOR, FIXED, MICA: 316 pF ±1%, 500 Vdc working; 0.470 in. long, 0.390 in. w, 0.210 in. thk; mfr 98738, dwg 21P228300-45.	7-53
A2A4A33C4		CAPACITOR, FIXED, MICA: 245 pF ±1%, 500 Vdc working; 0.470 in. long, 0.390 in. w, 0.210 in. thk; mfr 98738, dwg 21P228300-38.	7-53
A2A4A33C5		CAPACITOR, FIXED, MICA: 186 pF ±1%, 500 Vdc working; 0.460 in. long,0.380 in. w, 0.190 in. thk; mfr 98738, dwg 21P228300-28.	7-53
A2A4A33C6		CAPACITOR, FIXED, MICA: 137 pF ±1%, 500 Vdc working; 0.460 in. long, 0.370 in. w, 0.190 in. thk; mfr 98738, dwg 21P228300-14.	7-53

Table 7-2. Radio Receiver R-1051H/URR, Parts List (Continued)

RF AMPLIFIER ASSEMBLY A2A4

REFERENCE DESIGNATION	NOTES	NAME AND DESCRIPTION	FIGURE NUMBER
A2A4A33C7		CAPACITOR, FIXED, MICA: 95 pF ±1%, 500 Vdc working; 0.460 in. long, 0.360 in. w, 0.180 in. thk; mfr 06845, dwg 4031978-0736.	7-53
A2A4A33C8		CAPACITOR, FIXED, MICA: 59 pF ±1%, 500 Vdc working; 0.450 in. long, 0.360 in. w, 0.170 in. thk; mfr 06845, dwg 4031978-0717.	7-53
A2A4A33C9		CAPACITOR, FIXED, MICA: 28 pF ±1%, 500 Vdc working; 0.450 in. long, 0.360 in. w, 0.170 in. thk; mfr 06845, dwg 4031978-0704.	7-53
A2A4A33C10		CAPACITOR, FIXED, MICA: 257 pF ±1%, 500 Vdc working; 0.470 in. long, 0.390 in. w, 0.210 in. thk; mfr 98738, dwg 21P228300-42.	7-53
A2A4A33C11		CAPACITOR, FIXED, MICA: 222 pF ±1%, 500 Vdc working; 0.460 in. long, 0.380 in. w, 0.200 in. thk; mfr 98738, dwg 21P228300-36.	7-53
A2A4A33C12		CAPACITOR, FIXED, MICA: 193 pF ±1%, 500 Vdc working; 0.460 in. long, 0.380 in. w, 0.190 in. thk; mfr 98738, dwg 21P228300-30.	7-53
A2A4A33C13		CAPACITOR, FIXED, MICA: 167 pF ±1%, 500 Vdc working; 0.460 in. long, 0.370 in. w, 0.190 in. thk; mfr 98738, dwg 21P228300-24.	7-53
A2A4A33C14		CAPACITOR, FIXED, MICA: 146 pF ±1%, 500 Vdc working; 0.460 in. long, 0.370 in. w, 0.190 in. thk; mfr 98738, dwg 21P228300-18.	7-53
A2A4A33C15		CAPACITOR, FIXED, MICA: 127 pF ±1%, 500 Vdc working; 0.460 in. long, 0.370 in. w, 0.180 in. thk; mfr 98738, dwg 21P228300-11.	7-53
A2A4A33C16		CAPACITOR, FIXED, MICA: 110 pF ±1%, 500 Vdc working; 0.460 in. long, 0.370 in. w, 0.180 in. thk; mfr 98738, dwg 21P228300-04.	7-53
A2A4A33C17		CAPACITOR: Item 6.	7-53
A2A4A33C18		CAPACITOR, FIXED, MICA: 83 pF ±1%, 500 Vdc working; 0.460 in. long, 0.360 in. w, 0.180 in. thk; mfr 06845, dwg 4031978-0732.	7-53
A2A4A33C19		CAPACITOR, FIXED, MICA: 74 pF ±1%, 500 Vdc working; 0.450 in. long, 0.360 in. w, 0.180 in. thk; mfr 06845, dwg 4031978-0728.	7-53
A2A4A33MP1		ROTOR: 2.982 in. dia, 0.420 in. thk; mfr 98738, part no. 01A228403-01.	7-21/ 7-53
A2A4A34		ROTOR, ELECTRIC SWITCH: 100 kHz, 2.982 in. dia, 0.432 in. thk; mfr 98738, part no. 01A226154-21-11. (Attaching Parts) See A2A4A33.	7-21 7-54

Table 7-2. Radio Receiver R-1051H/URR, Parts List (Continued)

RF AMPLIFIER ASSEMBLY A2A4

REFERENCE DESIGNATION	NOTES	NAME AND DESCRIPTION	FIGURE NUMBER
A2A4A34C1		CAPACITOR, FIXED, MICA: 517 pF ±1%, 300 Vdc working; 0.470 in. long, 0.390 in. w, 0.210 in. thk; mfr 98738, dwg 21P228300-54.	7-54
A2A4A34C2		CAPACITOR, FIXED, MICA: 405 pF ±1%, 300 Vdc working; 0.470 in. long, 0.380 in. w, 0.200 in. thk; mfr 98738, dwg 21P228300-50.	7-54
A2A4A34C3		CAPACITOR, FIXED, MICA: 316 pF ±1%, 500 Vdc working; 0.470 in. long, 0.390 in. w, 0.210 in. thk; mfr 98738, dw 21P228300-45.	7-54
A2A4A34C4		CAPACITOR, FIXED, MICA: 245 pF ±1%, 500 Vdc working; 0.470 in. long, 0.390 in. w, 0.210 in. thk; mfr 98738, dwg 21P228300-38.	7-54
A2A4A34C5		CAPACITOR, FIXED, MICA: 186 pF ±1%, 500 Vdc working; 0.460 in. long, 0.380 in. w, 0.190 in. thk; mfr 98738, dwg 21P228300-28.	7-54
A2A4A34C6		CAPACITOR, FIXED, MICA: 137 pF ±1%, 500 Vdc working; 0.460 in. long, 0.370 in. w, 0.190 in. thk; mfr 98738, dwg 21P228300-14.	7-54
A2A4A34C7		CAPACITOR, FIXED, MICA: 95 pF ±1%, 500 Vdc working; 0.460 in. long, 0.360 in. w, 0.180 in. thk; mfr 06845, dwg 4031978-0736.	7-54
A2A4A34C8		CAPACITOR, FIXED, MICA: 59 pF ±1%, 500 Vdc working; 0.450 in. long, 0.360 in. w, 0.170 in. thk; mfr 06845, dwg 4031978-0717.	7-54
A2A4A34C9		CAPACITOR, FIXED, MICA: 28 pF ±0.5 pF, 500 Vdc working; 0.450 in. long, 0.360 in. w, 0.170 in. thk; mfr 06845, dwg 4031978-0704.	7-54
A2A4A34C10		CAPACITOR, FIXED, MICA: 257 pF ±1%, 500 Vdc working; 0.470 in. long, 0.390 in. w, 0.210 in. thk; mfr 98738, dwg 21P228300-42.	7-54
A2A4A34C11		CAPACITOR, FIXED, MICA: 222 pF ±1%, 500 Vdc working; 0.460 in. long, 0.380 in. w, 0.200 in. thk; mfr 98738, dwg 21P228300-36.	7-54
A2A4A34C12		CAPACITOR, FIXED, MICA: 193 pF ±1%, 500 Vdc working; 0.460 in. long, 0.380 in. w, 0.190 in. thk; mfr 98738, dwg 21P228300-30.	7-54
A2A4A34C13		CAPACITOR, FIXED, MICA: 167 pF ±1%, 500 Vdc working, 0.460 in. long, 0.370 in. w, 0.190 in. thk; mfr 98738, dwg 21P228300-24.	7-54
A2A4A34C14		CAPACITOR, FIXED, MICA: 146 pF ±1%, 500 Vdc working 0.460 in. long, 0.37 in. w, 0.190 in. thk; mfr 98738, dwg 21P228300-18.	7-54
A2A4A34C15		CAPACITOR, FIXED, MICA: 127 pF ±1%, 500 Vdc working 0.460 in. long, 0.370 in. w, 0.180 in. thk; mfr 98738, dwg 21P228300-11.	7-54

Table 7-2. Radio Receiver R-1051H/URR, Parts List (Continued)

RF AMPLIFIER ASSEMBLY A2A4

REFERENCE DESIGNATION	NOTES	NAME AND DESCRIPTION	FIGURE NUMBER
A2A4A34C16		CAPACITOR, FIXED, MICA: 110 pF ±1%, 500 Vdc working; 0.460 in. long, 0.370 in. w, 0.180 in. thk; mfr 98738, dwg 21P228300-04.	7-54
A2A4A34C17		CAPACITOR: Item 6.	7-54
A2A4A34C18		CAPACITOR, FIXED, MICA: 83 pF ±1%, 500 Vdc working; 0.460 in. long, 0.360 in. w, 0.180 in. thk; mfr 06845, dwg 4031978-0732.	7-54
A2A4A34C19		CAPACITOR, FIXED, MICA: 74 pF ±1%, 500 Vdc working; 0.450 in. long, 0.360 in. w, 0.180 in. thk; mfr 06845, dwg 4031978-0728.	7-54
A2A4A34MP1		ROTOR: 2.982 in. dia, 0.42 in. thk; mfr 98738, part no. 01A228403-01.	7-21/ 7-54
A2A4A35		ROTOR, ELECTRIC SWITCH: 10 kHz, 2.982 in. dia, 0.291 in. thk; mfr 98738, part no. 01A226157-21-11. (Attaching Parts) CY(3)	7-55
A2A4A35C1		CAPACITOR, FIXED, MICA: 260 pF ±1%, 500 Vdc working; 0.470 in. long, 0.390 in. w, 0.210 in. thk; mfr 98738, dwg 21P228300-43.	7-55
A2A4A35C2		CAPACITOR, FIXED, MICA: 224 pF ±1%, 500 Vdc working; 0.460 in. long, 0.380 in. w, 0.200 in. thk; mfr 98738, dwg 21P228300-37.	7-55
A2A4A35C3		CAPACITOR, FIXED, MICA: 190 pF ±1%, 500 Vdc working; 0.460 in. long, 0.380 in. w, 0.190 in. thk; mfr 98738, dwg 21P228300-29.	7-55
A2A4A35C4		CAPACITOR, FIXED, MICA: 158 pF ±1%, 500 Vdc working; 0.460 in. long, 0.370 in. w, 0.190 in. thk; mfr 98738, dwg 21P228300-21.	7-55
A2A4A35C5		CAPACITOR, FIXED, MICA: 128 pF ±1%, 500 Vdc working; 0.460 in. long, 0.370 in. w, 0.180 in. thk; mfr 98738, dwg 21P228300-12.	7-55
A2A4A35C6		CAPACITOR, FIXED, MICA: 99 pF ±1%, 500 Vdc working; 0.460 in. long, 0.360 in. w, 0.180 in. thk; mfr 06845, dwg 4031978-0739.	7-55
A2A4A35C7		CAPACITOR, FIXED, MICA: 72 pF ±1%, 500 Vdc working; 0.450 in. long, 0.360 in. w, 0.180 in. thk; mfr 06845, dwg 4031978-0726.	7-55
A2A4A35C8		CAPACITOR, FIXED, MICA: 47 pF ±0.5% pF; 500 Vdc working; 0.450 in. long, 0.360 in. w, 0.170 in. thk; mfr 06845, dwg 4031978-0707.	7-55
A2A4A35C9		CAPACITOR, FIXED, MICA: 23 pF ±0.5%, 500 Vdc working; 0.450 in. long, 0.360 in. w, 0.170 in. thk; mfr 06845, dwg 4031978-0703.	7-55

Table 7-2. Radio Receiver R-1051H/URR, Parts List (Continued)

RF AMPLIFIER ASSEMBLY A2A4

REFERENCE DESIGNATION	NOTES	NAME AND DESCRIPTION	FIGURE NUMBER
A2A4A36		ROTOR, ELECTRIC SWITCH: 10 kHz, 2.982 in. dia, 0.291 in. thk; mfr 98738, part no. 01A226158 21-11. (Attaching Parts) See A2A4A35.	7-21/ 7-56
A2A4A36C1		CAPACITOR, FIXED, MICA: 260 pF ±1%, 500 Vdc working; 0.470 in. long, 0.390 in. w, 0.210 in. thk; mfr 98738, dwg 21P228300-43.	7-56
A2A4A35C2		CAPACITOR, FIXED, MICA: 224 pF ±1%, 500 Vdc working; 0.460 in. long, 0.380 in. w, 0.200 in. thk; mfr 98738, dwg 21P228300-37.	7-56
A2A4A36C3		CAPACITOR, FIXED, MICA: 190 pF ±1%, 500 Vdc working; 0.460 in. long, 0.380 in. w, 0.190 in. thk; mfr 98738, dwg 21P228300-29.	7-56
A2A4A36C4		CAPACITOR, FIXED, MICA: 158 pF ±1%, 500 Vdc working; 0.460 in. long, 0.370 in. w, 0.190 in. thk; mfr 98738, dwg 21P228300-21.	7-56
A2A4A36C5		CAPACITOR, FIXED, MICA: 128 pF ±1%, 500 Vdc working; 0.460 in. long, 0.370 in. w, 0.180 in. thk; mfr 98738, dwg 21P228300-12.	7-56
A2A4A36C6		CAPACITOR, FIXED, MICA: 99 pF ±1%, 500 Vdc working; 0.460 in. long,0.360 in. w, 0.180 in. thk; mfr 06845, dwg 4031978-0739.	7-56
A2A4A36C7		CAPACITOR, FIXED, MICA: 72 pF ±1%, 500 Vdc working; 0.450 in. long, 0.360 in. w, 0.180 in. thk; mfr 06845, dwg 4031978-0726.	7-56
A2A4A36C8		CAPACITOR, FIXED, MICA: 47 pF ±0.5% pF, 500 Vdc working; 0.450 in. long, 0.360 in. w, 0.170 in. thk; mfr 06845, dwg 4031978-0707.	7-56
A2A4A36C9		CAPACITOR, FIXED, MICA: 23 pF ±0.5% pF, 500 Vdc working; 0.450 in. long, 0.360 in. w, 0.170 in. thk; mfr 06845, dwg 4031978-0703.	7-56
A2A4A37		ROTOR, ELECTRIC SWITCH: 100 kHz, 2.982 in. dia, 0.430 in. thk; 98738, part no. 01A226156-21-11. (Attaching Parts) CZ(3)	7-21/ 7-57
A2A4A37C1		CAPACITOR, FIXED, MICA: 517 pF ±1%, 300 Vdc working; 0.470 in. long, 0.390 in. w, 0.210 in. thk; mfr 98738, dwg 21P228300-54.	7-57
A2A4A37C2		CAPACITOR, FIXED, MICA: 405 pF ±1%, 300 Vdc working; 0.470 in. long, 0.380 in. w, 0.200 in. thk; mfr 98738, dwg 21P228300-50.	7-57
A2A4A37C3		CAPACITOR, FIXED, MICA: 316 pF ±1%, 500 Vdc working; 0.470 in. long, 0.390 in. w, 0.210 in. thk; mfr 98738, dwg 21P228300-45.	7-57

Table 7-2. Radio Receiver R-1051H/URR, Parts List (Continued)

RF AMPLIFIER ASSEMBLY A2A4

REFERENCE DESIGNATION	NOTES	NAME AND DESCRIPTION	FIGURE NUMBER
A2A4A37C4		CAPACITOR, FIXED, MICA: 245 pF ±1%, 500 Vdc working; 0.470 in. long, 0.390 in. w, 0.210 in. thk; mfr 98738, dwg 21P228300-38.	7-57
A2A4A37C5		CAPACITOR, FIXED, MICA: 186 pF ±1%, 500 Vdc working; 0.460 in. long, 0.380 in. w, 0.190 in. thk; mfr 98738, part no. 21P228300-28.	7-57
A2A4A37C6		CAPACITOR, FIXED, MICA: 137 pF ±1%, 500 Vdc working; 0.460 in. long, 0.370 in. w, 0.190 in. thk; mfr 98738, dwg 21P228300-14.	7-57
A2A4A37C7		CAPACITOR, FIXED, MICA: 95 pF ±1%, 500 Vdc working; 0.460 in. long, 0.360 in. w, 0.180 in. thk; mfr 06845, dwg 4031978-0736.	7-57
A2A4A37C8		CAPACITOR, FIXED, MICA: 59 pF ±1%, 500 Vdc working; 0.450 in. long, 0.360 in. w, 0.170 in. thk; mfr 06845, dwg 4031978-0717.	7-57
A2A4A37C9		CAPACITOR, FIXED, MICA: 28 pF ±0.5% pF. 500 Vdc working; 0.450 in. long,0.360 in. w, 0.170 in. thk; mfr 06845, dwg 4031978-0704.	7-57
A2A4A37C10		CAPACITOR, FIXED, MICA: 257 pF ±1%, 500 Vdc working; 0.470 in. long, 0.390 in. w, 0.210 in. thk; mfr 98738, dwg 21P22830042.	7-57
A2A4A37C11		CAPACITOR, FIXED, MICA: 222 pF ±1%, 500 Vdc working; 0.460 in. long, 0.380 in. w,0.200 in. thk; mfr 98738, dwg 21P228300-36.	7-57
A2A4A37C12		CAPACITOR, FIXED, MICA: 193 pF ±1%, 500 Vdc working; 0.460 in. long, 0.380 in. w, 0.190 in. thk; mfr 98738, dwg 21P228300-30.	7-57
A2A4A37C13		CAPACITOR, FIXED, MICA: 167 pF ±1%, 500 Vdc working; 0.460 in. long, 0.380 in. w, 0.190 in. thk; mfr 98738, dwg 21P228300-24.	7-57
A2A4A37C14		CAPACITOR, FIXED, MICA: 146 pF ±1%, 500 Vdc working; 0.460 in. long, 0.370 in. w, 0.190 in. thk; mfr 98738, dwg 21P228300-18.	7-57
A2A4A37C15		CAPACITOR, FIXED, MICA: 127 pF ±1%, 500 Vdc working; 0.460 in. long, 0.370 in. w, 0.180 in. thk; mfr 98738, dwg 21P228300-11.	7-57
A2A4A37C16		CAPACITOR, FIXED, MICA: 110pF ±0.5%, 500 Vdc working; 0.460 in. long, 0.370 in. w, 0.180 in. thk; mfr 98738, dwg 21P228300-04.	7-57
A2A4A37C17		CAPACITOR: Item 6.	7-57
A2A4A37C18		CAPACITOR, FIXED, MICA: 83 pF ±1%, 500 Vdc working; 0.460 in. long, 0.360 in. w,0.180 in. thk; mfr 06845, dwg 4031978-0732.	7-57
A2A4A37C19		CAPACITOR, FIXED, MICA: 74 pF ±1%, 500 Vdc working; o.450 in. long, 0.360 in. w, 0.180 in. thk; mfr 06845, dwg 4031978-0728.	7-57

Table 7-2. Radio Receiver R-1051H/URR, Parts List (Continued)

RF AMPLIFIER ASSEMBLY A2A4

REFERENCE DESIGNATION	NOTES	NAME AND DESCRIPTION	FIGURE NUMBER
A2A4A37MP1		ROTOR: 2.982 in. dia, 0.420 in. thk; mfr 98738, part no. 01A228403-01.	7-21/ 7-57
A2A4A38		RF AMPLIFIER: 3.375 in. long, 1.56 in. w, 1.08 in. thk; mfr 98738, part no. 01A226162-21-11. (Attaching Parts) AL(3) AQ(3) AU(3)	7-58
A2A4A38C1 and A2A4A38C2		CAPACITOR: Item 16.	7-58
A2A4A38C3		CAPACITOR: Item 19.	7-58
A2A4A38C4 and A2A4A38C5		CAPACITOR: Item 16.	7-58
A2A4A38C6		CAPACITOR: Item 19.	7-58
A2A4A38C7		CAPACITOR: Item 16.	7-58
A2A4A38C8		CAPACITOR, FIXED, CERAMIC: 120 pF ±1%, 500 Vdc working; MIL type CMR05F121FPDM.	7-58
A2A4A38C9		CAPACITOR: Item 16.	7-58
A2A4A38C10		CAPACITOR; Item 19.	7-58
A2A4A38C11		CAPACITOR, FIXED, CERAMIC: 1,500 pF ±20%, 100 Vdc working; MIL type M39014/01-1441.	7-58
A2A4A38C12		CAPACITOR: Item 16.	7-58
A2A4A38C13		CAPACITOR, FIXED, CERAMIC: 1,500 pF ±20%, 100 Vdc working; MIL type M39014/01-1441.	7-58
A2A4A38C14		CAPACITOR, FIXED, CERAMIC: 56 pF ±10%, 200 Vdc working; MIL type M39014/01-1215.	7-58
A2A4A38E1		TERMINAL, LUG: 0.45 in. long, 0.18 in. w, mfr 00779, part no. 36467, 98738, dwg 29S132211-6. (Attaching Parts) AC(1) AL(1) DA(1)	7-58
A2A4A38FL1 thru A2A4A38FL3		SHIELDING BEAD, FERRITE: 0.138 in. OD, 0.047 in. ID, 0.118 in. long; mfr 78488, part no. 57-0180, 06845, dwg 205852-0701.	7-58
A2A4A38K1		RELAY, ARMATURE: 0 to 0.100 amp at 50 mVdc; MIL type M39016/6-104L. (Attaching parts) AD(2) AL(2) AQ(2)	7-58
A2A4A38L1		COIL, RF: 240 uH ±5%, dc resistance 7.80 ohm; MIL type MS90538-21.	7-58
A2A4A38Q1 thru A2A4A38Q3		TRANSISTOR: Silicon, PNP; mfr 04713, part no. 2N4959, 98738, dwg 48P226657-01.	7-58
A2A4A38R1		RESISTOR: Item 59.	7-58
A2A4A38R2		RESISTOR: Item 42.	7-58
A2A4A38R3		RESISTOR, FIXED, COMPOSITION: 5000 ohm ±5%, ¼ wp MIL type RCR07G562JS.	7-58

Table 7-2. Radio Receiver R-1051H/URR, Parts List (Continued)

RF AMPLIFIER ASSEMBLY A2A4

REFERENCE DESIGNATION	NOTES	NAME AND DESCRIPTION	FIGURE NUMBER
A2A4A38R4		RESISTOR: Item 41.	7-58
A2A4A38R5		RESISTOR: ITEM 44.	7-58
A2A4A38R6		RESISTOR, VARIABLE, NON-WIREWOUND: 200 ohm, ½ wp MIL type RJR24CP201M.	7-58
A2A4A38R7		RESISTOR: Item 37.	7-58
A2A4A38R8		Not used.	
A2A4A38R9		RESISTOR: Item 49.	7-58
A2A4A38R10		RESISTOR, FIXED, FILM: 6,200 ohm ±2%, ¼ w; MIL type RLR07C6201GR.	7-58
A2A4A38R11		RESISTOR, FIXED, FILM: 510 ohm ±2%, ¼ w; MIL type RLR07C5100GR.	7-58
A2A4A38R12		RESISTOR: Item 44.	7-58
A2A4A38R13		RESISTOR: Item 54.	7-58
A2A4A38R14		RESISTOR: Item 37.	7-58
A2A4A38R15		RESISTOR: Item 59.	7-58
A2A4A38R16		RESISTOR, FIXED, COMPOSITION: 1800 ohm ±5%, ¼ w; MIL type RCR07G182JS.	7-58
A2A4A38R17		RESISTOR, FIXED, FILM: 6200 ohm ±2%, ¼ w; MIL type RLR07C6201GR.	7-58
A2A4A38R18		RESISTOR, FIXED, FILM: 510 ohm ±2%, ¼ w; MIL type RLR07C5100GR.	7-58
A2A4A38R19		RESISTOR, FIXED, COMPOSITION: 39 ohm ±5%, ¼ w; MIL type RCR07G390JS.	7-58
A2A4A38R20		RESISTOR: Item 38.	7-58
A2A4A38R21		RESISTOR: Item 51.	7-58
A2A4A38TP1		CONNECTOR, ELECTRICAL, TEST-POINT TYPE: Item 20.	7-58
A2A4A38TP2		CONNECTOR, ELECTRICAL, TEST-POINT TYPE: 1500 V rms, 60 Hz; MIL type M39024/11-03.	7-58
A2A4A38W1		CABLE ASSEMBLY, RF: 1.75 in. long; mfr 98738, part no. 30A226790-21-11.	7-58
A2A4A38W2		CABLE ASSEMBLY, RF: 5.75 in. long; mfr 98738, part no. 30A226789-21-11.	7-58
A2A4A38W2P1		CONNECTOR, SUB-MINIATURE; 90° PLUG: 0.734 in. long x 0.492 in., mfr 71785, part no. 318-11-99-284, 98738, dwg 4032408-0730.	7-58

Table 7-2. Radio Receiver R-1051H/URR, Parts List (Continued)

FREQUENCY STANDARD ASSEMBLY A2A5

REFERENCE DESIGNATION	NOTES	NAME AND DESCRIPTION	FIGURE NUMBER
A2A5		FREQUENCY STANDARD ASSEMBLY: 4.437 in. long, 2.937 in. w, 4.470 in. h; mfr 98738, part no. 01A228785-01. (Attaching Parts) A2A5MP15 and A2A5MP16	7-59
A2A5C1 and A2A5C2		CAPACITOR: Item 68.	7-60
A2A5CR1		SEMICONDUCTOR DEVICE, DIODE: Zener, +20 Vac at 120 mA ±5%; mfr 12969, part no. UZ7720R, 98738, dwg 48P228789-01	7-60
A2A5E1 thru A2A5E4		Not used.	
A2A5E5		TERMINAL, LUG: 90° bend, 0.53 in. long, 0.23 in. dia; mfr 79963, part no. 124, 98738, dwg 29S133084-01. (Attaching Parts) AL(1) AR(1)	7-60
A2A5E6		TERMINAL: Brass; 0.156 in. dia, 0.375 in. long; 98738, dwg 29P230916. (Attaching Parts) AL(1) DA(1)	7-60
A2A5E7		TERMINAL, LUG: MIL type MS77068-1. (Attaching Parts) (AU(1) AR(1)	7-60
A2A5J1 and A2A5J2		Not used.	
A2A5J3		CONNECTOR, ELECTRICAL, PRINTED WIRING BOARD CARD INSERTION: MIL type M21097/1-019. (Attaching Parts) AU(2) AL(1) DA(2) A2A5E7	7-60
A2A5MP1		BASE PLATE: Aluminum alloy; 4.406 in. long, 2.906 in. w, 0.906 in. h; mfr 98738, part no. 01A228494-02. (Attaching Parts) FU(2)	7-60
A2A5MP2		SLEEVE ASSEMBLY: Polyurethane foam, 2.75 in. long, 1.875 in. w, 3.875 in. h; mfr 98738, part no. 01A226525-21-11. (Attaching Parts) FU(2)	7-60
A2A5MP3 and A2A5MP4		SPACER: Nylon; 0.562 in. long, 0.250 in. dia; mfr 98738, part no. 43P228454-01. (Attaching Parts) M(2) AB(2)	7-60
A2A5MP5		OVEN COVER SUBASSEMBLY: Plastic; 2.50 in. long, 1.437 in. w, mfr 98738, part no. 15A228561-01. (Attaching Parts) AL(2) AR(2) AU(2) CV(1)	7-60
A2A5MP6		DIAL, INDICATOR: Nylon; 1.687 in. dia, 0.188 in. thk; mfr 98738, part no. 34P226544-21-11. (Attaching Parts) DC(1) DY(1) A2A5MP9	7-60
A2A5MP7		SPACER: Teflon; 0.250 in. dia, 0.219 in. long; mfr 98738, part no. 43P226537-22-11.	7-60

Table 7-2. Radio Receiver R-1051H/URR, Parts List (Continued

FREQUENCY STANDARD ASSEMBLY A2A5

REFERENCE DESIGNATION	NOTES	NAME AND DESCRIPTION	FIGURE NUMBER
A2A5MP8		Not used.	
A2A5MP9		SPRING, WASHER: Phosphor bronze, cadmium plated; 0.50 in. OD, 0.25 in. ID; mfr 78189, part no. 3702-14-47; 98738, dwg 04P226633-01.	7-60
A2A5MP10		SPRING, COMPRESSION: Cres, 0.250 in. long, 0.088 in. dia; mfr 70472, part no. C0088-012-0250S; 98738, dwg 41P226642-21-11.	7-60
A2A5MP11		Not used.	
A2A5MP12		KNOB, CONTROL: Molded black nylon; 0.50 in. long, 0.355 in. dia; mfr 98738, part no. 36P226546-21-11.	7-59
A2A5MP13		COVER: Aluminum alloy; 4.375 in. long, 2.750 in. w, 3.875 in. h; mfr 98738, part no. 15P228495-03. (Attaching Parts) AL(5) AQ(5)	7-59
A2A5MP14		PLUG, PROTECTIVE: Nylon; 0.344 in. dia, 0.031 in. thk, 0.172 in. long; mfr 78189, part no. 207-120241-05-0103; 98738, dwg 09P226623-01.	7-59
A2A5MP15 and A2A5MP16		SCREW, CAPTIVE: Cres; 4.690 in. long, 0.218 in. dia, 10-32 UNF-2A threads; mfr 98738, part no. 03P226540-21-11.	7-59
A2A5MP17 and A2A5MP18		STRAP, TIEDOWN: MIL type MS3367-4-9.	7-60
A2A5MP19		BRACKET: 1.312 in. w, 1.656 in. long; mfr 98738, part no. 07P228839-01. (Attaching Parts) AL(2) AQ(2)	7-60
A2A5P1		CONNECTOR, ELECTRICAL: 2.729 in. long, 0.494 in. w, 0.426 in. thk; mfr 71468, part no. DCM13W6P-F115; 98738, dwg 09P226606-01. (Attaching Parts) DD(2)	7-60
A2A5R1		RESISTOR, FIXED, WIRE-WOUND: 100 ohm ±1%, 10 w: MIL type RER65F1000R. (Attaching Parts) T(2) EN(2)	7-60
A2A5W1 and A2A5W2		CABLE ASSEMBLY, SHIELDED: 4.50 in. long; connector installed one end; mfr 98738, part no. 01A226526-21-11.	7-60
A2A5W3		CABLE ASSEMBLY, SHIELDED: 6.0 in. long; connector installed one end; mfr 98738, part no. 01A226526-22-11.	7-60
A2A5W4		CABLE ASSEMBLY, SHIELDED: 4.50 in. long; connector installed one end; mfr 98738, part no. 30A226512-21-11.	7-60
A2A5W5		CABLE ASSEMBLY, SHIELDED: 3.50 in. long; connector installed one end; mfr 98738, part no. 01A226526-23-11.	7-60

Table 7-2. Radio Receiver R-1051H/URR, Parts List (Continued)

FREQUENCY STANDARD ASSEMBLY A2A5

REFERENCE DESIGNATION	NOTES	NAME AND DESCRIPTION	FIGURE NUMBER
A2A5W6		CABLE ASSEMBLY, SHIELDED: 6.0 in. long; connector installed one end; mfr 98738, part no. 01A226526-24-11.	7-60
A2A5W7	2	CABLE ASSEMBLY, SHIELDED: 4.50 in. long; mfr 98738, part no. 30A226513-21-11.	7-60
A2A5A1		OSCILLATOR AND OVEN CONTROL ASSEMBLY: 2.968 in. long, 1.781 in. w; mfr 98738, part no. 01A228568-01.	7-61
A2A5A1C1		CAPACITOR, FIXED, MICA: 680 pF ±5%, 500 Vdc working; MIL type CMR06F681JODL.	7-61
A2A5A1C2		CAPACITOR, VARIABLE: 0.8 pF to 12 pF, 1500 Vdc working; mfr 18736, part no. V1502, 98738, dwg 19P226601-01.	7-61
A2A5A1C3		CAPACITOR, VARIABLE, CERAMIC DIELECTRIC: 9 pf 50 35 pF, 200 Vdc working; MIL type CV32D350.	7-61
A2A5A1C4		CAPACITOR, FIXED, MICA: 180 pF ±5%, 500 Vdc working; MIL type CMR04F181JODL.	7-61
A2A4A1C5		CAPACITOR, FIXED, MICA: 220 pF ±5%, 500 Vdc working; MIL type CMR04F221JODL.	7-61
A2A5A1C6		CAPACITOR: Item 68.	7-61
A2A5A1C7		CAPACITOR, FIXED, ELECTROLYTIC: 3.3 uF ±20%, 15 Vdc working; MIL type M39003/01-2269.	7-61
A2A5A1C8	1	CAPACITOR, FIXED, MICA: Same as A2A5A1C11.	7-61
A2A5A1C9		Not used.	
A2A5A1C10		CAPACITOR, FIXED, CERAMIC: 0.01 uF ±10%, 100 Vdc working; MIL type M39014/01-1535.	7-61
A2A5A1C11A	1	CAPACITOR, FIXED, MICA: 82 pF ±5%, 500 Vdc working; MIL type CMR04E820JODL.	7-61
A2A5A1C11B	1	CAPACITOR, FIXED, MICA: 100 pF ±5%, 500 Vdc working; MIL type CMR04F101JODL.	7-61
A2A5A1C11C	1	CAPACITOR, FIXED, MICA: 120 pF ±5%, 500 Vdc working; MIL type CMR04F121JODL.	7-61
A2A5A1C11D	1	CAPACITOR, FIXED, MICA: 130 pF ±5%, 500 Vdc working; MIL type CMR04F131JODL.	7-61
A2A5A1C11E	1	CAPACITOR, FIXED, MICA: 160 pF ±5%, 500 Vdc working; MIL type CMR04F161JODL.	7-61
A2A5A1C11F	1	CAPACITOR, FIXED, MICA: 68 pF ±5%, 500 Vdc working; MIL type CMR043680JODL.	7-61
A2A5A1C11G	1	CAPACITOR, FIXED, MICA: 180 pF ±5, 500 Vdc working, MIL type CMR04F181JODL.	7-61
A2A5A1C11H	1	CAPACITOR, FIXED, MICA: 200 pF ±5, 500 Vdc working, MIL type CMR04F201JODL.	7-61

Table 7-2. Radio Receiver R-1051H/URR, Parts List (Continued)

FREQUENCY STANDARD ASSEMBLY A2A5

REFERENCE DESIGNATION	NOTES	NAME AND DESCRIPTION	FIGURE NUMBER
A2A5A1C11I	1	CAPACITOR, FIXED, MICA: 220 pF ±5, 500 Vdc working, MIL type CMR04F221JODL.	7-61
A2A5A1C11J	1	CAPACITOR, FIXED, MICA: 250 pF ±5, 500 Vdc working, MIL type CMR04F251JODL.	7-61
A2A5A1CR1		SEMICONDUCTOR DEVICE, DIODE: Silicon, voltage regulator; MIL type JAN1N758A.	7-61
A2A5A1CR2		SEMICONDUCTOR DEVICE, DIODE: MIL type JAN1N4148.	7-61
A2A5A1E1		Not used. (Wiring termination, for reference only).	7-61
A2A5A1E2 and A2A5A1E3		CONTACT: Phosphor bronze; 0.600 in. long, 0.101 in. w, mfr 91506, part no. 8004-4P40, 98738, dwg 09P226617-01.	7-61
A2A5A1MP1		BRACKET, CRYSTAL HOLDER: Aluminum alloy 0.937 in. long, 0.625 in. w, 0.062 in. thk; mfr 98738, part no. 07P226639-21-11.	7-61
A2A5A1MP2		SPACER, CRYSTAL HOLDER: Aluminum alloy; 0.687 in. long, 0.50 in. w,0.125 in. thk; mfr 98738, part no. 43P226640-21-11.	7-61
A2A5A1MP3		CLIP, CRYSTAL HOLDER: Spring steel; 0.50 in. long, 0.758 in. w, 0.40 in. h; mfr 99378, part no. 100-206-8; 98738, dwg 42P226625-07.	7-61
A2A5A1MP4		GROMMET: Neoprene; 0.375 in. long, 0.250 in. dia, 0.375 in dia. at shoulder; mfr 70485, part no. 962, 98738, dwg 05P226616-01. (Attaching Parts) DE(2)	7-61
A2A5A1MP5		PAD, TRANSISTOR MOUNTING: 0.35 in. OD, 0.20 in. ID, 0.20 in. thk; mfr 13103, part no. 7717-15, 98738, dwg 14S132171-11A-9.	7-61
A2A5A1P1 thru A2A5A1P5		CONNECTOR, PCB CONTACT: Phosphor bronze, 0.127 in. long; mfr 91662, part no. 02-005-046-5-200-100; 98738, dwg 09P226602-01.	7-61
A2A5A1Q1 thru A2A5A1Q5		TRANSISTOR: MIL type JAN2N706.	7-61
A2A5A1Q6		TRANSISTOR: MIL type JAN2N2907A.	7-61
A2A5A1Q7		TRANSISTOR: MIL type JAN2N697.	7-61
A2A5A1R1		RESISTOR, FIXED, COMPOSITION: 120k ohm ±5%, ¼ w; MIL type RLR07C51R0GR.	7-61
A2A5A1R2		RESISTOR, FIXED, FILM: 51 ohm ±2%, ¼ w; MIL type RLR07C51R0GR	7-61
A2A5A1R3		RESISTOR, FIXED, FILM: 1k ohm ±2%, ¼ w; MIL type RLR07C1001GR.	7-61
A2A5A1R4		RESISTOR, FIXED, COMPOSITION: 82k ohm ±5%, ¼ w; MIL type RCR07G823JS.	7-61

Table 7-2. Radio Receiver R-1051H/URR, Parts List (Continued)

FREQUENCY STANDARD ASSEMBLY A2A5

REFERENCE DESIGNATION	NOTES	NAME AND DESCRIPTION	FIGURE NUMBER
A2A5A1R5		RESISTOR, FIXED, COMPOSITION: 15k ohm ±5%, ¼ w; MIL type RCR07G153JS.	7-61
A2A5A1R6		RESISTOR: Item 53.	7-61
A2A5A1R7		RESISTOR, FIXED, COMPOSITION: 1500 ohm ±5% ¼ w; MIL type RCR07G152JS.	7-61
A2A5A1R8		RESISTOR: Item 46.	7-61
A2A5A1R9		RESISTOR, FIXED, WIRE-WOUND: 270 ohm ±5%, ½ w; MIL type RCR20G271JS.	7-61
A2A5A1R10A	1	RESISTOR: Item 39.	7-61
A2A5A1R10B	1	RESISTOR, FIXED, COMPOSITION: 18k ohm ±5%, ¼ w; MIL type RCR07G183JS.	7-61
A2A5A1R10C	1	RESISTOR: Item 70.	7-61
A2A5A1R10D	1	RESISTOR, FIXED, COMPOSITION: 39k ohm ±5%, ¼ w; MIL type RCR07G393JS.	7-61
A2A5A1R10E	1	RESISTOR: Item 56.	7-61
A2A5A1R11		RESISTOR: Item 39.	7-61
A2A5A1R12		RESISTOR: Item 46.	7-61
A2A5A1R13 and A2A5A1R14		RESISTOR, FIXED, FILM: 4700 ohm ±2%, ¼ w; MIL type RLR07C4701GR.	7-61
A2A5A1R15		RESISTOR, VARIABLE, WIRE-WOUND: 1k ohm ±5%, 3/4 w; MIL type M39015/02-004XM.	7-61
A2A5A1R16A	1	RESISTOR, FIXED, FILM: 3300 ohm ±2%, ¼ w; MIL type RLR07C3301GR.	7-61
A2A5A1R16B	1	RESISTOR, FIXED, FILM: 3900 ohm ±2%, ¼ w; MIL type RLR07C3901GR.	7-61
A2A5A1R16C	1	RESISTOR, FIXED, FILM: 4300 ohm ±2%, ¼ w; MIL type RLR07C4301GR.	7-61
A2A5A1R16D	1	RESISTOR, FIXED, FILM: 4700 ohm ±2%, ¼ w; MIL type RLR07C4701GR.	7-61
A2A5A1R16E	1	RESISTOR, FIXED, FILM: 5600 ohm ±2%, ¼ w; MIL type RLR07C5601GR.	7-61
A2A5A1R17 and A2A5A1R18		RESISTOR, FIXED, COMPOSITION: 12k ohm ±5%, ¼ w; MIL type RCR07G123JS.	7-61
A2A5A1R19 and A2A5A1R20		RESISTOR: Item 39.	7-61
A2A5A1R21		RESISTOR: Item 46.	7-61
A2A5A1R22		RESISTOR, FIXED, COMPOSITION: 330 ohm ±5%, ¼ w; MIL type RCR07G331JS.	7-61
A2A5A1R23A	1	RESISTOR, FIXED, COMPOSITION: 1.2 megohm ±5%, ¼ w; MIL type RCR07G125JS.	7-61
A2A5A1R23B	1	RESISTOR, FIXED, COMPOSITION: 1.8 megohm ±5%, ¼ w; MIL type RCR07G185JS.	7-61

Table 7-2. Radio Receiver R-1051H/URR, Parts List (Continued)

FREQUENCY STANDARD ASSEMBLY A2A5

REFERENCE DESIGNATION	NOTES	NAME AND DESCRIPTION	FIGURE NUMBER
A2A5A1R23C	1	RESISTOR, FIXED, COMPOSITION: 2.7 megohm ±5%, ¼ w; MIL type RCR07G275JS.	7-61
A2A5A1R23D	1	RESISTOR, FIXED, COMPOSITION: 390k ohm ±5%, ¼ w; MIL type RCR07G394JS.	7-61
A2A5A1R23E	1	RESISTOR, FIXED, COMPOSITION: 470k ohm ±5%, ¼ w; MIL type RCR07G474JS.	7-61
A2A5A1R23F	1	RESISTOR, FIXED, COMPOSITION: 560k ohm ±5%, ¼ w; MIL type RCR07G564JS.	7-61
A2A5A1R23G		RESISTOR, FIXED, COMPOSITION: 680k ohm ±5%, ¼ w; MIL type RCR07G684JS.	7-61
A2A5A1R23H	1	RESISTOR, FIXED, COMPOSITION: 820k ohm ±5%, ¼ w; MIL type RCR07G824JS.	7-61
A2A5A1R24		RESISTOR: Item 41.	7-61
A2A5A1Y1		CRYSTAL, QUARTZ, 5 MHZ; In glass holder; 0.795 in. long, 0.757 in. w, 0.352 in. thk; mfr 98738, part no. 48P228436-01.	7-61
A2A5A2		CARD CIRCUIT ASSEMBLY, DIVIDER/AMPLIFIER: 4-1/16 in. long, 3-13/16 in. w; mfr 98738, part no. 01A228385-01.	7-62
A2A5A2C1		CAPACITOR: Item 67.	7-62
A2A5A2C2		CAPACITOR, FIXED, MICA: 390 pf ±5%, 500 Vdc working; MIL type CMR04F301J0CL.	7-62
A2A5A2C3 and A2A5A2C4		CAPACITOR: Item 68.	7-62
A2A5A2C5		CAPACITOR: Item 67.	7-62
A2A5A2C6		CAPACITOR: Item 68.	7-62
A2A5A2C7		CAPACITOR, VARIABLE, CERAMIC DIELECTRIC: 15 pF to 60 pF, 200 Vdc working; MIL type CV31E600.	7-62
A2A5A2C8		CAPACITOR, FIXED, MICA: 680 pF ±5%, 500 Vdc working; MIL type CCR06CG681JM.	7-62
A2A5A3C9		CAPACITOR, FIXED, MICA: 220 pF ±5%, 500 Vdc working; MIL type CMR04F221J0DL.	7-62
A2A5A2C10		CAPACITOR: Item 67.	7-62
A2A5A2C11		CAPACITOR: Item 68.	7-62
A2A5A2C12		CAPACITOR, FIXED, MICA: 30 pF ±5%, 500 Vdc working; MIL type CMR04E300JODL.	7-62
A2A5A2C13		CAPACITOR, VARIABLE, CERAMIC DIELECTRIC: 9 pF to 35 pF, 200 Vdc working; MIL type CV31D350.	7-62
A2A5A2C14		CAPACITOR: Item 67.	7-62
A2A5A2C15		CAPACITOR: Item 68.	7-62

Table 7-2. Radio Receiver R-1051H/URR, Parts List (Continued)

FREQUENCY STANDARD ASSEMBLY A2A5

REFERENCE DESIGNATION	NOTES	NAME AND DESCRIPTION	FIGURE NUMBER
A2A5A2C16		CAPACITOR, VARIABLE, CERAMIC DIELECTRIC: 15 pF to 60 pF, 200 Vdc working; MIL type CV31E600.	7-62
A2A5A2C17		CAPACITOR: Item 67.	7-62
A2A5A2C18		CAPACITOR, FIXED, MICA: 1500 pF ±5%, 500 Vdc working; MIL type CCR06CG152JM.	7-62
A2A5A2C19		CAPACITOR, FIXED, MICA: 680 pF ±5%, 500 Vdc working; MIL type CCR06CG681JM.	7-62
A2A5A2C20		CAPACITOR: Item 68.	7-62
A2A5A2C21		CAPACITOR, FIXED, MICA: 330 pF ±5%, 500 Vdc working; MIL type CMR04F331JOAL.	7-62
A2A5A2C22		CAPACITOR, VARIABLE, CERAMIC: 15 pF to 60 pF, 200 Vdc working; MIL type CV31E600.	7-62
A2A5A2C23		CAPACITOR, FIXED, MICA: 150 pF ±55, 500 Vdc working; MIL type CMR04F151JODL.	7-62
A2A5A2C24		CAPACITOR: Item 68.	7-62
A2A5A2C25		CAPACITOR: Itwm 67.	7-62
A2A5A2C26		CAPACITOR: Item 68.	7-62
A2A5A2C27		CAPACITOR, FIXED, MICA: 68 pF ±5%, 500 Vdc working; MIL type CMR04E680JODL.	7-62
A2A5A2C28		CAPACITOR, FIXED, MICA: 33 pF ±5%, 500 Vdc working; MIL type CMR04E330JODL.	7-62
A2A5A2C29		CAPACITOR: Item 68.	7-62
A2A5A2C30		CAPACITOR, FIXED, MICA: 33 pF ±5%, 500 Vdc working; MIL type CMR04E330JODL.	7-62
A2A5A2C31		CAPACITOR, VARIABLE, CERAMIC DIELECTRIC: 9 pF to 35 pF, 200 Vdc working; MIL type CV31D350.	7-62
A2A5A2C32		CAPACITOR, FIXED, MICA: 1500 pF ±5%, 500 Vdc working; MIL type CCR06CG152JM.	7-62
A2A5A2C33		CAPACITOR, VARIABLE, CERAMIC DIELECTRIC: 9 pF to 35 pF, 200 Vdc working; MIL type CV31D350.	7-62
A2A5A2C34		CAPACITOR: Item 68.	7-62
A2A5A2C35		CAPACITOR, FIXED, MICA: 68 pF ±5%, 500 Vdc working; MIL type CMR04E680JODL.	7-62
A2A5A2C36		CAPACITOR: Item 68.	7-62
A2A5A2C37		CAPACITOR, FIXED, MICA: 56 pF ±5%, 500 Vdc working; MIL type CMR04E560JODL.	7-62
A2A5A2C38		CAPACITOR, VARIABLE, CERAMIC DIELECTRIC: 9 pF to 35 pF, 200 Vdc working; MIL type CV31D350.	7-62
A2A5A2C39		CAPACITOR, FIXED, MICA: 91 pF ±5%, 500 Vdc working; MIL type CMR04F910JODL.	7-62
A2A5A2C40		CAPACITOR, FIXED, MICA: 1200 pF ±5%, 500 Vdc working; MIL type CCR06CG122JM.	7-62

Table 7-2. Radio Receiver R-1051H/URR, Parts List (Continued)

FREQUENCY STANDARD ASSEMBLY A2A5

REFERENCE DESIGNATION	NOTES	NAME AND DESCRIPTION	FIGURE NUMBER
A2A5A2C41 thru A2A5A2C43		Not used.	
A2A5A2C44A	1	CAPACITOR, FIXED, MICA: 10 pF ±5%, 500 Vdc working; MIL type CMR04C100DODL.	7-62
A2A5A2C44B	1	CAPACITOR, FIXED, MICA: 22 pF ±5%, 500 Vdc working; MIL type CMR04E220JODL.	7-62
A2A5A2C44C	1	CAPACITOR, FIXED, MICA: 27 pF ±5%, 500 Vdc working, MIL type CMR04E270JODL.	7-62
A2A5A2C44D	1	CAPACITOR, FIXED, MICA: 39 pF ±5%, 500 Vdc working; MIL type CMR04E390JODL.	7-62
A2A5A2C44E	1	CAPACITOR, FIXED, MICA: 47 pF ±5%, 500 Vdc working; MIL type CMR04E470JODL.	7-62
A2A5A2C44F	1	CAPACITOR, FIXED, MICA; 82 pF ±5%, 500 Vdc working; MIL type CMR04E820JODL.	7-62
A2A5A2C44G	1	CAPACITOR, FIXED, MICA: 100 pF ±5%, 500 Vdc working; MIL type CMR04F101JODL.	7-62
A2A5A2DS1		LAMP, LED: 2.1V, 105 mW; 72619, part no. 550-2306, 98738, dwg 65P228558-01.	7-62
A2A5A2FL1 and A2A5A2FL2	2	SHIELDING BEAD, ELECTRONIC: 0.138 IN OD, 0.008 in. ID, 0.118 in. long; mfr 02114, part no. 5659065/4b, 98738, dwg 08S132201-3.	7-62
A2A5A2L1		CHOKE: 120 uH ±5%, 75 milliamps; MIL type MS90538-14.	7-62
A2A5A2L2		CHOKE: 200 uH ±5%, 150 milliamps; MIL type MS90538-19.	7-62
A2A5A2L3		CHOKE: 6.80 uH ±10%, 395 milliamps; MIL type MS14046-2.	7-62
A2A5A2L4		CHOKE: 8.2 uH ±10%, 290 milliamps; MIL type MS14046-3.	7-62
A2A5A2MP1		BRACKET, ASSEMBLY: Alum. alloy; 0.937 in. long, 0.812 in. w, 1.187 in. h; mfr 98738, part no. 01A226519-21-11. (Attaching Parts) DG(2).	7-62
A2A5A2Q1		TRANSISTOR: MIL type JAN2N706.	7-62
A2A5A2Q2 and A2A5A2Q3		TRANSISTOR: Item 64.	7-62
A2A5A2Q4 thru A2A5A2Q8		TRANSISTOR: MIL type JAN2N706.	7-62
A2A5A2Q9		TRANSISTOR: Item 64.	7-62
A2A5A2R1		RESISTOR: Item 38.	7-62
A2A5A2R2		RESISTOR: Item 39.	7-62
A2A5A2R3		RESISTOR: Item 40.	7-62
A2A5A2R4		RESISTOR: Item 46.	7-62

Table 7-2. Radio Receiver R-1051H/URR, Parts List (Continued)

FREQUENCY STANDARD ASSEMBLY A2A5

REFERENCE DESIGNATION	NOTES	NAME AND DESCRIPTION	FIGURE NUMBER
A2A5A2R5		RESISTOR: Item 40.	7-62
A2A5A2R6		RESISTOR: Item 39.	7-62
A2A5A2R7		RESISTOR: Item 46.	7-62
A2A5A2R8		RESISTOR: Item 35.	7-62
A2A5A2R9		RESISTOR, FIXED, COMPOSITION: 1500 ohm ±5%, ¼ w; MIL type RCR07G152JS.	7-62
A2A5A2R10		RESISTOR: Item 55.	7-62
A2A5A2R11		RESISTOR: Item 38.	7-62
A2A5A2R12		RESISTOR: Item 39.	7-62
A2A5A2R13		RESISTOR, FIXED, COMPOSITION: 3900 ohm ±5%, ¼ w; MIL type RCR07G392JS.	7-62
A2A5A2R14		RESISTOR, FIXED, COMPOSITION: 68k ohm ±5%, ¼ w; MIL type RCR07G683JS.	7-62
A2A5A2R15		RESISTOR, FIXED, COMPOSITION: 6800 ohm ±5%, ¼ w; MIL type RCR07G682JS.	7-62
A2A5A2R16		RESISTOR, FIXED, COMPOSITION: 560 ohm ±5%, ¼ w; MIL type RCR07G561JS.	7-62
A2A5A2R17A	1	RESISTOR, FIXED, COMPOSITION: 27 ohm ±5%, ¼ w; MIL type RCR07G270JS.	7-62
A2A5A2R17B	1	RESISTOR: Item 51.	7-62
A2A5A2R17C	1	RESISTOR, FIXED, COMPOSITION: 39 ohm ±5%, ¼ w; MIL type RCR07G390JS.	7-62
A2A5A2R17D	1	RESISTOR: Item 53.	7-62
A2A5A2R17E	1	RESISTOR, FIXED, COMPOSITION: 56 ohm ±5%, ¼ w; MIL type RCR07G560JS.	7-62
A2A5A2R17F	1	RESISTOR, FIXED, COMPOSITION: 68 ohm ±5%, ¼ w; MIL type RCR07G680JS.	7-62
A2A5A2R17G	1	RESISTOR: Item 44.	7-62
A2A5A2R17H	1	RESISTOR: Item 37.	7-62
A2A5A2R17J	1	RESISTOR, FIXED, COMPOSITION: 120 ohm ±5%, ¼ w; MIL type RCR07G121JS.	7-62
A2A5A2R17K	1	RESISTOR, FIXED, COMPOSITION: 150 ohm ±5%, ¼ w; MIL type RCR07G151JS.	7-62
A2A5A2R17L	1	RESISTOR, FIXED, COMPOSITION: 180 ohm ±5%, ¼ w; MIL type RCR07G181JS.	7-62
A2A5A2R17M	1	RESISTOR: Item 45.	7-62
A2A5A2R18A	1	RESISTOR, FIXED, COMPOSITION: 68 ohm ±5%, ¼ w; MIL type RCR07G680JS.	7-62
A2A5A2R18B	1	RESISTOR: Item 44.	7-62
A2A5A2R18C	1	RESISTOR: Item 37.	7-62
A2A5A2R19		RESISTOR: Item 39.	7-62
A2A5A2R20		RESISTOR: Item 40.	7-62
A2A5A2R21 and A2A5A2R22		RESISTOR: Item 39.	7-62

Table 7-2. Radio Receiver R-1051H/URR, Parts List (Continued)

FREQUENCY STANDARD ASSEMBLY A2A5

REFERENCE DESIGNATION	NOTES	NAME AND DESCRIPTION	FIGURE NUMBER
A2A5A2R23 thru A2A5A2R25		RESISTOR: Item 55.	7-62
A2A5A2R26		RESISTOR: Item 46.	7-62
A2A5A2R27		RESISTOR: Item 37.	7-62
A2A5A2R28		RESISTOR: Item 39.	7-62
A2A5A2R29		RESISTOR: Item 38.	7-62
A2A5A2R30A	1	RESISTOR, FIXED, COMPOSITION: 27 ohm ±5%, ¼ w; MIL type RCR07G270JS.	7-62
A2A5A2R30B	1	RESISTOR: Item 51.	7-62
A2A5A2R30C	1	RESISTOR, FIXED, COMPOSITION: 39 ohm ±5%, ¼ w; MIL type RCR07G390JS.	7-62
A2A5A2R30D	1	RESISTOR: Item 53.	7-62
A2A5A2R30E	1	RESISTOR, FIXED, COMPOSITION: 56 ohm ±5%, ¼ w; MIL type RCR07G560JS.	7-62
A2A5A2R30F	1	RESISTOR, FIXED, COMPOSITION: 68 ohm ±5%, ¼ w; MIL type RCR07G680JS.	7-62
A2A5A2R30G	1	RESISTOR: Item 44.	7-62
A2A5A2R30H	1	RESISTOR: Item 37.	7-62
A2A5A2R30J	1	RESISTOR, FIXED, COMPOSITION: 120 ohm ±5%, ¼ w; MIL type RCR07G121JS.	7-62
A2A5A2R30K	1	RESISTOR, FIXED, COMPOSITION: 150 ohm ±5%, ¼ w; MIL type RCR07G151JS.	7-62
A2A5A2R30L	1	RESISTOR, FIXED, COMPOSITION: 180 ohm ±5%, ¼ w; MIL type RCR07G181JS.	7-62
A2A5A2R30M	1	RESISTOR: Item 45.	7-62
A2A5A2R31A	1	RESISTOR, FIXED, COMPOSITION: 22 ohm ±5%, ¼ w; MIL type RCR07G220JS.	7-62
A2A5A2R31B	1	RESISTOR: Item 51.	7-62
A2A5A2R31C	1	RESISTOR: Item 53.	7-62
A2A5A2R32		RESISTOR: Item 38.	7-62
A2A5A2R33	1	RESISTOR, FIXED, COMPOSITION: 680 ohm ±5%, ¼ w; MIL type RCR07G681JS.	7-62
A2A5A2R34		RESISTOR: Item 40.	7-62
A2A5A2R35		Not used.	
A2A5A2R36		RESISTOR: Item 46.	7-62
A2A5A2R37		RESISTOR, FIXED, COMPOSITION: 1500 ohm ±5%, ¼ w; MIL type RCR07G152JS.	7-62
A2A5A2R38		RESISTOR: Item 39.	7-62
A2A5A2R39		RESISTOR: Item 46.	7-62
A2A5A2R40		RESISTOR: Item 37.	7-62
A2A5A2R41		RESISTOR: Item 55.	7-62
A2A5A2R42		RESISTOR: Item 35.	7-62
A2A5A2R43A	1	RESISTOR, FIXED, COMPOSITION: 390 ohm ±5%, ¼ w; MIL type RCR07G391JS.	7-62

Table 7-2. Radio Receiver R-1051H/URR, Parts List (Continued)

FREQUENCY STANDARD ASSEMBLY A2A5

REFERENCE DESIGNATION	NOTES	NAME AND DESCRIPTION	FIGURE NUMBER
A2A5A2R43B	1	RESISTOR, FIXED, COMPOSITION: 470 ohm ±5%, ¼ w; MIL type RCR07G471JS.	7-62
A2A5A2R43C	1	RESISTOR, FIXED, COMPOSITION: 560 ohm ±5%, ¼ w; MIL type RCR07G561JS.	7-62
A2A5A2R44A	1	RESISTOR, FIXED, COMPOSITION: 2.7 ohm ±5%, ¼ w; MIL type RCR07G2R7JS.	7-62
A2A5A2R44B	1	RESISTOR, FIXED, COMPOSITION: 3.3 ohm ±5%, ¼ w; MIL type RCR07G3R3JS.	7-62
A2A5A2R44C	1	RESISTOR, FIXED, COMPOSITION: 3.9 ohm ±5%, ¼ w; MIL type RCR07G3R9JS.	7-62
A2A5A2R44D	1	RESISTOR, FIXED, COMPOSITION: 4.7 ohm ±5%, ¼ w; MIL type RCR07G4R7JS.	7-62
A2A5A2R44E	1	RESISTOR, FIXED, COMPOSITION: 5.6 ohm ±5%, ¼ w; MIL type RCR07G5R6JS.	7-62
A2A5A2R44F	1	RESISTOR, FIXED, COMPOSITION: 6.8 ohm ±5%, ¼ w; MIL type RCR07G6R8JS.	7-62
A2A5A2R44G	1	RESISTOR, FIXED, COMPOSITION: 8.2 ohm ±5%, ¼ w; MIL type RCR07G8R2JS.	7-62
A2A5A2R44H	1	RESISTOR: Item 36.	7-62
A2A5A2R45 and A2A5A2R46		RESISTOR: Item 39.	7-62
A2A5A2R47		RESISTOR: Item 33.	7-62
A2A5A2R48		RESISTOR: Item 38.	7-62
A2A5A2R49A	1	RESISTOR, FIXED, COMPOSITION: 27 ohm ±5%, ¼ w; MIL type RCR07G270JS.	7-62
A2A5A2R49B	1	RESISTOR: Item 51.	7-62
A2A5A2R49C	1	RESISTOR, FIXED, COMPOSITION: 39 ohm ±5%, ¼ w; MIL type RCR07G390JS.	7-62
A2A5A2R49D	1	RESISTOR: Item 53.	7-62
A2A5A2R49E	1	RESISTOR, FIXED, COMPOSITION: 56 ohm ±5%, ¼ w; MIL type RCR07G560JS.	7-62
A2A5A2R49F	1	RESISTOR, FIXED, COMPOSITION: 68 ohm ±5%, ¼ w; MIL type RCR07G680JS.	7-62
A2A5A2R49G	1	RESISTOR: Item 44.	7-62
A2A5A2R49H	1	RESISTOR: Item 37.	7-62
A2A5A2R49J	1	RESISTOR, FIXED, COMPOSITION: 120 ohm ±5%, ¼ w; MIL type RCR07G121JS.	7-62
A2A5A2R49K	1	RESISTOR, FIXED, COMPOSITION: 150 ohm ±5%, ¼ w; MIL type RCR07G151JS.	7-62
A2A5A2R49L	1	RESISTOR, FIXED, COMPOSITION: 180 ohm ±5%, ¼ w; MIL type RCR07181JS.	7-62
A2A5A2R49M	1	RESISTOR: Item 45.	7-62

Table 7-2. Radio Receiver R-1051H/URR, Parts List (Continued)

FREQUENCY STANDARD ASSEMBLY A2A5

REFERENCE DESIGNATION	NOTES	NAME AND DESCRIPTION	FIGURE NUMBER
A2A5A2R50 and A2A5A2R51		Not used.	
A2A5A2R52		RESISTOR, FIXED, COMPOSITION: 1500 ohm ±5%, ½ w; MIL type RCR20G152JS.	7-62
A2A5A2R53 thru A2A5A2R55		Not used.	
A2A5A2R56		RESISTOR, FIXED, COMPOSITION: 510 ohm ±5%, ¼ w; MIL type RCR07G511JS.	7-62
A2A5A2R57 thru A2A5A2R59		Not used.	
A2A5A2R60		RESISTOR, FIXED, COMPOSITION: 680 ohm ±5%, ¼ w; MIL type RCR07G681JS.	7-62
A2A5A2R61		RESISTOR: Item 38.	7-62
A2A5A2R62		RESISTOR: Item 39.	7-62
A2A5A2S1		SWITCH, ROTARY: Three pole, three position; 0.562 in. body dia, 0.94 in. long; mfr 51073, part no. 51MY23035-3-03N; 98738, dwg 40P228373-01.	7-62
A2A5A2T1		TRANSFORMER, RF: 240 uH primary inductance, 21 turn secondary; 0.375 in. long, 0.155 in. dia; mfr 98738, part no. 24A226607-23-11.	7-62
A2A5A2T2		TRANSFORMER, RF: 240 uH primary inductance, 10 turn secondary; 0.375 in. long, 0.155 in. dia; mfr 98738, part no. 24P226607-22-11.	7-62
A2A5A2T3		TRANSFORMER, RF: 10 uH primary inductance, 3/4 turn secondary; 0.375 in. long, 0.155 in. dia; mfr 98738, part no. 24P226607-21-11.	7-62
A2A5A3		OVEN CAN WIRING ASSEMBLY: Mfr 98738, part no. 01A228744-01. (Attaching Parts) FU(2)	7-63
A2A5A3E1		LUG, SOLDER: MIL type MS77068-1. (Attaching Parts) AQ(1) AU(1) FW(1)	7-63
A2A5A3E2 and A2A5A3E3		TERMINAL, TURRET: MIL type SE089B01S.	7-63
A2A5A3J1		CONNECTOR ASEMBLY: Copper clad plastic, five contacts; 1.39 in. long, 0.25 in. w; mfr 98738, part no. 01A226509-21-11.	7-63
A2A5A3J1A1 thru A2A5A3J1A5		CONTACT, P.C. BOARD: Phosphor bronze, nickel plated; 0.70 in. long, mfr 91662, pat no. 02-005-120-6200-100; 98738, dwg 09P226643-01	7-63

Table 7-2. Radio Receiver R-1051H/URR, Parts List (Continued)

FREQUENCY STANDARD ASSEMBLY A2A5

REFERENCE DESIGNATION	NOTES	NAME AND DESCRIPTION	FIGURE NUMBER
A2A5A3MP1		OVEN CAN AND HEATER ASSEMBLY: Aluminum alloy, heater winding epoxy coated, 2.0 in. long, 1.142 in. w, 3.125 in. h; mfr 98738, part no. 01A226518-22-11.	7-63
A2A5A3MP2		PLATE, INSULATOR: Plastic; 0.50 in. sq, 0.62 in. thk; mfr 98738, pat no. 64P226533-21-11.	7-63
A2A5A3MP3 and A2A5A3MP4		GROMMET, NYLON: 0.218 in. sq, 0.268 in. long; mfr 02768, part no. 212-110302-00; 98738, dwg 05P226618-21-11.	7-63
A2A5A3MP5		CRYSTAL OVEN CAN: 3.06 in. long, 2.00 in. wide; mfr 98738, part no. 15P226548-22-11.	7-63
A2A5A3MP6		OVEN CAN STAKING ASSEMBLY: 3.375 in. long, 2.00 in. wide; mfr 98738, part no. 01A226517-22-11. (Attaching Parts) FW(1)	7-63
A2A5A3R1		RESISTOR, HEATER WIRE: Nickel chrome "C" #30 AWG; adjusted to 82 ±2 ohm, 6.75 ohm/ft. nom; mfr 98738, dwg 30P226621-21-11.	7-63
A2A5A3R2		RESISTOR, FIXED, WIRE-WOUND: 3900 ohm ±1%, 0.10 watt, 100 V max; mfr 48615, part no. SX094; 98738, dwg 17P226603-01.	7-63
A2A5A4		POWER SUPPLY ASSEMBLY: 3.180 in. long, 2.062 in. w; mfr 98738, part no. 01A228830-01.	7-64
A2A5A4C1		CAPACITOR, FIXED, CERAMIC: 0.47 uF ±10%, 100 Vdc working; MIL type M39014/02-1305.	7-64
A2A5A4C2		CAPACITOR, FIXED, CERAMIC DIELECTRIC: 1 uF ±105, 50 Vdc working; MIL type M39014/02-1407.	7-64
A2A5A4C3		CAPACITOR, FIXED, MICA: 150 pF ±5%, 500 Vdc working; MIL type CMR04F151JODL.	7-64
A2A5A4C4 thru A2A5A4C8		CAPACITOR, FIXED, CERAMIC DIELECTRIC: 1 uf ±10%, 50 Vdc working; MIL type M39014/02-1407.	7-64
A2A5A4CR1 thru A2A5A4CR6		SEMICONDUCTOR DEVICE, SILICON SWITCHING DIODE: MIL typeJAN1N4148	7-64
A2A5A4CR7		SEMICONDUCTOR DEVICE, DIODE: MIl type JAN1N4476.	7-64
A2A5A4CR8		SEMICONDUCTOR DEVICE DIODE: MIL type JAN1N4106.	7-64
A2A5A4E1		SOLDER CONNECTION ONLY.	7-64
A2A5A4E2		Not used.	
A2A5A4E3		TERMINAL, LUG: MIL type MS35431-1.	7-64AA

Table 7-2. Radio Receiver R-1051H/URR, Parts List (Continued)

FREQUENCY STANDARD ASSEMBLY A2A5

REFERENCE DESIGNATION	NOTES	NAME AND DESCRIPTION	FIGURE NUMBER
A2A5A4MP1 thru A2A5A4MP3		PAD, INSULTATOR: Nylon, 0.375 in. dia; 0.075 in. thk; mfr 13103, part no. 7717-4, 98738, dwg 14S132171-3B.	7-64
A2A5A4MP4		HEAT SINK: Aluminum alloy, anodized black; 1.297 in. long, 0.875 in. w, 0.969 in. h; mfr 98738, part no. 91P228834-01.	7-64AA
A2A5A4MP5		INSULATOR MICA: 0.98 in. long, 0.78 in. wide; mfr 02735, part no. 411-010-DF-031, dwg 14P227266-01.	7-64AA
A2A5A4MP6		SPACER, TRANSISTOR: Nylon; 1.30 in. long, 0.75 in. w; 0.063 in. thk; mfr 98738, part no. 43P226641-21-11.	7-64AA
A2A5A4Q1		TRANSISTOR: MIL type 2N2222A, 98738, dwg 48P228569-01.	7-64
A2A5A4Q2		TRANSISTOR: Item 64.	7-64
A2A5A4Q3		TRANSISTOR: MIL type JAN2N3019.	7-64
A2A5A4Q4		TRANSISTOR: Item 64.	7-64
A2A5A4Q5		TRANSISTOR: MIL type JAN2N3441. (Attaching Parts) AG(2) AS(1) (CQ(2)	7-64AA
A2A5A4R1		RESISTOR, FIXED, FILM: 75 ohm ±5%, ½ w; MIL type RLR20C75R0JR.	7-64
A2A5A4R2		RESISTOR: Item 37.	7-64
A2A5AA4R3A	1	RESISTOR, FIXED, COMPOSITION: 2000 ohm ±5%, ¼ w; MIL type RCR07G202JS.	7-64
A2A5A4R3B	1	RESISTOR, FIXED, COMPOSITION: 2400 ohm ±5%, ¼ w; MIL type RCR07G242JS.	7-64
A2A5A4R3C	1	RESISTOR: Item 47.	7-64
A2A5A4R3D	1	RESISTOR, FIXED, COMPOSITION: 3000 ohm ±5%, ¼ w; MIL type RCR07G302JS.	7-64
A2A5A4R3E	1	RESISTOR: Item 49.	7-64
A2A5A4R3F	1	RESISTOR, FIXED, COMPOSITION: 3600 ohm ±5%, ¼ w; MIL type RCR07G362JS.	7-64
A2A5A4R3G	1	RESISTOR: Item 41.	7-64
A2A5A4R3H	1	RESISTOR, FIXED, COMPOSITION: 1600 ohm ±5%, ¼ w; MIL type RCR07G162JS.	7-64
A2A5A4R3J	1	RESISTOR, FIXED, COMPOSITION: 1800 ohm ±5%, ¼ w; MIL type RCR07G182JS.	7-64
A2A5A4R3K	1	RESISTOR, FIXED, COMPOSITION: 2200 ohm ±5%, ¼ w; MIL type RCR07G222JS.	7-64
A2A5A4R4		RESISTOR: Item 38.	7-64
A2A5A4R5A	1	RESISTOR: Item 46.	7-64
A2A5A4R5B	1	RESISTOR, FIXED, COMPOSITION: 2400 ohm ±5%, ¼ w; MIL type RCR07G242JS.	7-64
A2A5A4R5C	1	RESISTOR: Item 47.	7-64

Table 7-2. Radio Receiver R-1051H/URR, Parts List (Continued)

FREQUENCY STANDARD ASSEMBLY A2A5

REFERENCE DESIGNATION	NOTES	NAME AND DESCRIPTION	FIGURE NUMBER
A2A5A4R5D	1	RESISTOR, FIXED, COMPOSITION: 3000 ohm ±5%, ¼ w; MIL type RCR07G302JS.	7-64
A2A5A4R5E	1	RESISTOR: Item 49.	7-64
A2A5A4R5F	1	RESISTOR, FIXED COMPOSITION: 3600 ohm ±5%, ¼ w; MIL type RCR07G363JS.	7-64
A2A5A4R5G	1	RESISTOR: Item 41.	7-64
A2A5A4R5H	1	RESISTOR, FIXED, COMPOSITION: 2000 ohm ±5%, ¼ w; MIL type RCR07G202JS.	7-64
A2A5A4R5J	1	RESISTOR, FIXED, COMPOSITION: 1800 ohm ±5%, ¼ w; MIL type RCR07G182JS.	7-64
A2A5A4R5K	1	RESISTOR, FIXED, COMPOSITION: 1600 ohm ±5%, ¼ w; MIL type RCR07162JS.	7-64
A2A5A4R6		RESISTOR: Item 55.	7-64
A2A5A4R7		RESISTOR: Item 47.	7-64
A2A5A4R8		RESISTOR, FIXED, COMPOSITION: 12k ohm ±5%, ¼ w; MIL type RCR07G123JS.	7-64
A2A5A4R9		RESISTOR: Item 45.	7-64
A2A5A4R10		RESISTOR: Item 55.	7-64
A2A5A4R11		RESISTOR, FIXED, WIRE-WOUND: 237 ohm ±1%, 2 w; MIL type RWR80S2370FM	7-64
A2A5A4R12		RESISTOR, FIXED, WIRE-WOUND: 2210 ohm ±1%, 2 w; MIL type RWR80S2211FR.	7-64 7-64
A2A5A4R13		RESISTOR: Item 47.	7-64
A2A5A4R14		RESISTOR: Item 55.	7-64
A2A5A4U1 and A2A5A4U2		INTEGRATED CIRCUIT: MIL type M38510/00104BCB.	7-64
A2A5A4U3		INTEGRATED CIRCUIT: Mfr 18324, part no. SG7815T/883B, 98738, dwg 48P226600-03.	7-64
A2A5A4U4		INTEGRATED CIRCUIT: Mfr 07263, part no. 78M05HMQB, 98738, dwg 48P226600-01.	7-64

Table 7-2. Radio Receiver R-1051H/URR, Parts List (Continued)

TRANSLATOR/SYNTHESIZER ASSEMBLY A2A6

REFERENCE DESIGNATION	NOTES	NAME AND DESCRIPTION	FIGURE NUMBER
A2A6		TRANSLATOR/SYNTHESIZER ASSEMBLY: 8.19 in. long, 7.40 in. w, 4.50 in. h; mfr 98738, part no. 99A228733-01 (Attaching Parts) CE(4)	7-65
A2A6C1		CAPACITOR, FIXED, ELECTROLYTIC: 820 uF ±10%, 7 Vdc working; MIL type M39018/01-0705.	7-65
A2A6C2		CAPACITOR, FIXED, CERAMIC: 1,000 pF ±10%, 200 Vdc working; MIL type M39014/01-1237.	7-65
A2A6C3		CAPACITOR, FIXED, CERAMIC: 680 pF ±10%, 200 Vdc working; MIL type M39014/01-1234.	7-65
A2A6E1 thru A2A6E4		TERMINAL: Solder only.	7-65
A2A6E5		TERMINAL, LUG: MIL type MS77068-3.	7-65
A2A6E6 and A2A6E7		TERMINAL: Solder only.	7-65
A2A6E8 and A2A6E9		Not used.	
A2A6E10		TERMINAL: Solder only.	7-65
A2A6E11		TERMINAL, LUG: 1.34 in. long, 0.7 in. w; mfr 26344, part no. 20315, 98738, dwg 29P226767-01. (Attaching Parts) F(1) U(1) BZ(1) DQ(1)	7-65
A2A6E12 and A2A6E13		TERMINAL: Solder only.	7-65
A2A6E14 and A2A6E15		Not used.	
A2A6E16 and A2A6E17		TERMINAL, LUG: MIL type MS77068-3. (Attaching Parts) A(1) BM(1)	7-65
A2A6E18 and A2A6E19		TERMINAL, LUG: Tinned copper; 1.34 in. long, 0.070 in. w, mfr 26344, part no. 20315, 98738, dwg 29P226767-01. (Attaching Parts) U(1) F(1) BZ(1) DQ(1)	7-65
A2A6FL1		FILTER, RFI: 1.057 in. long, 0.30 in. dia; MIL type M15733/24-0007.	7-65
A2A6FL2 and A2A6FL3		Not used.	
A2A6FL4		FILTER, RFI: 1.057 in. long, 0.350 in. dia; MIL type M15733/24-0007.	7-65
A2A6FL5		FILTER, ASSEMBLY: 1.06 in. long, 0.35 in. dia; mfr 98738, part no. 01A228291-02. (Attaching Parts) AL(2) AQ(2) AU(2)	7-65
A2A6MP1	2	COVER, BOTTOM: 8.030 in. long, 0.120 in. w, 0.062 in. thk aluminum alloy; mfr 98738, part no. 15P226262-21-11. (Attaching Parts) DL(6)	

Table 7-2. Radio Receiver R-1051H/URR, Parts List (Continued)

TRANSLATOR/SYNTHESIZER ASSEMBLY A2A6

REFERENCE DESIGNATION	NOTES	NAME AND DESCRIPTION	FIGURE NUMBER
A2A6MP2		COVER, SIDE: 8.178 in. long, 4.400 in. w, 0.062 in. thk; aluminum alloy; mfr 98738, part no. 15P226304-23-11. (Attaching Parts) DK(6) CQ(6) AL(6)	7-65
A2A6MP3		COVER, TOP: 8.187 in. long, 7.350 in. w, 0.062 in. thk; aluminum alloy; mfr 98738, part no. 15P226579-23-11. (Attaching Parts) CQ(13)	7-65
A2A6MP4		SPRING, WASHER, LOCK: MIL type MS36338-137.	7-65
A2A6MP5 thru A2A6MP7		Not used.	
A2A6MP8		COUPLING ASSEMBLY: Consists of A2A6MP9 thru A2A6MP11; 0.485 in. long, 0.875 in. dia; mfr 98738, part no. 01A226294-21-11. (Attaching Parts) BD(2)	7-65
A2A6MP9		COUPLING, TOP: 0.485 in. long, 0.857 in. dia; mfr 98738, part no. 58P226263-21-11.	7-65
A2A6MP10		PIN: 0.225 in. long, 0.936 in. dia; mfr 06845, part no. 4032181-0001.	7-65
A2A6MP11		SPRING, HOLD DOWN: 0.720 in. dia; 0.015 in. thk; mfr 06845, part no. 4032183-0001. (Attaching Parts) CR(2) G(2)	7-65
A2A6MP12		COUPLING ASSEMBLY: Consists of A2A6MP13 thru A2A6MP15; 0.485 in. long, 0.875 in. dia; mfr 98738, part no. 01A226294-21-11. (Attaching Parts) BD(2)	7-65
A2A6MP13		COUPLING, TOP: 0.485 in. long, 0.857 in. dia; mfr 98738, part no. 58P226263-21-11.	7-65
A2A6MP14		PIN: 0.225 in. long, 0.0936 in. dia; mfr 06845, part no. 4032181-0001.	7-65
A2A6MP15		SPRING, HOLD DOWN: 0.720 in. dia, 0.015 in. thk; mfr 06845, part no. 4032183-0001. (Attaching Parts) CR(2) G(2)	7-65
A2A6MP16		COUPLING ASSEMBLY: Consists of A2A6MP17 thru A2A6MP19; 0.485 in. long, 0.875 in. dia; mfr 98738, part no. 01A226294-21-11. (Attaching Parts) BD(2)	7-65
A2A6MP17		COUPLING, TOP: 0.485 in. long, 0.875 in. dia; mfr 98738, part no. 58P226263-21-11.	7-65
A2A6MP18		PIN: 0.225 in. long, 0.0936 in. dia; mfr 06845, part no. 4032181-0001.	7-65
A2A6MP19		SPRING, HOLD DOWN: 0.790 in. dia; 0.015 in. thk; mfr 06845, part no. 4032183-0001. (Attaching Parts) CR(2) G(2)	7-65

Table 7-2. Radio Receiver R-1051H/URR, Parts List (Continued)

TRANSLATOR/SYNTHESIZER ASSEMBLY A2A6

REFERENCE DESIGNATION	NOTES	NAME AND DESCRIPTION	FIGURE NUMBER
A2A6MP20		PAD, RUBBER: 3.0 in. long, 0.5 in. w; mfr 98738, part no. 75P226575-22-11.	7-65
A2A6MP21		INSULATOR: L-Shaped, 5.88 in. long, 1.38 in. w; mfr 98738, part no. 14P226586-21-11.	7-65
A2A6MP22		INSULATOR: 2.5 in. long, 1.75 in. w; mfr 98738, part no. 14P226580-22-11.	7-65
A2A6MP23		BRACKET ASSEMBLY, CAP., MOUNTING: Includes 1.25 in. long attached clip; mfr 98738, part no. 01A228292-01. (Attaching Parts) AL(2) AQ(2)	7-65
A2A6MP24	2	CONNECTOR AND HARNESS ASSEMBLY: Includes A2A6MP25, A2A6P1, A2A6XA9P1 thru A2A6XA14P1 and other chassis connectors; mfr 98738, part no. 01A228340-01.	7-65
A2A6MP25		PRINTED CIRCUIT, FLEXIBLE: Mfr 98738, part no. 84P228339-01.	7-65
A2A6MP26 thru A2A6MP32		INSULATOR: 6.0 in. long, 3.0 in. w; mfr 98738, part no. 14P226580-21-11.	7-65
A2A6P1		CONNECTOR, PLUG, ELECTRICAL: 2.182 in. long, 0.329 in. w, 0.494 in. thk; mfr 71785, part no. DCMM25W3PE, 98738, dwg 09P226565-21-11. (Attaching Parts) AL(2) DJ(2)	7-65
A2A6P1A1 thru A2A6P1A3		CONNECTOR, PLUG, ELECTRICAL: 0.734 in. long, right angle coaxial; mfr 71785, part no. DM53741-5001, 98738, dwg 09P226565-19.	7-65
A2A6P2		CONNECTOR, PLUG, ELECTRICAL: 1.541 in. long, 0.494 in. w, 0.422 in. dia; mfr 71785, part no. DAMM3W3P, 06845, dwg 4032484-0701. (Attaching Parts) AL(2) DJ(2)	7-65
A2A6P2A1 and A2A6P2A2		CONNECTOR, PLUG, ELECTRICAL: Right angle, coaxial, 0.734 in. long, make contact; mfr 71785, part no. 318-11-99-285, 06845, dwg 4032484-0731. Refer to A2A6A8W4, A2A6A8W5, respectively.	7-65
A2A6P3		CONNECTOR, PLUG, ELECTRICAL: 1.541 in. long, 0494 in. w, 0.422 in. dia; mfr 71785, part no. DAMM3W3P, 06845, dwg 4032484-0701. (Attaching Parts) AL(2) DJ(2)	7-65
A2A6P3A1 and A2A6P3A2		CONNECTOR, PLUG, ELECTRICAL: Right angle, coaxial, 0.734 in. long, make contact; mfr 71785, part no. 318-11-99-285, 06845, dwg 4032484-0731.	7-65
A2A6P4		CONNECTOR, TEST-POINT TYPE: MIL type M39024/12-16 (Green).	7-65
A2A6P5		CONNECTOR, TEST-POINT TYPE: MIL type M39024/12-20 (Gray).	7-65

Table 7-2. Radio Receiver R-1051H/URR, Parts List (Continued)

TRANSLATOR/SYNTHESIZER ASSEMBLY A2A6

REFERENCE DESIGNATION	NOTES	NAME AND DESCRIPTION	FIGURE NUMBER
A2A6P6		CONNECTOR, TEST-POINT TYPE: MIL type M39024/12-13 (Red).	7-65
A2A6P7		CONNECTOR, TEST-POINT TYPE: MIL type M39024/12-17 (Orange).	7-65
A2A6P8		CONNECTOR, TEST-POINT TYPE: MIL type M39024.12-19 (Yellow).	7-65
A2A6P9		CONNECTOR, TEST-POINT TYPE: MIL type M39024/12-15 (Brown).	7-65
A2A6P10		CONNECTOR, TEST-POINT TYPE: MIL type M39024/12-14 (Black).	7-65
A2A6P11		Same as A2A6P6.	7-65
A2A6P12		Same as A2A6P9.	7-65
A2A6P13		Same as A2A6P6.	7-65
A2A6R1		RESISTOR: Item 29.	7-65
A2A6R2		RESISTOR, FIXED, COMPOSITION: 10 ohm ±5%, 1/8 w; MIL type RCR05G100JS.	7-65
A2A6S1 and A2A6S2		SWITCH, ROTARY, ASSEMBLY: 2.102 in. long, 0.725 in. w, 0.812 in. dia; mfr 98738, part no. 01A226302-22-11. (Attaching Parts) DM(2) DN(2) DP(2)	7-65
A2A6S3		SWITCH, ROTARY, ASSEMBLY: 2.102 in. long, 0.725 in. w, 0.812 in. dia; mfr 98738, part no. 01A226302-23-11. (Attaching Parts) DM(1) DN(1) DP(1)	7-65
A2A6W1	2	CABLE ASSEMBLY, RF: 1.50 in. long; mfr 98738, part no. 30A226477-21-11.	7-65
A2A6W2	2	CABLE ASSEMBLY, RF: 2.37 in. long; mfr 98738, part no. 30A226477-22-11.	7-65
A2A6W3	2	CABLE ASSEMBLY, RF: 2.40 in. long; mfr 98738, part no. 30A226477-23-11.	7-65
A2A6W4 thru A2A6W9		Not used.	
A2A6W10	2	CABLE ASSEMBLY, RF: 5.75 in. long; mfr 98738, part no. 30A226477-30-11.	7-65
A2A6W11	2	CABLE ASSEMBLY, RF: 1.75 in. long; mfr 98738, part no. 30A226477-31-11.	7-65
A2A6W12	2	CABLE ASSEMBLY, RF: 2.50 in. long; mfr 98738, part no. 30A226477-32-11.	7-65
A2A6W13	2	CABLE ASSEMBLY, RF: 6.22 in. long; mfr 98738, part no. 30A226477-33-11.	7-65
A2A6W14	2	CABLE ASSEMBLY, RF: 1.87 in. long, mfr 98738, part no. 30A226477-34-11.	7-65
A2A6W15	2	CABLE ASSEMBLY, RF: 4.77 in. long; mfr 98738, part no. 30A226477-35-11.	7-65

Table 7-2. Radio Receiver R-1051H/URR, Parts List (Continued)

TRANSLATOR/SYNTHESIZER ASSEMBLY A2A6

REFERENCE DESIGNATION	NOTES	NAME AND DESCRIPTION	FIGURE NUMBER
A2A6XA1P1 thru A2A6XA11P1		Not used.	
A2A6XA12		Not used.	
A2A6XA13P1		CONNECTOR, RECEPTACLE, ELECTRICAL: 2.156 in. long, 0.308 in. w, 0.494 in. thk; mfr 71785, part no. DCMMF21WA4SE, dwg 09P226565-16. (Attaching Parts) BZ(2) F(2) G(2) DQ(2)	7-65
A2A6XA13 P1A1 thru A2A6XA13 P1A4		CONNECTOR, RECEPTACLE, ELECTRICAL: Item 26. Refer to A2A6W10, A2A6W1, A2A6W2, A2A6W3, respectively.	7-65
A2A6XA14P1		CONNECTOR, RECEPTACLE, ELECTRICAL: 1.508 in. long, 0.308 in. w, 0.494 in. thk; 71785, part no. DBMMF9W4SE, 98738, dwg 09P226565-09. (Attaching Parts) BZ(2) F(2) G(2) DQ(2)	7-65
A2A6XA14 P1A1 thru A2A6XA14 P1A3		CONNECTOR, RECEPTACLE, ELECTRICAL: Item 26. Refer to A2A6W1, A2A6S2, A2A6W3, respectively.	7-65
A2A6XA14 P1A4		CONNECTOR, PLUG, ELECTRICAL: Item 27. Refer to A2A6A8W1.	7-65, 7-67
A2A6XA15P1		Not used.	
A2A6XA16P1		CONNECTOR, RECEPTACLE, ELECTRICAL: 2.156 2.156 in. long, 0.308 in. w, 0.494 in. thk; mfr 71785, part no. DCMMF21WA4SE, 98738, dwg 09P226565-16. (Attaching Parts) BZ(2) F(2) (G)2 DQ(2)	7-65
A2A6XA16 P1A1 thru A2A6XA16 P1A4		CONNECTOR, RECEPTACLE, ELECTRICAL: Item 26. Refer to A2A6W15, A2A6W10, A2A6W13 and A2A6W14, respectively.	7-65
A2A6XA17P1		CONNECTOR, RECEPTACLE, ELECTRICAL: 1.508 in. long, 0.308 in. w, 0.494 in. thk; mfr 71785, part no. DBMMF17W2SE, 98738, dwg 09P226565-08. (Attaching Parts) BZ(2) F(2) G(10 DQ(2)	7-65
A2A6XA17 P1A1		CONNECTOR, RECEPTACLE, ELECTRICAL: Item 26. Refer to A2A6W14.	7-65
A2A6XA17 P1A2		CONNECTOR, RECEPTACLE, ELECTRICAL: Item 21.	7-65
A2A6XA18		Not used.	

Table 7-2. Radio Receiver R-1051H/URR, Parts List (Continued)

TRANSLATOR/SYNTHESIZER ASSEMBLY A2A6

REFERENCE DESIGNATION	NOTES	NAME AND DESCRIPTION	FIGURE NUMBER
A2A6XA19P1		CONNECTOR, RECEPTACLE, ELECTRICAL: in. long, 0.308 in. w, 0.494 in. thk; 71785, part no. DBMF9W4SE-A156, 98738, dwg 09P226565-09. (Attaching Parts) BZ(2) F(2) G(2) DQ(2)	7-65
A2A6XA19 P1A1 thru A2A6XA19 P1A3		CONNECTOR, RECEPTACLE, ELECTRICAL: Item 26. Refer to A2A6W13, A2A6W12, A2A6W11, respectively.	7-65
A2A6XA19 P1A4		CONNECTOR, PLUG, ELECTRICAL: Item 27. Refer to A2A6A8W2.	7-65
A2A6XA20P1		CONNECTOR, RECEPTACLE, ELECTRICAL: in. long, 0.308 in. w, 0.494 in. thk; mfr 71785, part no. DBMMF17W2SE, 98738, dwg 09P226565-08. (Attaching Parts) BZ(2) F(2) G(1) DQ(2)	7-65
A2A6XA20 P1A1 and A2A6XA20 P1A2		CONNECTOR, RECEPTACLE, ELECTRICAL: Item 26. Refer to A2A6W12, A2A6W11, respectively.	7-65
A2A6A1 thru A2A6A6		Not used.	
A2A6A7		FILTER ASSEMBLY: 4.50 in. long, 1.750 in. w, mfr 98738, part no. 01A226681-21-11. (Attaching Parts) DL(2)	7-66
A2A6A7C1 and A2A6A7C2		CAPACITOR, FIXED, ELECTROLYTIC: 390 uF, -10 to +30%, 30 Vdc working; MIL type M39018/ 01-0630.	7-66
A2A6A7E1 thru A2A6A7E11		Not used.	
A2A6A7E12 and A2A6A7E13		TERMINAL, STUD: Item 62. (Attaching Parts) V(1)	7-66
A2A6A7E14 and A2A6A7E15		TERMINAL, STUD: Item 63. (Attaching Parts) V(1)	7-66
A2A6A7MP1		BRACKET ASSEMBLY, FILTER: 4.50 in. long, 1,812 in. w; mfr 98738, part no. 01A226680-21-11.	7-66
A2A6A7MP2 and A2A6A7MP3		MOUNTING BRACKET: MIL type M24066/2/122.	
A2A6A7R1 and A2A6A7R2		Not used.	

Table 7-2. Radio Receiver R-1051H/URR, Parts List (Continued)

TRANSLATOR/SYNTHESIZER ASSEMBLY A2A6

REFERENCE DESIGNATION	NOTES	NAME AND DESCRIPTION	FIGURE NUMBER
A2A6A7R3 and A2A6A7R4		RESISTOR, FIXED, COMPOSITION: 3 ohm, ±5%, 1 w, MIL type RCR32G3R0JS.	7-66
A2A6A8		RF TRANSLATOR ASSEMBLY: 8.03 in. long, 4.125 in. w; mfr 98738, part no. 01A227277-03. (Attaching Parts) AL(6) AQ(6) DK(6)	7-65
A2A6A8C1		CAPACITOR: Item 19.	7-67
A2A6A8C2		CAPACITOR, FIXED, MICA: 820 pF ±2%, 500 Vdc working; MIL type CMR06F821GPDM.	7-67
A2A6A8C3 and A2A6A8C4		CAPACITOR: Item 19.	
A2A6A8C5		CAPACITOR: Item 12.	7-67
A2A6A8C6 thru A2A6A8C11		CAPACITOR: Item 19.	7-67
A2A6A8C12		CAPACITOR, FIXED, MICA: 1000 pF ±2%, 500 Vdc working; MIL type CMR06F102GPDM.	7-67
A2A6A8C13 thru A2A6A8C15		CAPACITOR: Item 19.	7-67
A2A6A8C16		CAPACITOR, FIXED, CERAMIC: 22 pF ±10%, 200 Vdc working; MIL type M39014/01-1207.	7-67
A2A6A8C17		CAPACITOR: Item 19.	7-67
A2A6A8C18		CAPACITOR: Item 17.	7-67
A2A6A8C19		CAPACITOR: Item 19.	7-67
A2A6A8C20		CAPACITOR: Item 17.	7-67
A2A6A8C21 thru A2A6A8C23		CAPACITOR: Item 19.	7-67
A2A6A8C24 and A2A6A8C25		CAPACITOR: Item 17.	7-67
A2A6A8C26 and A2A6A8C27		CAPACITOR: Item 19.	7-67
A2A6A8C28		CAPACITOR: Item 12.	7-67
A2A6A8C29		CAPACITOR: Item 19.	7-67
A2A6A8C30		CAPACITOR, FIXED, CERAMIC: 22 pF ±10%, 200 Vdc working; MIL type M39014/01-1207.	7-67
A2A6A8C31 thru A2A6A8C33		CAPACITOR: Item 19.	7-67
A2A6A8C34		CAPACITOR: Item 17.	7-67

Table 7-2. Radio Receiver R-1051H/URR, Parts List (Continued)

TRANSLATOR/SYNTHESIZER ASSEMBLY A2A6

REFERENCE DESIGNATION	NOTES	NAME AND DESCRIPTION	FIGURE NUMBER
A2A6A8C35 and A2A6A8C36		CAPACITOR: Item 19.	7-67
A2A6A8C37 and A2A6A8C38		CAPACITOR: Item 17.	7-67
A2A6A8C39		CAPACITOR: Item 19.	7-67
A2A6A8C40 and A2A6A8C41		CAPACITOR: Item 17.	7-67
A2A6A8C42 and A2A6A8C43		CAPACITOR: Item 19.	7-67
A2A6A8C44 and A2A6A8C45		CAPACITOR: Itewm 17.	7-67
A2A6A8C46 and A2A6A8C47		CAPACITOR: Item 19.	7-67
A2A6A8C48		CAPACITOR: Item 17.	7-67
A2A6A8C49 and A2A6A8C50		CAPACITOR: Item 19.	7-67
A2A6A8C51		CAPACITOR: Item 17.	7-67
A2A6A8C52 and A2A6A8C53		CAPACITOR: Item 19.	7-67
A2A6A9C54		CAPACITOR, FIXED, CERAMIC: 22 pF ±10%, 200 Vdc working; MIL type M39014/01-1207.	7-67
A2A6A8C55		CAPACITOR: Item 19.	7-67
A2A6A8C56 thru A2A6A8C58		CAPACITOR: Item 17.	7-67
A2A6A8C59		CAPACITOR, FIXED, CERAMIC: 270 pF ±2%, 500 Vdc working; MIL type CMR05F271GPDM.	7-67
A2A6A8C60 thru A2A6A8C62		CAPACITOR: Item 19.	
A2A6A8C63		CAPACITOR: Item 17.	7-67
A2A6A8C64 and A2A6A8C65		CAPACITOR: Item 19.	7-67
A2A6A8C66		CAPACITOR, FIXED, CERAMIC: 1000 pF ±20%, 200 Vdc working; MIL type M39014/01-1237.	7-67
A2A6A8CR1		SEMICONDUCTOR DEVICE, DIODE: MIL type JAN1N3020B.	7-67

Table 7-2. Radio Receiver R-1051H/URR, Parts List (Continued)

TRANSLATOR/SYNTHESIZER ASSEMBLY A2A6

REFERENCE DESIGNATION	NOTES	NAME AND DESCRIPTION	FIGURE NUMBER
A2A6A8CR2 thru A2A6A8CR20		SEMICONDUCTOR DEVICE, DIODE: Item 60.	7-67
A2A6A8E1 thru A2A6A8E15		TERMINAL: Solder only.	7-67
A2A6A8E16 thru A2A6A8E21		TERMINAL, STUD (NON-INSULATED): MIL type SE12XC01.	7-67
A2A6A8FL1		FILTER, BANDPASS, 20 MHz; 2.50 in. long, 1 in. w, mfr 81815, part no. A551, dwg 80P228422-01 is preferred; 4031908-0701 is alternate. (Attaching Parts) AL(2) AG(2)	7-67
A2A6A8FL2		FILTER, BANDPASS, 30 MHz, 2.50 in. long, 1 in. w, mfr 81815, part no. A597, dwg 08P228421-01 is preferred; 4031909-0701 is alternate. (Attaching Parts) AL(2) AG(2)	7-67
A2A6A8FL3		FILTER, BANDPASS, 2.85 MHz: 2.50 in. long, 1 in. w, mfr 81815, part no. A531, dwg 08P228423-01 is preferred, 4031907-0701 is alternate. (Attaching Parts) AL(2) AG(2)	7-67
A2A6A8J1 thru A2A6A8J3		Not used.	
A2A6A8J4* thru A2A6A8J7*		CONTACT, ELECTRICAL: Brass, acid plated; 0.070 in. OD; mfr 71279, part no. 460-2976-02, 06845, dwg 39P228840-01.	7-67
A2A6A8L1		COIL, RF: 1 mH; MIL type MS75089-23.	7-67
A2A6A8L2		COIL, RF: 22 uH; MIL type MS75089-3.	7-67
A2A6A8L3		COIL, RF: 47 uH; MIL type MS75089-7.	7-67
A2A6A8L4 and A2A6A8L5		COIL, RF: 1 mH; MIL type MS75089-23.	7-67
A2A6A8L6 and A2A6A8L7		COIL, RF: 47 uH; MIL type MS75089-7.	7-67
A2A6A8L8		COIL, RF: 22 uH; MIL type MS75089-3.	7-67
A2A6A8L9		COIL, RF: 12 uH; MIL type MS14046-5.	7-67
A2A6A8L10		COIL, RF: 47 uH; MIL type MS75089-7.	7-67
A2A6A8L11		COIL, RF: 12 uH; MIL type MS75089-5.	7-67
A2A6A8L12		COIL, RF: 1 mH; MIL type MS75089-23.	7-67
A2A6A8L13		COIL, RF: 22 uH; MIL type MS75089-3.	7-67
		* The electrical contacts which plug onto J4 - J7 are not shown on figure 7-67. See A2A6MP24.	

Table 7-2. Radio Receiver R-1051H/URR, Parts List (Continued)

TRANSLATOR/SYNTHESIZER ASSEMBLY A2A6

REFERENCE DESIGNATION	NOTES	NAME AND DESCRIPTION	FIGURE NUMBER
A2A6A8L14		COIL, RF: VARIABLE: 0.22 uH; ±10%, mfr 09021, part no. VCMR22V, 98738, part no. 24P228449-01	7-67
A2A6A8L15		COIL, RF: 22 uH; MIL type MS75084-16.	7-67
A2A6A8Q1		TRANSISTOR: Item 64.	7-67
A2A6A8R1		RESISTOR: Item 40.	7-67
A2A6A8R2		RESISTOR: Item 54.	7-67
A2A6A8R3		RESISTOR: Item 37.	7-67
A2A6A8R4		RESISTOR, FIXED, COMPOSITION: 1200 ohm ±5%, 1/4 w; MIL type RCR07G122JS.	7-67
A2A6A8R5		RESISTOR, FIXED, COMPOSITION: 82 ohm ±5%, 1/4 w; MIL type RCR07G820JS.	7-67
A2A6A8R6		RESISTOR: Item 45.	7-67
A2A6A8R7		RESISTOR: Item 38.	7-67
A2A6A8R8 and A2A6A8R9		RESISTOR: Item 39.	7-67
A2A6A8R10		RESISTOR: Item 45.	7-67
A2A6A8R11		RESISTOR, FIXED, COMPOSITION: 82 ohm ±5%, 1/4 w; MIL type RCR07G820JS.	7-67
A2A6A8R12		RESISTOR: Item 45.	7-67
A2A6A8R13		RESISTOR, FIXED, COMPOSITION: 270 ohm ±5%, 1/4 w; MIL type RCR07G820JS.	7-67
A2A6A8R14		RESISTOR, FIXED, COMPOSITION: 300 ohm ±5%, 1/4 w; MIL type RCR07G301JS.	7-67
A2A6A8R15 thru A2A6A8R17		RESISTOR: Item 46.	7-67
A2A6A8R18		RESISTOR: Item 45.	7-67
A2A6A8R19		RESISTOR: Item 46.	7-67
A2A6A8R20 thru A2A6A8R22		RESISTOR: Item 45.	7-67
A2A6A8R23 thru A2A6A8R26		RESISTOR: Item 46.	7-67
A2A6A8R27		RESISTOR: Item 41.	7-67
A2A6A8R28 and A2A6A8R29		RESISTOR, FIXED, COMPOSITION: 300 ohm ±5%, 1/4 w; MIL type RCR07G301JS.	7-67
A2A6A8R30		RESISTOR: Item 45.	7-67
A2A6A8R31		RESISTOR, FIXED, COMPOSITION: 82 ohm ±5%, 1/4 w; MIL type RCR07G820JS.	7-67
A2A6A8R32		RESISTOR: Item 45.	7-67
A2A6A8R33		RESISTOR: Item 37.	7-67

Table 7-2. Radio Receiver R-1051H/URR, Parts List (Continued)

TRANSLATOR/SYNTHESIZER ASSEMBLY A2A6

REFERENCE DESIGNATION	NOTES	NAME AND DESCRIPTION	FIGURE NUMBER
A2A6A8R34 and A2A6A8R35		RESISTOR: Item 41.	7-67
A2A6A8R36		RESISTOR, VARIABLE: 1000 ohm ±3%, 1/4 w; MIL type RJR26FW102M.	7-67
A2A6A8R37 and A2A6A8R38		RESISTOR: Item 41.	7-67
A2A6A8R39		RESISTOR: Item 45.	7-67
A2A6A8R40		RESISTOR: Item 41.	7-67
A2A6A8R41		RESISTOR: Item 45.	7-67
A2A6A8R42 and A2A6A8R43		RESISTOR: Item 46.	7-67
A2A6A8R44		RESISTOR: Item 41.	7-67
A2A6A8R45 and A2A6A8R46		RESISTOR: Item 46.	7-67
A2A6A8R47 and A2A6A8R48		RESISTOR, FIXED, COMPOSITION: 300 ohm ±5%, 1/4 w; MIL type RCR07G301JS.	7-67
A2A6A8R49		RESISTOR: Item 41.	7-67
A2A6A8R50		RESISTOR, FIXED, COMPOSITION: 82 ohm ±5%, 1/4 w; MIL type RCR07G820JS.	7-67
A2A6A8R51		RESISTOR: Item 37.	7-67
A2A6A8R52		RESISTOR, VARIABLE: 100 ohm ±3%, 1/4 w; MIL type RJR26FW101M.	7-67
A2A6A8R53 and A2A6A8R54		RESISTOR: Item 45.	7-67
A2A6A8R55		RESISTOR: Item 37.	7-67
A2A6A8R56 thru A2A6A8R58		RESISTOR, FIXED, COMPOSITION: 75 ohm ±5%, 1/4 w; MIL type RCR07G750JS.	7-67
A2A6A8R59		RESISTOR, FIXED, COMPOSITION: 8200 ohm ±5%, 1/4 w; MIL type RCR07G822JS.	7-67
A2A6A8R60		RESISTOR, FIXED, COMPOSITION: 3900 ohm ±5%, 1/4 w; MIL type RCR07G392JS.	7-67
A2A6A8R61		RESISTOR, FIXED, COMPOSITION: 5600 ohm ±5%, 1/4 w; MIL type RCR07G562JS.	7-67
A2A6A8R62		RESISTOR: Item 38.	7-67
A2A6A8R63		RESISTOR, FIXED, COMPOSITION: 8200 ohm ±5%, 1/4 w; MIL type RCR07G822JS.	7-67
A2A6A8R64		RESISTOR, FIXED, COMPOSITION: 3900 ohm ±5%, 1/4 w; MIL type RCR07G392JS.	7-67
A2A6A8R65		RESISTOR, FIXED, COMPOSITION: 5600 ohm ±5%, 1/4 w; MIL type RCR07G562JS.	7-67

Table 7-2. Radio Receiver R-1051H/URR, Parts List (Continued)

TRANSLATOR/SYNTHESIZER ASSEMBLY A2A6

REFERENCE DESIGNATION	NOTES	NAME AND DESCRIPTION	FIGURE NUMBER
A2A6A8R66		RESISTOR: Item 38.	7-67
A2A6A8R67		RESISTOR, FIXED, COMPOSITION: 8200 ohm ±5%, 1/4 w; MIL type RCR07G822JS.	7-67
A2A6A8R68		RESISTOR, FIXED, COMPOSITION: 3900 ohm ±5%, 1/4 w; MIL type RCR07G392JS.	7-67
A2A6A8R69		RESISTOR, FIXED, COMPOSITION: 5600 ohm ±5%, 1/4 w; MIL type RCR07G562JS.	7-67
A2A6A8R70		RESISTOR, FIXED, COMPOSITION: 1500 ohm ±5%, 1/4 w; MIL type RCR07G152JS.	7-67
A2A6A8RT1 thru A2A6A8RT3		THERMISTOR: Negative coefficient, 200 ohm, ±10%, at 25 deg. C., 1/2 w; mfr 15801, part no. KB22J1, 98738, dwg 06P226775-01.	7-67
A2A6A8T1		TRANSFORMER, RF: 0.490 in. long, 0.422 in. dia; mfr 03765, part no. AC8345, 98738, dwg 24P226469-01.	7-67
A2A6A8T2 and A2A6A8T3		TRANSFORMER, RF: 0.5 in. long, 0.375 in. w, 0.375 in. h; mfr 06978, part no. 70-122-02, 98738, dwg 24P226473-01 is preferred, 24P228306-01 is alternate.	7-67
A2A6A8T4 thru A2A6A8T7		TRANSFORMER, RF: 0.525 in. long, 0.525 in. w, 0.280 in. h; mfr 14482, part no. BT8, 98738, dwg 24P226471-01.	7-67
A2A6A8TP1 thru A2A6A8TP4		Not used.	
A2A6A8TP5		CONNECTOR, ELECTRICAL, TEST-POINT TYPE: 1500 Vrms, 60 Hz; MIL type M39024/11-05.	7-67
A2A6A8TP6		CONNECTOR, ELECTRICAL, TEST-POINT TYPE: 1500 Vrms, 60 Hz; MIL type M39024/11-07.	7-67
A2A6A8TP7		CONNECTOR, ELECTRICAL, TEST-POINT TYPE: 1500 Vrms, 60 Hz; MIL type M39024/11-10.	7-67 7-67
A2A6A8TP8		CONNECTOR, ELECTRICAL, TEST-POINT TYPE: 1500 Vrms, 60 Hz; MIL type M39024/11-09.	7-67
A2A6A8U1 and A2A6A8U2		INTEGRATED CIRCUIT: Mfr 54590, part no. CA3049T/3, 98738, dwg 48P228318-02.	7-67
A2A6A8U3		INTEGRATED CIRCUIT: Mfr 54590, part no. CA3049T/3, 98738, dwg 48P228318-01.	7-67
A2A6A8W1		CABLE ASSEMBLY, RF: 11.25 in. long; mfr 98738, part no. 30A226482-21-11.	7-67
A2A6A8W2		CABLE ASSEMBLY, RF: 7.12 in. long; mfr 98738, part no. 30A226482-22-11.	7-67
A2A6A8W3		CABLE ASSEMBLY, RF: 5.00 in. long; mfr 98738, part no. 30A228007-01.	7-67
A2A6A8W4		CABLE ASSEMBLY, RF: 6.00 in. long; mfr 98738, part no. 30A226482-24-11.	7-67

Table 7-2. Radio Receiver R-1051H/URR, Parts List (Continued)

TRANSLATOR/SYNTHESIZER ASSEMBLY A2A6

REFERENCE DESIGNATION	NOTES	NAME AND DESCRIPTION	FIGURE NUMBER
A2A6A8W5		CABLE ASSEMBLY, RF: 6.00 in. long; mfr 98738, part no. 30A226482-25-11.	7-67
A2A6A8W6		CABLE ASSEMBLY, RF: 5.75 in. long; mfr 98738, part no. 30A226482-26-11.	7-67
A2A6A8W7		CABLE ASSEMBLY, RF: 5.75 in. long; mfr 98738, part no. 30A226482-27-11.	7-67
A2A6A9 thru A2A6A12		Not used.	
A2A6A13		CIRCUIT CARD ASSEMBLY, 10 MHz/1 MHz: 5.75 in. long, 3.0 in. w, mfr 98738, part no. 01A228713-01.	7-68
A2A6A13C1		CAPACITOR: Item 11.	7-68
A2A6A13C2		CAPACITOR: Item 19.	7-68
A2A6A13C3		CAPACITOR, FIXED (NON-SOLID ELECTROLYTIC), TANTALUM: 10 uF, ±10%, 50V; MIL type M39006/09-8318.	7-68
A2A6A13C4		CAPACITOR: Item 19.	7-68
A2A6A13C5		CAPACITOR, FIXED, ELECTROLYTIC (SOLID ELECTROLYTE), TANTALUM: 56 uF, ±10%, 6 Vdc working; MIL type M39003/1-2246.	7-68
A2A6A13C6		CAPACITOR: Item 19.	7-68
A2A6A13C7 thru A2A6A13C18		CAPACITOR: Item 15.	7-68
A2A6A13C19		CAPACITOR, FIXED, ELECTROLYTIC (SOLID ELECTROLYTE), TANTALUM: 100 uF ±10%, 10 Vdc working; MIL type M39003/1-2261.	7-68
A2A6A13C20		CAPACITOR, FIXED, CERAMIC: 47 pF ±10%, 200 Vdc working; MIL type M39014/01-1213.	7-68
A2A6A13CR1 thru A2A6A13CR5		Not used	
A2A6A13CR6		SEMICONDUCTOR DEVICE, DIODE: Silicon, voltage regulator; MIL type JAN1N964B.	7-68
A2A6A13CR7		SEMICONDUCTOR DEVICE, DIODE: Mfr 26629, part no. H35-4126, 98738, dwg no. 48P226450-02.	
A2A6A13CR8 and A2A6A13CR9		SEMICONDUCTOR DEVICE, DIODE: MIL type JAN1N914.	7-68
A2A6A13L1		COIL, RF: 0.33 uH; MIL type MS75087-7.	7-68
A2A6A13L2		Not used.	

Table 7-2. Radio Receiver R-1051H/URR, Parts List (Continued)

TRANSLATOR/SYNTHESIZER ASSEMBLY A2A6

REFERENCE DESIGNATION	NOTES	NAME AND DESCRIPTION	FIGURE NUMBER
A2A6A13L3		INDUCTOR ASSEMBLY; 0.465 mH, mfr 98738, part no. 24A226360-24-11.	7-68
A2A6A13L4 thru A2A6A13L8		COIL, RF: 470 uH; MIL type MS75085-15.	7-68
A2A6A13L9		COIL, RF: 8.2 uH: MIL type MS75084-11.	
A2A6A13MP1 and A2A6A13MP2		EJECTOR, CIRCUIT CARD: Item 28.	7-68
A2A6A13MP3		ANGLE: 1.3 in. long, 0.12 in. thk mfr 98738, part no. 07P228889-01.	7-68
A2A6A13MP4		SPRING, STRIP: 1.08 in. long, 0.50 in. w; mfr 98738, part no. 41P228725-01.	7-68
A2A6A13Q1		TRANSISTOR: Item 64.	7-68
A2A6A13R1		RESISTOR: Item 38.	7-68
A2A6A13R2 thru A2A6A13R6		RESISTOR: Item 39.	7-68
A2A6A13R7		Not used.	
A2A6A13R8		RESISTOR, FIXED, COMPOSITION: 180 ohm ±5%, 1/4 w; MIL type RCR07G181JS.	7-68
A2A6A13R9 and A2A6A13R10		RESISTOR, FIXED, COMPOSITION: 9100 ohm ±5%, 1/4 w; MIL type RCR07G912JS.	7-68
A2A6A13R11		RESISTOR, FIXED, COMPOSITION: 1 megohm ±5%, 1/4 w; MIL type RCR07G105JS.	7-68
A2A6A13R12		Not used.	
A2A6A13R13		RESISTOR, FIXED, COMPOSITION: 510 ohm ±5%, 1/4 w; MIL type RCR07G511JS.	7-68
A2A6A13R14 thru A2A6A13R18		RESISTOR: Item 37.	7-68
A2A6A13R19		RESISTOR: Item 36.	7-68
A2A6A13R20		RESISTOR, FIXED, COMPOSITION: 9100 ohm ±5%, 1/4 w; MIL type RCR07G912JS.	7-68
A2A6A13R21		RESISTOR, FIXED, COMPOSITION: 1800 ohm ±5%, 1/4 w; MIL type RCR07G182JS.	7-68
A2A6A13R22 thru A2A6A13R26		Not used.	
A2A6A13R27		RESISTOR, FIXED, COMPOSITION: 2000 ohm ±5%, 1/4 w; MIL type RCR07G202JS.	7-68
A2A6A13TP1		CONNECTOR, ELECTRICAL, TEST-POINT TYPE: Item 21.	7-68
A2A6A13TP2		CONNECTOR, ELECTRICAL, TEST-POINT TYPE: Item 22.	7-68

Table 7-2. Radio Receiver R-1051H/URR, Parts List (Continued)

TRANSLATOR/SYNTHESIZER ASSEMBLY A2A6

REFERENCE DESIGNATION	NOTES	NAME AND DESCRIPTION	FIGURE NUMBER
A2A6A13TP3		CONNECTOR, ELECTRICAL, TEST-POINT TYPE: Item 23.	7-68
A2A6A13U1		INTEGRATED CIRCUIT: Mfr 01295, part no. 4344DCBS, 98738, dwg 48P226446-01.	7-68
A2A6A13U2		INTEGRATED CIRCUIT: Mfr 02735, part no. CA3140, 98738, dwg 48P226682-01.	7-68
A2A6A13U3		INTEGRATED CIRCUIT: Mfr 04713, part no. MC1648, 98738, dwg 48P228371-01.	7-68
A2A6A13U4		INTEGRATED CIRCUIT: Mfr 01295, part no. 54S02, 98738, dwg 48P226451-01.	7-68
A2A6A13U5		INTEGRATED CIRCUIT: Mfr 07263, part no. 54F191, 98738, dwg 48P228739-01.	7-68
A2A6A13U6		INTEGRATED CIRCUIT: Mfr 01295, part no. 54S02, 98738, dwg 48P226451-01.	7-68
A2A6A13U7 and A2A6A13U8		INTEGRATED CIRCUIT: Mfr 01295, part no. 54S168, 98738, dwg 48P228737-01.	7-68
A2A6A13U9		INTEGRATED CIRCUIT: Mfr 18324, part no. 82S123F/883B, 98738, dwg 48P228882-01.	7-68
A2A6A13W1		ASSEMBLY, COAXIAL: 3.00 in. long; mfr 98738, dwg 30A228383-01.	7-68
A2A6A13A1		FILTER ASSEMBLY, TRANSLATOR/SYNTHESIZER: Mfr 98738, part no. 01A226751-22-11. (Attaching Parts) AG(2) AL(2) CQ(2) DS(2)	7-68
A2A6A13A1 CR1 thru A2A6A13A1 CR5		SEMICONDUCTOR DEVICE, DIODE: MIL type JAN1N3611.	7-68
A2A6A13A1 FL1 thru A2A6A13A1 FL5		FILTER RFI: 1 uF min. capacitance, 50 Vdc working; 0.858 in. long, 0.203 in. dia; mfr 33095, part no. SC1105M, 98738, dwg 21P226694-01.	7-68
A2A6A13A1 MP1		BRACKET, FILTER MOUNTING: Brass, 2.63 in. long, 0.81 in. w, 0.43 in. thk; mfr 98738, part no. 07P226691-23-11.	7-68
A2A6A13A1 MP2 and A2A6A13A1 MP3		STRAP, GROUND: Brass, 0.75 in. long, 0.187 in. w, mfr 98738, part no. 07P226695-21-11.	7-68
A2A6A13A1P1		CONNECTOR, PLUG, ELECTRICAL: 2.729 in. long, 0.494 in. w; mfr 25330, part no. GCM53514-1287, 98738, dwg 09P226666-03.	7-68
A2A6A13A1 P1A1 thru A2A6A13A1 P1A4		PLUG, CONNECTOR: 0.929 in. long, mfr 71785, part no. DM53740-5001, 98738, dwg 09P226565-17	7-68

Table 7-2. Radio Receiver R-1051H/URR, Parts List (Continued)

TRANSLATOR/SYNTHESIZER ASSEMBLY A2A6

REFERENCE DESIGNATION	NOTES	NAME AND DESCRIPTION	FIGURE NUMBER
A2A6A13A1W1		ASSEMBLY, COAXIAL: 2.00 in. long; mfr 98738 dwg 30A228383-09.	7-68
A2A6A13A1W2		ASSEMBLY, COAXIAL: 3.62 in. long; mfr 98738 dwg 30A228383-25.	7-68
A2A6A13A1W3		ASSEMBLY, COAXIAL: 2.75 in. long; mfr 98738 dwg 30A228383-14.	7-68
A2A6A13A1W4		ASSEMBLY, COAXIAL: 2.25 in. long; mfr 98738, dwg 30A228383-24.	7-68
A2A6A14		CIRCUIT CARD ASSEMBLY, FILTER 10 MHz/ 1/ MHz: 5.75 in. long, 3.0 in. w; mfr 98738, part no. 01A226073-21-11.	7-69
A2A6A14C1 and A2A6A14C2		CAPACITOR: Item 19.	7-69
A2A6A14C3		CAPACITOR, FIXED, MICA: 200 pF ±2%, 500 Vdc working; MIL type CMR04F201GPDM.	7-69
A2A6A14C4		CAPACITOR: Item 19.	7-69
A2A6A14C5		CAPACITOR, FIXED, MICA: 330 pF ±2%, 100 Vdc working; MIL type CMR04F331GPAM.	7-69
A2A6A14C6		CAPACITOR, FIXED, MICA: 200 pF ±2%, 500 Vdc working; MIL type CMR04F201GPDM.	7-69
A2A6A14C7 thru A2A6A14C9		CAPACITOR: Item 19.	7-69
A2A6A14C10 and A2A6A14C11		CAPACITOR: Item 15.	7-69
A2A6A14C12		CAPACITOR, FIXED, MICA: 180 pF ±2%, 500 Vdc working; MIL type CMR04F181GPDM.	7-69
A2A6A14C13		CAPACITOR: Item 15.	7-69
A2A6A14C14		CAPACITOR, FIXED, MICA: 300 pF ±2%, 300 Vdc working; MIL type CMR04F301GPCM.	7-69
A2A6A14C15		CAPACITOR, FIXED, MICA: 180 pF ±2%, 500 Vdc working; MIL type CMR04F181GPDM.	7-69
A2A6A14C16 thru A2A6A14C20		CAPACITOR: Item 15.	7-69
A2A6A14C21		CAPACITOR, FIXED, MICA: 56 pF ±2%, 500 Vdc working; MIL type CMR04E560GPDM.	7-69
A2A6A14C22		CAPACITOR: Item 15.	7-69
A2A6A14C23		CAPACITOR, FIXED, MICA: 91 pF ±2%, 500 Vdc working; MIL type CMR04F910GPDM.	7-69
A2A6A14C24		CAPACITOR, FIXED, MICA: 56 pF ±2%, 500 Vdc working; MIL type CMR04E560GPDM.	7-69

Table 7-2. Radio Receiver R-1051H/URR, Parts List (Continued)

TRANSLATOR/SYNTHESIZER ASSEMBLY A2A6

REFERENCE DESIGNATION	NOTES	NAME AND DESCRIPTION	FIGURE NUMBER
A2A6A14C25 thru A2A6A14C27		CAPACITOR: Item 15.	7-69
A2A6A14C28		CAPACITOR: Item 11.	7-69
A2A6A14C29		CAPACITOR: Item 19.	7-69
A2A6A14L1		COIL, RF: 22 uH; MIL type MS75084-16.	7-69
A2A6A14L2		COIL, RF: 8.2 uH; MIL type MS75084-11.	7-69
A2A5A14L3		COIL, RF: 22 uH; MIL type MS75084-16.	7-69
A2A6A14L4		COIL, RF: 8.2 uH; MIL type MS75084-11.	7-69
A2A6A14L5		COIL, RF: 22 uH; MIL type MS75084-16.	7-69
A2A6A14L6		COIL, RF: 1 uH; MIL type MS75083-13.	7-69
A2A6A14L7		COIL, RF: 2.7 uH; MIL type MS75084-5.	7-69
A2A6A14L8		COIL, RF: 1.8 uH; MIL type MS75084-3.	7-69
A2A6A14L9		COIL, RF: 2.7 uH; MIL type MS75084-5.	7-69
A2A6A14L10		COIL, RF: 1.8 uH; MIL type MS75084-3.	7-69
A2A6A14L11		COIL, RF: 2.7 uH; MIL type MS75084-5.	7-69
A2A6A14L12		COIL, RF: 1 uH; MIL type MS75083-13.	7-69
A2A6A14L13		COIL, RF: 2.2 uH; MIL type MS75084-4.	7-69
A2A6A14L14		COIL, RF: 1.8 uH; MIL type MS75084-3.	7-69
A2A6A14L15		COIL, RF: 2.2 uH; MIL type MS75084-4.	7-69
A2A6A14L16		COIL, RF: 1.8 uH; MIL type MS75084-3.	7-69
A2A6A14L17		COIL, RF: 2.2 uH; MIL type MS75084-4.	7-69
A2A6A14L18		COIL, RF: 1 uH; MIL type MS75083-13.	7-69
A2A6A14L19		COIL, RF: 27 uH; MIL type MS75089-4.	7-69
A2A6A14MP1 and A2A6A14MP2		EJECTOR, CIRCUIT CARD: Item 28.	7-69
A2A6A14MP3 thru A2A6A14MP5		PAD, TRANSISTOR MOUNTING: Mfr 13103, part no. 7717-114DAP; 98738, dwg 14S132171-44A-9.	7-69
A2A6A14P1		CONNECTOR, RECEPTACLE, ELECTRICAL: 1.534 in. long, 0.329 in. w, 0.494 in. thk; mfr 26330, part no. GBM53513-1364, 98738, dwg 09P226666-02. (Attaching Parts) AG(2) AL(2) CQ(2) DS(2)	7-69
A2A6A14P1 A1 thru A2A6A14P1 A4		PLUG, CONNECTOR: 0.929 in. long, mfr. 71785, part no. DM53740-5001, 98738, dwg 09P226565-17.	7-69
A2A6A14Q1		TRANSISTOR: Item 65.	7-69
A2A6A14Q2 and A2A6A14Q3		TRANSISTOR: Item 64.	7-69
A2A6A14Q4		TRANSISTOR: Item 65.	7-69

Table 7-2. Radio Receiver R-1051H/URR, Parts List (Continued)

TRANSLATOR/SYNTHESIZER ASSEMBLY A2A6

REFERENCE DESIGNATION	NOTES	NAME AND DESCRIPTION	FIGURE NUMBER
A2A6A14Q5 and A2A6A14Q6		TRANSISTOR: Item 64.	7-69
A2A6A14Q7		TRANSISTOR: Item 65.	7-69
A2A6A14Q8 and A2A6A14Q9		TRANSISTOR: Item 64.	7-69
A2A6A14R1		RESISTOR, FIXED, COMPOSITION: 820 ohm ±5%, 1/8 w; MIL type RCR05G821JS.	7-69
A2A6A14R2		RESISTOR: Item 30.	7-69
A2A6A14R3		RESISTOR: Item 32.	7-69
A2A6A14R4		RESISTOR, FIXED, COMPOSITION: 240 ohm ±5%, 1/8 w; MIL type RCR07G241JS.	7-69
A2A6A14R5		RESISTOR, FIXED, COMPOSITION: 51 ohm ±5%, 1/8 w; MIL type RCR07G510JS.	7-69
A2A6A14R6		RESISTOR: Item 32.	7-69
A2A6A14R7		RESISTOR, VARIABLE, WIRE-WOUND: 1000 ohm ±5%, 3/4 w; MIL type M39015/3-007XM.	7-69
A2A6A14R8		RESISTOR: Item 29.	7-69
A2A6A14R9 and A2A6A14R10		RESISTOR, FIXED, COMPOSITION: 470 ohm ±5%, 1/8 w; MIL type RCR07G471JS.	7-69
A2A6A14R11		RESISTOR, FIXED, COMPOSITION: 820 ohm ±5%, 1/8 w; MIL type RCR07G821JS.	7-69
A2A6A14R12		RESISTOR: Item 30.	7-69
A2A6A14R13		RESISTOR: Item 32.	7-69
A2A6A14R14		RESISTOR, FIXED, COMPOSITION: 120 ohm ±5%, 1/8 w; MIL type RCR05G121JS.	7-69
A2A6A14R15		RESISTOR, FIXED, COMPOSITION: 51 ohm ±5%, 1/8 w; MIL type RCR05G510JS.	7-69
A2A6A14R16		RESISTOR: Item 32.	7-69
A2A6A14R17		RESISTOR, VARIABLE WIRE-WOUND: 1000 ohm ±5%, 3/4 w; MIL type M39015/3-007XM.	7-69
A2A6A14R18		RESISTOR: Item 29.	7-69
A2A6A14R19 and A2A6A14R20		RESISTOR, FIXED, COMPOSITION: 240 ohm ±5%, 1/8 w; MIL type RCR05G241JS.	7-69
A2A6A14R21		RESISTOR, FIXED, COMPOSITION: 820 ohm ±5%, 1/8 w; MIL type RCR05G821JS.	7-69
A2A6A14R22		RESISTOR: Item 30.	7-69
A2A6A14R23		RESISTOR: Item 32.	7-69
A2A6A14R24		RESISTOR, FIXED, COMPOSITION: 220 ohm ±5%, 1/8 w; MIL type RCR05G221JS.	7-69
A2A6A14R25		RESISTOR, FIXED, COMPOSITION: 51 ohm ±5%, 1/8 w; MIL type RCR05G510JS.	7-69
A2A6A14R26		RESISTOR: Item 32.	7-69

Table 7-2. Radio Receiver R-1051H/URR, Parts List (Continued)

TRANSLATOR/SYNTHESIZER ASSEMBLY A2A6

REFERENCE DESIGNATION	NOTES	NAME AND DESCRIPTION	FIGURE NUMBER
A2A6A14R27		RESISTOR, VARIABLE, WIRE-WOUND: 1000 ohm ±5%, 3/4 w; MIL type M39015/3-007XM.	7-69
A2A6A14R28		RESISTOR: Item 29.	7-69
A2A6A14R29 and A2A6A14R30		RESISTOR, FIXED, COMPOSITION: 430 ohm ±5%, 1/8 w; MIL type RCR05G431JS.	7-69
A2A6A14R31		RESISTOR, FIXED, COMPOSITION: 220 ohm ±5%, 1/8 w; MIL type RCR05G221JS.	7-69
A2A6A14TP1		CONNECTOR, ELECTRICAL, TEST-POINT TYPE: Item 21.	7-69
A2A6A14TP2		CONNECTOR, ELECTRICAL, TEST-POINT TYPE: Item 22.	7-69
A2A6A14TP3		CONNECTOR, ELECTRICAL, TEST-POINT TYPE: Item 23.	7-69
A2A6A14TP4		CONNECTOR, ELECTRICAL, TEST-POINT TYPE: MIL type M39024/18-02.	7-69
A2A6A14TP5		CONNECTOR, ELECTRICAL, TEST-POINT TYPE: MIL type M39024/18-07.	7-69
A2A6A14TP6		CONNECTOR, ELECTRICAL, TEST-POINT TYPE: MIL type M39024/18-08.	7-69
A2A6A14TP7		CONNECTOR, ELECTRICAL, TEST-POINT TYPE: MIL type M39024/18-10.	7-69
A2A6A14W1		ASSEMBLY, COAXIAL: 2.75 in. long; mfr 98738, dwg 30A228383-14.	7-69
A2A6A14W2		ASSEMBLY, COAXIAL: 2.87 in. long; mfr 98738, dwg 30A228383-15.	7-69
A2A6A14W3		ASSEMBLY, COAXIAL: 3.81 in. long; mfr 98738, dwg 30A228383-16.	7-69
A2A6A14W4		ASSEMBLY, COAXIAL: 2.87 in. long; mfr 98738, dwg 30A228282-15.	7-69
A2A6A14W5		ASSEMBLY, COAXIAL: 2.68 in. long; mfr 98738 dwg 30A228383-12	7-69
A2A6A14W6		ASSEMBLY, COAXIAL: 3.25 in. long; mfr 98738, dwg 30A228383-13.	7-69
A2A6A15		CIRCUIT CARD ASSEMBLY, POWER SUPPLY: 5.75 in. long, 3.0 in. w; mfr 98738, part no. 01A228311-02.	7-70
A2A6A15C1		CAPACITOR, FIXED, MICA: 470 pF ±2%, 500 Vdc working; MIL type CMR06F471GPDM.	7-70
A2A6A15C2		CAPACITOR, FIXED, ELECTROLYTIC: 47 uF ±10%, 35 Vdc working; MIL type M39003/01-2312.	7-70
A2A6A15C3		CAPACITOR: Item 19.	
A2A6A15C4		CAPACITOR, FIXED, CERAMIC: 0.01 uF ±10%, 200 Vdc working; MIL type M39014/02-1298.	7-70

Table 7-2. Radio Receiver R-1051H/URR, Parts List (Continued)

TRANSLATOR/SYNTHESIZER ASSEMBLY A2A6

REFERENCE DESIGNATION	NOTES	NAME AND DESCRIPTION	FIGURE NUMBER
A2A6A15C5		CAPACITOR, FIXED, CERAMIC: 2200 pF ±20%, 200 Vdc working; MIL type M39014/02-1207.	7-70
A2A6A15C6		CAPACITOR, FIXED, CERAMIC: 0.022 uF ±10%, 100 Vdc working; MIL type M39014/02-1302.	7-70
A2A6A15C7		CAPACITOR, FIXED, CERAMIC: 0.01 uF ±10%, 200 Vdc working; MIL type M39014/02-1298.	7-70
A2A6A15C8		Not used.	
A2A6A15C9 and A2A6A15C10		CAPACITOR, FIXED, ELECTROLYTIC: 100 uF ±10%, 20 Vdc working; MIL type M39003/01-2302.	7-70
A2A6A15C11		CAPACITOR, FIXED, CERAMIC: 1000 pF ±10%, 200 Vdc working; MIL type M39014/01-1237.	7-70
A2A6A15C12		CAPACITOR: Item 19.	
A2A6A15C13		CAPACITOR, FIXED, CERAMIC: 0.15 uF ±10%, 50 Vdc working; MIL type M39014/02-1314.	7-70
A2A6A15C14 thru A2A6A15C16		CAPACITOR: Item 19.	7-70
A2A6A15CR1		DIODE: MIL type JAN1N751A	7-70
A2A6A15CR2		SEMICONDUCTOR DEVICE, DIODE: Mfr 85072, part no. 1N5828, 98738, dwg 48P228424-01. (Attaching Parts) AM(1) FA(1)	7-70
A2A6A15E1		TERMINAL, STUD: Solder only.	7-70
A2A6A15E2		LUG: 0.80 in. long, 0.38 in. w; mfr 79963, part no. 29-10, 98738, dwg 29S111221-7.	7-70
A2A6A15E3		Not used.	
A2A6A15E4 thru A2A6A15E6		TERMINAL, STUD: Solder only.	7-70
A2A6A15L1		INDUCTOR, POWER: 1.37 in. dia, 0.75 in. long; mfr 96253, part no. TT111786, 98738, dwg 24A226361-01. (Attaching Parts) AB(1) L(1)	7-70
A2A6A15L2		INDUCTOR, POWER: 1.00 in. dia, 0.56 in. long; mfr 81815, part no. S017, 98738, dwg 25P228380-01. (Attaching Parts) AB(1) L(1)	7-70
A2A6A15MP1		BRACKET, RIGHT ANGLE: 0.546 in. x 0.560 in., 0.5 in. w, 0.062 in. thk; aluminum alloy; mfr 98738, part no. 07P238806-21-11. (Attaching Parts) FB(20	7-70
A2A6A15MP2		COVER: 1.562 in. long, 1.359 in. w; mfr 98738 part no. 15P226757-24-11.	7-70
A2A6A15MP3 and A2A6A15MP4		PAD, TRANSISTOR MOUNTING: Mfr 13103, part no. 7717-109, 98738, dwg 14S132171-39A-9.	7-70

Table 7-2. Radio Receiver R-1051H/URR, Parts List (Continued)

TRANSLATOR/SYNTHESIZER ASSEMBLY A2A6

REFERENCE DESIGNATION	NOTES	NAME AND DESCRIPTION	FIGURE NUMBER
A2A6A15Q1 and A2A6A15Q2		TRANSISTOR: Item 65.	7-70
A2A6A15Q3		TRANSISTOR: Mfr 04713, part no. 2N5428, 98738, dwg 48P226466-01. (Attaching Parts) DY(2) K(2) L(2) M(2)	7-70
A2A6A15R1		RESISTOR, FIXED, COMPOSITION: 20k ohm ±5%, 1/4 w; MIL type RCR07G203JS.	7-70
A2A6A15R2		RESISTOR, FIXED, COMPOSITION: 82k ohm ±5%, 1/4 w; MIL type RCR07G823JS.	7-70
A2A6A15R3		RESISTOR, FIXED, COMPOSITION: 20k ohm ±5%, 1/4 w; MIL type RCR07G203JS.	7-70
A2A6A15R4		RESISTOR, FIXED, COMPOSITION: 39k ohm ±5%, 1/4 w; MIL type RCR07G393JS.	7-70
A2A6A15R5		RESISTOR, FIXED, COMPOSITION: 4300 ohm ±5%, 1/4 w; MIL type RCR07G432JS.	7-70
A2A6A15R6		RESISTOR, FIXED, COMPOSITION: 47k ohm ±5%, 1/4 w; MIL type RCR07G473JS.	7-70
A2A6A15R7		RESISTOR: Item 39.	7-70
A2A6A15R8		RESISTOR: Item 36.	7-70
A2A6A15R9		RESISTOR, FIXED, WIRE-WOUND: 0.15 ohm ±1%, 2 w; MIL type RWR80SR150FR.	7-70
A2A6A15R10		RESISTOR, FIXED, COMPOSITION: 68 ohm ±5%, 1/4 w; MIL type RCR07G680JS.	7-70
A2A6A15R11		RESISTOR, FIXED, COMPOSITION: 200 ohm ±5%, 1/4 w; MIL type RCR07G201JS.	7-70
A2A6A15R12		RESISTOR: Item 36.	7-70
A2A6A15R13		RESISTOR: Item 38.	7-70
A2A6A15R14		RESISTOR, FIXED, FILM: 4300 ohm ±2%, 1/4 w; MIL type RLR07C4301GR.	7-70
A2A6A15R15A	1	RESISTOR, FIXED, FILM: 1.1k ohm ±2%, 1/4 w; MIL type RLR07C1101GR.	7-70
A2A6A15R15B	1	RESISTOR, FIXED, FILM: 1.3k ohm ±2%, 1/4 w; MIL type RLR07C1301GR.	7-70
A2A6A15R15C	1	RESISTOR, FIXED, FILM: 1.5k ohm ±2%, 1/4 w; MIL type RLR07C1501GR.	7-70
A2A6A15R15D	1	RESISTOR, FIXED, FILM: 1.6k ohm ±2%, 1/4 w; MIL type RLR07C1601GR.	7-70
A2A6A15R15E	1	RESISTOR, FIXED, FILM: 1.8k ohm ±2%, 1/4 w; MIL type RLR07C1801GR.	7-70
A2A6A15R15F	1	RESISTOR, FIXED, FILM: 2k ohm ±2%, 1/4 w; MIL type RLR07C2001GR.	7-70
A2A6A15R15G	1	RESISTOR, FIXED, FILM: 2.2k ohm ±2%, 1/4 w; MIL type RLR07C2201GR.	7-70
A2A6A15R15H	1	RESISTOR, FIXED, FILM: 2.4k ohm ±2%, 1/4 w; MIL type RLR07C2401GR.	7-70

Table 7-2. Radio Receiver R-1051H/URR, Parts List (Continued)

TRANSLATOR/SYNTHESIZER ASSEMBLY A2A6

REFERENCE DESIGNATION	NOTES	NAME AND DESCRIPTION	FIGURE NUMBER
A2A6A15R16		RESISTOR, FIXED, FILM: 3k ohm ±2%, 1/4 w; MIL type RLR07C3001GR.	7-70
A2A6A15TP1		CONNECTOR, ELECTRICAL, TEST-POINT TYPE: Item 21.	7-70
A2A6A15TP2		CONNECTOR, ELECTRICAL, TEST-POINT TYPE: Item 22.	7-70
A2A6A15TP3		Not used.	
A2A6A15TP4		CONNECTOR, ELECTRICAL, TEST-POINT TYPE: MIL type M39024/18-02.	7-70
A2A6A15U1		INTEGRATED CIRCUIT: MIL type M38510/10304BGX.	7-70
A2A6A15U2		INTEGRATED CIRCUIT: Mfr 27014, part no. LM105H883, 98738, dwg 48P226461-01.	7-70
A2A6A16		CIRCUIT CARD ASSEMBLY: Frequency Generator, 5.750 in. long, 3.0 in. w; mfr 98738, part no. 01A228760-01.	7-71
A2A6A16C1		Not used.	
A2A6A16C2		CAPACITOR, FIXED, CERAMIC: 22.0 pF ±10%, 200 Vdc working; MIL type M39014/01-1207.	7-71
A2A6A16C3 and A2A6A16C4		CAPACITOR: Item 11.	
A2A6A16C5 thru A2A6A16C17		CAPACITOR: Item 15.	7-71
A2A6A16C18		CAPACITOR: Item 19.	7-71
A2A6A16C19		Not used.	
A2A6A16C20		CAPACITOR, FIXED, ELECTROLYTIC: 2.2 uF ±10%, 20 Vdc working; MIL type M39003/01-2283.	7-71
A2A6A16C21		CAPACITOR: Item 11.	7-71
A2A6A16C22		CAPACITOR, FIXED, CERAMIC: 18,000 pF ±10%, 50 Vdc working; MIL type M39003/01-2283.	7-71
A2A6A16C23 and A2A6A16C24		CAPACITOR: Item 19.	7-71
A2A6A16C25		CAPACITOR: Item 11.	7-71
A2A6A16C26		CAPACITOR, FIXED, ELECTROLYTIC: 56.0 uF ±10%, 6 Vdc working; MIL type M39003/01-2246.	7-71
A2A6A16C27		Not used.	
A2A6A16C28 and A2A6A16C29		CAPACITOR: Item 15.	7-71
A2A6A16C30		CAPACITOR, FIXED, MICA: 20 pF ±5%, 500 Vdc working; MIL TYPE CMR04E200JPDM.	7-71
A2A6A16C31		CAPACITOR: Item 15.	7-71

Table 7-2. Radio Receiver R-1051H/URR, Parts List (Continued)

TRANSLATOR/SYNTHESIZER ASSEMBLY A2A6

REFERENCE DESIGNATION	NOTES	NAME AND DESCRIPTION	FIGURE NUMBER
A2A6A16C32		Not used.	
A2A6A16C33 thru A2A6A16C38		CAPACITOR: Item 15.	7-71
A2A6A16CR1		SEMICONDUCTOR DEVICE, DIODE: MIL type JAN1N827.	7-71
A2A6A16CR2 and A2A6A16CR3		SEMICONDUCTOR DEVICE, DIODE: MIL type JAN1N914.	7-71
A2A6A16CR4		SEMICONDUCTOR DEVICE, DIODE: MIL type JAN758A.	7-71
A2A6A16CR5		SEMICONDUCTOR DEVICE, DIODE: 12 V reverse, 250 mA, 0.104 in. dia, 0.300 in. h; mfr 18518, part no. HA-142; 98738, dwg 48P226450-02.	7-71
A2A6A16L1 and A2A6A16L2		Not used.	
A2A6A16L3		INDUCTOR: MIL type MS75085-7.	7-71
A2A6A16L4		Not used.	
A2A6A16L5		INDUCTOR, TOROIDAL, 36 TURNS: 7.10 mH ±0.1%; mfr 98738, part no. 24A226360-22-11.	7-71
A2A6A16L6		INDUCTOR: MIL type MS75084-9.	7-71
A2A6A16L7		INDUCTOR: MIL type MS75085-7.	7-71
A2A6A16MP1 and A2A6A16MP2		EJECTOR, CIRCUIT CARD: Item 28.	7-71
A2A6A16MP3 and A2A6A16MP4		INSULATOR, WASHER: .005 in. thk; mica; mfr 08289, part no. MW-250-125-005, 98738, dwg 04P226362-01. (Attaching Parts) AL(2) AG92) CQ(2)	7-71
A2A6A16P1		CONNECTOR, SUB-MINIATURE: 0.494 in. w, 2.729 in. 1ong; mfr 91146, part no. DCM53514-1287, 98738, dwg 09P226666-03.	7-71
A2A6A16P1 A1 thru A2A6A16P1 A4		PLUG, CONNECTOR: 0.929 in. long, mfr 71785, part no. DM53740-5001, 98738, dwg 09P226565-17.	7-71
A2A6A16Q1 thru A2A6A16Q5		SEMICONDUCTOR DEVICE, TRANSISTOR: MIL type JAN2N2222A.	7-71
A2A6A16Q6		SEMICONDUCTOR DEVICE, TRANSISTOR: MIL type JAN2N2907A.	7-71
A2A6A16R1		RESISTOR, FIXED, COMPOSITION: 51 ohm ±5%, 1/4 w; MIL type RCR07G510JS.	7-71
A2A6A16R2		RESISTOR, FIXED, COMPOSITION: 8.2k ohm ±5%, 1/4 w; MIL type RCR07C822JS.	7-71

Table 7-2. Radio Receiver R-1051H/URR, Parts List (Continued)

TRANSLATOR/SYNTHESIZER ASSEMBLY A2A6

REFERENCE DESIGNATION	NOTES	NAME AND DESCRIPTION	FIGURE NUMBER
A2A6A16R3		RESISTOR, FIXED, COMPOSITION: 3.3k ohm ±5%, 1/4 w; MIL type RCR07C332JS.	7-71
A2A6A16R4		RESISTOR, FIXED, COMPOSITION: 51 ohm ±5%, 1/4 w; MIL type RCR07G510JS.	7-71
A2A6A16R5		RESISTOR, FIXED, COMPOSITION: 360 ohm ±5%, 1/4 w; MIL type RCR07G361JS.	7-71
A2A6A16R6 and A2A6A16R7		RESISTOR: Item 39.	7-71
A2A6A16R8		RESISTOR: Item 37.	7-71
A2A6A16R9		RESISTOR, FIXED, COMPOSITION: 510 ohm ±5%, 1/4 w; MIL type RCR07G511JS.	7-71
A2A6A16R10 and A2A6A16R11		RESISTOR, FIXED, COMPOSITION: 470 ohm ±5%, 1/4 w; MIL type RCR07G471JS.	7-71
A2A6A16R12		RESISTOR: Item 39.	7-71
A2A6A16R13 and A2A6A16R14		RESISTOR, FIXED, COMPOSITION: 5.1k ohm ±5%, 1/4 w; MIL type RCR07G512JS.	7-71
A2A6A16R15		RESISTOR: Item 38	
A2A6A16R16		Not used.	
A2A6A16R17		RESISTOR, FIXED, FILM: 150k ohm ±1%, 1/10 w; MIL type RNC55H1503FM.	7-71
A2A6A16R18		RESISTOR, VARIABLE, WIRE-WOUND: 10k ohm ±5%, MIL type M39015/3-010XM.	7-71
A2A6A16R19		RESISTOR, FIXED, FILM: 36.5k ohm ±1%, 1/20 w; MIL type RNC50H3652FM.	7-71
A2A6A16R20		RESISTOR, FIXED, COMPOSITION: 16k ohm ±5%, 1/4 w; MIL type RCR07G163JS.	7-71
A2A6A16R21		RESISTOR, FIXED, FILM: 7.5 ohm ±1%, 1/20 w; MIL type RNC50H7501FR.	7-71
A2A6A16R22		RESISTOR, VARIABLE, WIRE-WOUND: 5k ohm ±5%, MIL type M39015/3-009XM.	7-71
A2A6A16R23		RESISTOR, FIXED, FILM: 3.01k ohm ±1%, 1/20 w; MIL type RNC50H3011FS.	7-71
A2A6A16R24		RESISTOR, FIXED, COMPOSITION: 470 ohm ±5%, 1/4 w; MIL type RCR07G471JS.	7-71
A2A6A16R25 and A2A6A16R26		RESISTOR: Item 39.	7-71
A2A6A16R27		RESISTOR, FIXED, COMPOSITION: 120 ohm ±5%, 1/4 w; MIL type RCR07G121JS.	7-71
A2A6A16R28		RESISTOR, FIXED, COMPOSITION: 300k ohm ±5%, 1/4 w; MIL type RCR07G304JS.	7-71
A2A6A16R29		RESISTOR, FIXED, COMPOSITION: 1.8k ohm ±5%, 1/4 w; MIL type RCR07G302JS.	7-71

Table 7-2. Radio Receiver R-1051H/URR, Parts List (Continued)

TRANSLATOR/SYNTHESIZER ASSEMBLY A2A6

REFERENCE DESIGNATION	NOTES	NAME AND DESCRIPTION	FIGURE NUMBER
A2A6A16R30		RESISTOR, FIXED, COMPOSITION: 1.8k ohm ±5%, 1/4 w; MIL type RCR07G182JS.	7-71
A2A6A16R31		Not used.	
A2A6A16R32		RESISTOR, FIXED, COMPOSITION: 6.2k ohm ±5%, 1/4 w; MIL type RCR07G622JS.	7-71
A2A6A16R33		RESISTOR, FIXED, COMPOSITION: 1M ohm ±5%, 1/4 w; MIL type RCR07G105JS.	7-71
A2A6A16R34		RESISTOR, FIXED, COMPOSITION: 510 ohm ±5%, 1/4 w; MIL type RCR07G511JS.	7-71
A2A6A16R35 and A2A6A16R36		RESISTOR, FIXED, COMPOSITION: 470 ohm ±5%, 1/4 w; MIL type RCR07G471JS.	7-71
A2A6A16R37		RESISTOR, FIXED, COMPOSITION: 10 ohm ±5%, 1/4 w; MIL type RCR07G100JS.	7-71
A2A6A16R38		RESISTOR, FIXED, COMPOSITION: 360 ohm ±5%, 1/4 w; MIL type RCR20G361JS.	7-71
A2A6A16R39		RESISTOR, FIXED, COMPOSITION: 2k ohm ±5%, 1/4 w; MIL type RCR07G202JS.	7-71
A2A6A16TP1		TEST POINT, BROWN: MIL type M39024/18-03.	7-71
A2A6A16TP2		TEST POINT, RED: MIL type M39024/18-04.	7-71
A2A6A16TP3		TEST POINT, ORANGE: MIL type M39024/18-05.	7-71
A2A6A16TP4		TEST POINT, YELLOW: MIL type M39024/18-02.	7-71
A2A6A16U1		INTEGRATED CIRCUIT: MIL type M38510/00105BCX.	7-71
A2A6A16U2 and A2A6A16U3		INTEGRATED CIRCUIT: Mfr 18324, part no. 54LS390, 98738, dwg 48P228887-01.	7-71
A2A6A16U4		INTEGRATED CIRCUIT: MIL type M38510/00104BCX.	7-71
A2A6A16U5		INTEGRATED CIRCUIT: MIL type M38510/32702BCX.	7-71
A2A6A16U6 and A2A6A16U7		INTEGRATED CIRCUIT: Item 76.	7-71
A2A6A16U8		INTEGRATED CIRCUIT: Mfr 01295, part no. MC4324DCBG, 98738, dwg 48P226457-01.	7-71
A2A6A16U9		INTEGRATED CIRCUIT: Mfr 04713, part no. MC4344DCBS, 98738, dwg 48P226446-01.	7-71
A2A6A16U10		INTEGRATED CIRCUIT: Mfr 18723, part no. CA3140S3, 98738, dwg 48P226682-01.	7-71
A2A6A16U11		INTEGRATED CIRCUIT: Mfr 04713, part no. MC1648, 98738, dwg 48P228371-01.	7-71
A2A6A16U12		INTEGRATED CIRCUIT: MIL type M38510/00105BCX.	7-71
A2A6A16U13		INTEGRATED CIRCUIT: MIL type M38510/00205BCX.	7-71
A2A6A16U14		INTEGRATED CIRCUIT: Mfr 18723, part no. CA3140S3, 98738, dwg 48P226682-01.	7-71

Table 7-2. Radio Receiver R-1051H/URR, Parts List (Continued)

TRANSLATOR/SYNTHESIZER ASSEMBLY A2A6

REFERENCE DESIGNATION	NOTES	NAME AND DESCRIPTION	FIGURE NUMBER
A2A6A16W1		ASSEMBLY, COAXIAL: 3.00 in. long; mfr 98738, dwg 30A228383-02.	7-71
A2A6A16W2		ASSEMBLY, COAXIAL: 3.18 in. long, mfr 98738, dwg 30A228383-22.	7-71
A2A6A16W3 and A2A6A16W4		ASSEMBLY, COAXIAL: 2.00 in. long, mfr 98738, dwg 30A228383-19.	7-71
A2A6A17		CIRCUIT CARD ASSEMBLY, 100 kHz: 5.75 in. long, 3.0 in. w; mfr 98738, part no. 01A228758-01.	7-72
A2A6A17C1		CAPACITOR: Item 19.	7-72
A2A6A17C2		CAPACITOR: Item 18.	7-72
A2A6A17C3		CAPACITOR, FIXED (NON-SOLID ELECTROLYTIC), TANTALUM: 10 uF ±10%, 50 V; MIL type M39006/10-8318.	7-72
A2A6A17C4		CAPACITOR, FIXED, CERAMIC: 100 pF ±10%, 200 Vdc working; MIL type M39014/01-1219.	7-72
A2A6A17C5		CAPACITOR: Item 19.	7-72
A2A6A17C6		CAPACITOR, FIXED, ELECTROLYTIC: 3.3 uF ±20%, 15 Vdc working; MIL type M39003/01-2269.	7-72
A2A6A17C7 thru A2A6A17C12		Not used.	
A2A6A17C13 and A2A6A17C14		CAPACITOR: Item 15.	7-72
A2A6A17C15		CAPACITOR, FIXED, MICA: 82 pF ±2%, 500 Vdc working; MIL type CMR04E820GPDM.	7-72
A2A6A17C16		CAPACITOR: Item 15.	7-72
A2A6A17C17		CAPACITOR, FIXED, MICA DIELECTRIC: 120 pF, ±2%, 500 Vdc working; MIL type CMR04F121GPDM.	7-72
A2A6A17C18		CAPACITOR, FIXED, MICA: 82 pF ±2%, 500 Vdc working; MIL type CMR0E820GPDM.	7-72
A2A6A17C19 thru A2A6A17C21		CAPACITOR: Item 15.	7-72
A2A6A17C22		Not used.	
A2A6A17C23		CAPACITOR: Item 11.	7-72
A2A6A17C24		Not used.	
A2A6A17C25		CAPACITOR: Item 15.	7-72
A2A6A17C26		CAPACITOR: Item 15.	7-72
A2A6A17C27		CAPACITOR: Item 15.	7-72
A2A6A17C28		CAPACITOR: Item 19.	7-72

Table 7-2. Radio Receiver R-1051H/URR, Parts List (Continued)

TRANSLATOR/SYNTHESIZER ASSEMBLY A2A6

REFERENCE DESIGNATION	NOTES	NAME AND DESCRIPTION	FIGURE NUMBER
A2A6A17C29 thru A2A6A17C32		CAPACITOR: Item 15.	7-72
A2A6A17C33		CAPACITOR: Item 13.	7-72
A2A6A17C34		CAPACITOR: Item 19.	7-72
A2A6A17C35		CAPACITOR, FIXED, CERAMIC: 390 pF, ±10%, 200 Vdc working; MIL type M39014/01-1230.	7-72
A2A6A17C36		CAPACITOR: Item 13.	7-72
A2A6A17CR1		SEMICONDUCTOR DEVICE, DIODE: Mfr 07263, part no. FJT1100; 98738, dwg 48P228591-01.	7-72
A2A6A17L1 and A2A6A17L2		Not used.	
A2A6A17L3		COIL, RF: 0.68 uH; MIL type MS75083-11.	7-72
A2A6A17L4		COIL, RF: 0.62 uH; MIL type MS75083-12.	7-72
A2A6A17L5		COIL, RF: 0.68 uH; MIL type MS75083-11.	7-72
A2A6A17L6		COIL, RF: 0.82 uH; MIL type MS75083-12.	7-72
A2A6A17L7		COIL, RF: 0.68 uH; MIL type MS75083-11.	7-72
A2A6A17L8		COIL, RF: 1 uH; MIL type MS75083-13.	7-72
A2A6A17L9		Not used.	
A2A6A17L10		COIL, RF: 0.33 uH; MIL type MS75087-7.	7-72
A2A6A17MP1 and A2A617MP2		EJECTOR, CIRCUIT CARD: Item 28.	7-72
A2A6A17P1		CONNECTOR, RECEPTACLE, ELECTRICAL: 1.534 in. long, 0.329 in. w, 0.494 in. thk mfr 25330, part no. GBM53513-1363; 98738, dwg 09P226666-01. (Attaching Parts) AG(2) AL(2) CQ(2) DS(2)	7-72
A2A6A17P1 A1 and A2A6A17P1 A2		PLUG, CONNECTOR: 0.929 in. long, mfr 71785, part no. DM53740-5001; 98738, dwg 09P226565-17.	7-72
A2A6A17Q1 thru A2A6A17Q5		TRANSISTOR: Item 64.	7-72
A2A6A17Q6 and A2A6A17Q7		TRANSISTOR: MIL type JAN2N2369A.	7-72
A2A6A17Q8		TRANSISTOR: MIL type JAN2N2907A.	7-72
A2A6A17R1		RESISTOR: Item 36.	7-72
A2A6A17R2		RESISTOR: Item 38.	7-72
A2A6A17R3		RESISTOR, FIXED, COMPOSITION: 910 ohm ±5%, 1/4 w; MIL type RCR07G911JS.	7-72
A2A6A17R4		RESISTOR: Item 52.	7-72
A2A6A17R5		RESISTOR: Item 35.	7-72

Table 7-2. Radio Receiver R-1051H/URR, Parts List (Continued)

TRANSLATOR/SYNTHESIZER ASSEMBLY A2A6

REFERENCE DESIGNATION	NOTES	NAME AND DESCRIPTION	FIGURE NUMBER
A2A6A17R6		RESISTOR: Item 49.	7-72
A2A6A17R7		RESISTOR: Item 35.	7-72
A2A6A17R8		RESISTOR, FIXED, COMPOSITION: 22k ohm ±5%, 1/4 w; MIL type RCR07G223JS.	7-72
A2A6A17R9		RESISTOR, FIXED, COMPOSITION: 200 ohm ±5%, 1/4 w; MIL type RCR07G210JS.	7-72
A2A6A17R10		RESISTOR, VARIABLE, WIRE-WOUND: 1000 ohm ±5%, 3/4 w; 27 Vdc working; MIL type M39015/3-007XM.	7-72
A2A6A17R11		RESISTOR: Item 45.	7-72
A2A6A17R12 and A2A6A17R13		RESISTOR, FIXED, COMPOSITION: 300 ohm ±5%, 1/4 w; MIL type RCR07G301JS.	7-72
A2A6A17R14		RESISTOR: Item 37.	7-72
A2A6A17R15		RESISTOR: Item 38.	7-72
A2A6A17R16		RESISTOR: Item 39.	7-72
A2A6A17R17		RESISTOR: Item 38.	7-72
A2A6A17R18		RESISTOR, FIXED, COMPOSITION: 1.5k ohm ±2%, 1/4 w; MIL type RCR07G152JS.	7-72
A2A6A17R19		RESISTOR: Item 38.	7-72
A2A6A17R20 and A2A6A17R21		Not used.	
A2A6A17R22 thru A2A6A17R27		RESISTOR: Item 38.	7-72
A2A6A17R28 and A2A6A17R29		RESISTOR: Item 49.	7-72
A2A6A17R30		RESISTOR: Item 38.	7-72
A2A6A17R31		RESISTOR, FIXED, COMPOSITION: 200 ohm ±5%, 1/4 w; MIL type RCR07G201JS.	7-72
A2A6A17R32		RESISTOR: Item 36.	7-72
A2A6A17R33		RESISTOR, FIXED, COMPOSITION; 430 ohm ±5%, 1/4 w; MIL type RCR07G431JS.	7-72
A2A6A17R34		RESISTOR: Item 36.	7-72
A2A6A17R35		RESISTOR: Item 52.	7-72
A2A6A17R36		RESISTOR: Item 45.	7-72
A2A6A17TP1		CONNECTOR, ELECTRICAL, TEST-POINT TYPE: Item 21.	7-72
A2A6A17TP2		CONNECTOR, ELECTRICAL, TEST-POINT TYPE: Item 22.	7-72
A2A6A17TP3		CONNECTOR, ELECTRICAL, TEST-POINT TYPE: Item 23.	7-72
A2A6A17U1		INTEGRATED CIRCUIT: Mfr 04713, part no. MC4344DCBS, 98738, dwg 48P226446-01.	7-72

Table 7-2. Radio Receiver R-1051H/URR, Parts List (Continued)

TRANSLATOR/SYNTHESIZER ASSEMBLY A2A6

REFERENCE DESIGNATION	NOTES	NAME AND DESCRIPTION	FIGURE NUMBER
A2A6A17U2A	*	INTEGRATED CIRCUIT: Mfr 04713, part no. MC12513, 98738, dwg 48P226458-01.	7-72
A2A6A17U2B		INTEGRATED CIRCUIT: Mfr 07263, part no. 11C90, or mfr 58317, part no. 8680A, 98738, dwg 48P228880-01. Note: this is alternate part to U2A; U2A is preferred.	
A2A6A17U3		INTEGRATED CIRCUIT: Mfr 04713, part no. 54F191BCXJC, 98738, dwg 48P228739-01.	7-72
A2A6A17U4 and A2A6A17U5		INTEGRATED CIRCUIT: Item 76.	7-72
A2A6A17U6		INTEGRATED CIRCUIT: Mfr 01295, part no. 54S168J, 98738, dwg 48P228737-01.	7-72
A2A6A17W1		ASSEMBLY, COAXIAL: 3.25 in. long; mfr 98738, part no. 30A228383-10.	7-72
A2A6A17W2		ASSEMBLY, COAXIAL: 3.75 in. long; mfr 98738, part no. 30A228383-07.	7-72
A2A6A17A1		VCO ASSEMBLY: Mfr 98738, part no. 01A226758-21-11.	7-72
A2A6A18		Not used.	
A2A6A19		CIRCUIT CARD ASSEMBLY: 10 kHz/ 1 kHz/ 100 Hz (No. 2): 5.75 in. long, 3 in. w; mfr 98738, part no. 01A228715-01.	7-73
A2A6A19C1		CAPACITOR, FIXED, ELECTROLYTIC: 10 uF ±10%, 20 Vdc working; MIL type M39003/01-2286.	7-73
A2A6A19C2		CAPACITOR, FIXED, TANTALUM: 10 uF ±10%, 50 Vdc working; mfr 98738, part no. 21P228861-01.	7-73
A2A6A19C3 and A2A6A19C4		CAPACITOR: Item 15.	7-73
A2A6A19C5		CAPACITOR: Item 19.	7-73
A2A6A19C6 and A2A6A19C7		CAPACITOR: Item 15.	7-73
A2A6A19C8		CAPACITOR: Item 19.	7-73
A2A6A19C9		CAPACITOR: Item 15.	7-73
A2A6A19C10		CAPACITOR, FIXED, MICA: 1200 uF ±2%, 500 Vdc working; MIL type CMR06F122GPDM.	7-73
A2A6A19C11		CAPACITOR, FIXED, MICA: 1800 uF ±2%, 500 Vdc working; MIL type CMR06F182GPDM.	7-73

Table 7-2. Radio Receiver R-1051H/URR, Parts List (Continued)

TRANSLATOR/SYNTHESIZER ASSEMBLY A2A6

REFERENCE DESIGNATION	NOTES	NAME AND DESCRIPTION	FIGURE NUMBER
A2A6A19C12		CAPACITOR, FIXED, MICA: 1200 uF ±2%, 500 Vdc working; MIL type CMR06F122GPDM.	7-73
A2A6A19C13		CAPACITOR: Item 19.	7-73
A2A6A19C14		CAPACITOR, FIXED, ELECTROLYTIC: 6.8 uF ±10%, 35 Vdc working; MIL type M39003/01-2304.	7-73
A2A6A19L1		INDUCTOR: MIL type MS75089-1.	7-73
A2A6A19L2		INDUCTOR: MIL type MS75089-5.	7-73
A2A6A19L3 thru A2A6A19L5		Not used.	
A2A6A19L6		INDUCTOR: MIL type MS75084-6.	7-73
A2A6A19L7		INDUCTOR: MIL type MS75084-7.	7-73
A2A6A19L8		INDUCTOR: MIL type MS75084-6.	7-73
A2A6A19L9		INDUCTOR: MIL type MS75084-7.	7-73
A2A6A19L10		INDUCTOR: MIL type MS75084-6.	7-73
A2A6A19MP1 and A2A6A19MP2		EJECTOR, CIRCUIT CARD: Item 28.	
A2A6A19P1		CONNECTOR, SUB-MINIATURE: 2.729 in. long, .494 in. w; mfr 91146, part no. DCM53514-1287, 98738, dwg 09P226666-03.	7-73
A2A6A19P1 A1 thru A2A6A19P1 A4		PLUG, CONNECTOR: 0.929 in. long, mfr 71785, part no. DM53740-5001; 98738, dwg 09P226565-17.	7-73
A2A6A19Q1		SEMICONDUCTOR DEVICE, TRANSISTOR: MIL type JAN2N2369A.	7-73
A2A6A19Q2		SEMICONDUCTOR DEVICE, TRANSISTOR: MIL type JAN2N2907A.	7-73
A2A6A19Q3		SEMICONDUCTOR DEVICE, TRANSISTOR: MIL type JAN2N2369A.	7-73
A2A6A19R1		RESISTOR, FIXED, COMPOSITION: 820 ohm ±5%, 1/4 w; MIL type RCR07G821JS.	7-73
A2A6A19R2		RESISTOR, FIXED, COMPOSITION: 200 ohm ±5%, 1/4 w; MIL type RCR07G201JS.	7-73
A2A6A19R3		Not used.	
A2A6A19R4		RESISTOR, FIXED, COMPOSITON: 200 ohm ±5%, 1/4 w; MIL type RCR07G201JS.	7-73
A2A6A19R5		RESISTOR, FIXED, COMPOSITION: 820 ohm ±5%, 1/4 w; MIL type RCR07G821JS.	7-73
A2A6A19R6		RESISTOR, FIXED, COMPOSITION: 3.3k ohm ±5%, 1/4 w; MIL type RCR07G332JS.	7-73
A2A6A19R7		RESISTOR, FIXED, COMPOSITION: 27k ohm ±5%, 1/4 w; MIL type RCR07G273JS.	7-73
A2A6A19R8		RESISTOR, FIXED, COMPOSITION: 820 ohm ±5%, 1/4 w; MIL type RCR07G821JS.	7-73

Table 7-2. Radio Receiver R-1051H/URR, Parts List (Continued)

TRANSLATOR/SYNTHESIZER ASSEMBLY A2A6

REFERENCE DESIGNATION	NOTES	NAME AND DESCRIPTION	FIGURE NUMBER
A2A6A19R9		RESISTOR, FIXED, COMPOSITION: 10k ohm ±5%, 1/4 w; MIL type RCR07G103JS.	7-73
A2A6A19R10		RESISTOR, FIXED, COMPOSITION: 130k ohm ±5%, 1/4 w; MIL type RCR07G134JS.	7-73
A2A6A19R11 thru A2A6A19R13		RESISTOR, FIXED, COMPOSITION: 100 ohm ±5%, 1/4 w; MIL type RCR07G101JS.	7-73
A2A6A19R14		RESISTOR, FIXED, COMPOSITION: 360 ohm ±5%, 1/4 w; MIL type RCR07G361JS,	7-73
A2A6A19R15		RESISTOR, FIXED, COMPOSITION: 120 ohm ±5%, 1/4 w; MIL type RCR07G121JS.	7-73
A2A6A19R16		RESISTOR, VARIABLE, NONWIRE-WOUND: 100 ohm ±10%, MIL type RJR24FX101M.	7-73
A2A6A19R17		Not used.	
A2A6A19R18		RESISTOR, FIXED, COMPOSITION: 820 ohm ±5%, 1/4 w; MIL type RCR07G821JS.	7-73
A2A6A19R19		RESISTOR, FIXED, COMPOSITION: 1k ohm ±5%, 1/4 w; MIL type RCR07G102JS.	7-73
A2A6A19TP1		TEST POINT, BROWN: MIL type M39024/18-03.	7-73
A2A6A19TP2		TEST POINT, RED: MIL type M39024/18-04.	7-73
A2A6A19TP3		TEST POINT, ORANGE: MIL type M39024/18-05.	7-73
A2A6A19U1		INTEGRATED CIRCUIT: Mfr 04713, part no. MC4344DCBS, 98738, dwg 48P226446-01.	7-73
A2A6A19U2		INTEGRATED CIRCUIT: Mfr 07263, part no. 54S04, 98738, dwg 48P226448-01.	7-73
A2A6A19U3		INTEGRATED CIRCUIT: Mfr 04713, part no. 54F191BCXJC, 98738, dwg 48P228739-01.	7-73
A2A6A19W1		ASSEMBLY, COAXIAL: 5.38 in. long; mfr 98738, part no. 30A228383-21.	7-73
A2A6A19W2		ASSEMBLY, COAXIAL: 3.18 in. long; mfr 98738, part no. 30A228383-22.	7-73
A2A6A19W3		ASSEMBLY, COAXIAL: 5.75 in. long; mfr 98738, part no. 30A228383-23.	7-73
A2A6A19W4		ASSEMBLY, COAXIAL: 5.50 in. long; mfr 98738, part no. 30A228383-20.	7-73
A2A6A19A1		VCO ASSEMBLY: Mfr 98738, part no. 01A226758-21-11.	7-73
A2A6A20		CIRCUIT CARD ASSEMBLY, 10 kHz/1 kHz/ 100 Hz (No. 1): 5.75 in. long, 3 in. w; mfr 98738, part no. 01A228756-01.	7-74
A2A6A20C1 thru A2A6A20C10		CAPACITOR: Item 15.	7-74

Table 7-2. Radio Receiver R-1051H/URR, Parts List (Continued)

TRANSLATOR/SYNTHESIZER ASSEMBLY A2A6

REFERENCE DESIGNATION	NOTES	NAME AND DESCRIPTION	FIGURE NUMBER
A2A6A20C11		CAPACITOR, FIXED, ELECTROLYTIC: 10 uF ±10%, 20 Vdc; MIL type M39003/01-2286.	7-74
A2A6A20C12		CAPACITOR: Item 15.	7-74
A2A6A20C13		CAPACITOR, FIXED, CERAMIC: 0.1 uF ±10%, 100 Vdc working; MIL type M39014/02-1230.	7-74
A2A6A20C14		CAPACITOR, FIXED, CERAMIC: 100 pF ±10%, 200 Vdc working; MIL type M39014/01-1219.	7-74
A2A6A20C15		CAPACITOR: Item 15.	7-74
A2A6A20L1		INDUCTOR: MIL type MS75087-7.	
A2A6A20MP1 and A2A6A20MP2		EJECTOR, CIRCUIT CARD: Item 28.	7-74
A2A6A20P1		CONNECTOR, SUB-MINIATURE: 0.494 in. w, 2.729 in. l; mfr 91146, part no. DCM53513-1287, 98738, dwg 09P226666-01. (Attaching Parts) AG(2) AL(2) CQ(2)	7-74
A2A6A20P1 A1 and A2A6A20P1 A2	2	PLUG, CONNECTOR: .929 in. long, mfr 71785, part no. DM53740-5001; 98738, dwg 09P226565-17.	7-74
A2A6A20Q1 thru A2A6A20Q8		SEMICONDUCTOR DEVICE, TRANSISTOR: MIL type JAN2N2222A.	7-74
A2A6A20R1		RESISTOR: Item 56A.	7-74
A2A6A20R2		RESISTOR: Item 39.	7-74
A2A6A20R3		RESISTOR: Item 56A.	7-74
A2A6A20R4		RESISTOR: Item 39.	7-74
A2A6A20R5		RESISTOR: Item 56A.	7-74
A2A6A20R6		RESISTOR: Item 39.	7-74
A2A6A20R7		RESISTOR: Item 56A.	7-74
A2A6A20R8		RESISTOR: Item 39.	7-74
A2A6A20R9		RESISTOR: Item 38.	7-74
A2A6A20R10		RESISTOR: Item 56A.	7-74
A2A6A20R11		RESISTOR: Item 38.	7-74
A2A6A20R12		RESISTOR: Item 56A.	7-74
A2A6A20R13		RESISTOR: Item 38.	7-74
A2A6A20R14		RESISTOR: Item 56A.	7-74
A2A6A20R15		RESISTOR: Item 38.	7-74
A2A6A20R16		RESISTOR: Item 56A.	7-74
A2A6A20R17 thru A2A6A20R21		RESISTOR: item 38.	7-74
A2A6A20R22		RESISTOR, FIXED, COMPOSITION: 1.5k ohm ±5%, 1/4 w; MIL type RCR07G152JS.	7-74

Table 7-2. Radio Receiver R-1051H/URR, Parts List (Continued)

TRANSLATOR/SYNTHESIZER ASSEMBLY A2A6

REFERENCE DESIGNATION	NOTES	NAME AND DESCRIPTION	FIGURE NUMBER
A2A6A20R23 thru A2A6A20R27		RESISTOR: Item 38.	7-74
A2A6A20R28		RESISTOR, FIXED, COMPOSITION: 51 ohm ±5%, 1/4 w; MIL type RCR07G510JS.	7-74
A2A6A20TP1		TEST POINT, BROWN: MIL type M39024/18-03.	7-74
A2A6A20TP2		TEST POINT, RED: MIL type M39024/18-04.	7-74
A2A6A20U1A	*	INTEGRATED CIRCUIT: Mfr 04713, part no. MC12513, 98738, dwg 48P226458-01.	7-74
A2A6A20U1B		INTEGRATED CIRCUIT: Mfr 07263, part no. 11C90, or mfr 58317, part no. 8680A, 98738, dwg 48P228880-01. Note: this is alternate part to U1A; U1A is preferred.	
A2A6A20U2		INTEGRATED CIRCUIT: Mfr 04713, part no. 54F191BCXJC, 98738, dwg 48P228739-01.	7-74
A2A6A20U3		INTEGRATED CIRCUIT, PROM: Mfr 18324, part no. 82S123/883B, 98738, dwg 48P228344-01.	7-74
A2A6A20U4 and A2A6A20U5		INTEGRATED CIRCUIT: Item 76.	7-74
A2A6A20U6		INTEGRATED CIRCUIT: Mfr 01295, part no. SNJ54S168J, 98738, dwg 48P228737-01.	7-74
A2A6A20U7 and A2A6A20U8		INTEGRATED CIRCUIT, PROM: Mfr 18324, part no. 82S123/883B, 98738, dwg 48P228344-01.	7-74
A2A6A20U9 and A2A6A20U10		INTEGRATED CIRCUIT: Item 76.	7-74
A2A6A20W1		ASSEMBLY, COAXIAL: 2.25 in. long, mfr 98738, part no. 30A228383-24.	7-74
A2A6A20W2		ASSEMBLY, COAXIAL: 2.75 in. long, mfr 98738, part no. 30A228383-14.	7-74
A2A7		CODE GENERATOR ASSEMBLY: 5.14 in. long, 3.4 in. w; 1.864 in. h; mfr 98738, part no. 01A228515-01. Nonrepairable Assembly. (Attaching Parts) AB(2) M(2)	7-75
A2A8		Not used.	

Table 7-2. Radio Receover R-1051H/URR, Parts List (Continued)

ANTENNA OVERLOAD ASSEMBLY A2A9

REFERENCE DESIGNATION	NOTES	NAME AND DESCRIPTION	FIGURE NUMBER
A2A9		ANTENNA OVERLOAD ASSEMBLY: 2.05 in. long, 1.84 in. w, 98738, part no. 01A226171-21-11 (Attaching Parts) See A2MP112.	7-4B and 7-76
A2A9C1		CAPACITOR, FIXED, CERAMIC: 1000 pF ±20%, 1000 Vdc working; MIL type CK60AW102M.	7-76
A2A9C2		CAPACITOR, FIXED, CERAMIC: 0.250 in. long, 0.160 in. dia, 5.1 pF ±5%, 500 Vdc working; mfr 78488, part no. GA5-1PFPORM5PCT, 06845, dwg 4031973-0735.	7-76
A2A9C3		CAPACITOR, FIXED, CERAMIC: 0.260 in. long, 0.160 in. dia, 3 pF ±5%, 500 Vdc working; mfr 78488, part no. GA3-OPFPORM5PCT, 06845, dwg 4031973-0729.	7-76
A2A9C4		CAPACITOR, FIXED, ELECTROLYTIC: 4.7 uF ±20%, 50 Vdc working; MIL type M39003/01-2369.	7-76
A2A9CR1 and A2A9CR2		SEMICONDUCTOR DEVICE, DIODE: MIL type JAN1N4148-1.	7-76
A2A9K1		RELAY, ELECTRICAL: DPDT, 2 amp, mfr 71482, part no. HFW1201K33, 06845, dwg 4032287-0701.	7-76
A2A9Q1 and A2A9Q2		TRANSISTOR: MIL type JAN2N1613.	7-76
A2A9R1		RESISTOR, FIXED, COMPOSITION: 27k ohm ±5%, ½ w; MIL type RCR20G273JS.	7-76
A2A9R2		RESISTOR, FIXED, COMPOSITION: 39k ohm ±5%, ½ w; MIL type RCR20G393JS.	7-76
A2A9R3		RESISTOR, FIXED, COMPOSITION: 56k ohm ±5%, ¼ w; MIL type RCR07G563JS.	7-76
A2A9R4		RESISTOR, FIXED, COMPOSITION: Item 42.	7-76
A2A9R5		RESISTOR, FIXED, COMPOSITION: Item 54.	7-76
A2A9R6		RESISTOR, FIXED, COMPOSITION 27k ohm ±5%, ¼ w; MIL type RCR07G273JS.	7-76
A2A9R7		RESISTOR, FIXED, COMPOSITION: Item 42.	7-76
A2A9R8		RESISTOR, FIXED, COMPOSITION: 2700 ohm ±5%, ½ w; MIL type RCCR20G272JS.	7-76
A2A9R9		RESISTOR, FIXED, COMPOSITION: 220 ohm ±5%, ½ w; MIL type RCR20G221JS.	7-76
A2A9R10		RESISTOR, FIXED, COMPOSITION: 5,100 ohm ±5%, 2 w; MIL type RCR42G512JS.	7-76

Table 7-2. Radio Receiver R-1051H/URR, Parts List (Continued)

20-30 MHZ FILTER ASSEMBLY A2A10

REFERENCE DESIGNATION	NOTES	NAME AND DESCRIPTION	FIGURE NUMBER
A2A10		20-30 MHZ FILTER ASSEMBLY: 3.45 in. long, 1.10 in. w; mfr 98738, part no. 01A226172-21-11. (Attaching Parts) AU(2) AL(2) DT(2) AQ(2)	7-4 and 7-77
A2A10C1 and A2A10C2		CAPACITOR, FIXED, CERAMIC: Item 19.	7-77
A2A10C3A	1	CAPACITOR, FIXED, CERMAIC: 820 pF ±2%, 500 Vdc working; MIL type CMR06F821GPDM.	7-77
A2A10C3B	1	CAPACITOR, FIXED, CERAMIC: 910 pF ±2%, 500 Vdc working; MIL type CMR06F911GPDM.	7-77
A2A10C4		CAPACITOR, FIXED, CERAMIC: 390 pF ±1%, 500 Vdc working; MIL type CMR05F391FPDM.	7-77
A2A10C5 and A2A10C6		CAPACITOR, FIXED, CERAMIC: 27 pF ±2%, 500 Vdc workding; MIL type CMR05E270GPDM.	7-77
A2A10C7		CAPACITOR, FIXED, CERAMIC: Item 19.	7-77
A2A10CR1 thru A2A10CR4		SEMICONDUCTOR DEVICE, DIODE: Item 60.	7-77
A2A10CR5		SEMICONDUCTOR DEVICE, DIODE: Item 61.	7-77
A2A10L1		COIL, RF: MIL type MS75089-7.	7-77
A2A10L2		COIL, RF, VARIABLE: 0.490 in. long, 0.422 in. dia, 21.500 MHz, 822 pF ±5%; mfr 93292, part no. 500-2397, 06845, dwg 4032440-0701.	7-77
A2A10L3		COIL, RF, VARIABLE: 0.490 in. long, 0.422 in. dia, 31.100 MHz, 393 pF ±4%, mfr 93292, part no. 500-2431, 06845, dwg 4032440-0702.	7-77
A2A10L4		COIL, RF, VARIABLE: 0.490 in. long, 0.422 in. dia, 19.600 MHz, 28 pF ±4%, mfr 93292, part no. 500-2432, 06845, dwg 4032440-0703.	7-77
A2A10L5		COIL, RF, VARIABLE: 0.490 in. long, 0.422 in. dia, 29.000 MHz, 28 pF ±5%, mfr 93292, part no. 500-2398, 06845, dwg 4032440-0704.	7-77
A2A10L6		COIL, RF: MIL type MS75089-7.	7-77
A2A10R1 and A2A10R2		RESISTOR: Item 41.	7-77
A2A10R3		RESISTOR, FIXED, COMPOSITION: 470 ohm ±5%, ½ w; MIL type RCR20G471JS.	7-77
A2A11 and A2A12		Not used.	

Table 7-2. Radio Receiver R-1051H/URR, Parts List (Continued)

CONTROL ASSEMBLY A2A13

REFERENCE DESIGNATION	NOTES	NAME AND DESCRIPTION	FIGURE NUMBER
A2A13		CONTROL ASSEMBLY; 4.06 in. long, 3.50 in. w; mfr 98738, part no. 01A228810-01.	7-4S and 7-78
A2A13C1		CAPACITOR, FIXED, ELECTROLYTIC: 43 uF ±10%, 100 Vdc working; MIL type M39006/09-8390.	7-78
A2A13C2		CAPACITOR, FIXED, ELECTROLYTIC: 33 uF ±10%, 75 Vdc working; MIL type M39006/09-8364.	7-78
A2A13C3		CAPACITOR, FIXED, ELECTROLYTIC: 120 uF +75% to -15%, 40 Vdc working; 0.858 in. long, 0.375 in. dia; mfr 26769, part no. T0314, 06845, dwg 4031980-0701.	7-78
A2A13CR1 thru A2A13CR7		SEMICONDUCTOR DEVICE, DIODE: MIL type JAN1N649-1.	7-78
A2A13CR8 thru A2A13CR11		SEMICONDUCTOR DEVICE, DIODE: MIL type JAN1N645.	7-78
A2A13CR12 and A2A13CR13		SEMICONDUCTOR DEVICE, DIODE: MIL type JAN1N3024B.	7-78
A2A13J1		CONNECTOR, ELECTRICAL: MIL type M24308/24-27.	7-78
A2A13K1 and A2A13K2		RELAY, DPDT 2 AMP: 1.266 in. long, 0.800 in. w, 0.400 thk, 675 ohm ±10%, 26.5 Vdc working, MIL type M5757/10-056.	7-78
A2A13MP1	2	RETAINER, SLIDE LOCK: 2.260 in. long, 0.500 in. w, 0.144 in. thk; mfr 71468, part no. DB51221-1, 98738, dwg. 01P228683-03.	7-78
A2A13R1 and A2A13R2		RESISTOR, FIXED, COMPOSITION: 91 ohm ±5%, 1 w; MIL type RCR32G910JS.	7-78
A2A13R3		RESISTOR: Item 37.	7-78
A2A13R4		RESISTOR, FIXED, COMPOSITION: 1k ohm ±5%, ½ w; MIL type RCR20G102JS.	7-78
A2A13R5		RESISTOR, VARIABLE, NON WIRE-WOUND: 500 ohm ±3%, ½ w; MIL type RJR24CX501M.	7-78
A2A13R6		RESISTOR, FIXED, COMPOSITION: 1500 ohm ±5%, ½ w; MIL type RCR20G152JS.	7-78

Table 7-2. Radio Receiver R-1051H/URR, Parts List (Continued)

FRONT PANEL ASSEMBLY A2A14

REFERENCE DESIGNATION	NOTES	NAME AND DESCRIPTION	FIGURE NUMBER
A2A14		PANEL, FRONT, ASSEMBLY: Mfr 98738, part no. 01A229007-01. (Attaching Parts) H(3) M(3) BN(3) FG(4)	7-79
A2A14CR1 thru A2A14CR4		Not used.	
A2A14CR5		SEMICONDUCTOR DEVICE, DIODE: MIL type JAN1N5711.	7-79
A2A14CR6 and A2A14CR7		Not used.	
A2A14CR8		SEMICONDUCTOR DEVICE, DIODE: Item 60.	7-79
A2A14DS1 and A2A14DS2		Not used.	
A2A14DS3 and A2A14DS4		LAMP, INCANDESCENT: MIL type MS25237-387.	7-79
A2A14DS5		LAMP, NEON: MIL type MS25252-C9A.	7-79
A2A14E1 and A2A14E2		TERMINAL, STUD: Item 63. (Attaching Parts) AA(1)	7-79
A2A14E3		TERMINAL, STUD: Item 62. (Attaching Parts) AA(1)	7-79
A2A14E4 thru A2A14E7		TERMINAL, STUD: Item 63. (Attaching Parts) AA(4)	7-79
A2A14E8		TERMINAL, STUD: Item 62. (Attaching Parts) AA(1)	7-79
A2A14E9		Not used.	
A2A14E10		TERMINAL, STUD: Item 62. (Attaching Parts) AA(1)	7-79
A2A14E11		Not used.	
A2A14E12		TERMINAL, STUD: Item 62. (Attaching Parts) AA(1) AQ(1)	7-79
A2A14E13		Not used.	
A2A14E14		TERMINAL, STUD: Item 63. (Attaching Parts) AA(1)	7-79
A2A14F1 and A2A14F2		FUSE, ELECTRICAL: 3/4 amp, MIL type F02B250V3/4AS.	7-79
A2A14J1 and A2A14J2		JACK, TIP: MIL type M641/12-1. (Attaching Parts) AH(1) ea, A2MP68 and A2MP69	7-79
A2A14J3		CONNECTOR, RECEPTACLE, ELECTRICAL: MIL type M21097/21-019. (Attaching Parts) AA(2) AG(2)	7-79
A2A14J4		CONNECTOR, RECEPTACLE, ELECTRICAL: MIL type M24308/1-4.	7-79

Table 7-2. Radio Receiver R-1051H/URR, Parts List (Continued)

FRONT PANEL ASSEMBLY A2A14

REFERENCE DESIGNATION	NOTES	NAME AND DESCRIPTION	FIGURE NUMBER
A2A14M1		METER, ELECTRICAL, dB SCALE: Mfr 98738, part no. 72P228029-01. (Attaching Parts) DA(4) EQ(4)	7-79
A2A14MP1 and A2A14MP2		KNOB ASSEMBLY: Plastic, 1.500 in. dia, 1.090 in. thk; mfr 06845, part no. 2068802-0501. (Attaching Parts) BC(1) DM(1) FP(1)	7-79
A2A14MP3 thru A2A14MP5		KNOB ASSEMBLY: Plastic, 1.500 in. dia, 1.090 in. thk; mfr 06845, part no. 2058802-0502 (Attaching Parts) BC(1) DW(1) DM(1)	7-79
A2A14MP6 thru A2A14MP9		KNOB, CONTROL: MIL type MS91528-0D3B.	7-79
A2A14MP10		KNOB ASSEMBLY: Mfr 06845, part no. 4032100-0501. (Attaching Parts) BG(2) ED(1) EB(1)	7-79
A2A14MP11		KNOB, CONTROL: MIL type MS91528-1K2B. (Attaching Parts) BD(2) EB(1)	7-79
A2A14MP12 and A2A14MP13		DIAL, SCALE: 2.55 in. dia, mfr 98738, part no. 34A226785-21-11 (Attaching Parts) BH(1) BD(1)	7-79
A2A14MP14 thru A2A12MP18		SCREW, CAPTIVE: No. 10-32 UNC-2A x 0.980 in. long; mfr 06845, part no. 4030574-0001.	7-79
A2A14MP19		SCREW, PANEL: No. 10-32 UNC-2A x 1.07 in. long with plastic cap; mfr 06845, part no. 4032255-0501.	7-79
A2A14MP20		KNOB, CONTROL: MIL type M25049/1-138.	7-79
A2A14MP21		RETAINER, SLIDE LOCK: 2,908 in. long, 0.500 in. w, 0.144 in. thk; mfr 71468, part no. DC51222-1, 98738, dwg 01P228683-04.	7-79
A2A14MP22 and A2A14MP23		Not used.	
A2A14MP24 and A2A14MP25		SPRING, DETENT: Mfr 06845, part no. 4032225-0501. (Attaching Parts) K(2) L(1) M(2)	7-79
A2A14MP26 and A2A14MP27		PIN, ROLLER: 0.1562 in. dia, 0.40 in. long; mfr 06845, part no. 4032132-0001.	7-79
A2A14MP28 and A2A14MP29		BEARING, NEEDLE: 0.28 in. OD, 0.16 in. ID, 0.25 in. thk; mfr 60380, part no. B21-24, 06845, dwg 4032157-0702.	7-79
A2A14MP30 thru A2A14MP32		GEAR SET: Bevel, matched-32 teeth; mfr 00141, part no. 0090-1, 06845, dwg 4030781-0701.	7-79

Table 7-2. Radio Receiver R-1051H/URR, Parts List (Continued

FRONT PANEL ASSEMBLY A2A14

REFERENCE DESIGNATION	NOTES	NAME AND DESCRIPTION	FIGURE NUMBER
A2A14MP33 thru A2A14MP35		SPROCKET WHEEL: 1.463 in. dia, 0.269 in. thk; mfr 06845, part no. 4030778-0702. (Attaching Parts) FQ(1) BE(1)	7-79
A2A14MP36 thru A2A14MP38		SHAFT, SUPPORT, BRACKET, GEAR: 0.1874 in. dia, 2.062 in. long; mfr 06845, part no. 4030873-0001.	7-79
A2A14MP39 and A2A14MP40		Not used.	
A2A14MP41		1 kHz DETENT ASSEMBLY: 1.25 in. dia, 0.318 in. thk, shaft 1.554 in. long; mfr 06845, part no. 4032354-0701. (Attaching Parts) BB(1) BC(1)	7-79
A2A14MP42 and A2A14MP43		10 kHz AND 100 kHz SHAFT ASSEMBLY: 0.625 in. hex, 0.218 in. thk, shaft, 2.296 in. long; mfr 76854, part no.. 4-8145-633, 98738, dwg 43P227255-21-12.	7-79
A2A14MP44 thru A2A14MP46		DIAL: Cellulose acetate butyrate, 2.55 in. dia, 0.804 in. thk; mfr 98738 part no. 34P228549-01. (Attaching Parts) BD(2)	7-79
A2A14MP47 thru A2A14MP49		BEARING, BALL, ANNULAR: 0.422 in. OD, 0.1875 in. ID, 0.125 in. thk; SST; mfr 40920, part no. B972, 06845, dwg 4018589-0701.	7-79
A2A14MP50 thru A2A14MP55		BEARING, SLEEVE: 0.460 in. dia, 0.140 in. thk, mfr 06845, part no. 2031154-0002.	7-79
A2A14MP56		PLATE: 0.912 in. long, 0.624 in. w, 0.094 in. thk; mfr 06845, part no. 4013364-0001. (Attaching Parts) BC(1) DM(1)	7-79
A2A14MP57		PLATE: 0.960 in. long, 0.531 in. w, 0.094 in. thk; mfr 06845, part no. 4013365-0001. (Attaching Parts) BC(1) DM(1)	7-79
A2A14MP58		LENS: MIL type LC13YN2.	7-79
A2A14MP59		PANEL, LIGHT: 12.44 in. long, 0.860 in. w, 0.150 in. thk; mfr 06845, part no. 40100004-0001.	7-79
A2A14MP60		KNOB, CONTROL: 1.525 in. OD, 0.900 in. ID, 1.010 in. thk; mfr 06845, part no. 2058804-0001. (Attaching Parts) BL(2) A(2)	7-79
A2A14MP61		KNOB: Plastic, 2.06 in. dia, 0.38 in. thk; mfr 98738, part no. 36P227275-01. (Attaching Parts) BK(2)	7-79
A2A14MP62 and A2A14MP63		SPACER, SPROCKET: 0.500 in. OD, 0.1875 in. ID, 0.080 in. thk; mfr 06845, part no. 4030866-0001.	7-79
A2A14MP64		SPACER, SPROCKET: 0.600 in. OD, 0.1875 in. ID, 0.144 in. thk; mfr 06845, part no. 4030866-0002.	7-79

Table 7-2. Radio Receiver R-1051H/URR, Parts List (Continued)

FRONT PANEL ASSEMBLY A2A14

REFERENCE DESIGNATION	NOTES	NAME AND DESCRIPTION	FIGURE NUMBER
A2A14MP65		Not used.	
A2A14MP66 and A2A14MP67		BUSHING: Bronze cadmium, 0.688 in. OD, 0.2502 in. ID, 2.500 in. long; mfr 06845, part no. 2058974-0001. (Attaching Parts) FR(1)	7-79
A2A14MP68 and A2A14MP69		COVER, ELECTRICAL, CONNECTOR: Gray enamel, 1.125 in. long, 0.88 in. w, 0.440 in. thk; mfr 82389, part no. 520, 06845, dwg 4031933-0701.	7-79
A2A14MP70 and A2A14MP71		Not used.	
A2A14MP72 and A2A14MP73		BOOT, SEAL: MIL type M5423/09-02.	7-79
A2A14MP74 and A2A14MP75		WHEEL, INDEX: 1.188 in. dia, 1.31 in. long; mfr 06845, part no. 4013394-0001.	7-79
A2A14MP76		Not used.	
A2A14MP77 thru A2A14MP79		SPACER: 0.250 in. hex, 0.544 in. long; mfr 98738, part no. 43P228463-01.	7-79
A2A14MP80 thru A2A14MP85		SPACER: 0.312 in.hex, 0.714 in. long; mfr 98738, part no. 43P228463-02.	7-79
A2A14MP86		BRACKET, SUPPORT: 8.640 in. long, 1.580 in. w, 1.175 in. d; mfr 06845, part no. 4032360-0501. (Attaching Parts) B(6) H(1) BM(3) BN(3) BR*(6) BQ*(3) BP*(6) * Quantities may vary.	7-79
A2A14MP87 and A2A14MP88		CLAMP: 1.28 in. long, 0.88 in. w, 0.190 in. dia; mfr 06845, part no. 4010007-0001. (Attaching Parts) K(1) M(1)	7-79
A2A14MP89 and A2A14MP90		SPACER: 0.250 in. dia, 0.190 in. long; mfr 06845, part no. 4010020-0001.	7-79
A2A14MP91 thru A2A14MP122		Not used.	
A2A14MP123		GASKET, FORMED: Synthetic rubber, 13.75 in. dia, 0.140 in. thk; 06845, part no. 4032199-0001.	7-79
A2A14MP124 thru A2A14MP128		WINDOW, DIAL: Acrylic plaster sheet, 0.30 in. thk, 0.740 in. dia; mfr 06845, part no. 4030630-0001.	7-79

Table 7-2. Radio Receiver R-1051H/URR, Parts List (Continued)

FRONT PANEL ASSEMBLY A2A14

REFERENCE DESIGNATION	NOTES	NAME AND DESCRIPTION	FIGURE NUMBER
A2A14MP129 thru A2A14MP133		CLIP, WINDOW: 0.75 in. long, 0.72 in. w; mfr 06845, part no. 4032105-0001. (Attaching Parts) AG(2) AL(2)	7-79
A2A14MP134 and A2A14MP135		HANDLE: Aluminum alloy, 0.312 in. dia, 4.874 in. long, 1.500 in. dia; mfr 00328, part no. S041-19, dwg 4032156-0701. (Attaching Parts) BV(2)	7-79
A2A14MP136 thru A2A14MP139		FERRULE: Aluminum alloy, 0.312 in. thk, 0.750 in. dia; mfr 00328, part no. S044-3, dwg 4032156-0702.	7-79
A2A14MP140 thru A2A14MP150		Not used.	
A2A14MP151 thru A2A14MP154		SHIM, SOLID, METALLIC; CRES, 026 in. OD, x 14 X 32; mfr 06845, part no. 2074903-3405, -6.	7-79
A2A14MP155		BRACKET, AUDIO LEVEL SWITCH; Aluminum alloy; 2.02 in. long, 1.26 in. w; mfr 98738, part no. 07P228837-01. (Upon which A2A12 is fastened.) (Attaching Parts) AG(2) AL(2)	7-79
A2A14P1 and A2A14P2		CONNECTOR, PLUG, ELECTRICAL: MIL type M24308/3-5.	7-79
A2A14R1 and A2A14R2		RESISTOR, VARIABLE, COMPOSITION: 1k ohm ±10%, 2 w; MIL type RV6TAYSA102C.	7-79
A2A14R3		RESISTOR, VARIABLE, COMPOSITION: 1k ohm ±20%, 2 w; MIL tpe RV6SAYSD102A.	7-79
A2A14R4 and A2A14R5		RESISTOR, VARIABLE, COMPOSITION: 2.5k ohm ±10%, 2 w; MIL type RV6SAYFD252C.	7-79
A2A14R6		RESISTOR, VARIABLE, COMPOSITION: 25k ohm ±20%, 2 w; MIL type RV6SAYSD253A.	7-79
A2A14R7 and A2A14R8		Not used.	
A2A14R9 and A2A14R10		RESISTOR: Item 41.	7-79
A2A14R11 thru A2A14R13		Not used.	
A2A14R14		RESISTOR, FIXED, FILM: 430 ohm ±2%, ¼ w; MIL type RCR07G431JS.	7-79
A2A14R15 thru A2A14R18		Not used.	
A2A14R19		RESISTOR: Item 43.	7-79
A2A14R20 thru A2A14R24		Not used.	

Table 7-2. Radio Receiver R-1051H/URR, Parts List (Continued)

FRONT PANEL ASSEMBLY A2A14

REFERENCE DESIGNATION	NOTES	NAME AND DESCRIPTION	FIGURE NUMBER
A2A14R25		RESISTOR, FIXED, FILM: 510 ohm ±5%, ¼ w; MIL type RCR07G511JS.	7-79
A2A14S1		Not used.	
A2A14S2		SWITCH ASSEMBLY: Mfr 98738, part no. 01A228676-01.	7-79
A2A14S3		AGC GATE CONTROL SWITCH, ROTARY: 1 section, 3 position, 1.438 in. dia, 0.375 in. long; mfr 76854, part no. 5-21342-211, 06845, dwg 4010003-0701.	7-79
A2A14XDS1 and A2A14XDS2		Not used.	
A2A14XDS3 and A2A14XDS4		LIGHT, PANEL: 25 Vdc, 1.125 in. long, 0.641 in. dia; mfr 06845, part no. 4032385-0701.	7-79
A2A14XDS5		LAMPHOLDER: MIL type LH74/2.	7-79
A2A14XF1 and A2A14XF2		FUSEHOLDER: MIL type FHL17G1.	7-79

Table 7-2. Radio Receiver R-1051H/URR, Parts List (Continued)

VERNIER SWITCH SUBASSEMBLY A2A14A11

REFERENCE DESIGNATION	NOTES	NAME AND DESCRIPTION	FIGURE NUMBER
A2A14A11		SWITCH, VERNIER, ASSEMBLY: Mfr 98738, part no. 01A228814-01. (Attaching Parts) DM(1) BC(1) DW(1)	7-79 and 7-80
A2A14A11MP1		PLATE, SWITCH 1.625 in. long, 1.50 in. w, 0.060 in. thk; aluminum alloy 5052; mfr 98738, part no 64P228815-01.	7-80
A2A14A11R1		RESISTOR, VARIABLE, NON-WIRE-WOUND: 2.375 in. long, 1.062 in. dia; 25k ohm ±5%, 2 w; mfr 32997; part no. 386C762-253H, 98738, dwg 18P226772-01.	7-80
A2A14A11S1		SWITCH, ROTARY: 1.404 in. long, 1.531 in. dia; mfr 76854, part no. 5-26313-210, 06845, dwg 4010008-0701. (Attaching Parts) AL(2)	7-80
A2A14A11A1		CIRCUIT CARD ASSEMBLY: 2.281 in. long, 1.50 in. w; mfr 98738, part no. 01A228705-01. (Attaching Parts) AF(2) AL(2) AU(2)	7-7 and 7-81
A2A14A11-A1C1		CAPACITOR: Item 13.	7-81
A2A14A11-A1C2		CAPACITOR: Item 15.	7-81
A2A14A11-A1C3		Not used.	
A2A14A11-A1C4		CAPACITOR, FIXED, MYLAR DIELECTRIC: 0.55 in. long, 0.36 in. w, 0.23 in. thk; 0.2 uF ±20%; mfr 99515, part no. EP36D4, 06845, dwg 4032429-0704.	7-81
A2A14A11-A1CR1		SEMICONDUCTOR DEVICE, DIODE: MIL type JAN1N3824A.	7-81
A2A14A11-A1CR2		SEMICONDUCTOR DEVICE, DIODE: MIL type JAN1N746A.	7-81
A2A14A11-A1R1		RESISTOR, FIXED, FILM: 30k ohm ±2%, ¼ w; MIL type RLR07C3002GR.	7-81
A2A14A11-A1R2		RESISTOR, VARIABLE, WIRE-WOUND: 5k ohm, 3/4 w; MIL type M39015/2-006PM.	7-81
A2A14A11-A1R3		RESISTOR, FIXED, FILM: 5100 ohm ±2%, ¼ w; MIL type RLR07C5101GR.	7-81
A2A14A11-A1R4		RESISTOR, FIXED, COMPOSITION: 1k ohm ±5%, ½ w; MIL type RCR20G102JS.	7-81
A2A14A11-A1R5		Not used.	
A2A14A11-A1R6		RESISTOR, FIXED, FILM: 20k ohm ±2%, ½ w; MIL type RLR20C2002GR.	7-81
A2A14A11-A1R7		RESISTOR, FIXED, COMPOSITION: 4.7 megohm ±5%, ½ w; MIL type RCR20G475JS.	7-81

Table 7-2. Radio Receiver R-1051H/URR, Parts List (Continued)

METER DRIVER SUBASSEMBLY A2A14A12

REFERENCE DESIGNATION	NOTES	NAME AND DESCRIPTION	FIGURE NUMBER
A2A14A12		METER DRIVER ASSEMBLY: Mfr 98738, dwg 01A228745-01. (Attached to A2MP155). (Attaching Parts) AF(2) AU(2)	7-82
A2A14A12C1		CAPACITOR, FIXED, ELECTROLYTIC: 2.2 uF ±10%, 20 Vdc working; MIL type M39003/01-2283.	7-82
A2A14A12C2 and A2A14A12C3		CAPACITOR: Item 19.	7-82
A2A14A12CR1 thru A2A14A12CR4		SEMICONDUCTOR DEVICE, DIODE: MIL type JAN1N4148-1.	7-82
A2A14A12CR5		SEMICONDUCTOR DEVICE, ZENER DIODE: MIL type IN758A-1.	7-82
A2A14A12R1		RESISTOR: Item 38.	7-82
A2A14A12R2		RESISTOR, FIXED, WIRE-WOUND: 54.9 k ohm, ±1%, 1/8 w; MIL type RNC50H5492FM.	7-82
A2A14A12R3		RESISTOR, FIXED, WIRE-WOUND: 6040 ohm, ±1%, 1/8 w; MIL type RNC50H6041FM.	7-82
A2A14A12R4		RESISTOR, FIXED, WIRE-WOUND: 590 ohm, ±1%, 1/8 w; MIL type RNC50H5900FM.	7-82
A2A14A12R5		RESISTOR, FIXED, WIRE-WOUND: 274 ohm, ±1%, 1/8 w; MIL type RNC50H2740FM.	7-82
A2A14A12R6		Not used.	
A2A14A12R7 thru A2A14A12R14		RESISTOR, FIXED, WIRE-WOUND: 10 k ohm, ±1%, 1/8 w; MIL type RNC50H1002FM.	7-82
A2A14A12S1		SWITCH, ROTARY: 1.884 in. long, 0.687 in. dia; mfr 81073, part no. 71BSF36-03-1-10N-C, 98738, dwg 40P228039-01.	7-82
A2A14A12U1		INTEGRATED CIRCUIT: MIL type M38510/11003BCX.	7-82

Table 7-2. Radio Receiver R-1051H/URR, Parts List (Continued)

CONNECTOR KIT, MATING

REFERENCE DESIGNATION	NOTES	NAME AND DESCRIPTION	FIGURE NUMBER
2		CONNECTOR KIT, MATING: Mfr 98738, part no. 78A226005-21-11.	7-83
2MP1 and 2MP2		BOOT, STRAIN RELIEF, HEAT SHRINKABLE: 2.16 in. long, 1.12 in. dia; mfr 08796, part no. 202A132-03, 06845, dwg 4032585-0701.	7-83
2MP3		CLAMP, CABLE: MIL type MS3057-8A.	7-83
2P1 and 2P2		Not used.	
2P3		CONNECTOR, PLUG, ELECTRICAL: MIL type MS3106A16S-5S.	7-83
2P4		CONNECTOR, PLUG, ELECTRICAL: MIL type MS3116F14-12S.	7-83
2P5 and 2P6		CONNECTOR, RECEPTACLE, ELECTRICAL: MIL type MS3106A10SL-4S.	7-83
2P7 thru 2P22		Not used.	
2P23		CONNECTOR, RECEPTACLE, ELECTRICAL: MIL type M39012/01-0005.	7-83
2P24		CONNECTOR, PLUG, ELECTRICAL: MIL type M39012/16-0101.	7-83
2P25		CONNECTOR, RECEPTACLE, ELECTRICAL: MIL type M39012/01-0005.	7-83

Table 7-2. Radio Receiver R-1051H/URR, Parts List (Continued)

BASE, SHOCK MOUNT MT-3114A/UR

REFERENCE DESIGNATION	NOTES	NAME AND DESCRIPTION	FIGURE NUMBER
3		BASE, SHOCK MOUNT MT-3114A/UR: 19.687 in. long, 16.625 in. w, 3.589 in. h; mfr 98738, part no. 01A228746-01.	7-84
3MP1		PLATE B (BOTTOM): 19.687 in. long, 16.25 in. w, 0.059 in. thk; mfr 98738, part no. 64P228726-01.	7-84
3MP2		PLATE A (TOP): 19.687 in. long, 16.25 in. w, 0.059 in. thk; mfr 98738, part no. 64P228727-01.	7-84
3MP3 thru 3MP5		ISOLATOR: 4.062 in. long, 4.062 in. w, 3.156 in. h; mfr 98728, part no. 75P228728-01.	7-84
3MP6		ISOLATOR: 4.062 in. long, 4.062 in. w, 3.156 in. h; mfr 98738, part no. 75P228728-02. (Attaching Parts)	7-84
3MP7 and 3MP8	2	CAPTIVE STRAP: 7.40 in. long, 1.40 in. w, 0.0253 in. thk; mfr 98738, part no. 64P228729-01.	7-84
3MP9 and 3MP10	2	CAPTIVE STRAP, BRAID: 7.40 in. long, 0.75 in. w, 0.040 in. thk; mfr 98738, part no. 64P228730-01.	7-84
3MP11 thru 3MP14	2	CLIP, STRAP, GROUND: 0.76 in. long, 0.75 in. w, 0.05 in. thk; mfr 98738, part no. 64P228731-01.	7-84
3MP15		BRACKET, MOUNTING, LEFT: 14.22 in. long, 6.62 in. h, 1.06 in. d; aluminum alloy; 0.125 in. thk; mfr 98738, part no. 07P226206-21-11.	7-84
3MP16		BRACKET, MOUNTING, RIGHT: 14.22 in. long, 6.62 in. h, 1.06 in. d; 0.125 in. thk; mfr 98738, part no. 07P226206-22-11.	7-84

Table 7-3. List of Common Item Descriptions

ITEM NUMBER	DESCRIPTION
1	BLOCK, CONTACT: Molded diallyl phthalate, 16 silver alloy contacts; 3.659 in. long, 0.520 in. w, mfr 98738, part no. 39P228459-01.
2	CAPACITOR, FIXED, MICJA: 130 pF, ±2%, 500 Vdc working, MIL type CMR05F131GPDM.
3	CAPACITOR, FIXED, MICA: 150 pF, ±1%, 500 Vdc working; MIL type CMR05F151FPDM.
4	CAPACITOR, FIXED, MICA: 820 pF, ±5%, 500 Vdc working; MIL type CMR06F821JPDM.
5	CAPACITOR, FIXED, MICA: 140 pF, ±2%, 300 Vdc working; 0.45 in. long, 0.358 in. w, 0.172 in. thk; mfr 06845, part no. 4030786-0704.
6	CAPACITOR, FIXED, MICA: 96 pF, ±1%, 500 Vdc working; 0.460 in. long, 0.360 in. w, 0.180 in. thk; mfr 06845, part no. 4031978-0737.
7	CAPACITOR, FIXED, MYLAR DIELECTRIC: 0.05 uF, ±20%, 100 Vdc working; 0.500 in long, 0.222 in. dia; mfr 99515, part no. EP36D2, 06845, dwg 4032429-0702.
7A	CAPACITOR, FIXED, MYLAR DIELECTRIC: 0.1 uF, ±20%, 100 Vdc working; 0.42 in. long, 0.29 in. w, 0.17 in. h; mfr 99515, part no. EP36D-3, 06845, dwg 4032429-0703.
8	CAPACITOR, FIXED, MYLAR DIELECTRIC: 1.0 uF ±20%, 75 Vdc working; MIL type M39003/01-2400.
9	CAPACITOR, FIXED, CERAMIC: 1.5 pF, ±5%, 500 Vdc working; 0.330 in. long, 0.160 in. dia, mfr 78488, part no. GA1-5PFPORM5PCT, 06845, dwg 4031973-0722.
10	CAPACITOR, FIXED, CERAMIC: 2.0 pF, ±5%, 500 Vdc working; 0.290 in. long, 0.160 in. dia, mfr 78488, part no. GA2-OPFPORM5PCT, 05834, dwg 4031973-0725.
11	CAPACITOR, FIXED, ELECTROLYTIC: 10 uF, ±10%, 200 Vdc working; MIL type M39003/01-2286.
12	CAPACITOR, FIXED, ELECTROLYTIC: 6.8 uF, ±20%, 35 Vdc working; MIL type M39003/01-2305.
13	CAPACITOR, FIXED, ELECTROLYTIC: 1 uF, ±20%, 50 Vdc working; MIL type M39003/01-2357.
14	CAPACITOR, FIXED, CERAMIC: 1000 pF, ±20%, 200 Vdc working; MIL type M39014/01-1238.
15	CAPACITOR, FIXED, CERAMIC: 0.01 uF, ±10%, 100 Vdc working; MIL type M39014/01-1455.
16	CAPACITOR, FIXED, CERAMIC: 0.01 uF, ±10, 200 Vdc working; MIL type M39014/02-1218.
17	CAPACITOR, FIXED, CERAMIC: 0.01 uF, ±20%, 200 Vdc working; MIL type M39014/02-1219.
18	CAPACITOR, FIXED, CERAMIC: 0.047 uF, ±10%, 100 Vdc working; MIL type M39014/02-1225.
19	CAPACITOR, FIXED, CERAMIC: 0.1 uF, ±10%, 100 Vdc working; MIL type M39014/02-1230.
20	CONNECTOR, ELECTRICAL, TEST-POINT TYPE: 1500 Vrms 60 Hz; MIL type M39024/11-01.

Table 7-3. List of Common Item Descriptions (Continued)

ITEM NUMBER	DESCRIPTION
20A	CAPACITOR, FIXED, CERAMIC: 0.1 uF, ±10%, MIL type M39014/02-1310.
21	CONNECTOR, ELECTRICAL, TEST-POINT TYPE: 1000 Vrms maximum; MIL type M39024/18-03.
22	CONNECTOR, ELECTRICAL, TEST-POINT TYPE: 1000 Vrms maximum; MIL type M39024/18-04.
23	CONNECTOR, ELECTRICAL, TEST-POINT TYPE: 1000 Vrms maximum; MIL type M39024/18-05.
24	CONNECTOR, RECEPTACLE, ELECTRICAL: Mfr 71785, part no. DM53642-5001, 98738, dwg 09P226565-18.
25	CONNECTOR, PLUG, ELECTRICAL: Mfr 71785, part no. DM53740-5001, 98738, dwg 09P226565-17.
26	CONNECTOR, RECEPTACLE, ELECTRICAL: Right angle coaxial; 0.734 in. long, female contact; mfr 71785, part no. DM53743-5001, 98738, dwg 09P226565-20.
27	CONNECTOR, PLUG, ELECTRICAL: Right angle coaxial, 0.734 in. long, female contact; mfr 71785, part no. 318-11-99-283, 06845, dwg 4032484-0729.
28	EJECTOR, CIRCUIT CARD: 1.25 in. long, 0.28 in. w, 0.56 in. h; nylon; mfr 13103, part no. 5005-08N, 98738, dwg 55P226279-21-11.
29	RESISTOR, FIXED, COMPOSITION: 100 ohm ±5%, 1/8 w; MIL type RCR05G101JS.
30	RESISTOR, FIXED, COMPOSITION: 1000 ohm ±5%, 1/8 w; MIL type RCR05G102JS.
31	RESISTOR, FIXED, COMPOSITION: 10K ohm ±5%, 1/8 w; MIL type RCR05G103JS.
32	RESISTOR, FIXED, COMPOSITION: 2,400 ohm ±5%, 1/8 w; MIL type RCR05G242JS.
33	RESISTOR, FIXED, COMPOSITION: 510 ohm ±5%, 1/8 w; MIL type RCR05G511JS.
34	RESISTOR, FIXED, COMPOSITION: 5100 ohm ±5%, 1/8 w; MIL type RCR05G512JS.
35	RESISTOR, FIXED, COMPOSITIOIN: 820 ohm ±5%, 1/4 w; MIL type RCR07G821JS.
36	RESISTOR, FIXED, COMPOSITION: 10 ohm ±5%, 1/4 w; MIL type RCR07G100JS.
37	RESISTOR, FIXED, COMPOSITION: 100 ohm ±5%, 1/4 w; MIL type RCR07G101JS.
38	RESISTOR, FIXED, COMPOSITION: 1000 ohm ±5%, 1/4 w; MIL type RCR07G102JS.
39	RESISTOR, FIXED, COMPOSITION: 10K ohm ±5%, 1/4 w; MIL type RCR07G103JS.
40	RESISTOR, FIXED, COMPOSITION: 120 ohm ±5%, 1/4 w; MIL type RCR07G121JS.
41	RESISTOR, FIXED, COMPOSITION: 1,200 ohm ±5%, 1/4 w; MIL type RCR07G122JS.

Table 7-3. List of Common Item Descriptions (Continued)

ITEM NUMBER	DESCRIPTION
42	RESISTOR, FIXED, COMPOSITION: 12k ohm ±5%, 1/4 w; MIL type RCR07G123JS.
43	RESISTOR, FIXED, COMPOSITION: 15k ohm ±5%, 1/4 w; MIL type RCR07G153JS.
44	RESISTOR, FIXED, COMPOSITION: 22 ohm ±5%, 1/4w; MIL type RCR07G220JS.
45	RESISTOR, FIXED, COMPOSITION: 220 ohm ±5%, 1/4 w; MIL type RCR07G221JS.
46	RESISTOR, FIXED, COMPOSITION: 2,200 ohm ±5%, 1/4 w; MIL type RCR07G222JS.
47	RESISTOR, FIXED, COMPOSITION: 2,700 ohm ±5% 1/4 w; MIL type RCR07G272JS.
48	RESISTOR, FIXED, COMPOSITION: 330 ohm ±5%, 1/4 w; MIL type RCR07G331JS.
49	RESISTOR, FIXED, COMPOSITION: 3,300 ohm ±5%, 1/4 w; MIL type RCR07G332JS.
50	RESISTOR, FIXED, COMPOSITION: 27 ohm ±5%, 1/4 w; MIL type RCR07G270JS.
51	RESISTOR, FIXED, COMPOSITION: 33 ohm ±5%, 1/4 w; MIL type RCR07G330JS.
52	RESISTOR, FIXED, COMPOSITION: 390 ohm ±5%, 1/4 w; MIL type RCR07G391JS.
53	RESISTOR, FIXED, COMPOSITION: 47 ohm ±5%, 1/4 w; MIL type RCR07G470JS.
54	RESISTOR, FIXED, COMPOSITION: 470 ohm ±5%, 1/4 w; MIL type RCR07G471JS.
55	RESISTOR, FIXED, COMPOSITION: 4,700 ohm ±5%, 1/4 w; MIL type RCR07G472JS.
56	RESISTOR, FIXED, COMPOSITIION: 47k ohm ±5%, 1/4 w; MIL type RCR07G473JS.
56A	RESISTOR, FIXED, COMPOSITION: 5100 ohm ±5%, 1/4 w; MIL type RCR07G512JS.
57	RESISTOR, FIXED, COMPOSITION: 560 ohm ±5%, 1/4 w; MIL type RCR07G561JS.
58	RESISTOR, FIXED, FILM: 1k ohm ±2%, 1/4 w; MIL type RLR07C1001GR.
59	RESISTOR, FIXED, FILM: 51 ohm ±2%, 1/4 w; MIL type RLR07C51R0GR.
60	SEMICONDUCTOR DEVICE, DIODE: Silicon, voltage regulator; MIL type JAN1N4454.
61	SEMICONDUCTOR DEVICE, DIODE: Silicon, voltage regulator, MIL type JAN1N758A.
62	TERMINAL, STUD: MIL type SE206D01.
63	TERMINAL, STUD: 0.593 in. long, 0.050 in. dia, brass; mfr 71279, part no. 2380-1, 06845, dwg 4032159-0701.
64	TRANSISTOR, MIL type JAN2N2222A.
65	TRANSISTOR, MIL type JAN2N2905A.

Table 7-3. List of Common Item Descriptions (Continued)

ITEM NUMBER	DESCRIPTION
66	TERMINAL, STUD: 0.250 in. hex base, 0.719 in. long; mfr 71279, part no. 2381-1, 06845, dwg 4032159-0702.
67	CAPACITOR, FIXED, CERAMIC: 1000 pF ±10% 200 Vdc working; MIL type M39014/01-1317.
68	CAPACITOR, FIXED, CERAMIC: 0.047 uF ±10%, 100 Vdc working; MIL type M39014/02-1305.
69	CAPACITOR, FIXED, CERAMIC: 0.001 uF ±10%, 200 Vdc working; MIL type M39014/01-1237.
70	RESISTOR, FIXED, COMPOSITION: 27k ohm ±5%, 1/4 w; MIL type RCR07G273JS.
71	RESISTOR, FIXED, COMPOSITION: 82 ohm ±5%, 1/4 w; MIL type RCR07G820JS.
72	RESISTOR, FIXED, COMPOSITION: 33k ohm ±5%, 1/4 w; MIL type RCR07G333JS.
73	RESISTOR, FIXED, COMPOSITION: 100k ohm ±5%, 1/4 w; MIL type RCR07G104JS.
74	RESISTOR, FIXED, COMPOSITION: 3.9k ohm ±5%, 1/4 w; MIL type RCR07G392JS.
75	RESISTOR, FIXED, COMPOSITION: 8.2k ohm ±5%, 1/4 w; MIL type RCR07G822JS.
76	INTEGRATED CIRCUIT, mfr 04713, part no. 54LS168; 98738, dwg 48P228879.

Table 7-4. List of Attaching Hardware

LETTER CODE	DESCRIPTION
A	NUT, PLAIN, HEX, MACHINE SCREW: No. 8-32 UNC-2B x 0.344 across flats, 0.130 in. thk, MIL type MS35649-284.
B	WASHER, LOCK-SPRING, HELICAL: No. 8, 0.175 in. ID, 0.293 in. OD, 0.040 in. thk, MIL type MS35338-137.
C	NUT, PLAIN, HEXAGON: No. 8-32 UNC-2B x 0.250 in. across flats, 0.289 in. thk; mfr 06845, part no. 4030942-0703.
D	WASHER, FLAT, SPECIAL: 0.173 in. ID, 0.437 in. OD, 0.036 in thk; mfr 06845, part no. 4031924-0009.
E	SCREW, MACHINE, FLAT COUNTERSUNK HEAD, 82° CROSS-RECESSED, CRES: No. 2-56 UNC-2A x 3/4 in. long, MIL type MS51959-9.
F	NUT, PLAIN HEX, MACHINE SCREW: No. 2-56 UNC-2B x 0.187 across flats, 0.066 in. thk; MIL type MS35649-224.
G	WASHER, LOCK-SPRING, HELICAL: No. 2, 0.094 in. ID, 0.172 in. OD, 0.020 in. thk; MIL type MS35338-134.
H	WASHER, FLAT - METAL, ROUND; CRES: No. 10, 0.188 in ID, 0.375 in. OD, 0.049 in. thk; MIL type MS15795-807.
I	Not used.
J	SCREW, MACHINE, FLAT COUNTERSUNK HEAD, 82° CROSS-RECESSED, CRES: No. 2-56 UNC-2A x 3/8 in. long; MIL type MS51959-5.
K	NUT, PLAIN, HEX, MACHINE SCREW: No. 6-32 UNc-2B x 0.312 across flats, 0.114 in. thk; MIL type MS35649-264.
L	WASHER, FLAT - METAL ROUND, CRES: No. 10, 0.156 in. ID, 0.312 in. OD, 0.035 in. thk; MIL type MS15795-805.
M	WASHER, LOCK-SPRING, HELICAL: No. 6, 0.148 in. ID, 0.250 in. OD, 0.031 in. thk; MIL type MS35338-136.
N	SCREW, CAP, HEX HEAD, CRES: UNC-2A, 5/16 x 0.625 in. long, 0.435 in. across flats; MIL type MS35307-331.
O	Not used.
P	WASHER, FLAT - METAL, ROUND CRES: No. 10, 0.344 in ID, 0.688 in. OD, 0.065 in. thk; MIL type MS15795-812.
Q	WASHER, LOCK-SPRING, HELICAL: No. 5/16, 0.328 in. ID, 0.586 in. OD, 0.078 in. thk; MIL type MS35338-140.
R	SCREW, EXTERNALLY RELIEVED BODY: 0.391 in. long, 0.121 in. w; mfr 06845, part no. 4031920-002.
S	SCREW, MACHINE, FLAAT COUNTERSUNK HEAD, 82° CROSS-RECESSED, CRES: No. 2-56 UNC-2A, 7/16 in. long, MIL type MS51959-6.
T	NUT, SELF-LOCKING, HEXAGON: No. 2-56 UNC-3B x 0.158 in. across flats, 0.095 in. thk; mfr 06845, part no. 4031923-0701.
U	WASHER, LOCK, FLAT - INTERNAL TOOTH; No. 2, 0.095 in. ID, 0.200 in. OD, 0.015 in. thk; MIL type MS35333-69.
V	SCREW, MACHINE, FLAT, COUNTERSUNK HEAD, 82° CROSS-RECESSED, CRES: No. 10-32 UNF-2A, 1/2 in. long, MIL type MS24693-C1.

Table 7-4. List of Attaching Hardware (Continued)

LETTER CODE	DESCRIPTION
W	SCREW, MACHINE, PAN HEAD, CROSS-RECESSED, CRES: No. 8-32 UNC-2A, 7/16 in. long, MIL type MS51957-44.
X	STANDOFF, CRES: No. 8-32 UNC-2B x 3.972 in. long, 0.375 in. w, mfr 98738, part no. 43P226764-21-11.
Y	SCREW, CAPTIVE: No. 10-32 UNC-2A x 0.980 in. long; mfr 06845, part no. 4030574-0001.
Z	SCREW, PANEL: No. 10-32 UNC-2A x 1.07 in. long, with plastic cap; mfr 06845, part no. 4032255-0501.
AA	WASHER, LOCK, EXTERNAL TOOTH: No. 4, 0.115 in. ID, 0.245 in. OD, 0.015 in. thk; MIL type Ms35335-57.
AB	SCREW, MACHINE, PAN HEAD, CROSS-RECESSED, CRES: No. 6-32 UNC-2A, 5/16 in. long; MIL type MS51957-27.
AC	NUT, PLAIN, HEXAGON: No. 6-32 UNC-2B x 0.250 in. across flats, 0.095 in. thk; mfr 06845, part no. 4030942-0702.
AD	NUT, PLAIN, HEXAGON: No. 4-40 UNC-2B x 0.187 in. across flats, 0.066 in. thk; mfr 06845, part no. 4030942-0701.
AE	WASHER, LOCK, EXTERNAL TOOTH: No. 6, 0.141 in. ID, 0.305 in. OD, 0.016 in. thk; MIL type MS35335-58.
AF	SCREW, MACHINE, PAN HEAD, CROSS-RECESSED, CRES: No. 4-40 UNC-2A, 5/16 in. long; MIL type MS51957-14.
AG	NUT, PLAIN, HEX, MACHINE SCREW: No. 4-40 UNC-2B x 0.250 across flats, 0.114 in. thk; MIL type MS35649-244.
AH	WASHER, RUBBER: 0.390 in ID, 0.69 in. OD, 0.32 in. thk; mfr 06845, part no. 2058889-0008.
AI	Not used.
AJ	NUT, SELF LOCKING, HEXAGON: Mfr 06845, part no. 4031923-0702, 0.190 across flats, 0.110 in. thk.
AK	SCREW, MACHINE, FLAT COUNTERSUNK, HEAD, 82° CROSS-RECESSED, CRES: No. 4-40 UNC-2A, 3/8 in. long; MIL type MS51959-15.
AL	WASHER, LOCK - SPRING, HELICAL: No. 4, 0.121 in. ID, 0.209 in. OD, 0.025 in. thk; MIL type MS35338-135.
AM	NUT, PLAIN - HEXAGON, MACHINE SCREW: No. 10-32 UNF-2B x 0.375 in. across flats, 0.130 in. thk; MIL type MS35650-304.
AN	WASHER, LOCK - SPRING, HELICAL: No. 10, 0.202 in. ID, 0.334 in. OD, 0.047 in. thk; MIL type MS35338-138.
AO	Not used.
AP	SCREW, CAP, HEX SOCKET HEAD: No. 6-32 UNC-3A, 0.500 in. long, mfr 06845, part no. 4032180-0701.
AQ	SCREW, MACHINE, PAN HEAD, CROSS RECESSED, CRES: No. 4-40 UNC-2A x 1/4 in. long; MIL type MS51957-13.
AR	SCREW, MACHINE, PAN HEAD, CROSS-RECESSED, CRES: No. 4-40 UNC-2A x 1/2 in. long; MIL type MS51957-17.
AS	WASHER, FLAT - METAL, ROUND, CRES: No. 10, 0.125 in. ID, 0.312 in. OD, 0.032 in. thk; MIL type MS15795-804.

Table 7-4. List of Attaching Hardware (Continued)

LETTER CODE	DESCRIPTION
AT	SCREW, MACHINE, HEX HEAD: No. 4-40 UNC-2A x 0.50 in long; 0.187 in. hex; mfr 06845, part no. 4032182-0701.
AU	WASHER, FLAT - METAL, ROUND, CRES: No. 10, 0.125 in. ID, 0.250 in. OD, 0.022 in. thk; MIL type MS15795-803.
AV	WASHER, RUBBER: 0.985 in. ID, 1.48 in. OD, 0.032 in. thk; mfr 06845, part no. 2058889-0003.
AW	WASHER, RUBBER: 0.610 in. ID, 1.00 in. OD, 0.032 in. thk; mfr 06845, part no. 2058889-0001.
AX	WASHER, FLAT: 0.640 in. ID, 1.0 in. OD, 0.012 in. thk; mfr 06845, part no. 4032130-0003.
AY	WASHER, FLAT: 1.015 in. ID, 1.48 in. OD, 0.012 in. thk; mfr 06845, part no. 4032130-0004.
AZ	SPACER, MOUNTING: 0.173 in. ID, 0.220 in. OD, 0.160 in. long; mfr 06845, part no. 2058941-0001.
BA	WASHER, RUBBER: 0.32 in. ID, 1.00 in. OD, 0.032 in. thk; mfr 98738, part no. 32P226780-21-11.
BB	NUT, PLAIN, HEX, CRES: 0.564 in. across flats, 3/8-32 UNEF-2B, 0.093 in. thk; MIL type MS25082-20.
BC	WASHER, LOCK, FLAT - INTERNAL TOOTH: No. 3/8, 0.384 in. ID, 0.670 in OD, 0.032 in. thk; MIL type MS35333-76.
BD	SET SCREW, HEX SOCKET, CUP POINT, ALY. STEEL: No.4-40 UNC-3Ax 0.187 in. long; mfr 06845, part no. 2031167-0702.
BE	PIN, GROOVED: 0.066 in. dia., 0.500 in. long; MIL type MS35675-3.
BF	SET SCREW - HEX SOCKET, CUP POINT, PLAIN, CRES: UNC-3A, 0.500 in. long, 0.250 in. w. across flats; MIL type MS51021-36.
BG	SET SCREW - HEX SOCKET, CUP POINT, PLAIN, CRES: UNC-3A, 0.250 in. long; 0.125 in. across flats; MIL type MS51021-32.
BH	PIN, STRAIGHT, HEADLESS, ALY. STEEL: 0.250 in. long, 0.0784 in. OD; MIL type MS16555-9.
BI	Not used.
BJ	PIN, SPRING - TUBULAR, SLOTTED, CRES: 0.188 in. long, 0.199 in. dia, 0.182 chamber dia.,MIL type MS16562-189.
BK	SET SCREW, HEX SOCKET, CUP POINT, ALY. STEEL, PLAIN: UNC-3A x 0.250 in. long, 0.125 in. w. across flats; MIL type MS51963-22.
BL	SET SCREW, HEX SOCKET, CUP POINT, ALY. STEEL, PLAIN: UNC-3A x 0.250 in. long, 0.125 in. across flats; MIL type MS51963-11.
BM	SCREW, MACHINE, PAN HEAD, CROSS-RECESSED, CRES: No. 8-32 UNC-2A x 3/8 in. long; MIL type MS51957-43.
BN	SCREW, MACHINE, PAN HEAD, CROSS-RECESSED, CRES: No. 8-32 UNC-2A x 5/8 in. long; MIL type MS51957-46.
BO	Not used.
BP	SHIM, ALUMINUM: 0.312 in. dia, 0.012 in. thk; mfr 06845, part no. 2058976-0001.
BQ	SHIM, ALUMINUM: 0.312 in. dia, 0.020 in. thk; mfr 06845, part no. 2058976-0002.

Table 7-4. List of Attaching Hardware (Continued)

LETTER CODE	DESCRIPTION
BR	SHIM, ALUMINUM: 0.312 in. dia, 0.032 in. thk; mfr 06845, part no. 2058976-0003.
BS	SCREW, MACHINE, FLAT, COUNTERSUNK HEAD: 82° CROSS-RECESSED, CRES: No. 6-32 UNC-2A x 3/16 in. long; MIL type MS51959-25.
BT	Not used.
BU	SCREW, MACHINE, FLAT, COUNTERSUNK HEAD, 82°, CROSS-RECESSED, CRES: No. 8-32 UNC-2A x 3/8 in. long; MIL type MS51959-43.
BV	SCREW, MACHINE, SELF SEALING: 0.62 in. long, 10-32 thread; mfr 07631, part no. R1032 x 0.62, 06845, dwg 4032168-0703.
BW	WASHER, FLAT, SPECIAL: 1.0 in. long, 0.380 in. w, 0.156 in. dia, aluminum, dimpled; mfr 06845, part no. 4030896-0001.
BX	SCREW, MACHINE, FLAT, COUNTERSUNK HEAD, 100° CROSS-RECESSED, CRES: No. 6-32 UNC-2A x 1/4 in. long; MIL type MS24693-C24.
BY	SPACER, HEX: No. 6-32 UNC-2B internal threads, 0.437 in. long, 0.438 in. hex across flats, 82° countersunk x 0.188 in. dia, mfr 06845, part no. 4032128-0006.
BZ	SCREW, MACHINE, FLAT, COUNTERSUNK HEAD, 82°, CROSS-RECESSED, CRES: No. 2-56 UNC-2A x 3/8 in. long; MIL type MS51957-5.
CA	WASHER, FLAT, SPECIAL, CRES: 0.096 in. ID, 0.187 in. OD, 0.016 in. thk; mfr 06845, part no. 4031924-0003.
CB	SCREW, MACHINE, FLAT COUNTERSUNK HEAD, 82°, CROSS-RECESSED, CRES: No. 6-32 UNC-2A x 3/4 in. long MIL type MS51957-32.
CC	NUT, SELF-LOCKING, HEXAGON, CRES: 0.1380 -32 UNJC-3B 0.313 in. w. across flats, 0.161 in. ID, 0.072 in. thk; MIL type MS21044-C06.
CD	SPACER, TABULAR, CRES: 0.147 in. ID, 0.250 in. OD, 0.346 in. long, mfr 06845, part no. 4030905-0007.
CE	SCREW, CAPTIVE, CRES: 10-32 UNF-2A x 4.84 in. long; mfr 98738 part no. 03P228175-01.
CF	SCREW, MACHINE, FLAT, COUNTERSUNK HEAD, 82°, CROSS-RECESSED, CRES: No. 4-40 UNC-2A x 5/16 in. long; MIL type MS51959-14.
CG	WASHER, FLAT, SPECIAL: 0.125 in. ID, 0.250 in. OD, 0.032 in. thk; mfr 06845, part no. 4031924-0007.
CH	SPACER, TABULAR: 0.166 in. ID, 0.220 in. OD, 0.140 in. long, aluminum; mfr 06845, 4030905-0005.
CI	Not used.
CJ	SCREW, MACHINE, PAN HEAD, CROSS-RECESSED, CRES: No. 4-40 UNC-2A x 3/16 in. long; MIL type MS51957-12.
CK	Not used.
CL	PIN, SPRING, CRES: 0.438 in. long, 0.094 in. dia; MIL type MS171495.

Table 7-4. List of Attaching Hardware (Continued)

LETTER CODE	DESCRIPTION
CM	RING, RETAINING, EXTERNAL, "E", CRES: 0.0188 in. shaft dia. 0.0145 in. free dia., 0.025 in. thk; MIL type MS16633-4018.
CN	SCREW, TRUSS HEAD: No. 2-56 UNC-2A x 0.187 in. long; mfr 06845, part no. 4032431-0701.
CO	Not used.
CP	PIN, SPRING, CRES: 0.375 in. long, 0.094 in. dia; MIL type MS171494.
CQ	SCREW, MACHINE, PAN HEAD, CROSS-RECESSED, CRES: No. 4-40 UNC-2A x 3/8 in. long; MIL type MS51957-15.
CR	SCREW, MACHINE, PAN HEAD, CROSS RECESSED, CRES: No. 2-56 UNC-2A x 1/8 in. long; MIL type MS51957-1.
CS	RIVET, SOLID, COUNTERSUNK 100°, Aluminum alloy: 9/32 in. long, 3/32 in. dia; MIL type MS20426-AD3-4-5.
CT	RIVET, SOLID, UNIVERSAL HEAD, ALUMINUM ALLOY 2117: 0.375 in. long, 3/32 in. dia; MIL type MS20470AD3-6.
CU	RIVET - TUBULAR, OVAL HEAD - ALUMINUM ALLOY: 0.156 in. long, 0.061 in. body dia., 0.044in. hole dia., MIL type MS16535-23.
CV	RIVET, TUBULAR, OVAL HEAD, ALUMINUM ALLOY: 0.125 in. long, 0.061 in. body dia., 0.044 in. hole dia., MIL type MS16535-22.
CW	SCREW, MACHINE, PAN HEAD, CROSS-RECESSED, CRES: No. 4-40 UNC-2A x 7/16 in. long; MIL type MS51957-16.
CX	RIVET, TUBULAR, OVAL HEAD, NICKEL-PLATED BRASS: 0.087 in. dia.,1/8 in. long, mfr 06845, part no. 2074266-2303.
CY	RIVET, TUBULAR, OVAL HEAD, NICKET-PLATED BRASS: 0.087 in. dia., 9/64 in. long; mfr 06845, part no. 2074266-2303.
CZ	RIVET, TUBULAR, OVAL HEAD, NICKEL-PLATED BRASS: 0.087 in. dia., 27/64 in. long; mfr 06845, part no. 2074266-2322.
DA	SCREW, MACHINE, PAN HEAD, CROSS-RECESSED, CRES: No. 4-40 UNC-2A x 5/8 in. long; MIL type MS51957-18.
DB	SCREW, MACHINE, PAN HEAD, CROSS-RECESSED, CRES: No. 6-32 UNC-2A x 7/16 in. long; MIL type MS51957-29.
DC	WASHER, FLAT-METAL, ROUND, CRES: No. 10, 0.156 in. ID, 0.375 in. OD, 0.049 in. thk; MIL type MS15795-806.
DD	SCREW, MACHINE, FLAT, COUNTERSUNK HEAD, 82°, CROSS-RECESSED, CRES: No. 4-40 UNC-2A x 1/4 in. long; MIL type MS51959-13.
DE	RIVET, SOLID, COUNTERSUNK, 100°, COPPER: 3/8 in. long, 0.065 in. dia., MIL type MS20427C2-6.
DF	Not used.
DG	Not used.
DH	WASHER, FLAT - PLASTIC (NYLON): No. 4, 0.127 in. ID, 0.297 in. OD, 0.049 in. thk; MIL type MS51859-2.
DI	Not used.
DJ	SCREW, MACHINE, PAN HEAD, CROSS-RECESSED, CRES: No. 4-40 UNC-2A x 3/4 in. long; MIL type MS51957-19.

Table 7-4. List of Attaching Hardware (Continued)

LETTER CODE	DESCRIPTION
DK	WASHER, FLAT, SPECIAL: 0.120 in. ID, 0.218 in. OD, 0.015 in. thk; mfr 06845, part no. 4031924-0005.
DL	SCREW, MACHINE, FLAT, COUNTERSUNK HEAD, 100° CROSS-RECESSED, CRES: No. 4-40, UNC-2A x 3/8 in. long; MIL type MS24693-C4.
DM	NUT, PLAIN, HEX, CRES: No. 3/8-32 UNEF-2B, 0.564 in. across flats, 0.093 in. thk, MIL type MS25082-C20.
DN	WASHER, LOCK-SPRING, HELICAL: No. 8, 0.175 in. ID, 0.055 in. OD, 0.040 in. thk; MIL type MS35338-42.
DO	Not used.
DP	WASHER, ANTI-TURN: Mfr 81073, part no. 44J1111; available with switch rotary; mfr 98738, dwg 40P226296-08.
DQ	WASHER, FLAT - METAL, ROUND, CRES: No. 10, 0.094 in. ID, 0.250 in. OD, 0.020 in. thk; MIL type MS15795-802.
DR	WASHER, NON-METALLIC, FIBERGLASS: 0.250 in. OD, 0.107 in. ID, 0.015 in. thk; mfr 06845, part no. 2074908-3110.
DS	WASHER, MICA: 0.250 in. ID, 0.125 in. OD, 0.005 in. thk; mfr 98738, part no. 04P226362-01.
DT	STUD, EXTENSION, HEX: No. 4-40 UNC-2 threads, 0.93 in. long, 0.187 across flats, cres; mfr 06845, part no. 4032199-0005.
DU	RING, RETAINING, EXTERNAL, "E", CAD. STEEL PLATED: 0.250 in. shaft dia., 0.207 in. free dia., 0.025 in. thk; MIL type MS16633-1025.
DV	RING, RETAINING: 0.472 in. OD, 0.382 in. ID, 0.025 in. thk; mfr 77339, part no. TRC-820.
DW	WASHER, FLAT, SPECIAL: 0.380 in. ID, 0.080 in. OD, 0.012 in thk; mfr 06845, part no. 4031924-0015.
DX	RIVET, TUBULAR, 0.061 in. OD, 0.125 in. length, 0.017 in. thk., mfr 98738, part no. 05S111345-5.
DY	SCREW, MACHINE, PAN HEAD, CROSS-RECESSED, CRES: No. 6-32 UNC-2A x 3/8 in. long; MIL type MS51957-28.
DZ	SCREW, MACHINE, FLAT, COUNTERSUNK HEAD, 100° CROSS-RECESSED, CRES: No. 6-32 UNC-2A x 5/16 in. long; MIL type MS24693-C25.
EA	WASHER, RUBBER: 0.50 in. ID, 0.88 in. OD; mfr 06845, part no. 4010006-0001.
EB	WASHER, FLAT, SPECIAL: 0.380 in. ID, 0.680 in. OD, 0.036 in. thk; mfr 06845, part no. 4031924-0017.
EC	WASHER, KEY KNOB: 0.261 in ID, 0.480 in. OD, 0.325 in. thk; mfr 06845, part no. 4032101-0001.
ED	WASHER, KEY: 0.50 in. ID, 0.74 in. OD, 0.185 in. thk; mfr 06845, part no. 4032102-0001.
EE	RING, RETAINING, INTERNAL CRES: 0.512 in. ID, 0.560 in. OD, 0.035 in. thk; MIL type MS16625-4051.
EF	WASHER, SPRING TENSION: 0.257 in. ID, 0.510 in. OD, 0.010 in. thk; mfr 78189, part no. 3502-14-47-0544B, 06845, dwg 4032104-0701.

Table 7-4. List of Attaching Hardware (Continued)

LETTER CODE	DESCRIPTION
EG	WASHER, FLAT, SPECIAL: 0.380 in. ID, 0.680 in. OD, 0.078 in. thk; mfr 06845, part no. 4031924-0016.
EH	SCREW, MACHINE, SELF-SEALING: No. 10-32, 0.753 in. long, 0.403 in. w; mfr 97539; part no. R/1032 x .62, 06845, dwg 4032168-0703.
EI	Not used.
EJ	SCREW, MACHINE, PAN HEAD, CROSS-RECESSED, CRES: No. 6-32 UNC-2A x 1/2 in. long; MIL type MS51957-30.
EK	SCREW, MACHINE, FLAT, COUNTERSUNK HEAD, 82° CROSS-RECESSED, CRES: No. 8-32 UNJC-2A x 5/8 in. long; MIL type MS51959-46.
EL	STUD, TURNLOCK FASTENER: 3.00 in. long, 0.312 in. dia; mfr 72794, part no. F3-30, 06845, dwg 4032170-0701.
EM	WASHER, FLAT, SPECIAL: 0.173 in. ID, 0.437 in. OD, 0.036 in. thk; mfr 06845, part no. 4031924-0001.
EN	SCREW, MACHINE, FLAT, COUNTERSUNK HEAD, 82° CROSS-RECESSED: No. 2-56 UNC-2A x 1/4 in. long; MIL type MS51959-33.
EO	Not used.
EP	WASHER, LOCK, EXTERNAL TOOTH: 0.267 in. ID, 0.365 in. OD, 0.32 in. thk; mfr 06845, part no. 2074905-2305.
EQ	COIL, HELICAL, CRES: 0.112 - 40 threads, 0.168 in. long, 0.159 in. OD max; MIL type MS21209-C0415.
ER	SCREW, MACHINE, PAN HEAD, CROSS-RECESSED, CRES: No. 4-40 UNC-2A x 7/16 in. long; MIL type MS51957-16.
ES	PIN, SPRING, CRES: 0.438 in. long; MIL type MS171435.
ET	Not used.
EU	PIN, GROOVED: 0.066 in. dia, 0.375 in. long; MIL type MS35672-7.
EV	RING, RETAINING: 0.382 in. ID, 0.472 in. OD; steel cadmium plate; mfr 77339, part no. MS16624-4040.
EW	SCREW, MACHINE, FLAT, COUNTERSUNK HEAD, 100°, CROSS-RECESSED: 4-40 UNC-2A, 0.375 in. long; MIL type MS24693-4.
EX	SCREW, MACHINE, FLAT, COUNTERSUNK HEAD, 100° CROSS-RECESSED: 4-40 UNC-2A, 0.050 in long; MIL type MS24693-2
EY	PIN, SPRING, CRES: 0.188 in. long, 0.62 in. dia; MIL type 171431.
EZ	SCREW, MACHINE, PAN HEAD, CROSS RECESSED, CRES: No. 6-32 UNC-2A x 5/8 in. long, MIL type MS51957-31.
FA	WASHER, LOCK, FLAT - INTERNAL TOOTH: No. 10, 0.195 in. ID, 0.365 in. OD, 0.020 in. thk; MIL type MS35333-73.
FB	RIVET: 0.06 in. OD, 0.17 in. length; mfr 98738, part no. 05S111345-8.
FC	SHIM, ALUMINUM: 2.00 in. w, 0.30 in. thk; mfr 14304, part no. 0026-1012-1.
FD	SHIM, ALUMINUM: 2.0 in. w, 0.16 in. thk; mfr 14304, part no. 0026-1012-2.
FE	WASHER, FLAT: 0.516 in. ID, 0.80 in. OD, 0.012 in. thk; mfr 06845, part no. 4032130-0002.

Table 7-4. List of Attaching Hardware (Continued)

LETTER CODE	DESCRIPTION
FF	WASHER, NYLON: No. 4, 0.120 in. ID, 0.25 in. OD, 0.020 in. thk; mfr 98738, part no. 04S131026-5.
FG	WASHER, FLAT - METAL, ROUND, CRES: No. 10, 0.219 in. ID, 0.438 in. OD, 0.049 in. thk; MIL type MS15795-808.
FH	SCREW, MACHINE, FLAT, COUNTERSINK HEAD, 82°, CROSS-RECESSED, CRES: No. 6-32 UNC-2A x 1/4 in. long; MIL type MS51959-26
FI	Not used.
FJ	WASHER, FLAT: 0.19 in. ID, 0.50 in. OD, 0.02 in. thk; 06845, part no. 4032130-0001.
FK	SHIM, CRES: 0.20 in. dia, 0.01 in. thk; mfr 06845, part no. 2074903-3404.
FL	SCREW, MACHINE, HEX HEAD: No. 4-40 UNC-2A x 0.56 in. long; mfr 98738, part no. 03P228279-01.
FM	SCREW, CAP, SOCKET HEAD, SELF-LOCKING, CAD. STEEL ALLOY: No. 4-40 UNC-3A, 0.50 in. long, 0.112 in. body dia., MI: type MS16997-11.
FN	SCREW, CAP, SOCKET HEAD, SELF-LOCKING, CAD. STEEL ALLOY: No. 6-32 UNC-3A, 0.138 in. long, 0.138 in. body dia.; MIL type MS16997-21.
FO	Not used.
FP	RING, RETAINING: 0.208 in. dia, shaft, 0.208 in. dia free, 0.029 in. thk; MIL type MS16632-4023.
FQ	SETSCREW - HEXAGON SOCKET, CRES: 40 UNC-3A, 0.125 in. long, 0.061 point dia.; MIL type MS51021-9.
FR	WASHER, DETENT: Teflon; 0.265 in. ID, 0.62 in. OD, 0.10 in. thk; mfr 06845, part no. 4032137-0001.
FS	SCREW, MACHINE, FLAT HEAD: No. 40-UNC, 0.12 in. long, 0.11 in. dia; MIL type MS51959-12.
FT	SCREW, MACHINE - PAN HEAD, SLOTTED, TEFLON: No. 6-32 UNC-2A x 0.50 in. long; mfr 98738, part no. 03P228453-30.
FU	SCREW, MACHINE, FLAT, COUNTERSUNK HEAD, 82°, CROSS-RECESSED, CRES: No. 6-32 UNC-2A x 1/4 in. long; MIL type MS51959-27.
FV	RIVET, TUBULAR, OVAL HEAD, BRASS: 0.094 in. long, 0.089 in. body dia.; MIL type MS16535-53.
FW	NUT, PLAIN, CLINCH: 0.112-40 UNC-2B x 0.250 in. OD, 0.092 in. thk; 0.166 in. stem dia.; MIL type M45938/1-3C.
FX	NUT, PLAIN, SPLINE FASTENER: No. 10-32-2B threads, 0.272 in. ID, 3/8 in. OD, 1/8 in. thk; mfr 46384, part no. KFS2-032, 98738, dwg no. 02S132160-7.

Table 7-5. List of Manufacturers

CODE NUMBER	MANUFACTURER'S NAME AND ADDRESS	CODE NUMBER	MANUFACTURER'S NAME AND ADDRESS
00136	McCoy Electronics Co. Watts & Chestnut Sts. Mt. Holly Springs, PA 17065	02768	Illinois Tool Works Inc. Faxtex Division Des Plaines, IL 60016
00141	Benrus Corp., PIC Design Div. P. O. Box 335 Benrus Center Ridgefield, CT 06877	04347	The Hysol Div. of Dexter Corp. 211 Franklin St. Olean, NY 14760
00213	Nytronics Components Group Division of Nytronics Orange St. Darlington, S.C. 29532	04713	Motorola, Inc. Semiconductor Group 4828 E. McDonald Rd. Phoenix, AZ 85008
00328	Designatronics, Inc. Sterling Instruments Div. 55 S. Denton Ave. New Hyde Park, NY 11040	04963	Minnesota Mining and Mfr. Co. Adhesives, Coatings and Sealers Div., 3M center St. Paul, MN 55105
00779	Amp Inc. Eisenhower Blvd. Harrisburg, PA 17105	05236	Jonathan Mfg. Co. 1101 S. Acacia Ave. Fullerton, CA 92631
01121	Allen-Bradley Co. 1201 S. 2nd St. Milwaukee, WI 53204	05972	Loctite Corp. 705 N. Mountain Road Newington, CT 06111
01295	Texas Instruments, Inc. Semiconductor Group P. O. Box 5012 13500 N. Central Expressway Dallas, TX 75222	06845	The Bendix Corp. Communications Division E. Joppa Rd. Baltimore, MD 21204
01961	Pulse Engineering, Inc. 7250 Convoy Court San Diego, CA 92111	06848	The Bendix Corp. Energy Controls Div. 717 N. Bendix Dr. South Bend, IN 46620
02697	Parker Seal Co., O-Ring Div. of Parker-Hannifin Corp. 2360 Palumbo Dr. Lexington, KY 40509	06978	AIE/Div. of Verntron 701 Murfreesboro Rd. Nashville, TN 37210
02735	RCA Corp., Solid State Div. Rt 202 Somerville, N.J. 08876	07047	The Milton Ross Co. 511 Second St. Pike Southampton, PA 18966

Table 7-5. List of Manufacturers (Continued)

CODE NUMBER	MANUFACTURER'S NAME AND ADDRESS	CODE NUMBER	MANUFACTURER'S NAME AND ADDRESS
07263	Fairchild Camera and Instrument Corpo. Semiconductor Div. 464 Ellis St. Mountain View, CA 94042	13103	Thermalloy Co., Inc. P. O. Box 34829 2021 W. Valley View Lane Dallas, TX 75234
08289	The Blinn Delbert Co., Inc. 1678 E. Mission Blvd. P. O. Box 2007 Pomona, CA 91766	13556	TRW Cinch Connectors 1015 S. Sixth St. Minneapolis, MN 55415
08795	Rayclad Tubes, Inc. Menlo Park, CA 94025	14482	Watkins-Johnson Co. 3333 Hillview Ave. Palo Alto, CA 94304
08800	General Electric Co. Insulating Materials Product Section One Campbell Rd. Schenectady, NY 12306	17069	Circuit Structures Lab. 3200 N. San Fernando Blvd. Burbank, CA 91504
09021	Airco Speer Electronics Bradfort, PA 16701	18324	Signetics Corp. Military Products Div. 4130 S. Market Court Sacramento, CA 95834
09922	Burndy Corp. Richards Ave. Norwalk, CT 06852	18518	MST Electronics, Inc. 34-32 57th St. Woodside, NY 11377
11433	Control Knobs, Inc. 105 - 56 Tuckerton St. Jamaica, NY 11433	18723	RCA Corp. Solid State Div. Electro-Optics and Devices 415 South 5th St. Harrison, NY 07029
11534	Duncan Electronics, Inc. 2865 Fairview Rd. Costa Mesa, CA 92626	18736	Voltronics Corp. West St. Hanover, NJ 07936
12436	General Dynamics Corp. Electronics Div. P. O. Box 81127 5011 Kearney Villa Rd. San Diego, CA 92138	18915	The Birtcher Corp. Industrial Div. 4371 Valley Blvd. Los Angeles, CA 90032
12639	Northfield Precision Instrument Corp. 4400 Austin Blvd. Island Park, NY 11558	19057	Filtech Corp. 1250 Pratt Arlington Heights, IL 60007

Table 7-5. List of Manufacturers (Continued)

CODE NUMBER	MANUFACTURER'S NAME AND ADDRESS	CODE NUMBER	MANUFACTURER'S NAME AND ADDRESS
25088	Siemens Corp. 186 Wood Ave. South Iselin, NJ 08830	40920	Minature Bearing Div. MPB Corp. Optical Ave. Precision Park Keene, NH 03431
25140	TRW/Globe Motors An Electronic Components Div. of TRW, Inc. 2275 Stanley Ave. Dayton, OH 45404	43710	The J. M. Ney Co. Maplewood Ave. Bloomfield, CT 06002
25330	General Connector Corp. Newton, Mass. 02158	46384	Penn Engineering & Mfr. Corp. Doylestown, PA 18901
26344	Mite Corporation 466 Blake St. New Haven, CT 06515	48615	Precision Resistor Co., Inc. 113 U.S. Hwy 22 Hillside, NJ 07205
26769	NCI, Inc. 5900 Australian Ave. West Palm Beach, FL 33407	51181	Keytronics, Inc. 707 North St. Endicott, NY 13760
27014	National Semiconductor Corp. 2900 Semiconductor Dr. Santa Clara, CA 95051	56289	Sprague Electric Co. North Adams, MA 01247
28994	Gladding Keystone Corp. Endicott, N. Y.	57533	Sterling Precision Corp. Comeau Bldg., Suite 900 319 Clematis St. West Palm Beach, FL 33401
29440	Winfreberg Corp. 499 Ocean Ave. E. Rockaway, L.I., New York 11518	58189	General Dynamics Corp. Electronics Div. San Diego, CA 92138
32828	Keene Corp. Kaydon Bearing Div. 2860 McCracken St. Muskegon, MI 49443	60380	The Torrington Co. Bearings Div. 59 Field St. Torrington, CT 06790
33417	Union Corp. Jones St. Verona, PA 15147	70472	Associated Spring Corp. 18 Main St. Bristol, CT 06010
34371	Harris Corp. Harris Semiconductor Div. 200 Palm Bay Blvd. P. O. Box 883 Melbourne, FL 32901	70485	Atlantic India Rubber Works, Inc. 571 W. Polk St. Chicago, IL 60607

Table 7-5. List of Manufacturers (Continued)

CODE NUMBER	MANUFACTURER'S NAME AND ADDRESS	CODE NUMBER	MANUFACTURER'S NAME AND ADDRESS
71279	Cambridge Thermionic Corp. 445 Concord Ave. Cambridge, MA 02138	77820	The Bendix Corp. Electrical Components Div. Sherman Ave. Sidney, NY 13838
71468	ITT Cannon Electric 666 East Dyer Rd. Santa Ana, CA 92702	78189	Illinois Tool Works, Inc. Shakeproof Division St. Charles Road Elgin, IL 60120
71482	C. P. Clare & Co. 3101 Pratt Blvd. Chicago, IL 60645	78488	Stackpole Carbon Co. St. Marys, PA 15857
71785	TRW Cinch Connectors 1501 Morse Ave. Elk Grove Village, IL 60007	79963	Zierick Mfg. Co. Radio Circle Mt. Kisco, NY 10549
72136	Electro Motive Corp. P. O. Box 7600, Lauter Ave. Florence, SC 29501	81073	Grayhill, Inc. La Grange, IL 60525
72259	Nytronics, Inc. 105 Madison Ave. New York, NY 10016	81815	Communication Coil Co. 2839 N. Narragansett Ave. Chicago, IL 60634
72914	Grimes Manufacturing Co. 515 N. Russell Urbana, OH 43078	82219	GTE Sylvania, Inc. Electronics Component Group Electronic Tube Div. W. Third St. Emporium, PA 15834
72962	Esna Div. of Amerace Corp. 2330 Vauxhall Road Union, NJ 07083	82389	Switchcraft, Inc. 5555 N. Elston Ave. Chicago, IL 60630
75263	Keystone Carbon Co. 1935 State St. St. Marys, PA 15857	84411	TRW Electronic Components TRW Capacitors 112 W. First St. Ogallala, NE 69153
76854	Oak Industries Inc. Switch Div. S. Main St. Crystal Lake, IL 60014	84971	TA Mfg. Corp. A Viking Industries Co. 375 W. Arden Ave. Glendale, CA 91203
77339	National Lock Washer Co. P.O. Box 5115 Industrial Parkway North Branch, NJ 08876		

Table 7-5. List of Manufacturers (Continued)

CODE NUMBER	MANUFACTURER'S NAME AND ADDRESS
88245	Litton Systems, Inc. Useco Div. 13536 Saticoy St. Van Nuys, CA 91409
91146	ITT Cannon Elect. Inc. Los Angeles, CA 90031
91506	Augat, Inc. P. O. Box 779 633 Perry Ave. Attleboro, MA 02703
91662	Elco Corp. Maryland Rd. and Computer Ave. Willow Grove, PA 19090
91737	ITT-Cannon/Gremar 922 S. Lyon St. Santa Ana, CA 92705
93292	Central Coil Co., Inc. Box 348A, RR2 Camby, IN 46113
93928	Forbes and Wagner Inc. 345 Central Ave. Silver Creek, NY 14136
94025	Mill Supply Div. of Pelta Brothers, Inc. 3499 Inventors Rd. Norfolk, VA 23502
95105	Rockwell International Corp. Collins Radio Group 4311 Jamboree Rd. Newport Beach, CA 92663
95712	Bendix Corp. Electrical Components Div. Microwave Devices Plant Hurricane Rd. Franklin, IN 46131
95987	Weckessar Co., Inc. 4444 West Irving Park Rd. Chicago, IL 60641
96253	Transformer Technicians, Inc. 4447 W. Armitage Ave. Chicago, IL 60639
96256	Thordarson-Meissner Inc. A subsidiary of Components Corporation of America Electronic Center Mt. Carmel, IL 62863
97539	APM-Hexseal Corp. 44 Honeck St. Englewood, NJ 07631
98291	Sealectro Corp. 225 Hoyt Mamaroneck, NY 10544
98738	Stewart-Warner Corp. Electronic Div. 1300 N. Kostner Ave. Chicago, IL 60651
98978	International Electronic Research Corp. 135 W. Magnolia Blvd. Burbank, CA 91502
99378	Atlee Corp. 8 Gill St. Woburn, MA 01801
99515	ITT Jennings Monrovia Plant Div. 1960 Walker Ave. Monrovia, CA 91016
99941	X-Acto 48-41 Van Dam St. Long Island City, NY 11101

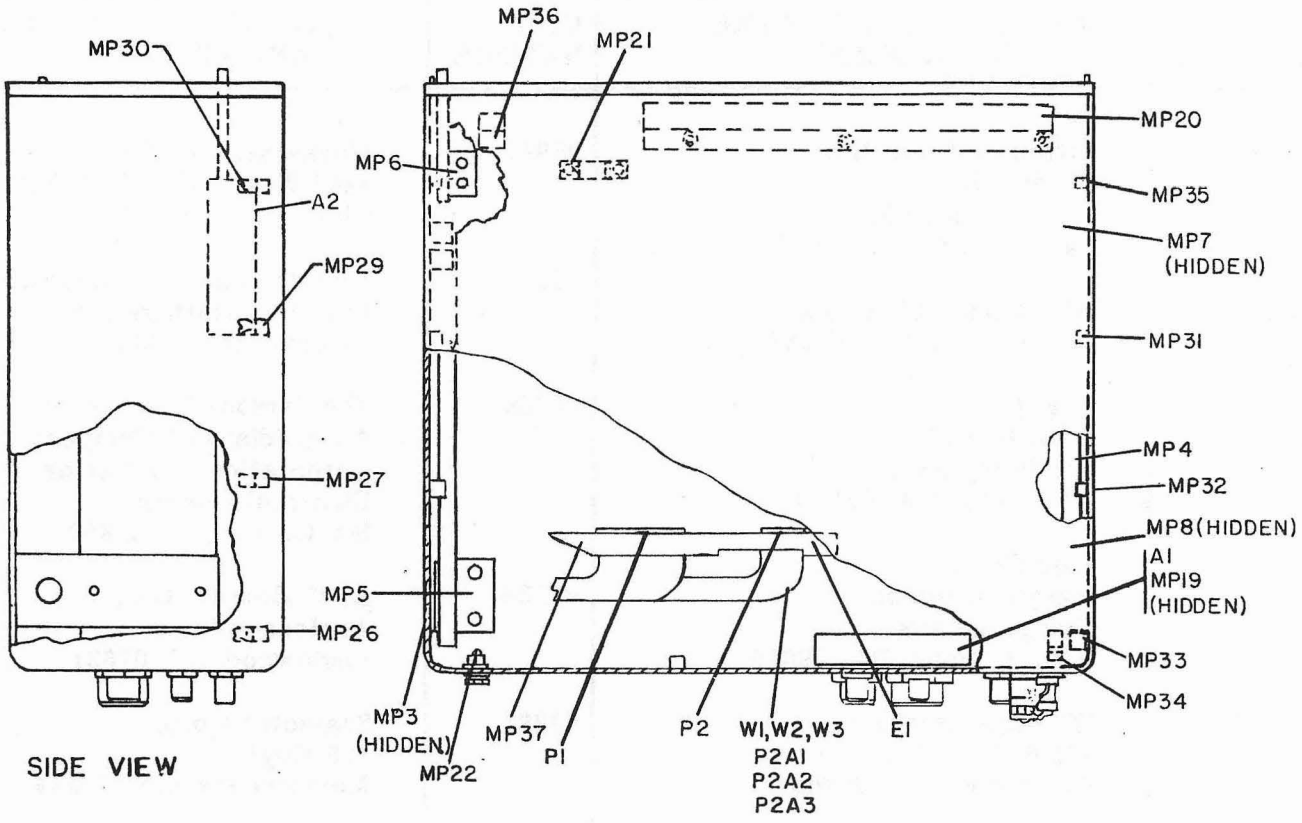

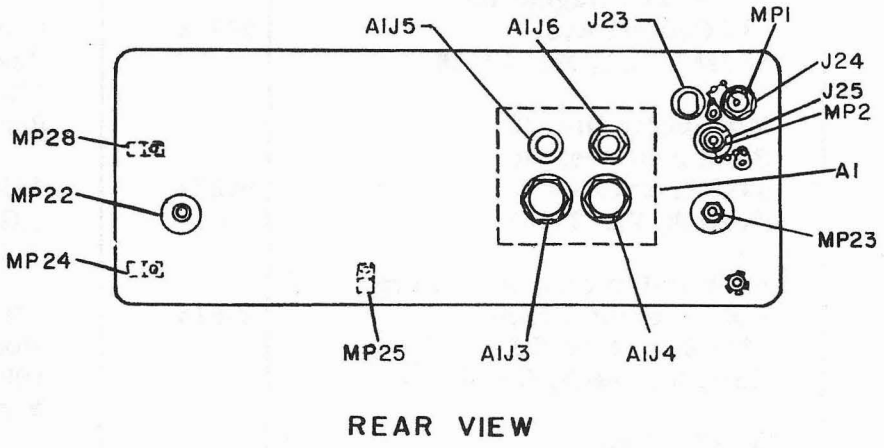

Figures 7-1. Receiver Case 1A1, Component Locations

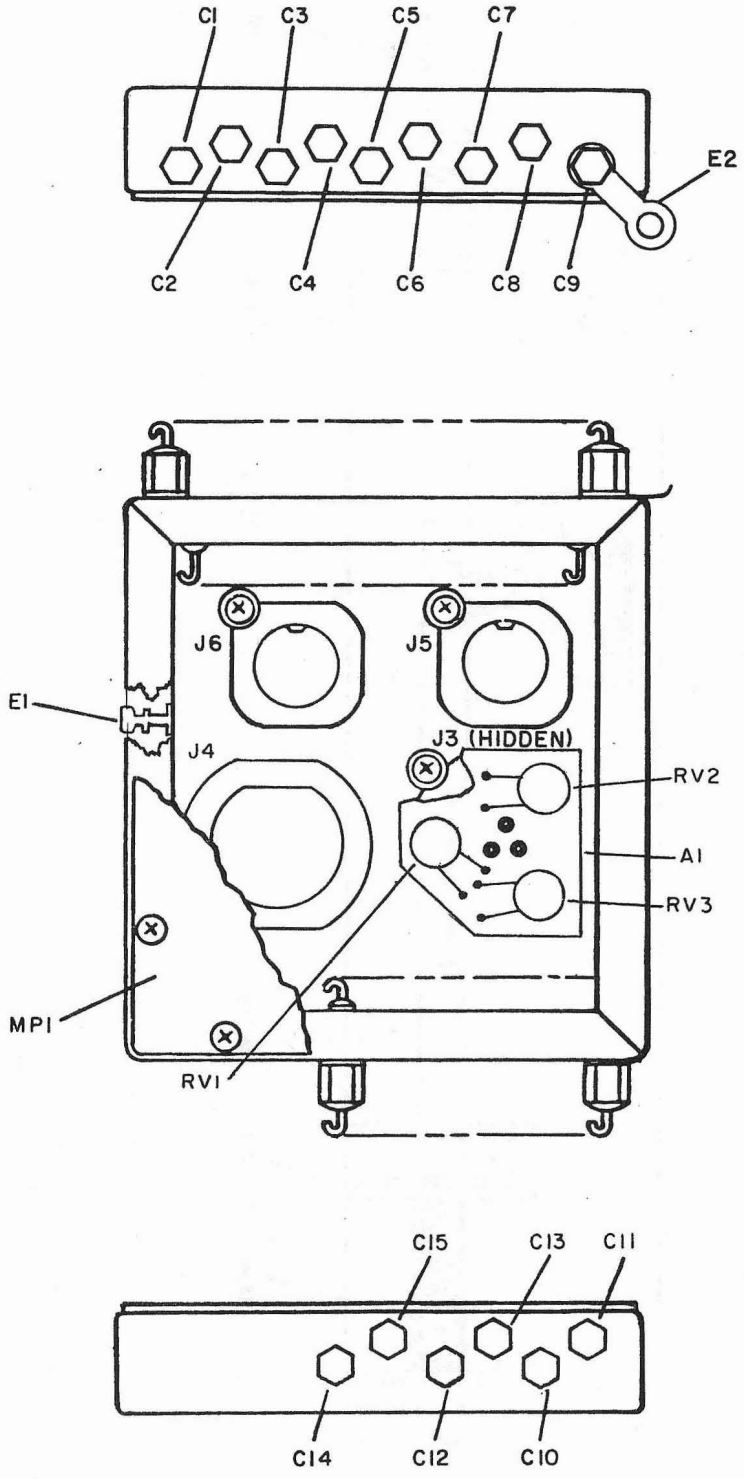

Figure 7-2. Filter Box Assembly A1A1, Component Locations

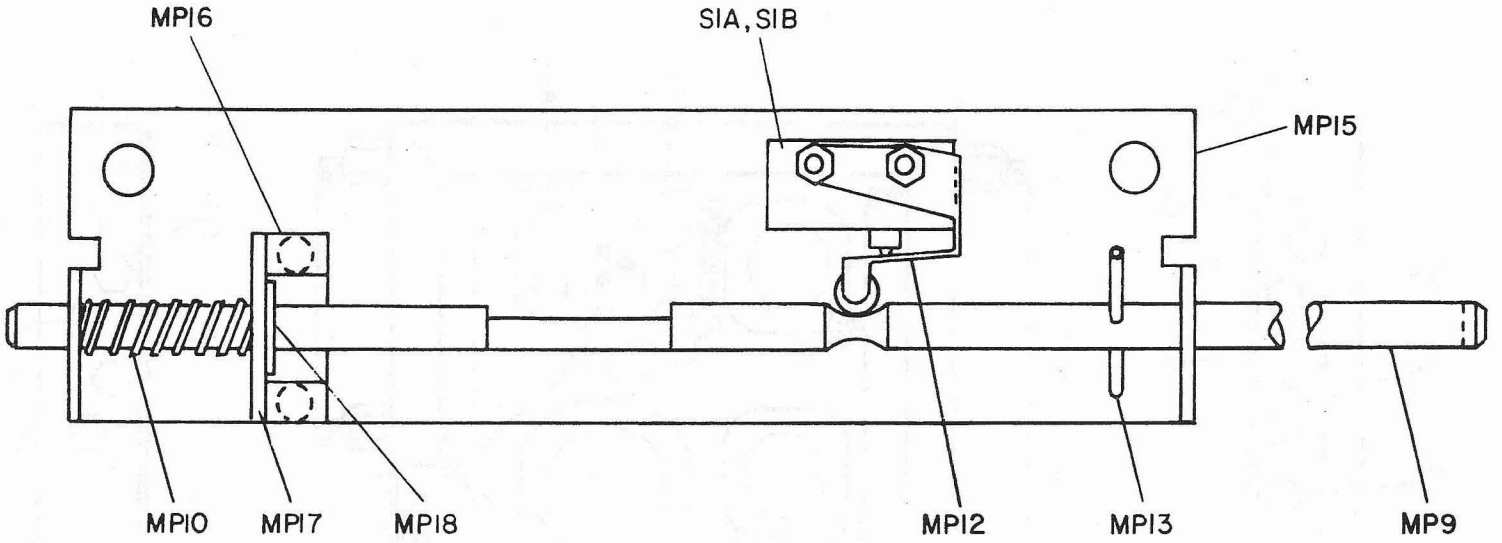

Figure 7-3. Interlock Switch Assembly A1 A2
Component Locations

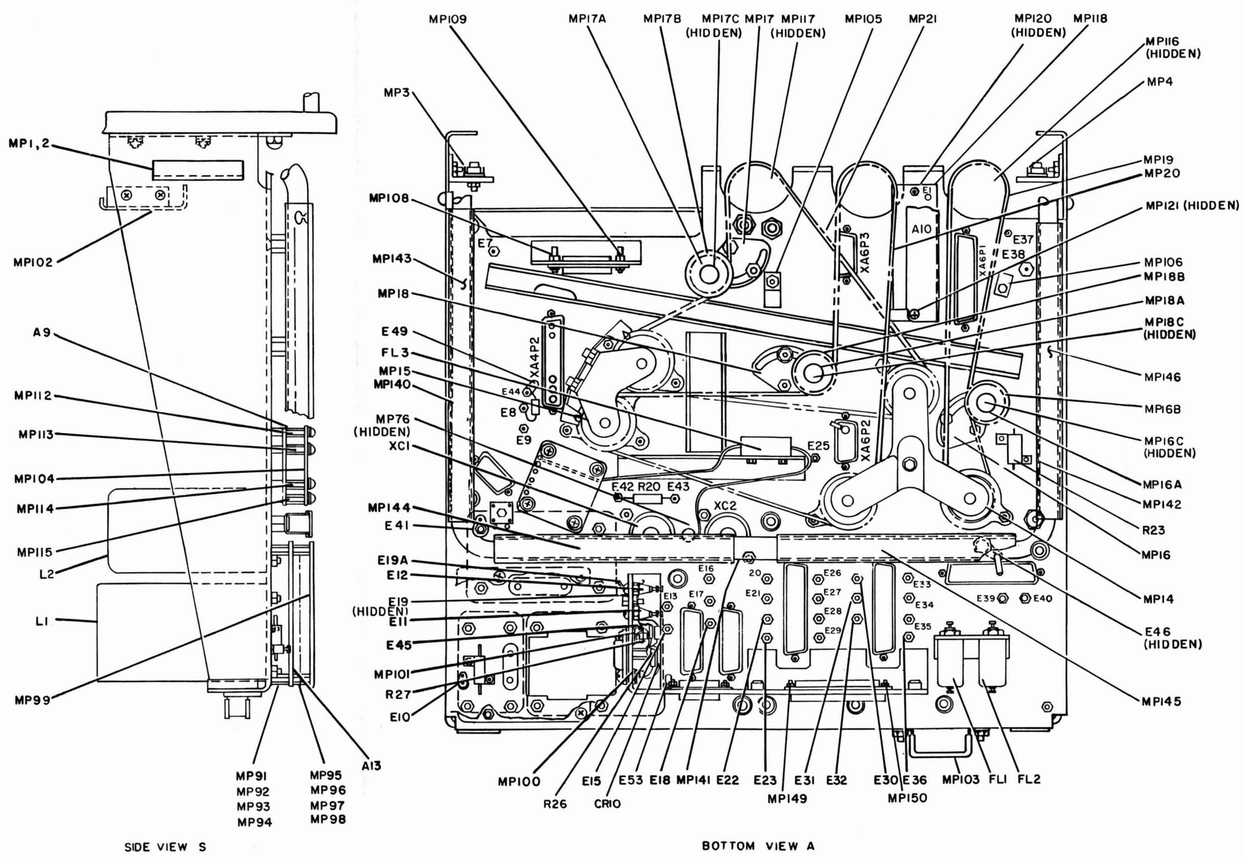

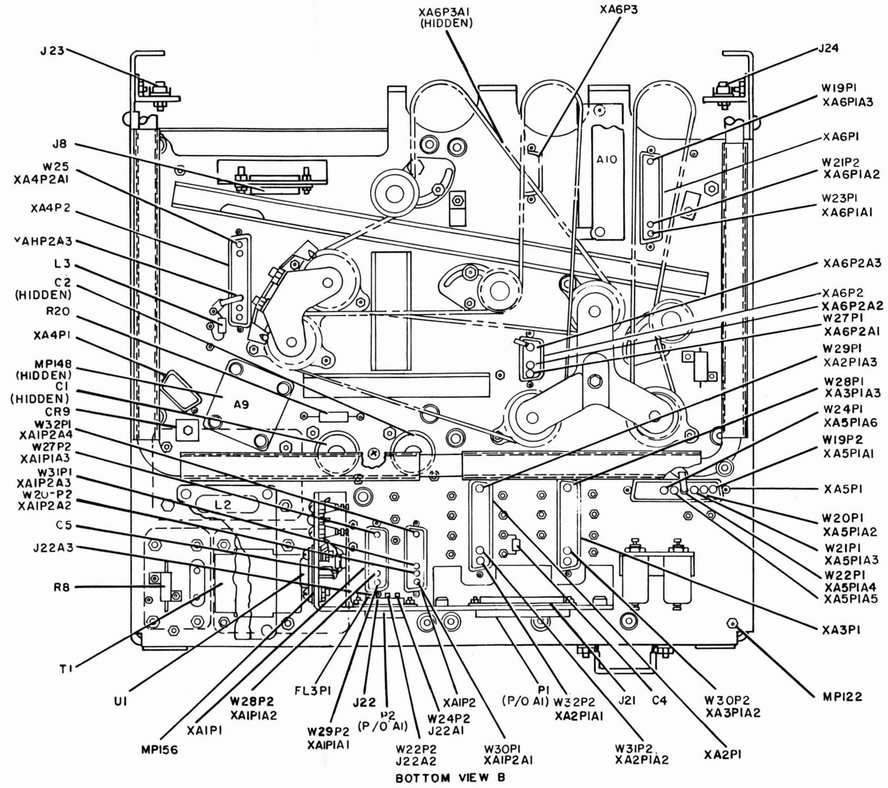

Figure 7-4. Receiver Chassis Assembly A2, Component Locations

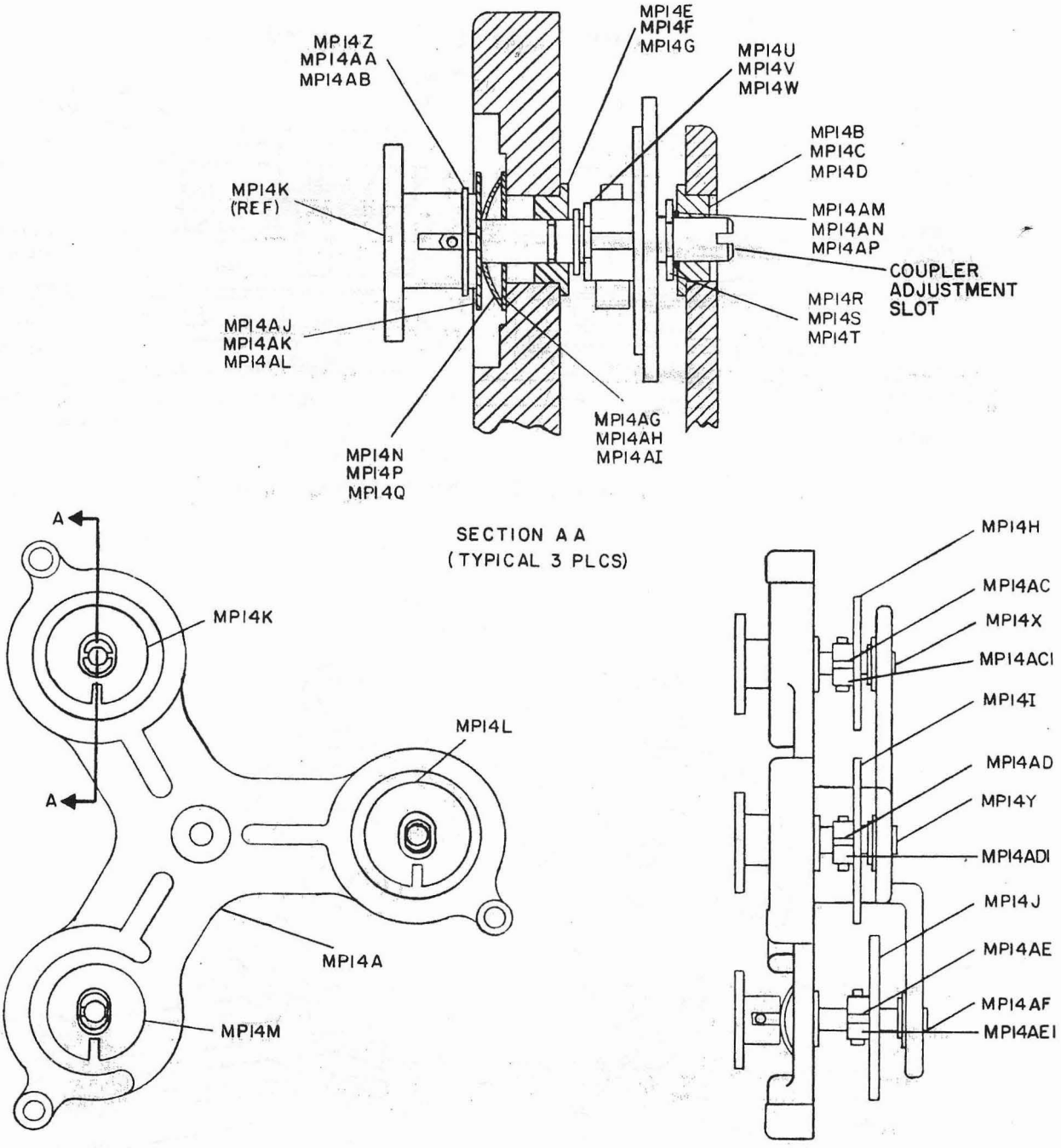

Figure 7-5. Triple Sprocket Assembly A2MP14, Component Locations

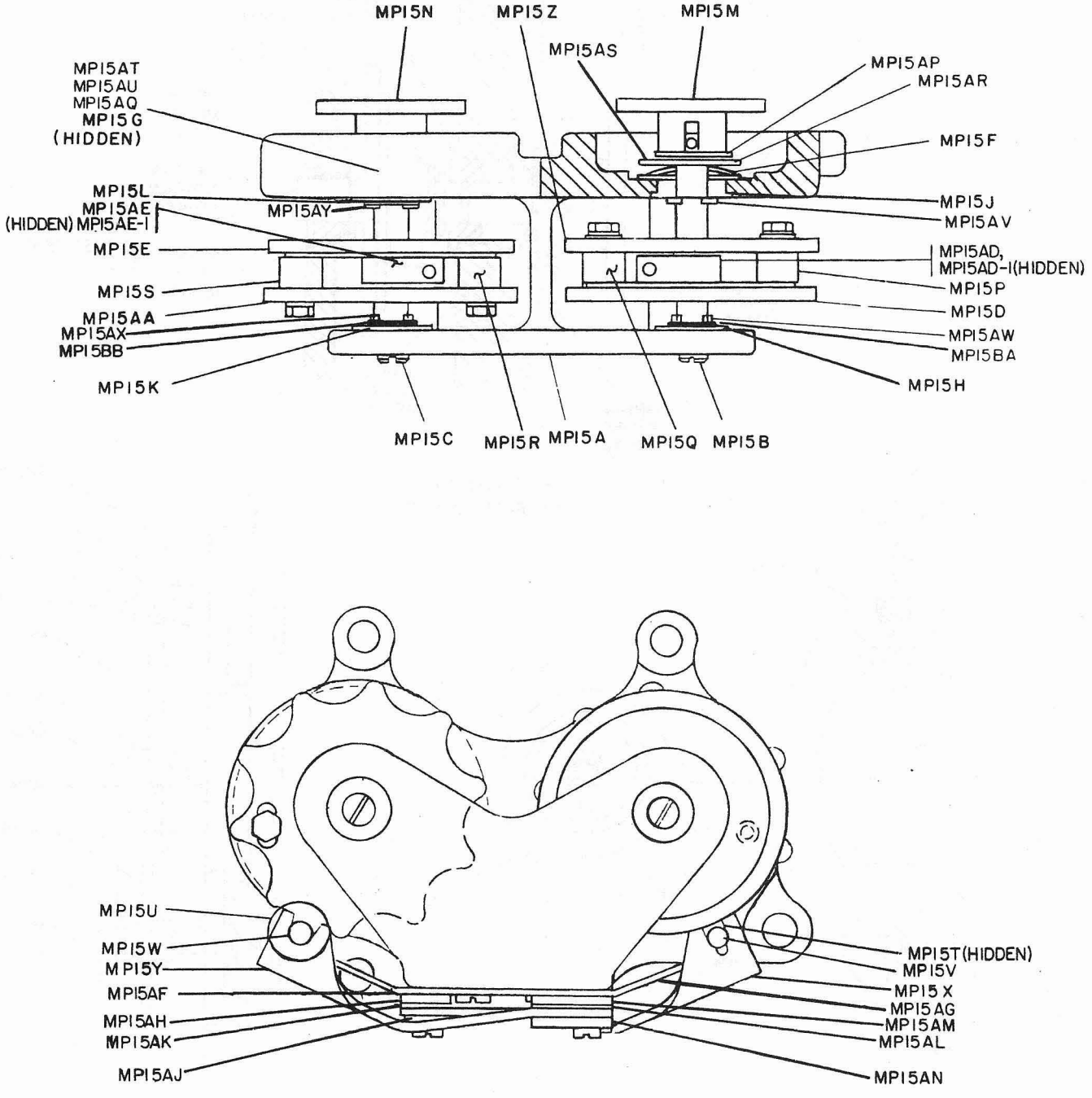

Figure 7-6. Dual-Sprocket Assembly A2MP15, Component Locations

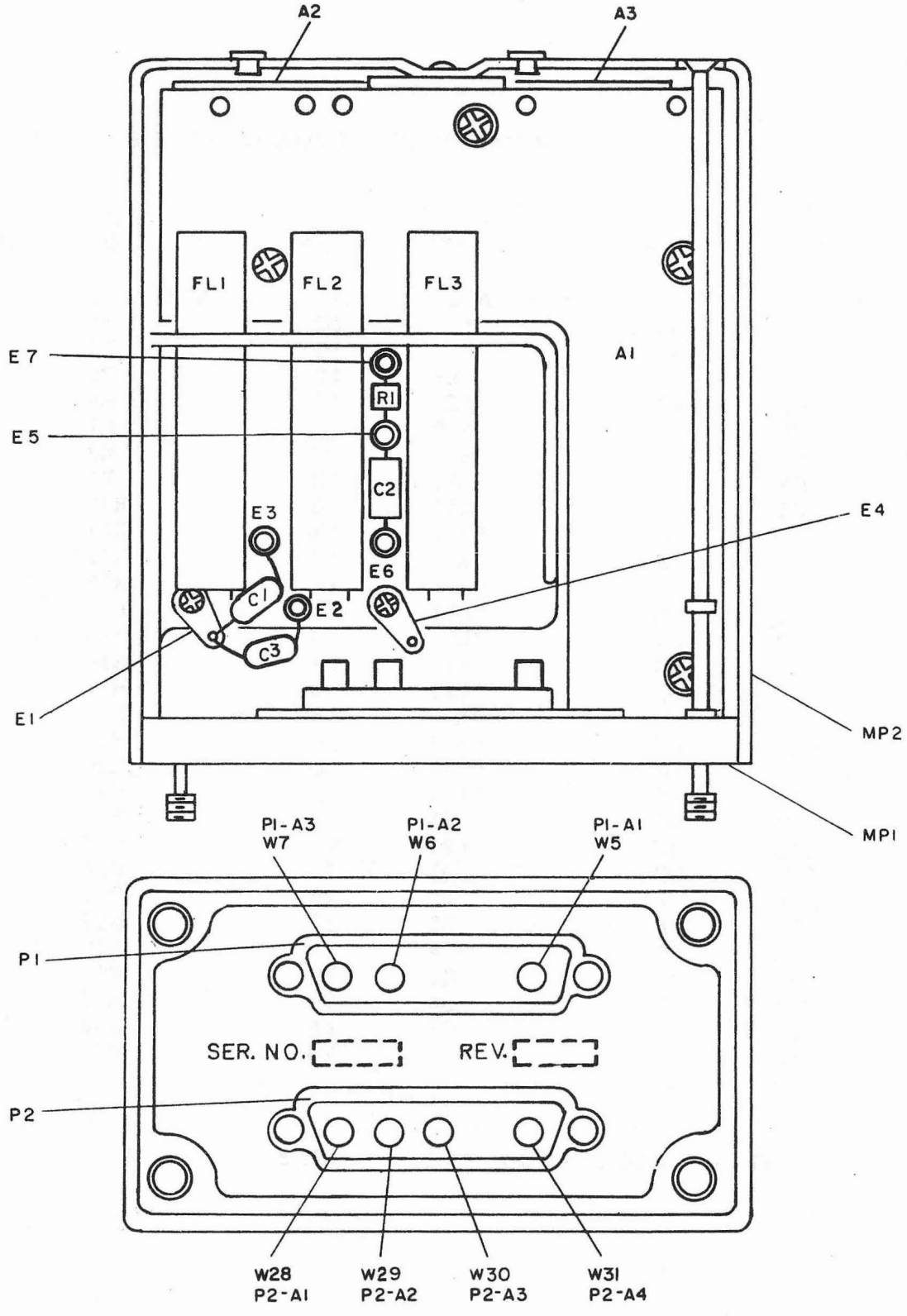

Figure 7-7. Receiver Mode Selector Assembly A2A1, Component Locations

PART LOCATION INDEX FOR FIGURE 7-8

REF. DES.	ZONE	REF. DES.	ZONE	REF. DES.	ZONE
A2A1A1C1	4F	*A2A1A1E5	2F	A2A1A1R2	6G
C2	7G	*E6	2G	R3	6G
C3	6G	*E7	3G	R4	5G
C4	5F	*E8	1F	R5	5G
C5	4F	*E9	1F	R6	5G
C6	2F	*E10	7G	R7	5G
C7	3G	*E11	7G	R8	3F
C8	2G	*E12	3E	R9	4F
C9	1F	*E13	3B	R10	4F
C10	1B	*E14	4E	R11	2F
C11	3B	*E15	1B	R12	2G
C12	1B	*E16	2E	R13	2A
C13	2A	*E17	1D	R14	1G
C14	1D	*E18	1B	R15	1G
C15	2C	*E19	1A	R16	2D
C16	2C	*E20	1C	R17	2B
C17	3D	*E21	1B	R18	2C
C18	3F	*E22	2A	R19	2D
C19	2F	*E23	1D	R20	1D
C20	1B	*E24	1E	R21	2E
C21	2D	E25	4F	R22	2C
C22	3E	E26	2D	R23	1C
C23	3G	Q1	6F	R24	2B
CR1	4E	Q2	4F	R25	2B
CR2	3F	Q3	3F	R26	2B
CR3	1C	Q4	2F	R27	2C
CR4	4E	Q5	2D	R28	2C
*E1	4F	Q6	2B	R29	1C
*E2	3F	Q7	2A	R30	2B
*E3	3G	R1	6G	TP1	6G
*E4	2G				

* WIRING TERMINATION - FOR REFERENCE ONLY

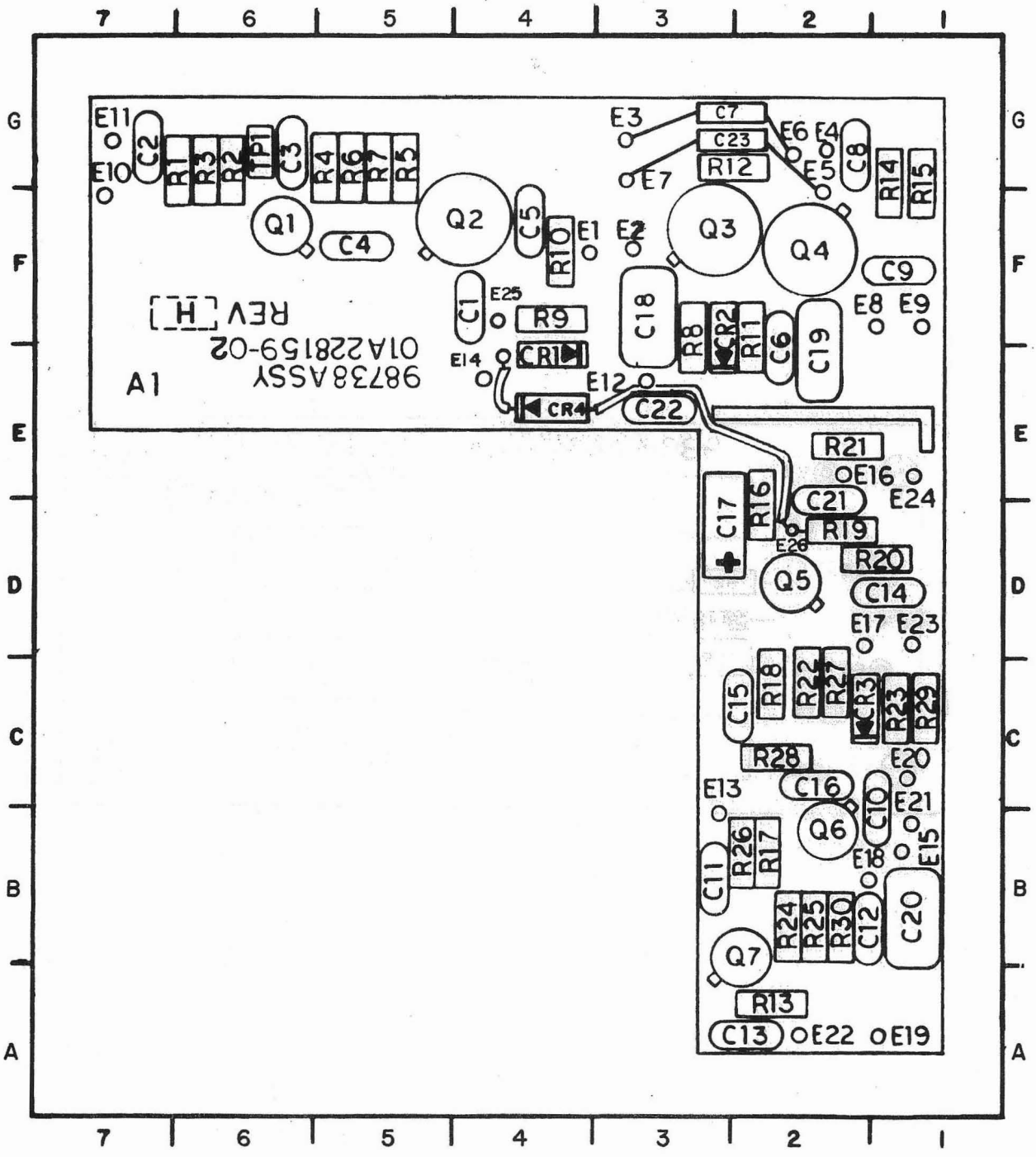

Figure 7-8. Mode Gate Subassembly A2A1A1, Component Locations

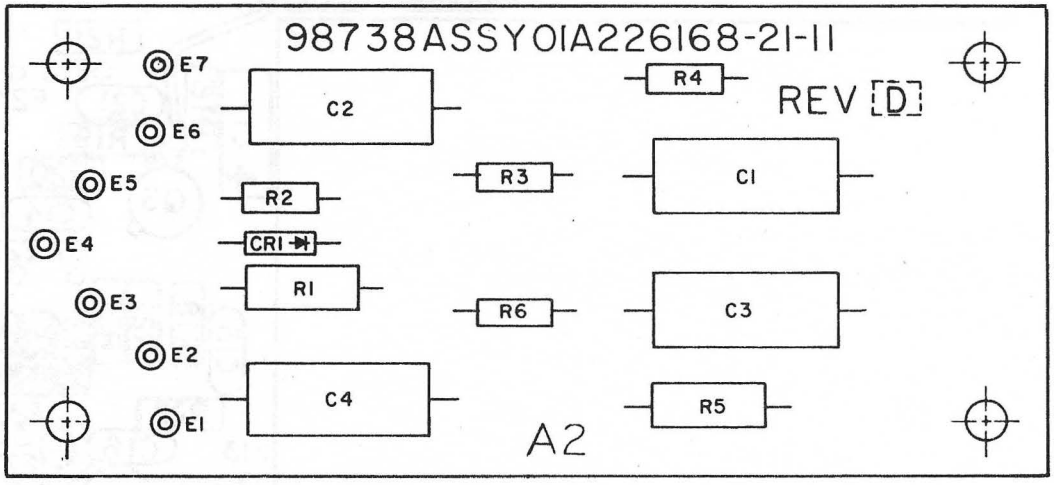

Figure 7-9. 500 kHz Gate Subassembly A2A1A2, Component Locations

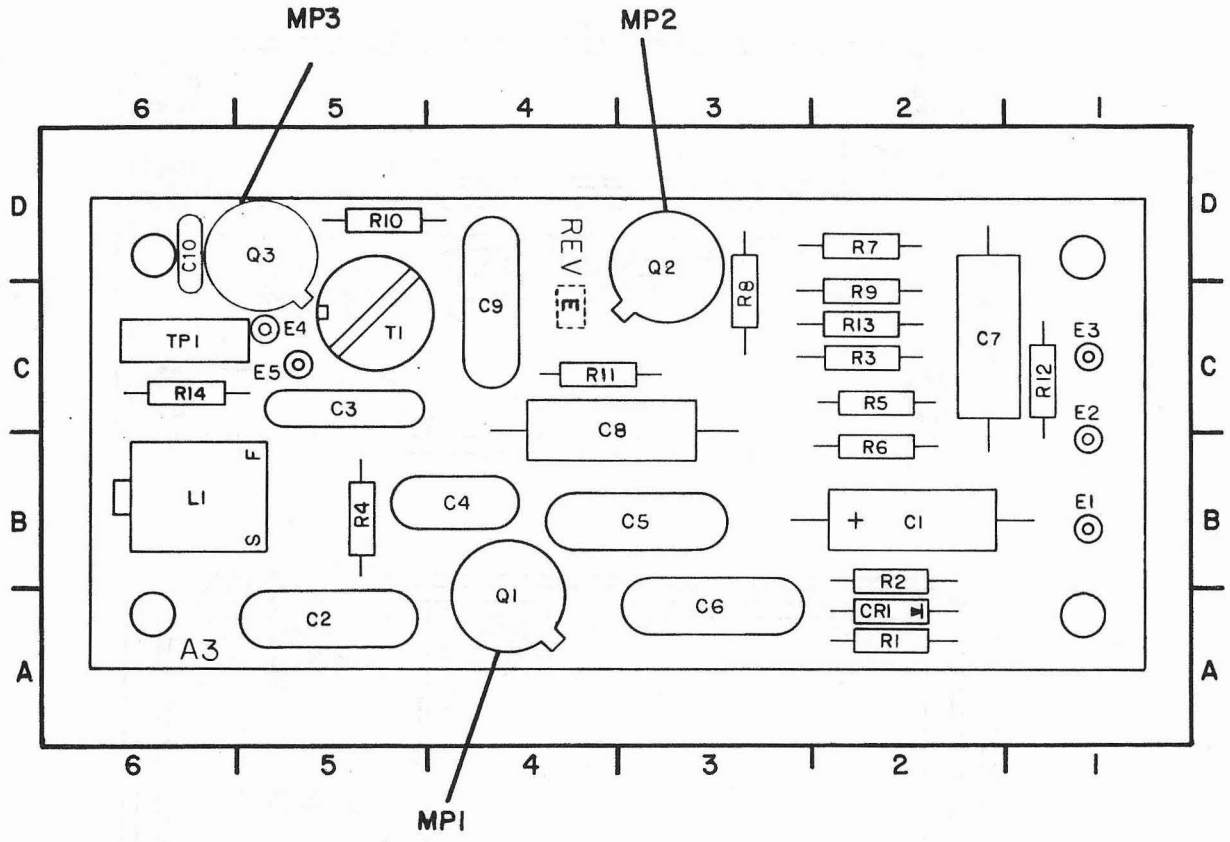

PART LOCATION INDEX

REF DES	ZONE	REF DES	ZONE	REF DES	ZONE
A2A1A3C1	2B	* A2A1A3E2	1C	A2A1A3R5	2C
C2	5A	* E3	1C	R6	2B
C3	5C	* E4	5C	R7	2D
C4	4B	* E5	5C	R8	3C
C5	3B	L1	6B	R9	2C
C6	3A	Q1	4A	R10	5D
C7	2C	Q2	3D	R11	4C
C8	4C	Q3	5D	R12	1C
C9	4C	R1	2A	R13	2C
C10	6D	R2	2B	R14	6C
CR1	2A	R3	2C	T1	5C
* E1	1B	R4	5B	TP1	6C

* Wiring termination - for reference only.

Figure 7-10. Beat Frequency Oscillator and Amplifier Subassembly A2A1A3, Component Locations

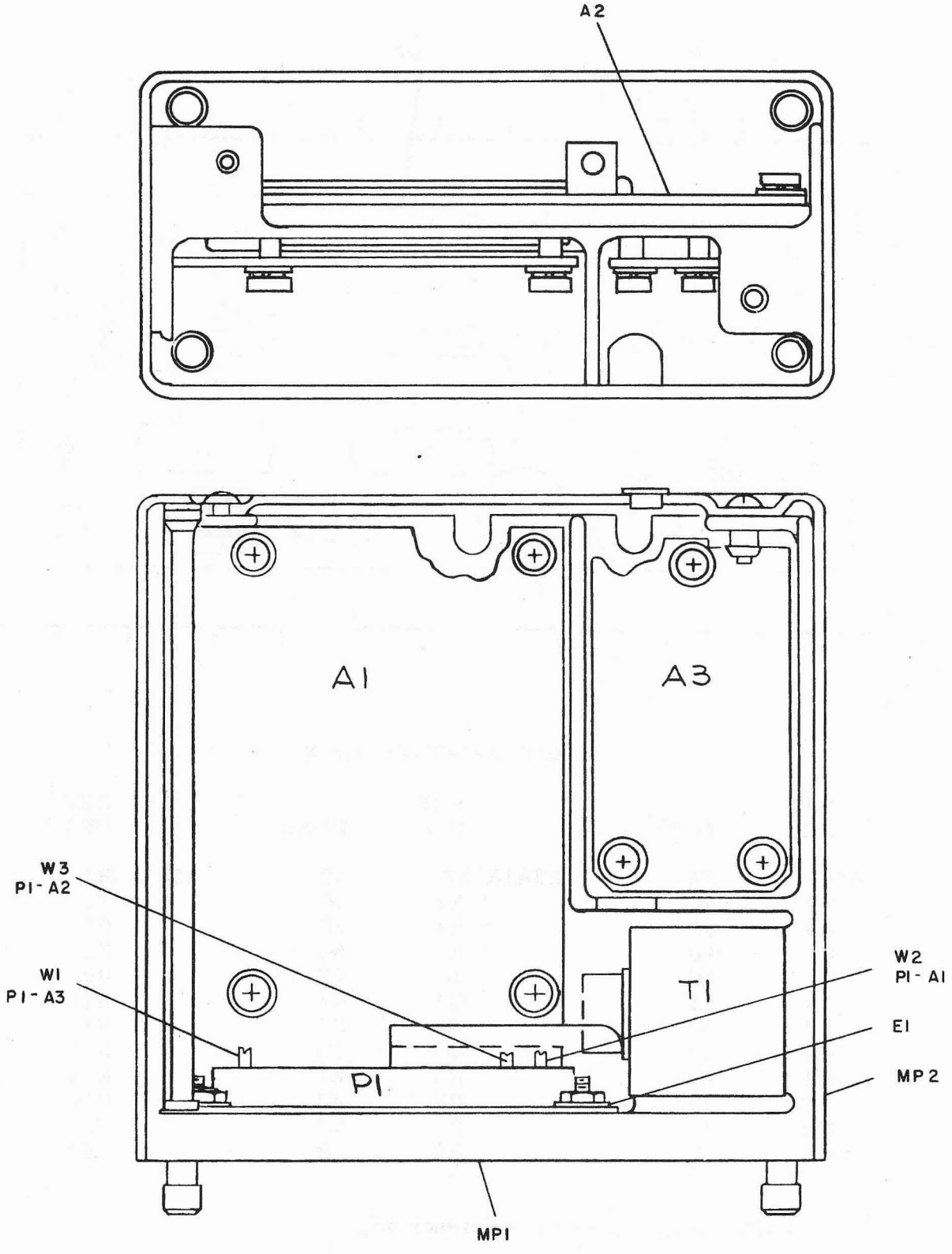

Figure 7-11. Receiver IF/Audio Amplifier Assemblies A2A2 and A2A3, Component Locations

PART LOCATION INDEX FOR FIGURE 7-12

REF. DES.	ZONE	REF. DES.	ZONE	REF. DES.	ZONE
A2A2A1C1	*	A2A2A1MP3	5B	A2A2A1R17	*
C2	4E	MP4	6B	R18	3B
C3	5C	MP5	6D	R19	5B
C4	2B	MP6	3F	R20	3D
C5	6C	MP7	2E	R21	3C
C6	3E	Q1	2E	R22	1C
C7	3B	Q2	3F	R23	2C
C8	4B	Q3	4F	R24	5E
C9	3B	Q4	5F	R25	1C
C10	2B	Q5	*	R26	1B
C11	2B	Q6	6B	R27	5E
C12	6D	Q7	2C	R28	6E
C13	5D	Q8	2A	R29	6E
C14	*	Q9	5E	R30	6E
C15	2F	Q10	6C	R31	4E
C16	6F	Q11	5C	R32	4C
CR1	1C	Q12	3C	R33	4C
CR2	3E	Q13	5B	R34	4C
CR3	3E	Q14	6D	R35	3C
CR4	5B	R1	2D	R36	4C
CR5	5B	R2	1C	R37	4C
**E1	2D	R3	2D	R38	4C
**E2	2D	R4	1F	R39	5F
**E3	4D	R5	2D	R40	5F
**E4	4D	R6	1D	R41	6C
**E5	5D	R7	4E	R42	3A
**E6	6D	R8	3E	RT1	6A
**E7	6D	R9	4E	T1	5A
**E8	1B	R10	4E	T2	3A
**E9	3D	R11	3E	TP1	1F
**E10	5D	R12	4E	TP2	1E
**E11	1B	R13	5B	A2A3A1's	Identical to A2A2A1's
**E12	4D	R14	*		
MP1	2A	R15	5A		
MP2	2C	R16	6A		

* NOT USED
** WIRING TERMINATION - FOR REFERENCE ONLY

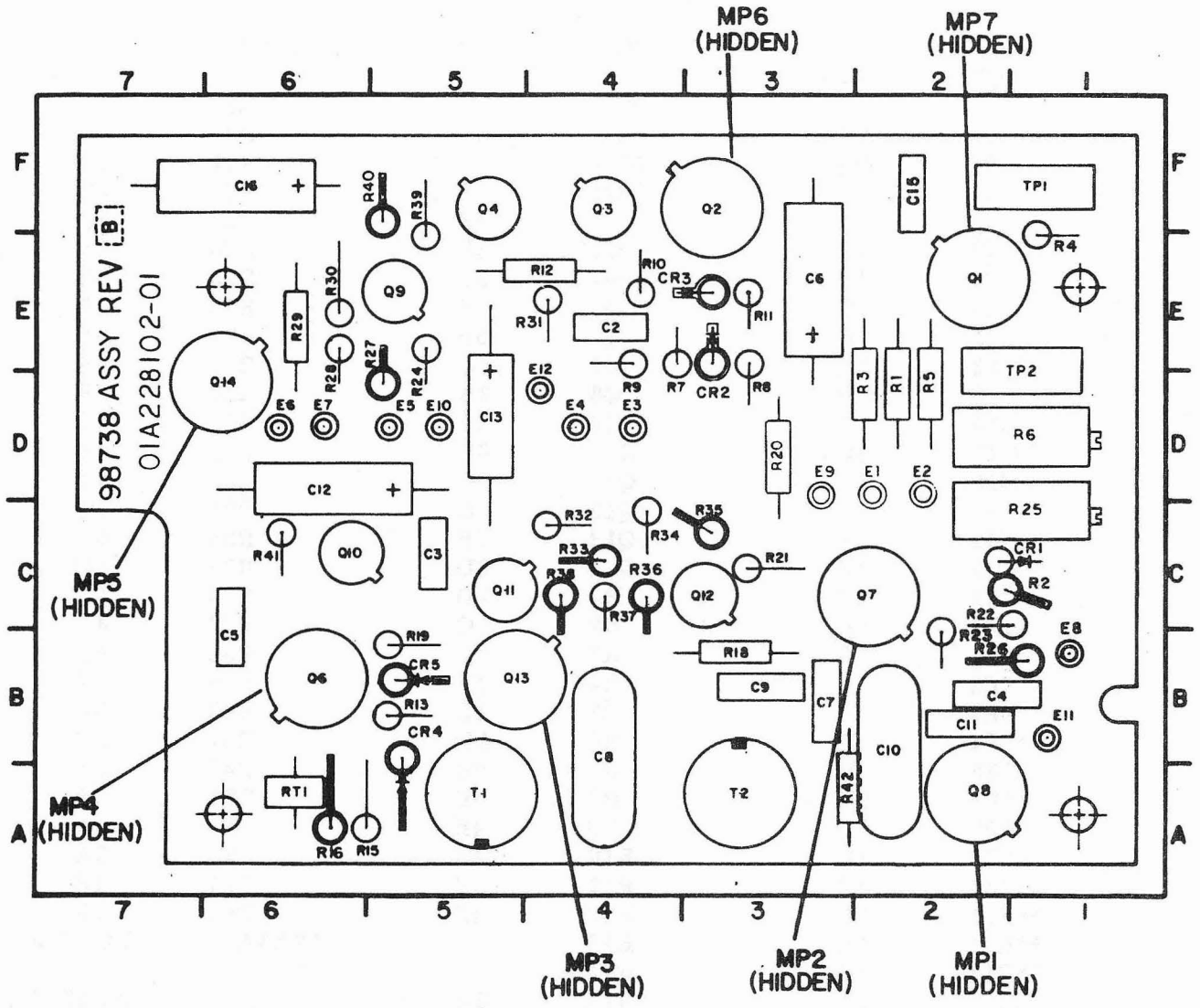

Figure 7-12. AGC Audio Amplifier Subassemblies A2A2A1 and A2A3A1, Component Locations

PART LOCATION INDEX FOR FIGURE 7-13

REF. DES.	ZONE	REF. DES.	ZONE	REF. DES.	ZONE
A2A2A2C1	2G	**A2A2A2E11	1B	A2A2A2R13	6E
C2	4F	**E12	2A	R14	4E
C3	3G	**E13	2A	R15	5E
C4	5F	**E14	2B	R16	4D
C5	4F	**E15	5B	R17	4D
C6	6F	**E16	5B	R18	6C
C7	4E	**E17	6B	R19	4C
C8	5E	**E18	6B	R20	4C
C9	3E	**E19	6E	R21	4C
C10	5D	**E20	6E	R22	5C
C11	5D	L1	2F	R23	5C
C12	4D	MP1	4E	R24	5B
C13	5C	MP2	3F	R25	5B
C14	5C	MP3	3D	R26	2E
C15	4C	MP4	4C	R27	2E
C16	5A	Q1	3F	R28	2F
C17	2F	Q2	5F	R29	3D
C18	2D	Q3	3E	R30	3D
C19	2D	Q4	4E	R31	3D
C20	2D	Q5	4D	R32	2C
C21	4B	Q6	4C	R33	3C
C22	3C	Q7	3D	R34	2C
C23	2B	Q8	4C	R35	3B
C24	3A	Q9	2C	R36	3A
C25	1F	Q10	1B	R37	2A
C26	3D	R1	3F	R38	3E
CR1	5F	R2	2G	R39	4E
**E1	2G	R3	3F	R40	2B
**E2	2G	R4	*	RT1	4F
**E3	2F	R5	5G	T1	4G
**E4	2F	R6	3F	T2	5E
**E5	3A	R7	5G	T3	5D
**E6	1C	R8	3E	T4	5C
**E7	2A	R9	5F	T5	3B
**E8	2F	R10	4F	A2A3A2	Identical to A2A2A2
**E9	1D	R11	4E		
**E10	1C	R12	3F		

* NOT USED
** WIRING TERMINATION - FOR REFERENCE ONLY

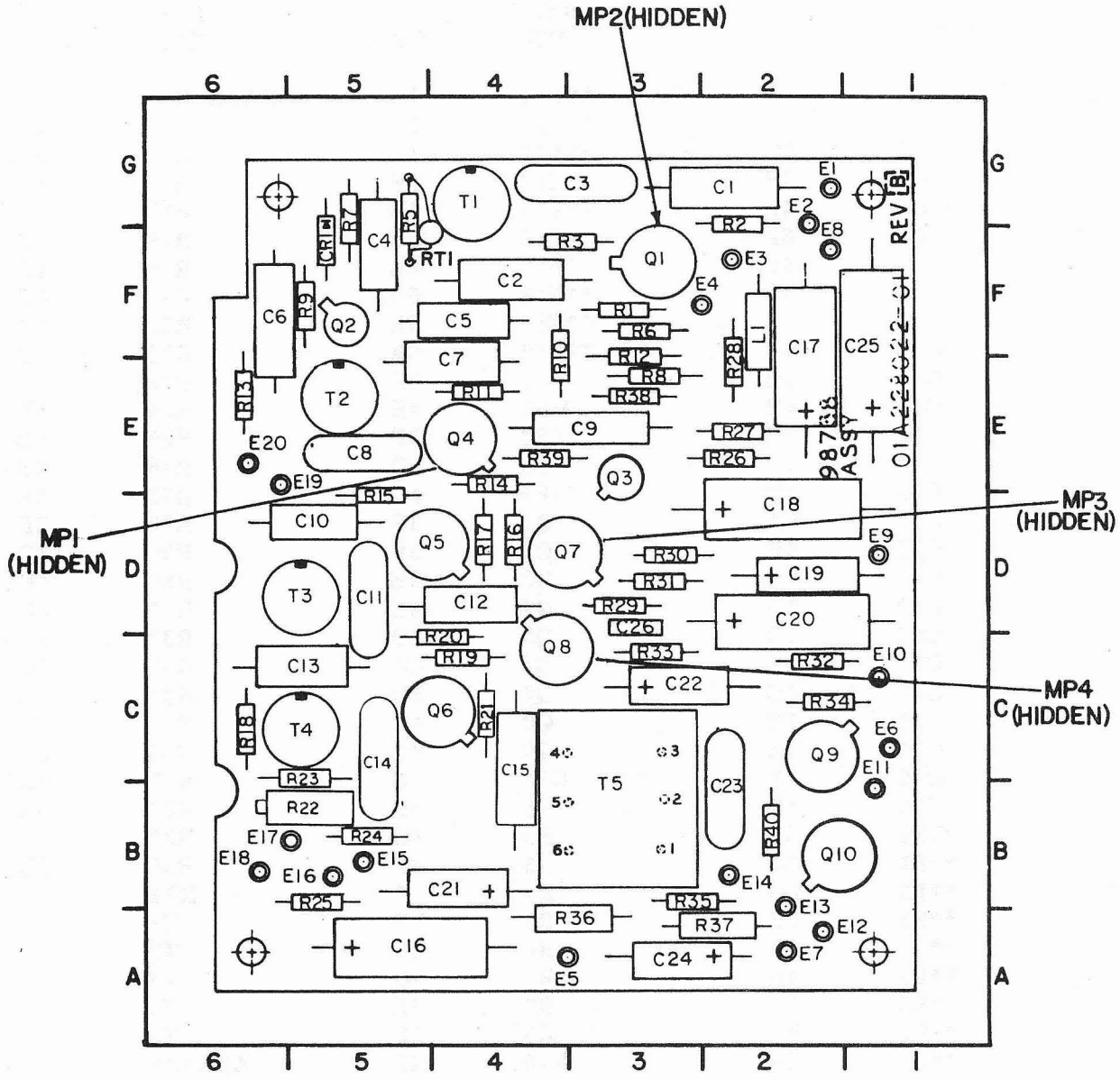

Figure 7-13. IF/Audio Amplifier Subassemblies A2A2A2 and A2A3A2, Component Locations

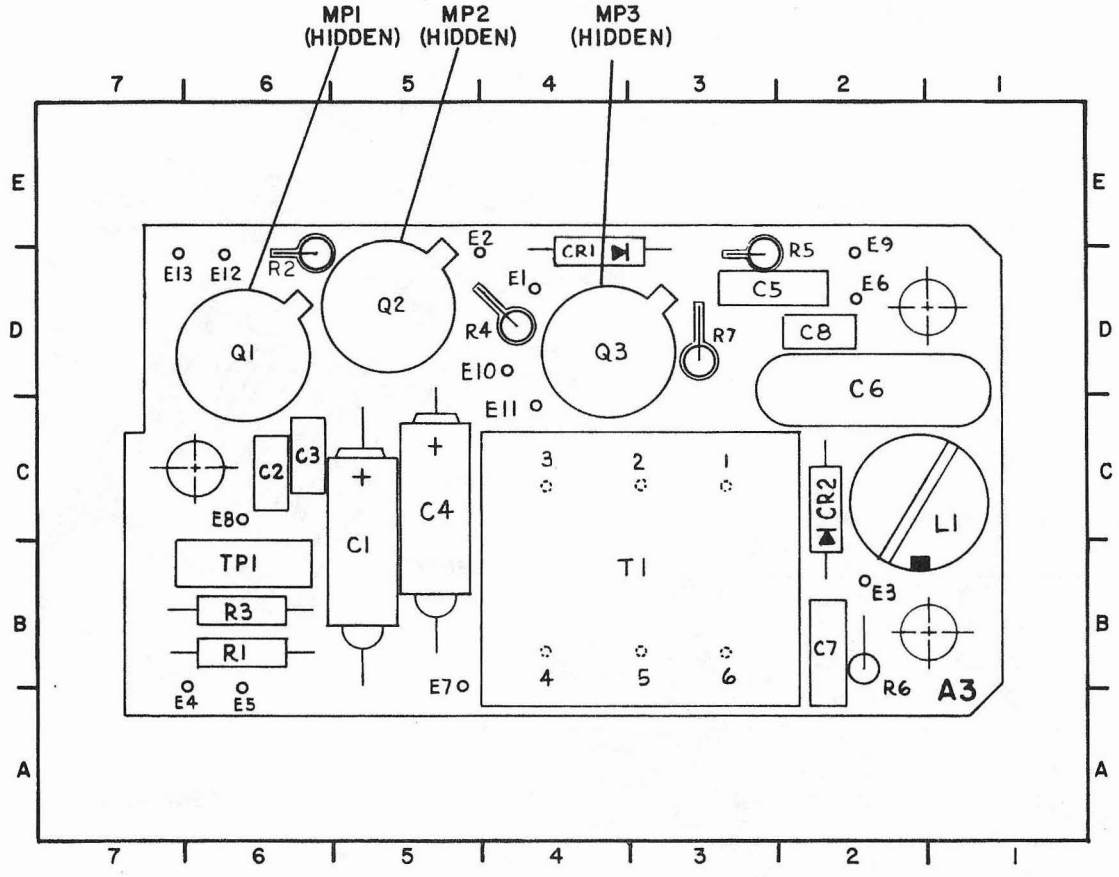

PART LOCATION INDEX

REF DES	ZONE	REF DES	ZONE	REF DES	ZONE
A2A2A3C1	5C	** A2A2A3E5	6B	A2A2A3Q2	5D
C2	6C	** E6	2D	Q3	4D
C3	6C	** E7	5B	R1	6B
C4	5C	** E8	6C	R2	6D
C5	3D	** E9	2D	R3	6B
C6	2D	** E10	4D	R4	4D
C7	2B	** E11	4C	R5	3D
C8	2D	** E12	6D	R6	2B
CR1	4D	** E13	7D	R7	3D
CR2	2C	L1	2C	T1	3B
** E1	4D	MP1	6D	TP1	6B
** E2	5D	MP2	5D		
** E3	2B	MP3	4D	A2A3 identical to A2A2	
** E4	6B	Q1	6D		

** Wiring termination - for reference only.

Figure 7-14. SSB/AM Detector Subassemblies A2A2A3 and A2A3A3, Component Locations

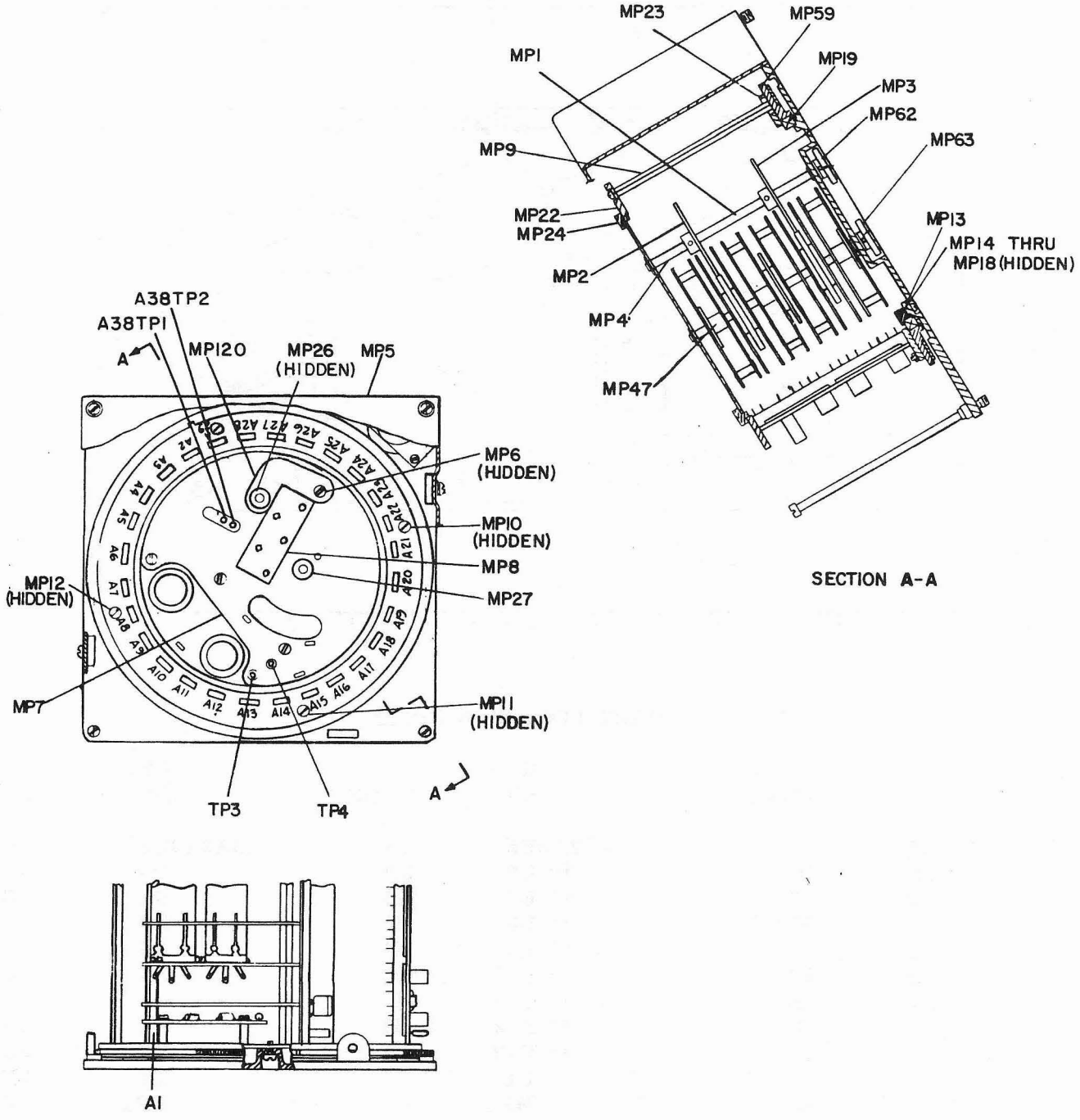

Figure 7-15. RF Amplifier Assembly A2A4, Component Locations

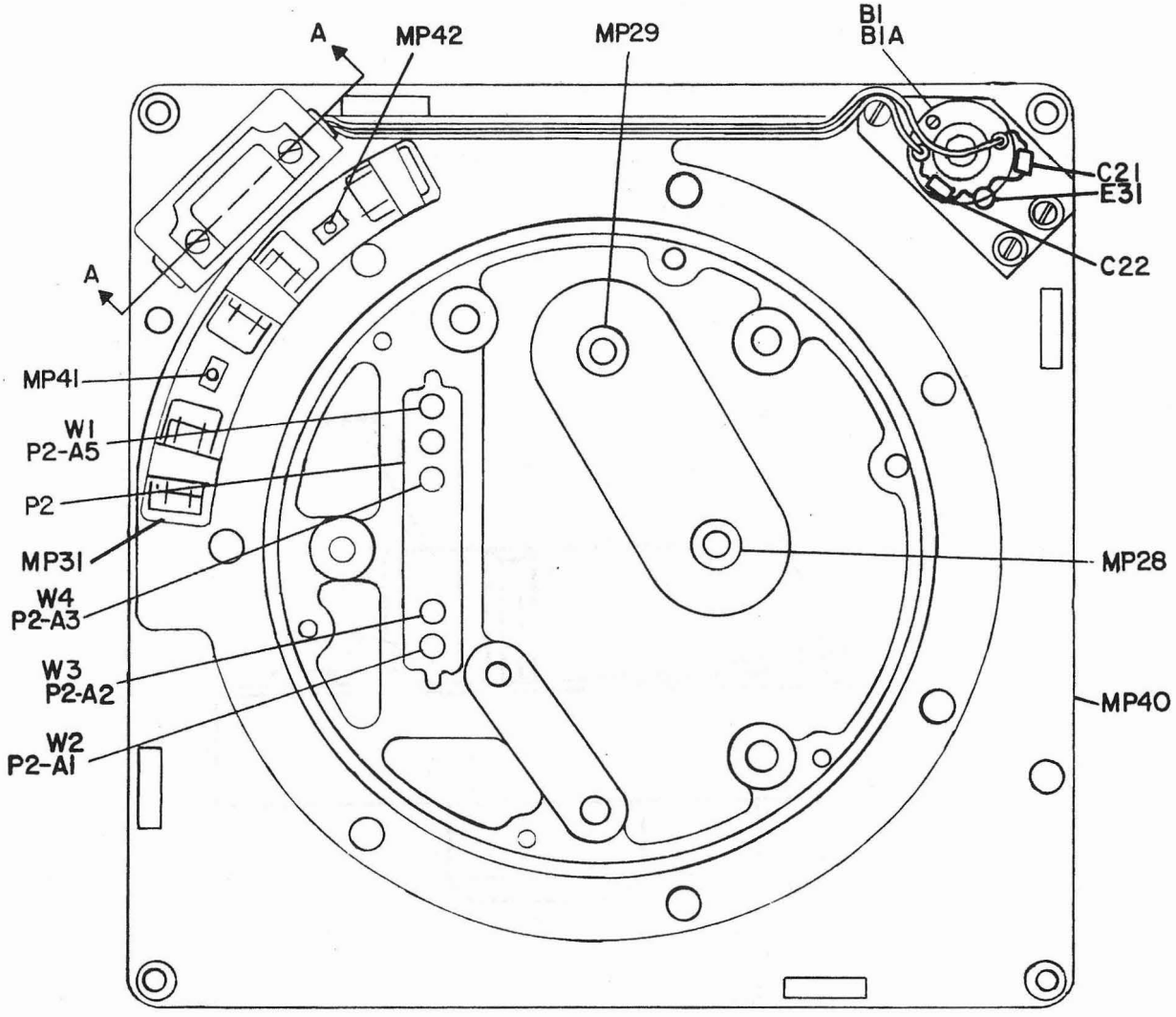

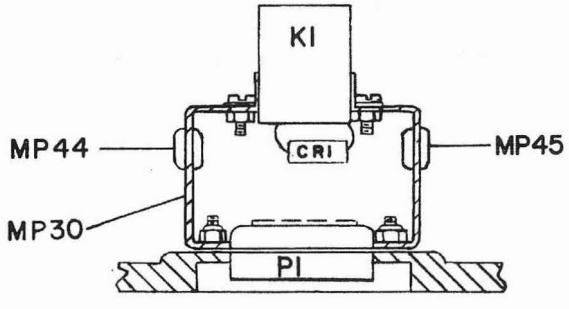

SECTION A-A

Figure 7-16. Mounting Base Assembly (A2A4MP40), Component Locations

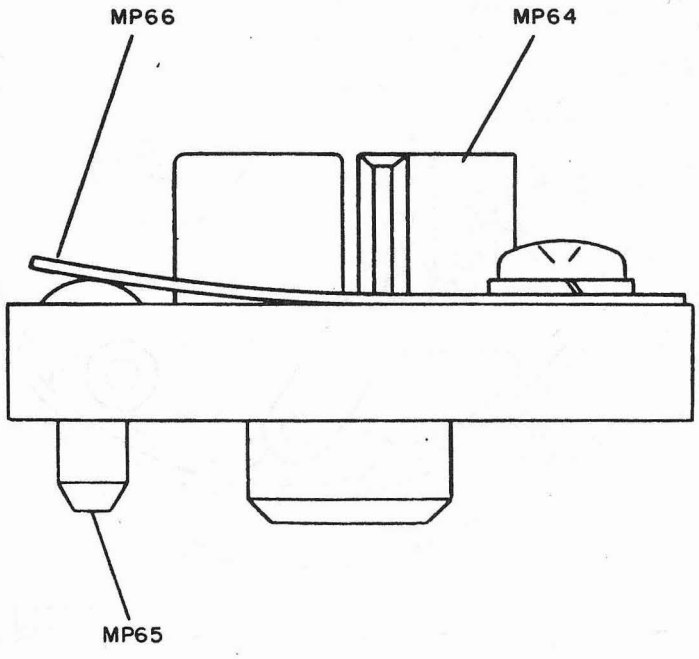

Figure 7-17. Top Coupling Assembly A2A4MP62 and A2A4MP63, Component Locations

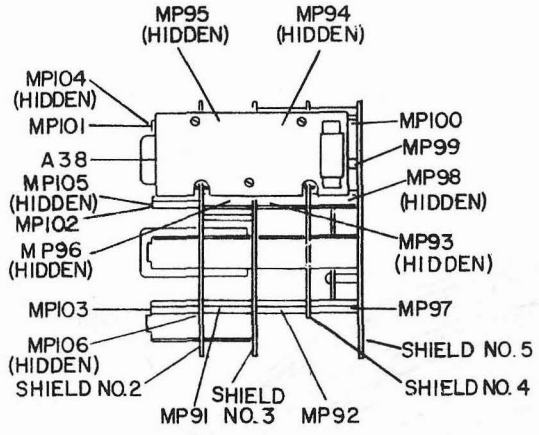

VEIW A

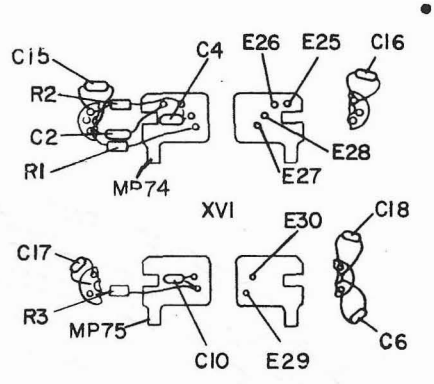

TUBE SOCKET & TUBE SOCKET SHIELD WIRING
VIEW B

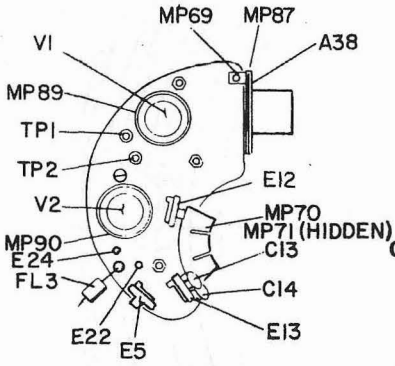

TOP SHIELD NO. 2
VIEW C

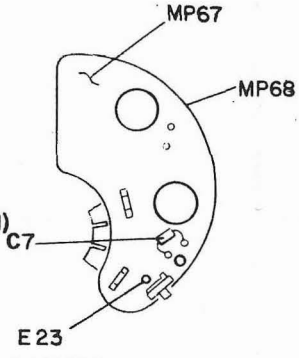

BOTTOM
VIEW D

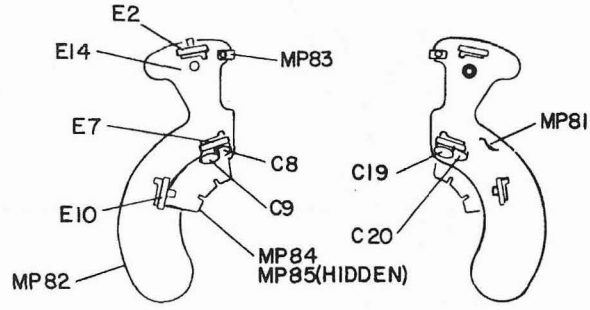

TOP SHIELD NO. 4
VIEW E

BOTTOM
VIEW F

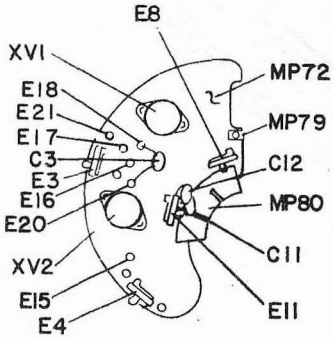

TOP SHIELD NO.3
VIEW G

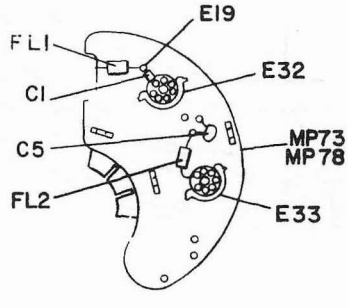

BOTTOM
VIEW H

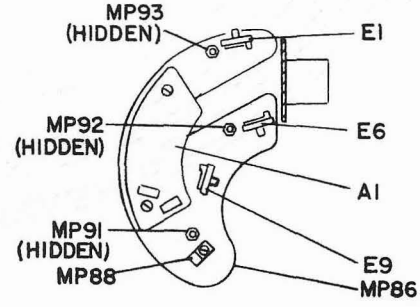

SHIELD NO.5
VIEW J

Figure 7-18. RF Chassis Assembly (P/O A2A4), Component Locations

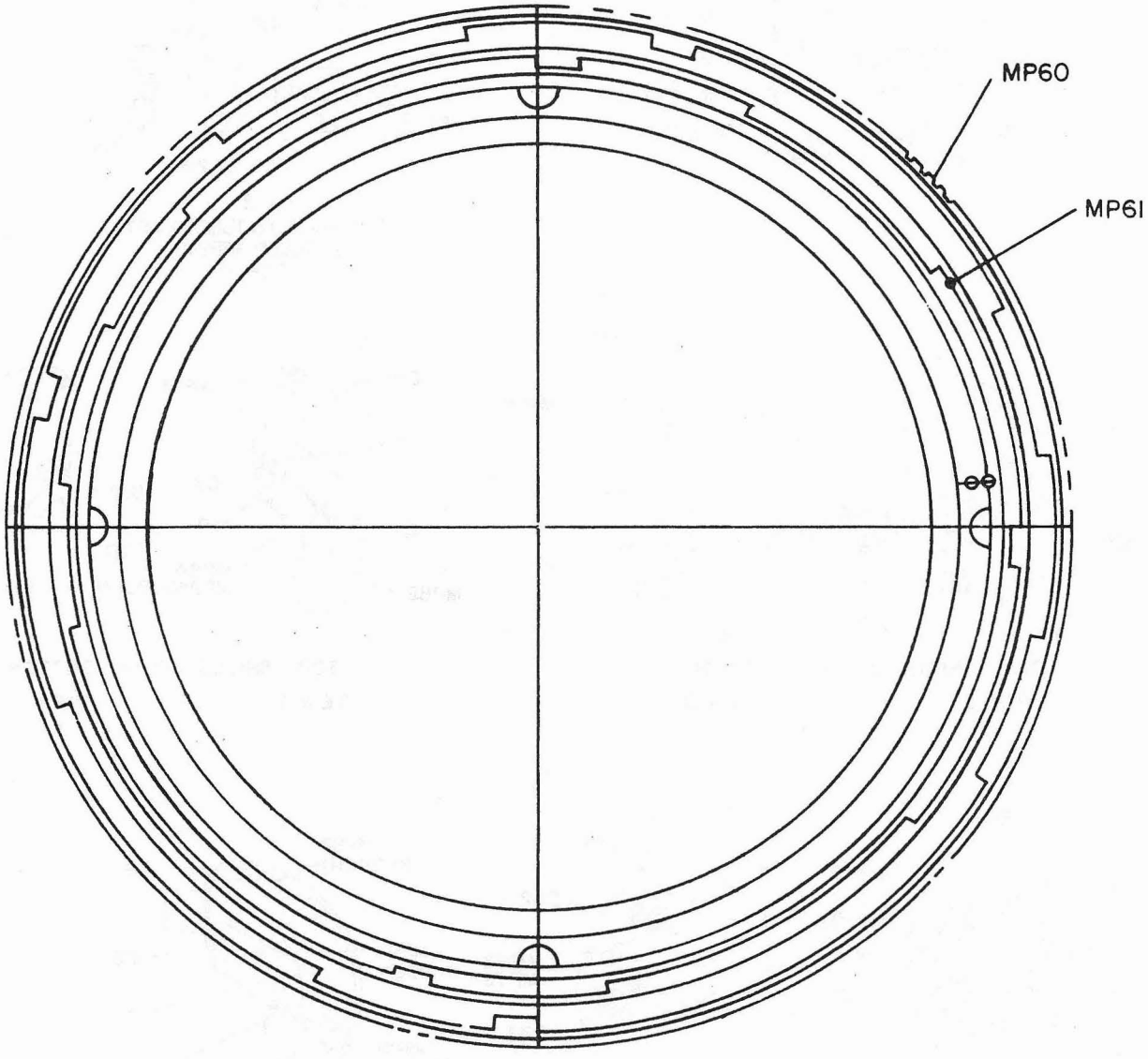

Figure 7-19. Turret Drive Gear Assembly (P/O A2A4), Component Locations

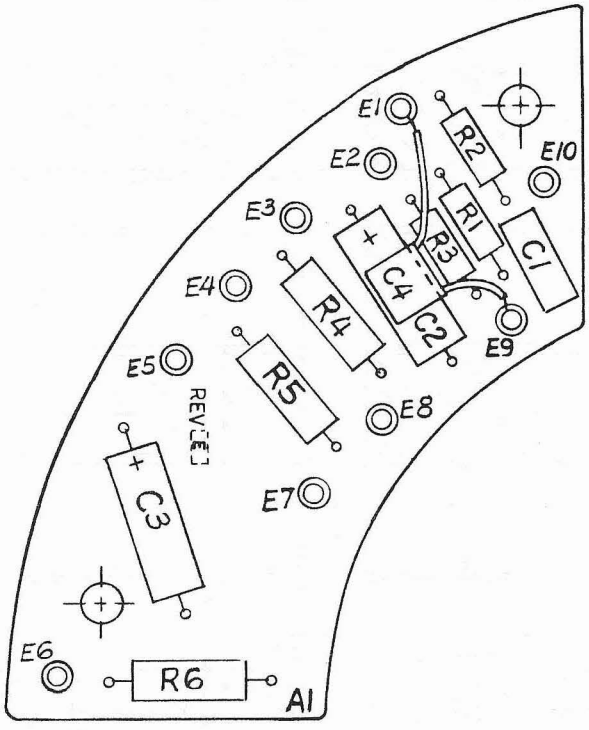

E1 thru E8 and E10 are wiring terminations and are shown for reference only.

Figure 7-20. RF Amplifier Subassembly A2A4A1, Component Locations

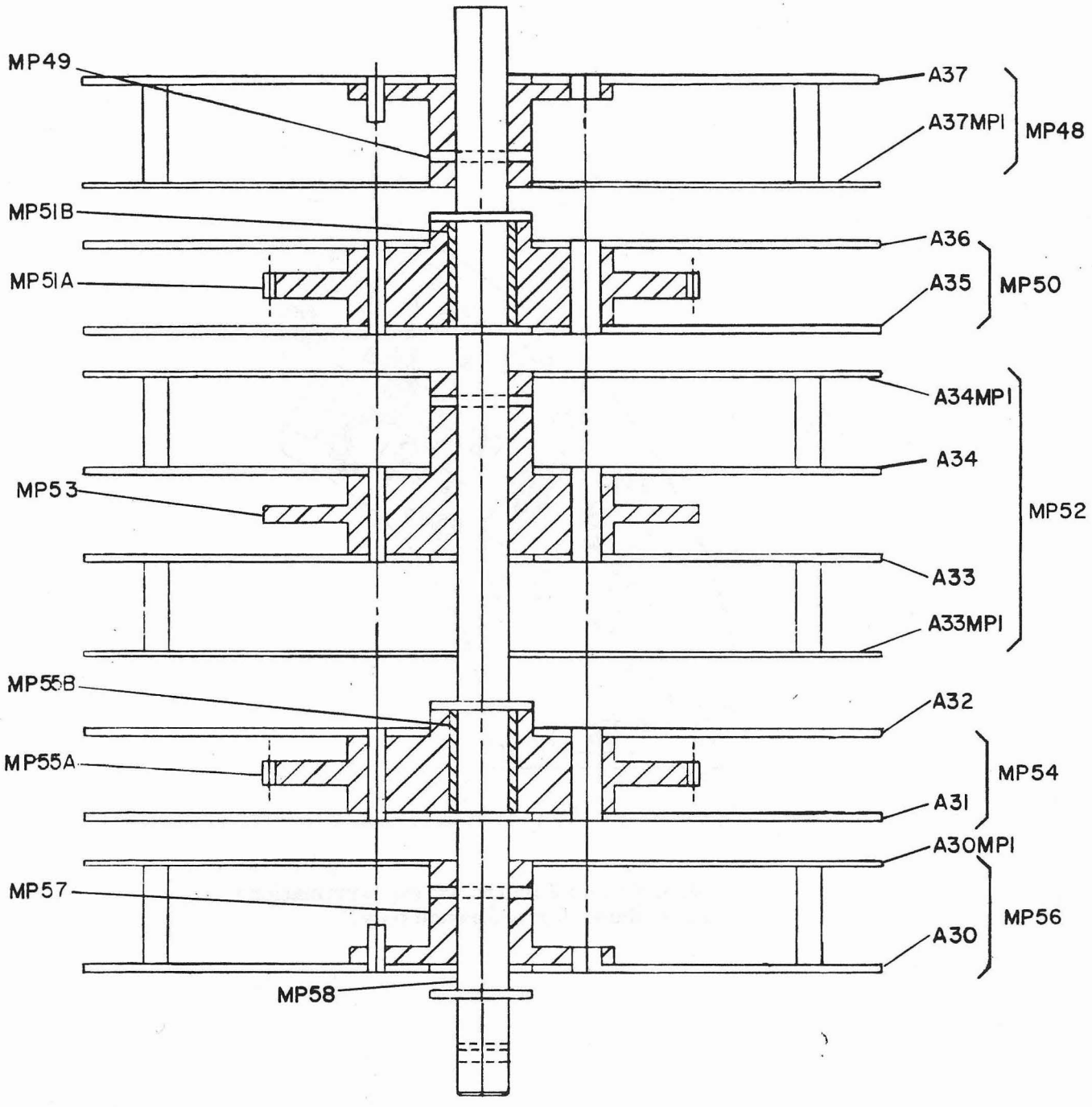

Figure 7-21. Tuning Rotor Assembly A2A4MP47, Component Locations

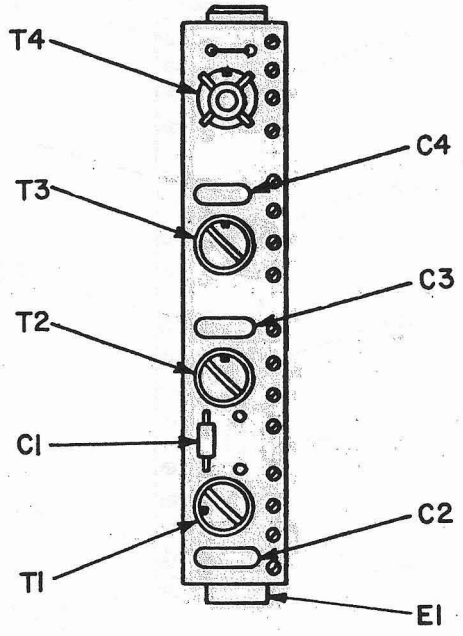

Figure 7-22. 12 MHz Subassembly A2A4A2, Component Locations

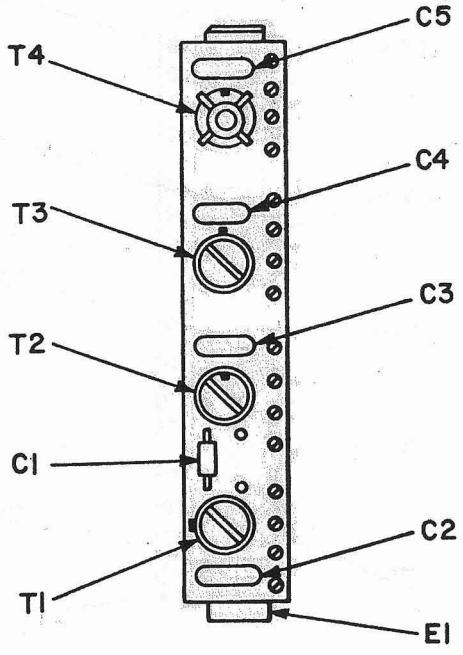

Figure 7-23. 13 MHz Subassembly A2A4A3, Component Locations

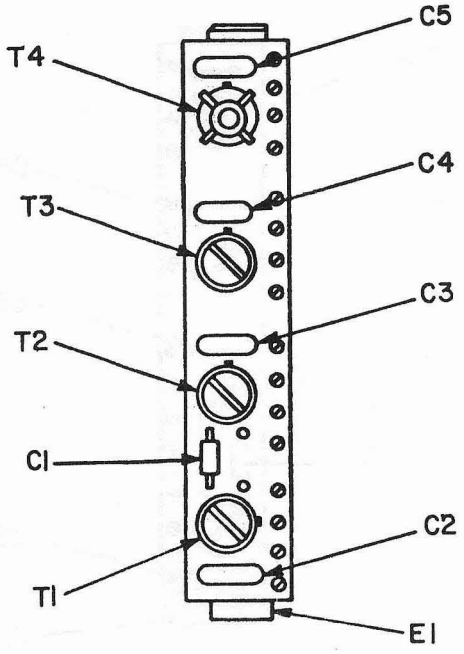

Figure 7-24. 14 MHz Subassembly A2A4A4, Component Locations

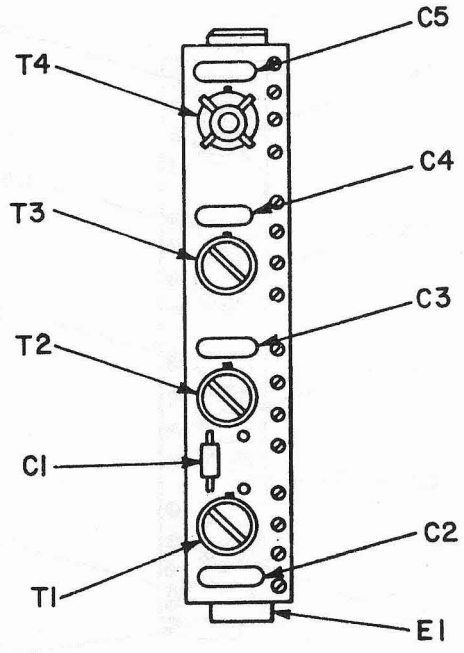

Figure 7-25. 15 MHz Subassembly A2A4A5, Component Locations

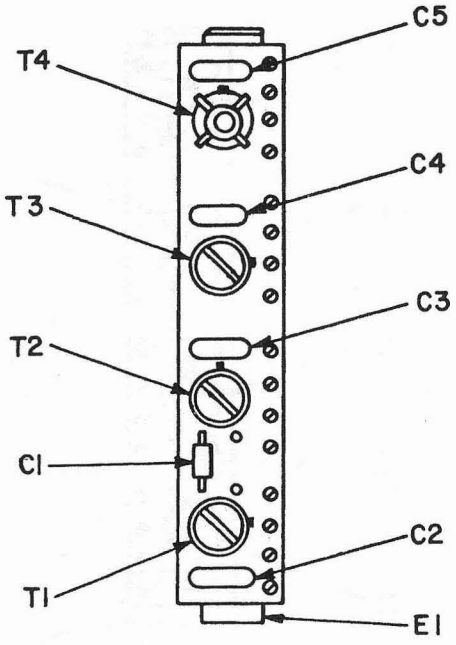

Figure 7-26. 16 MHz Subassembly A2A4A6, Component Locations

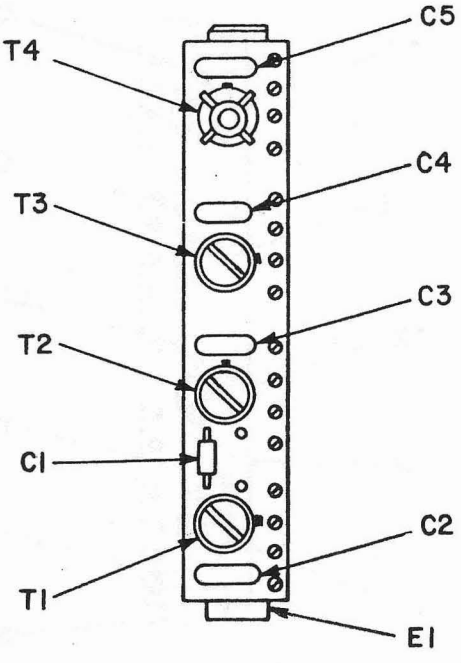

Figure 7-27. 17 MHz Subassembly A2A4A7, Component Locations

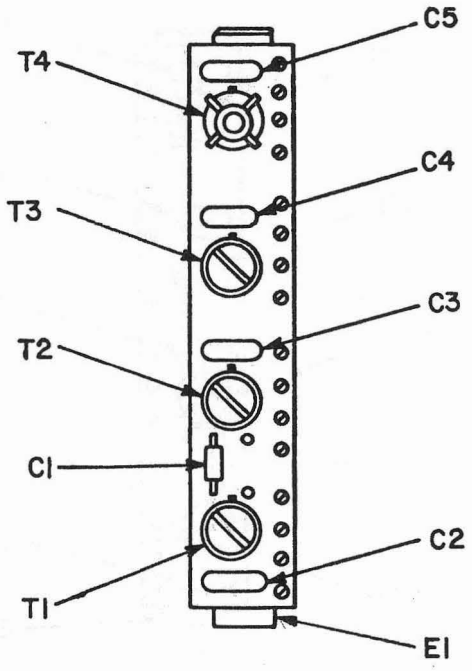

Figure 7-28. 18 MHz Subassembly A2A4A8, Component Locations

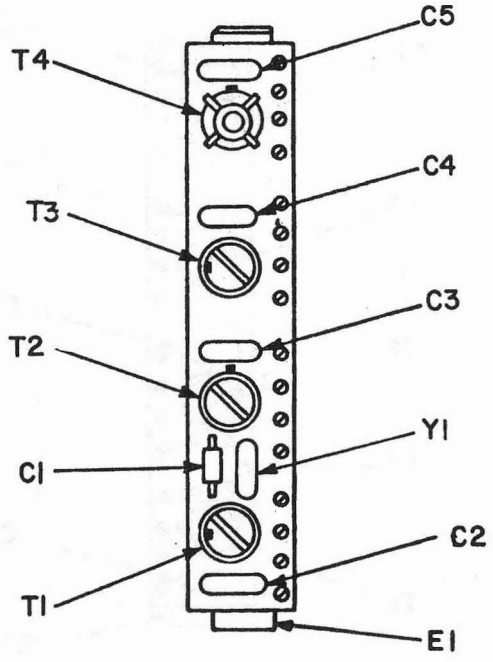

Figure 7-29. 19 MHz Subassembly A2A4A9, Component Locations

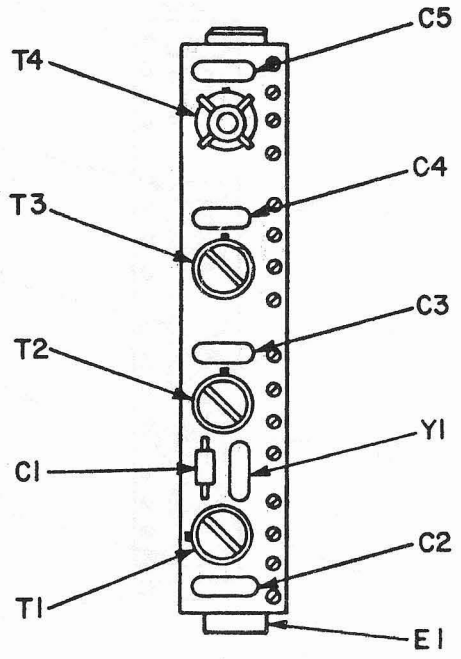

Figure 7-30. 20 MHz Subassembly A2A4A10, Component Locations

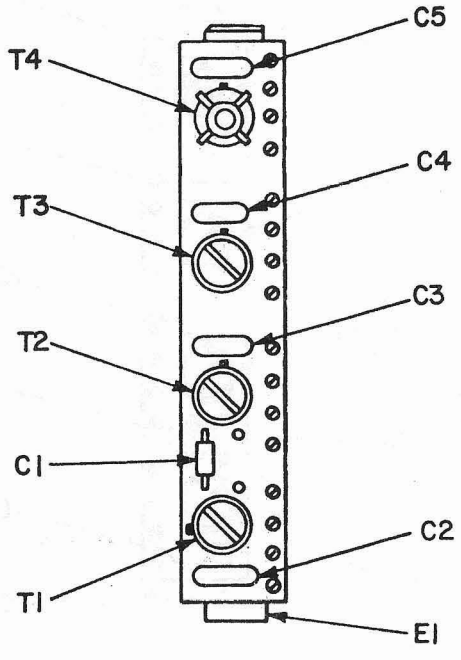

Figure 7-31. 21 MHz Subassembly A2A4A11, Component Locations

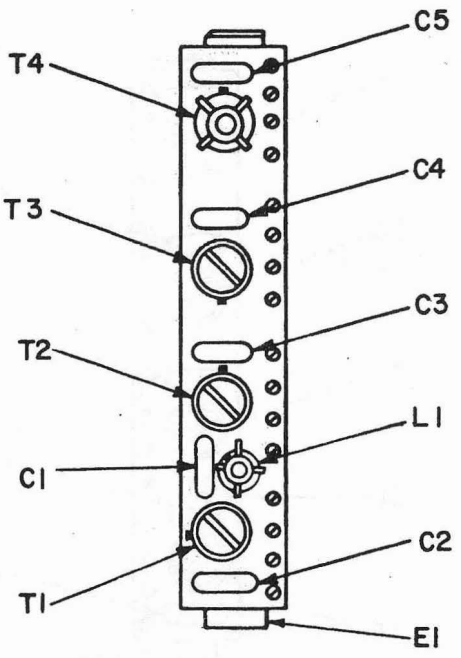

Figure 7-32. 22 MHz Subassembly A2A4A12, Component Locations

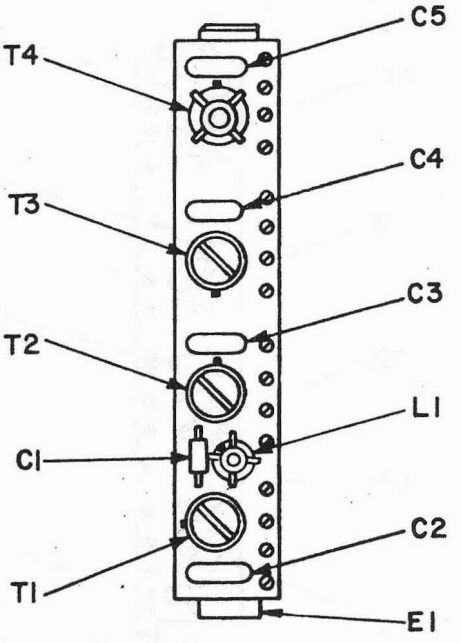

Figure 7-33. 23 MHz Subassembly A2A4A13, Component Locations

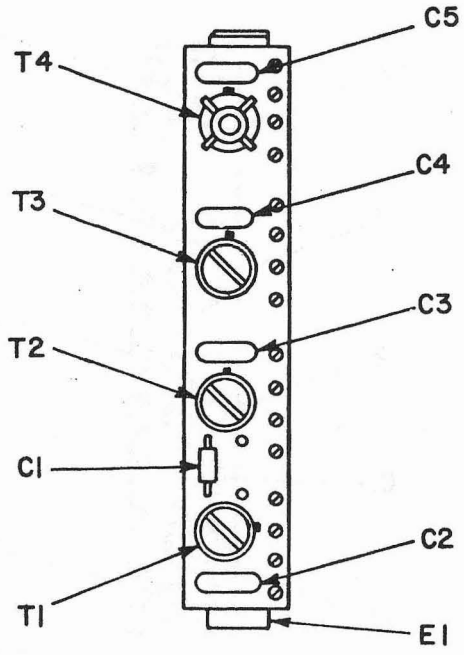

Figure 7-34. 24 MHz Subassembly A2A4A14, Component Locations

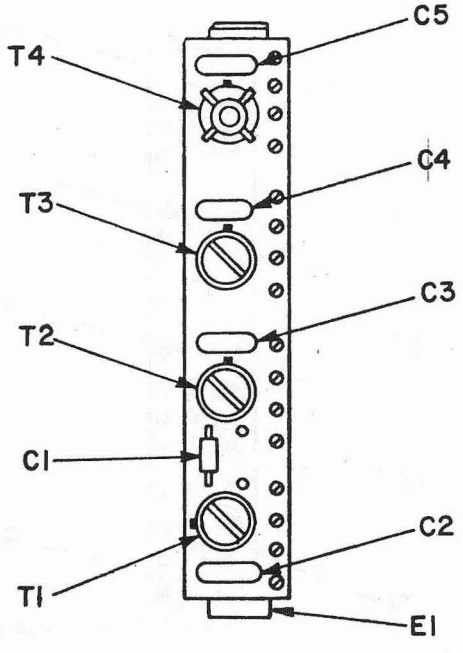

Figure 7-35. 25 MHz Subassembly A2A4A15, Component Locations

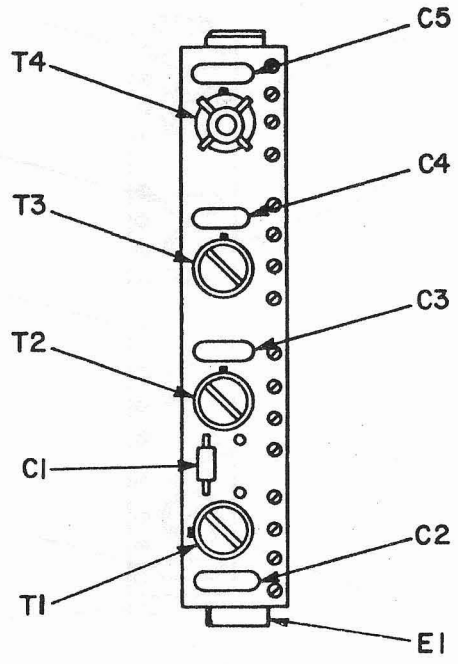

Figure 7-36. 26 MHz Subassembly A2A4A16, Component Locations

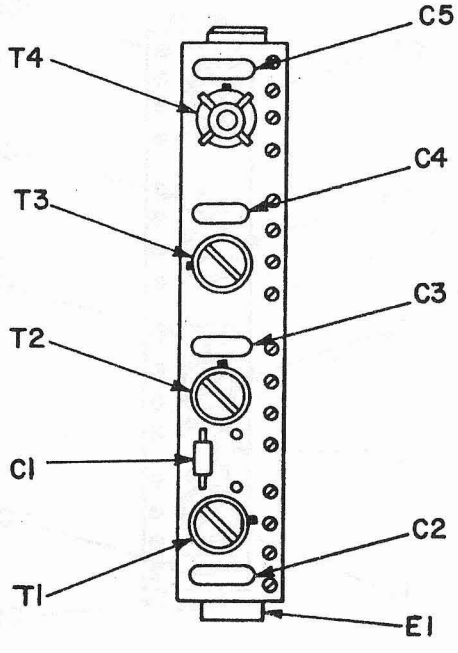

Figure 7-37. 27 MHz Subassembly A2A4A17, Component Locations

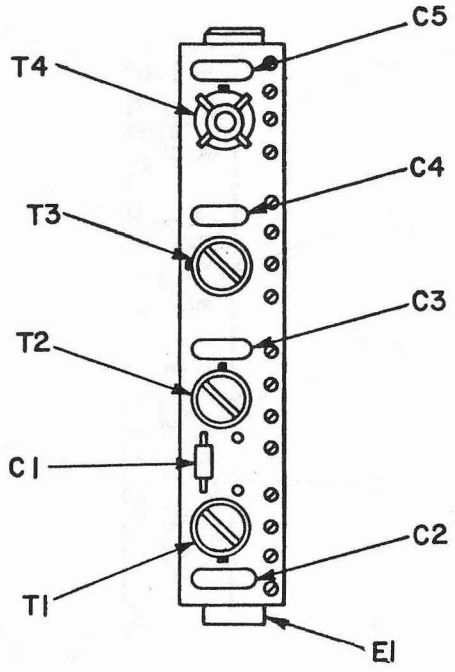

Figure 7-38. 28 MHz Subassembly A2A4A18, Component Locations

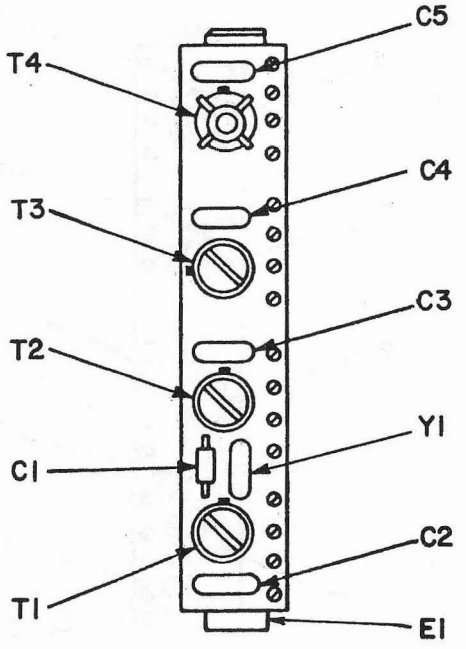

Figure 7-39. 29 MHz Subassembly A2A4A19, Component Locations

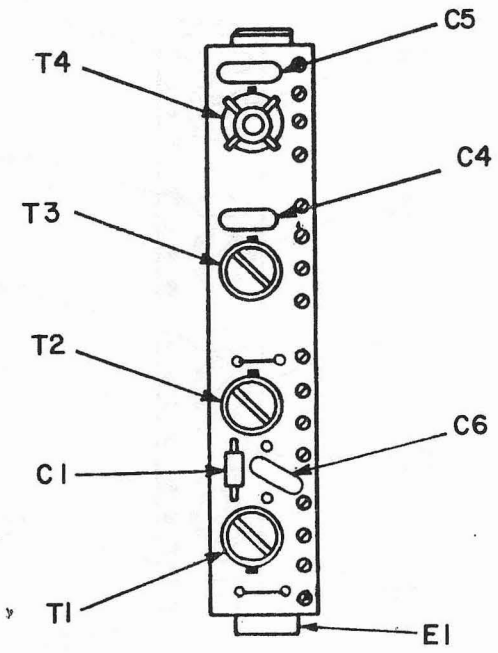

Figure 7-40. 2 MHz Subassembly A2A4A20, Component Locations

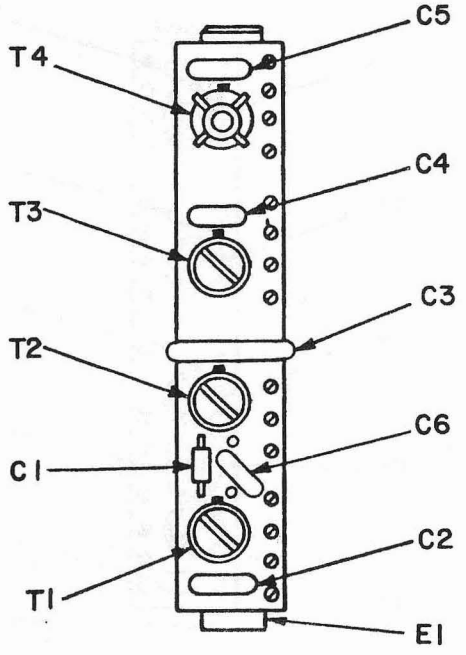

Figure 7-41. 3 MHz Subassembly A2A4A21, Component Locations

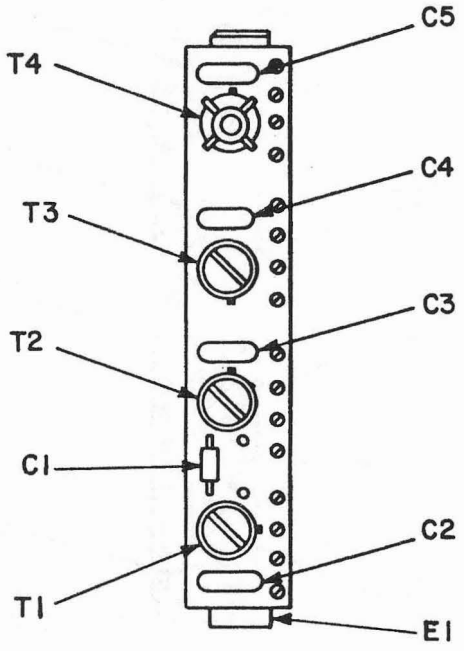

Figure 7-42. 4 MHz Subassembly A2A4A22, Component Locations

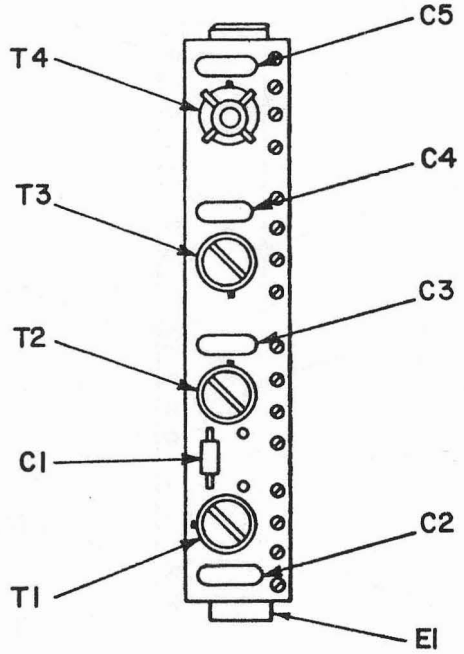

Figure 7-43. 5 MHz Subassembly A2A4A23, Component Locations

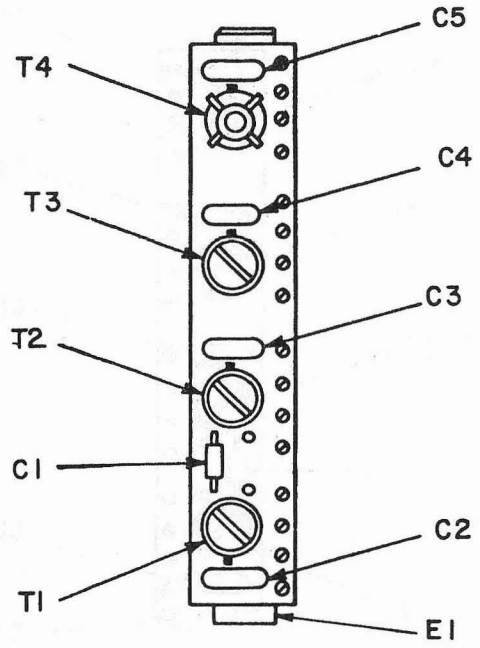

Figure 7-44. 6 MHz Subassembly A2A4A24, Component Locations

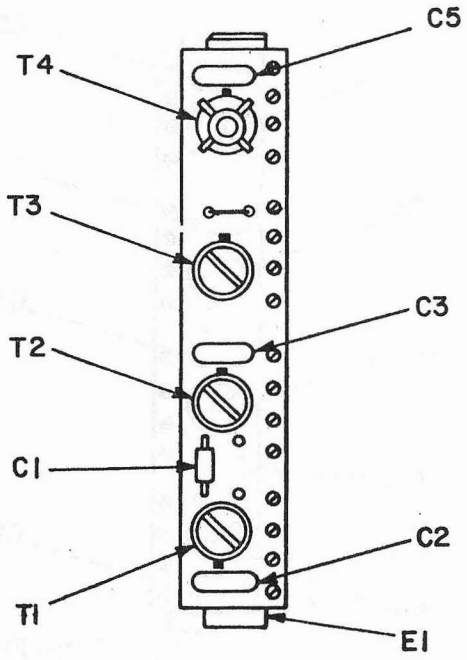

Figure 7-45. 7 MHz Subassembly A2A4A25, Component Locations

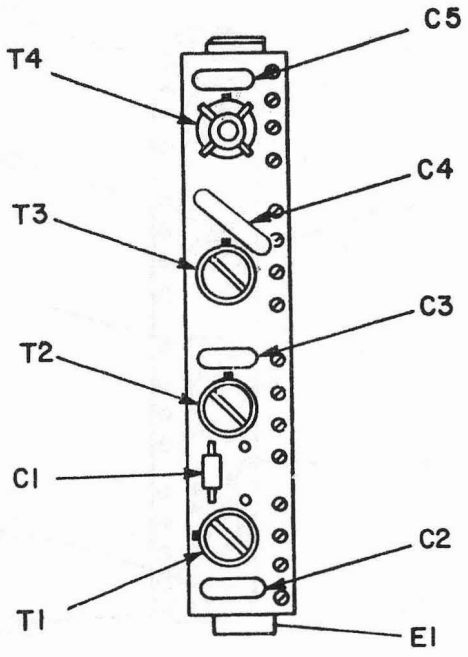

Figure 7-46. 8 MHz Subassembly A2A4A26, Component Locations

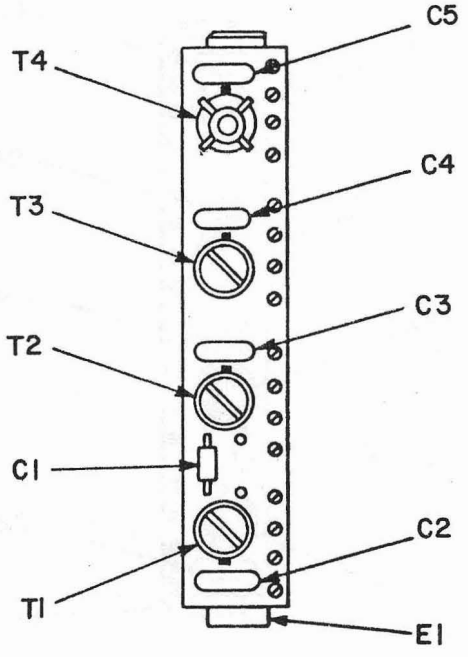

Figure 7-47. 9 MHz Subassembly A2A4A27, Component Locations

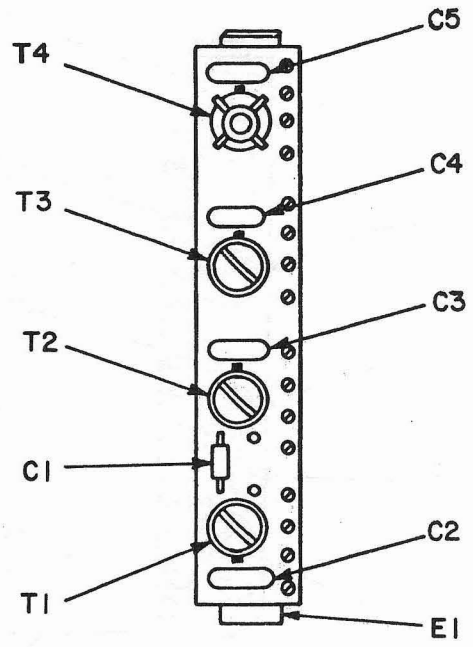

Figure 7-48. 10 MHz Subassembly A2A4A28, Component Locations

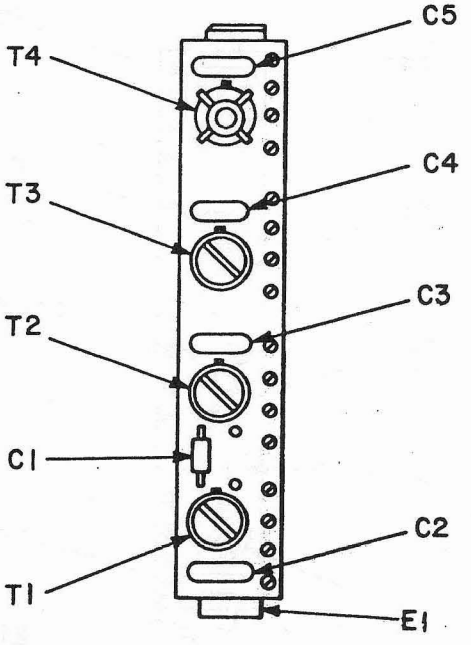

Figure 7-49. 11 MHz Subassembly A2A4A29, Component Locations

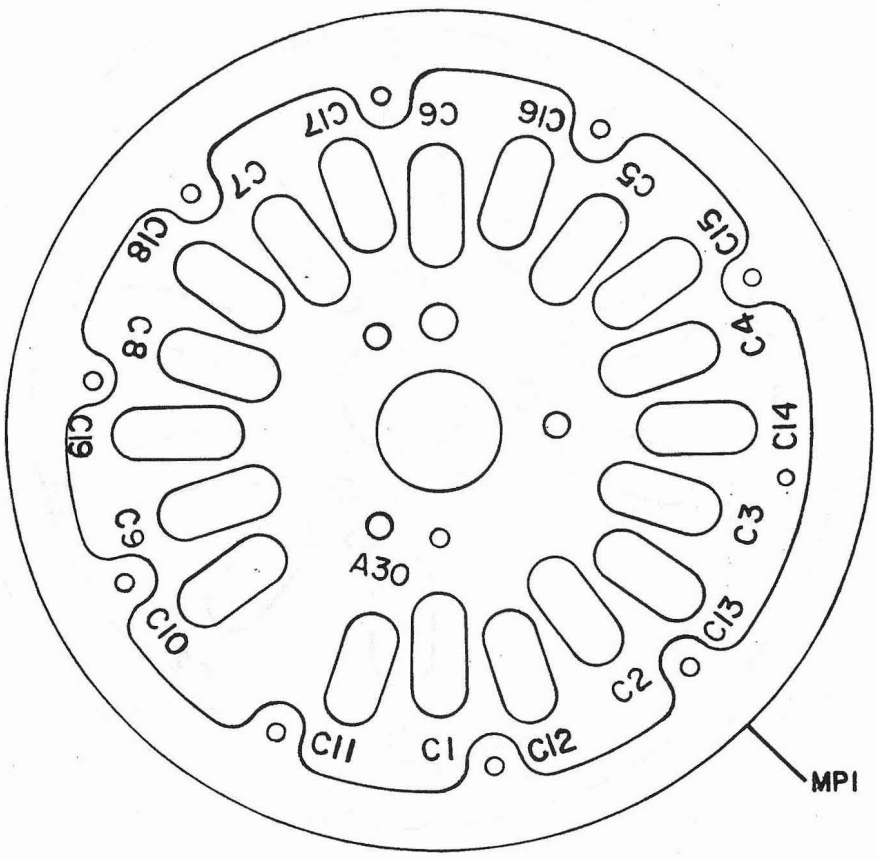

Figure 7-50. 100 kHz Rotor Subassembly A2A4A30, Component Locations

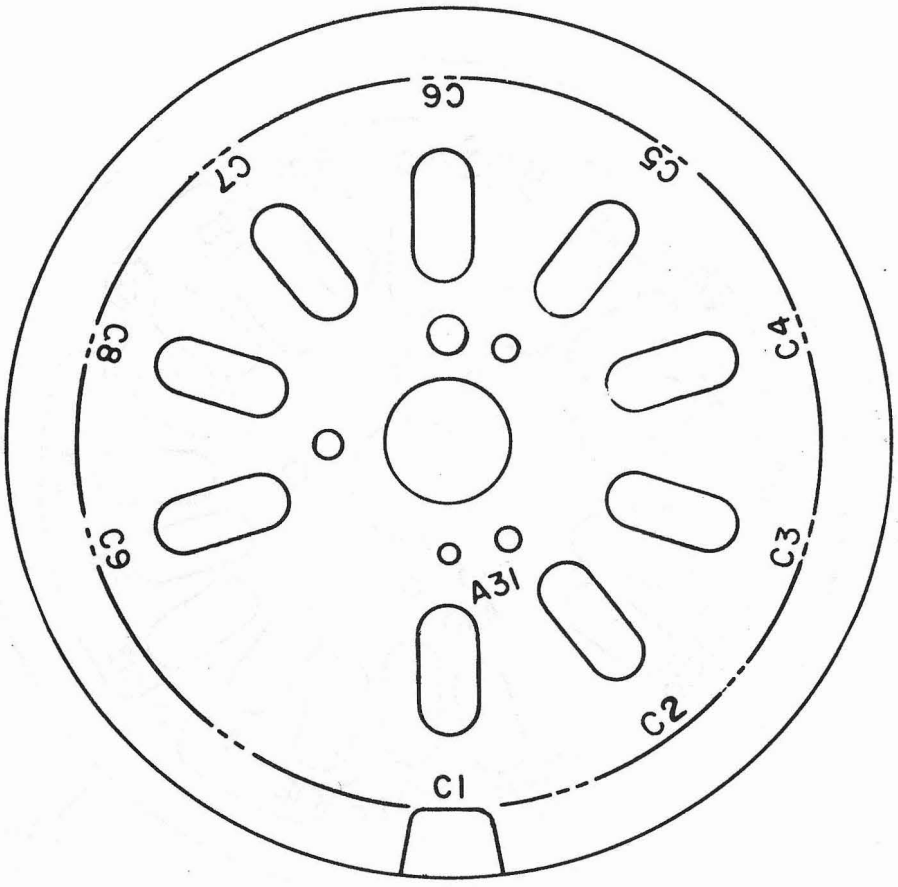

Figure 7-51. 10 kHz Rotor Subassembly A2A4A31, Component Locations

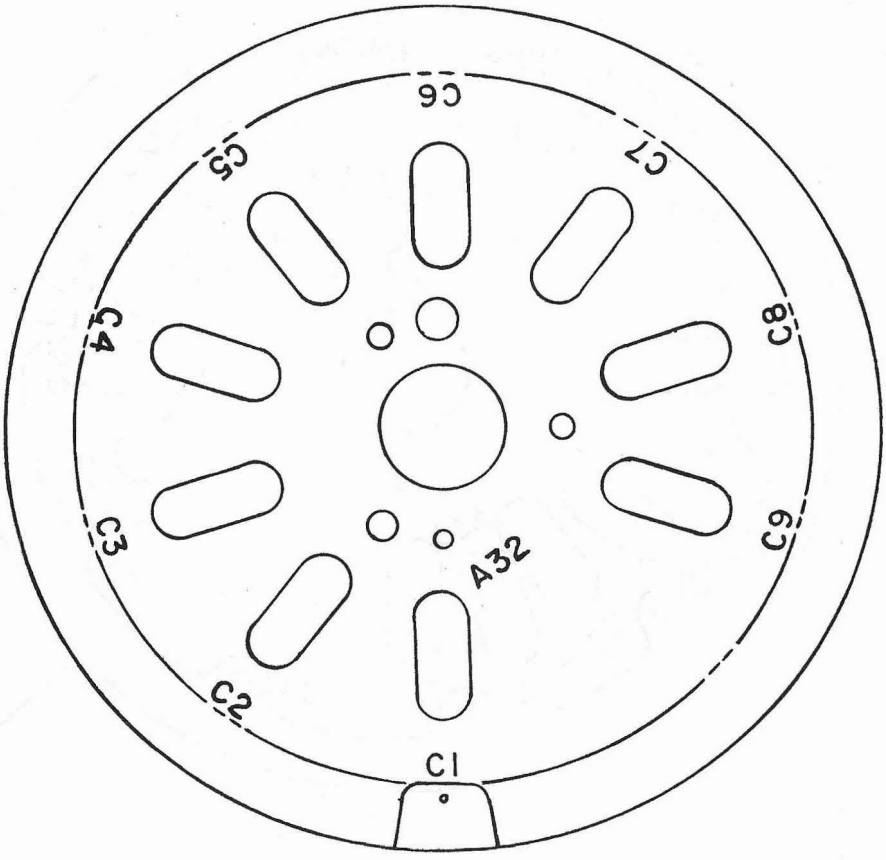

Figure 7-52. 10 kHz Rotor Subassembly A2A4A32, Component Locations

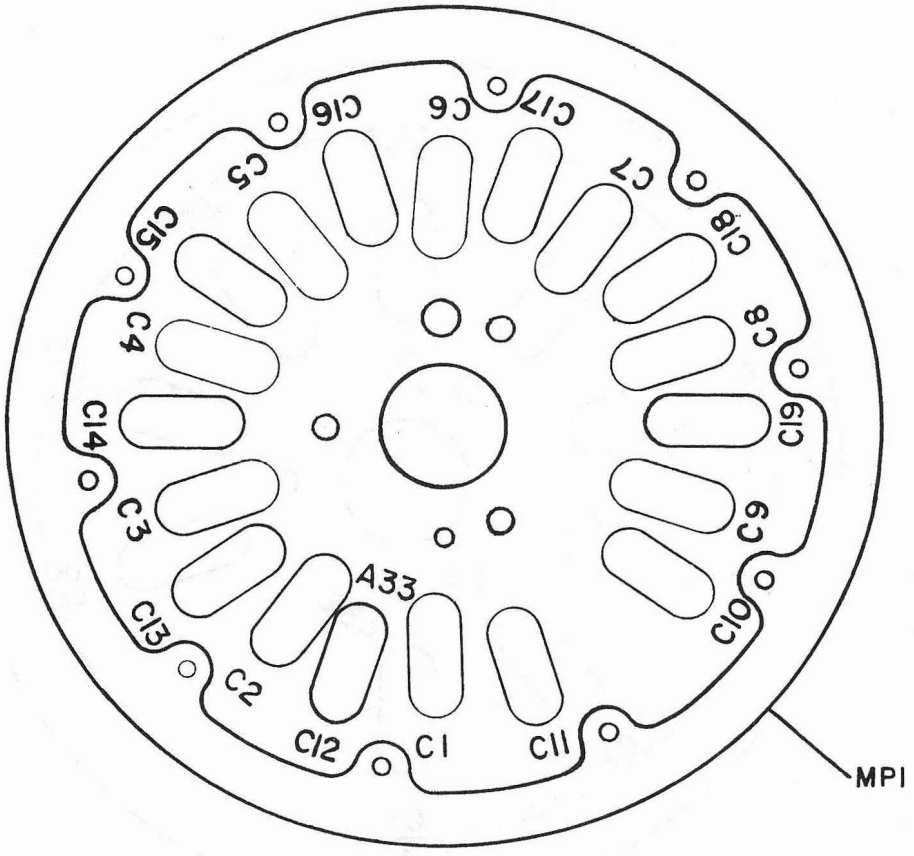

Figure 7-53. 100 kHz Rotor Subassembly A2A4A33, Component Locations

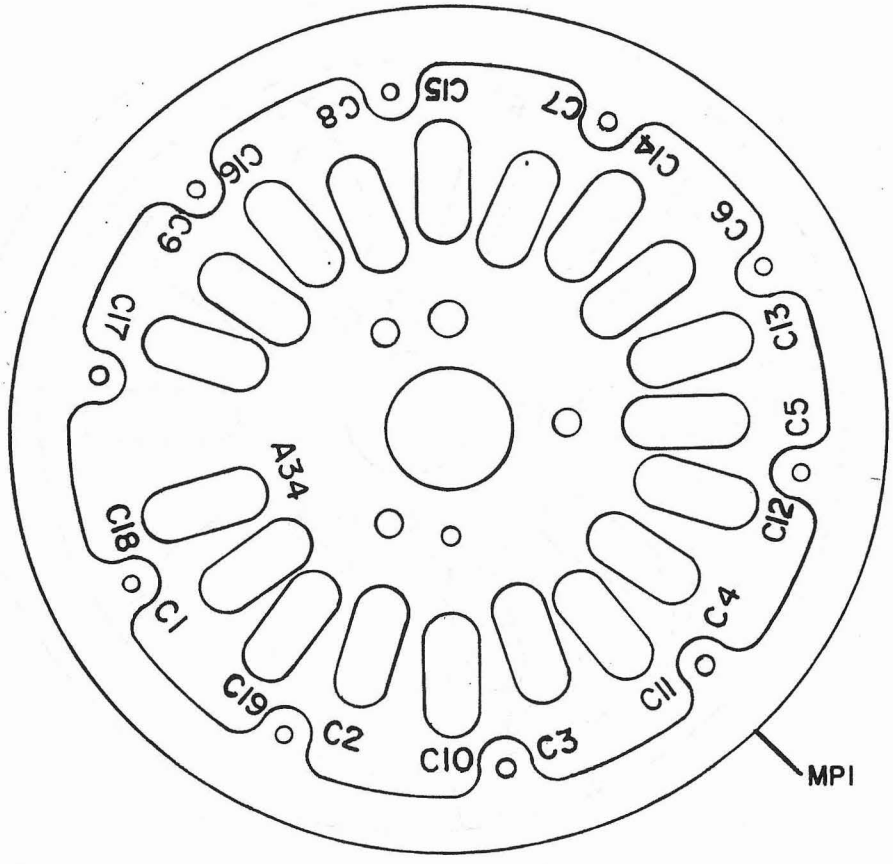

Figure 7-54. 100 kHz Rotor Subassembly A2A4A34, Component Locations

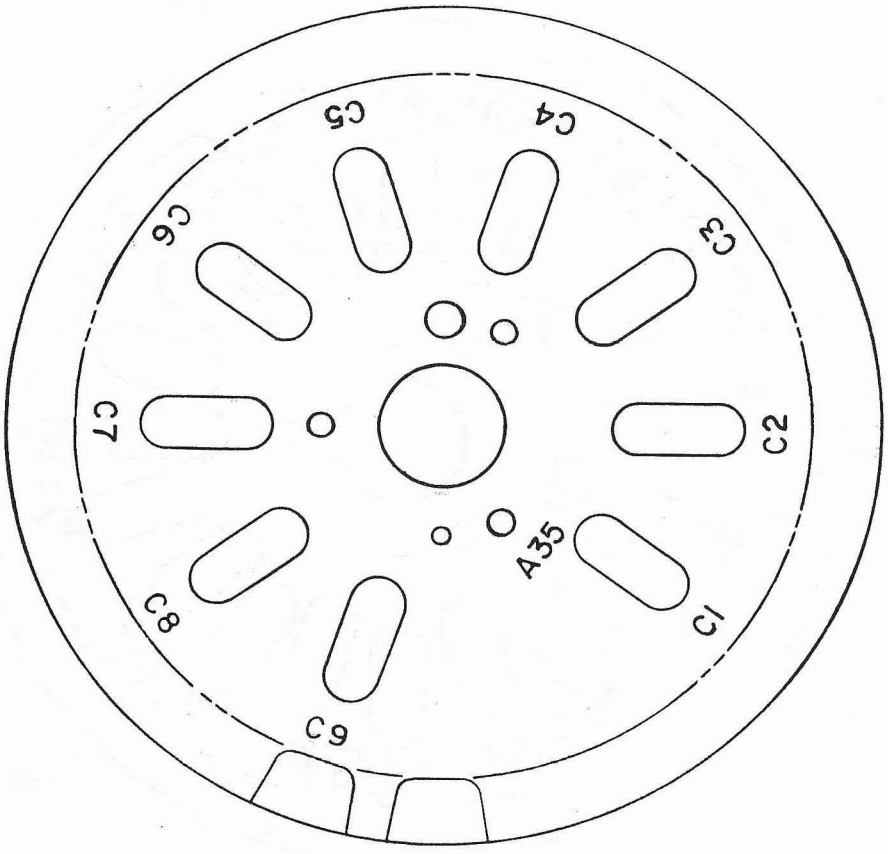

Figure 7-55. 100 kHz Rotor Subassembly A2A4A35, Component Locations

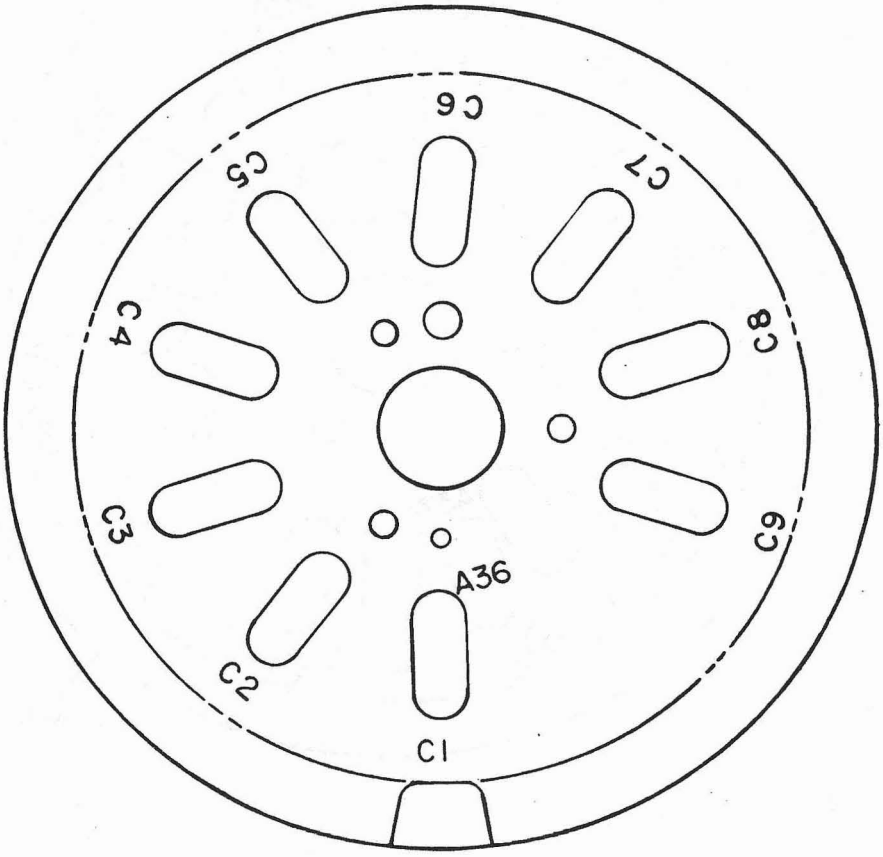

Figure 7-56. 10 kHz Rotor Subassembly A2A4A36, Component Locations

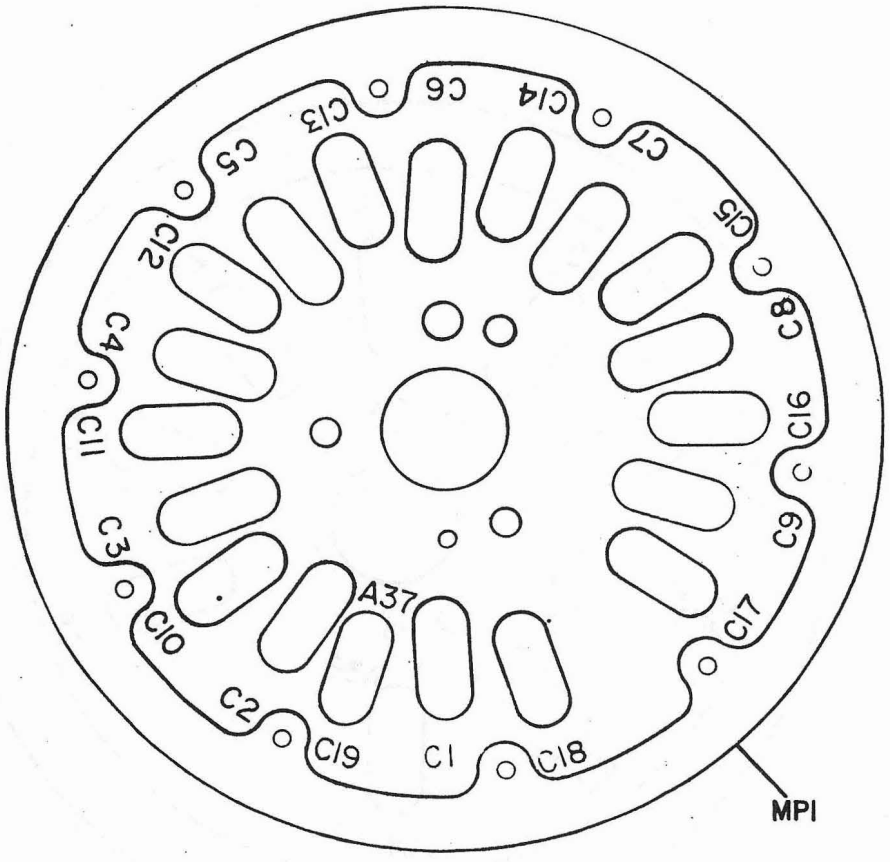

Figure 7-57. 100 kHz Rotor Subassembly A2A4A37, Component Locations

PART LOCATION INDEX FOR FIGURE 7-58.

REF DES	ZONE	REF DES	ZONE	REF DES	ZONE
A2A4A38C1	3G	** A2A4A38E5	4E	A2A4A38R9	3F
C2	2F	** E6	2C	R10	3F
C3	2H	FL1	2G	R11	3F
C4	2H	FL2	3E	R12	2F
C5	4F	FL3	3D	R13	3F
C6	2E	K1	2C,3C	R14	3E
C7	3E	L1	3E	R15	1F
C8	2F	Q1	2G	R16	2E
C9	3E	Q2	2F	R17	3D
C10	2E	Q3	2D	R18	2E
C11	1G	R1	3G	R19	2D
C12	3F	R2	2G	R20	3D
C13	2E	R3	2G	R21	1H
C14	3G	R4	2G	TP1	3H
E1	2A	R5	2H	TP2	4H
E2	*	R6	3H	W1	2G
** E3	3G	R7	2F	W2	2B,2C
** E4	4G	R8	*	W2P1	2A,3A

* NOT USED
** WIRING TERMINATION - FOR REFERENCE ONLY.

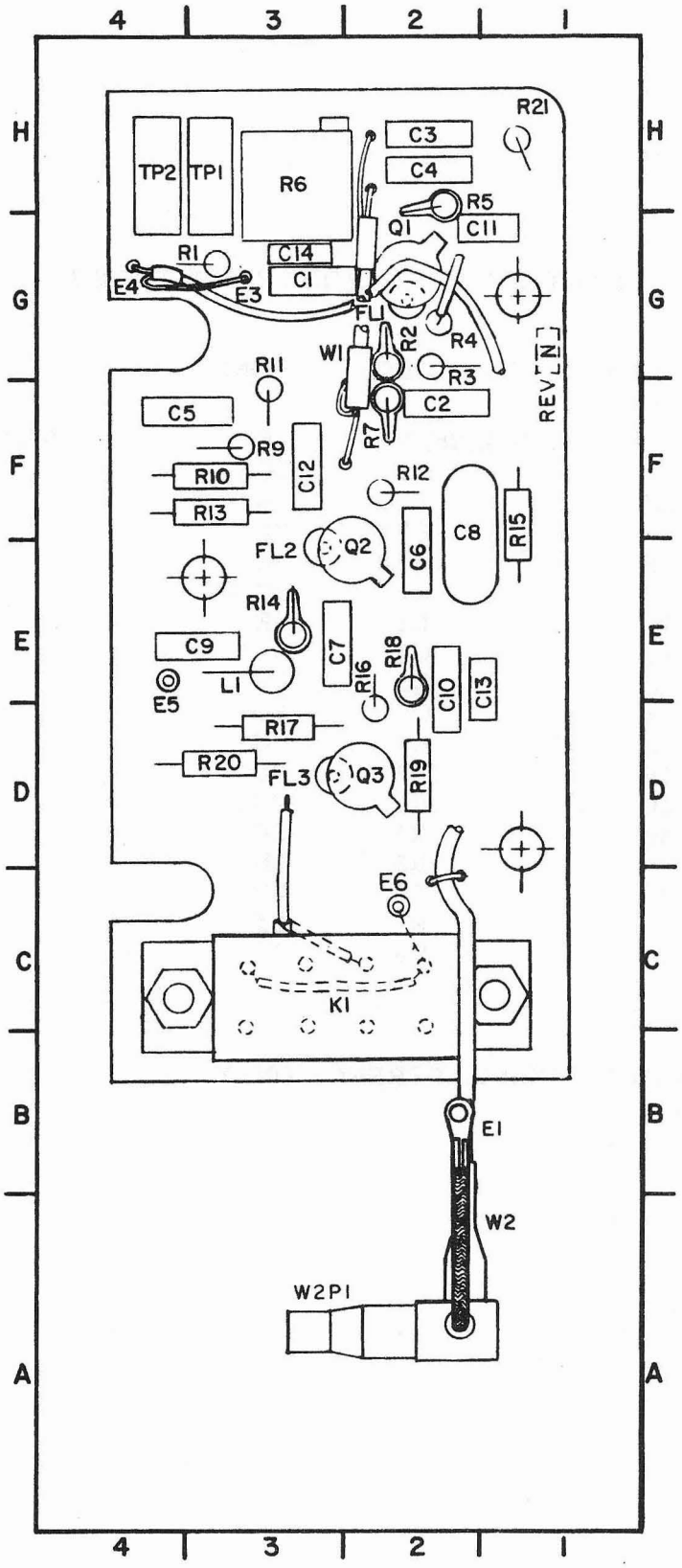

Figure 7-58. RF Mixer Amplifier Subassembly A2A4A38, Component Locations

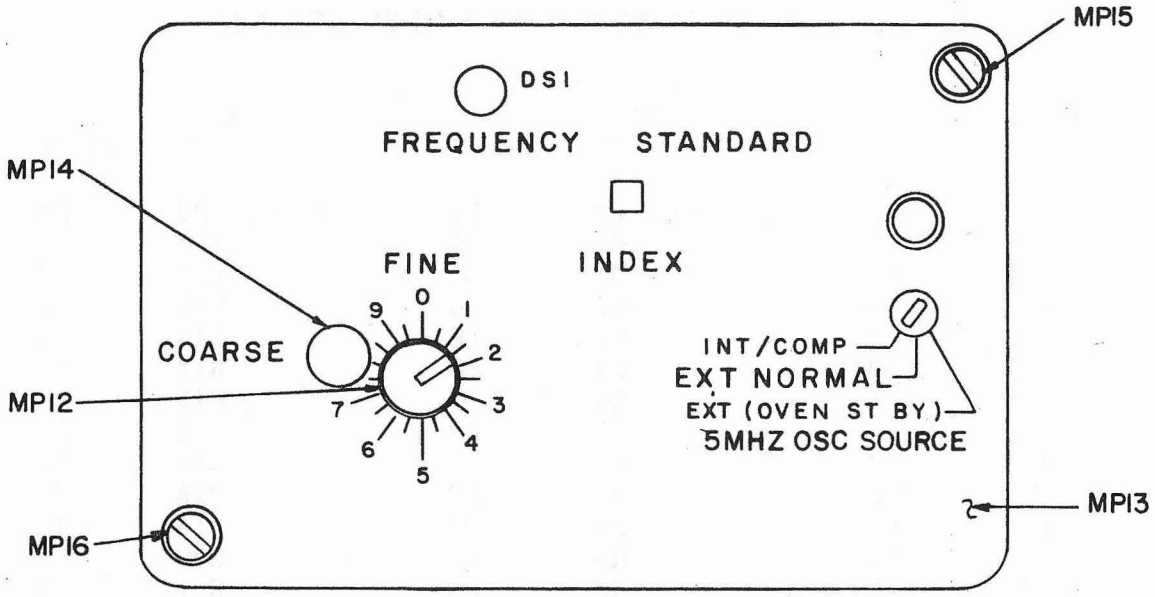

Figure 7-59. Frequency Standard Assembly A2A5, Component Locations

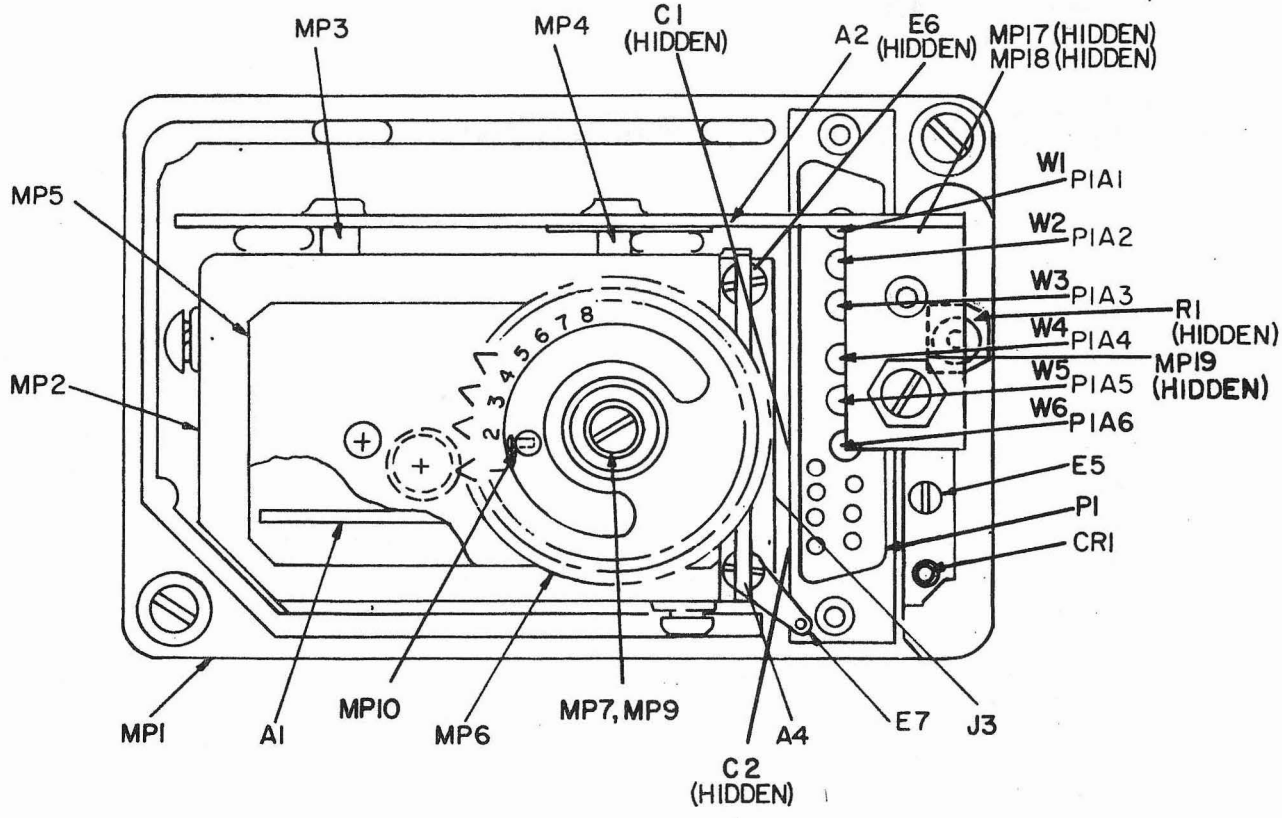

Figure 7-60. Frequency Standard Assembly A2A5, Housing Removed, Top View, Component Locations

PART LOCATION INDEX FOR FIGURE 7-61

REF. DES.	ZONE	REF. DES.	ZONE	REF. DES.	ZONE
A2A5A1C1	1C	A2A5A1MP3	3D	A2A5A1R9	2A
C2	1C,1D	MP4	2D	R10	1C
C3	1D	Q1	1C	R11	1B
C4	1C	Q2	2B	R12	1A
C5	2B	Q3	1B	R13	2B
C6	2B	Q4	3B	R14	3C
C7	1A	Q5	3C	R15	3D
C8	2C	Q6	2B	R16	3C
C9	*	Q7	3B	R17	3B
C10	1C	R1	2C	R18	3B
C11	1C	R2	1C	R19	3C
CR1	1B	R3	2C	R20	3A
CR2	1B	R4	2C	R21	2A
**E1	2C	R5	2B	R22	3B
E2	2C	R6	2B	R23	3A
E3	3C	R7	2C	R24	2B
MP1	3C	R8	1A	Y1	2D,3D
MP2	2D				

* NOT USED
** WIRING TERMINATION - FOR REFERENCE ONLY

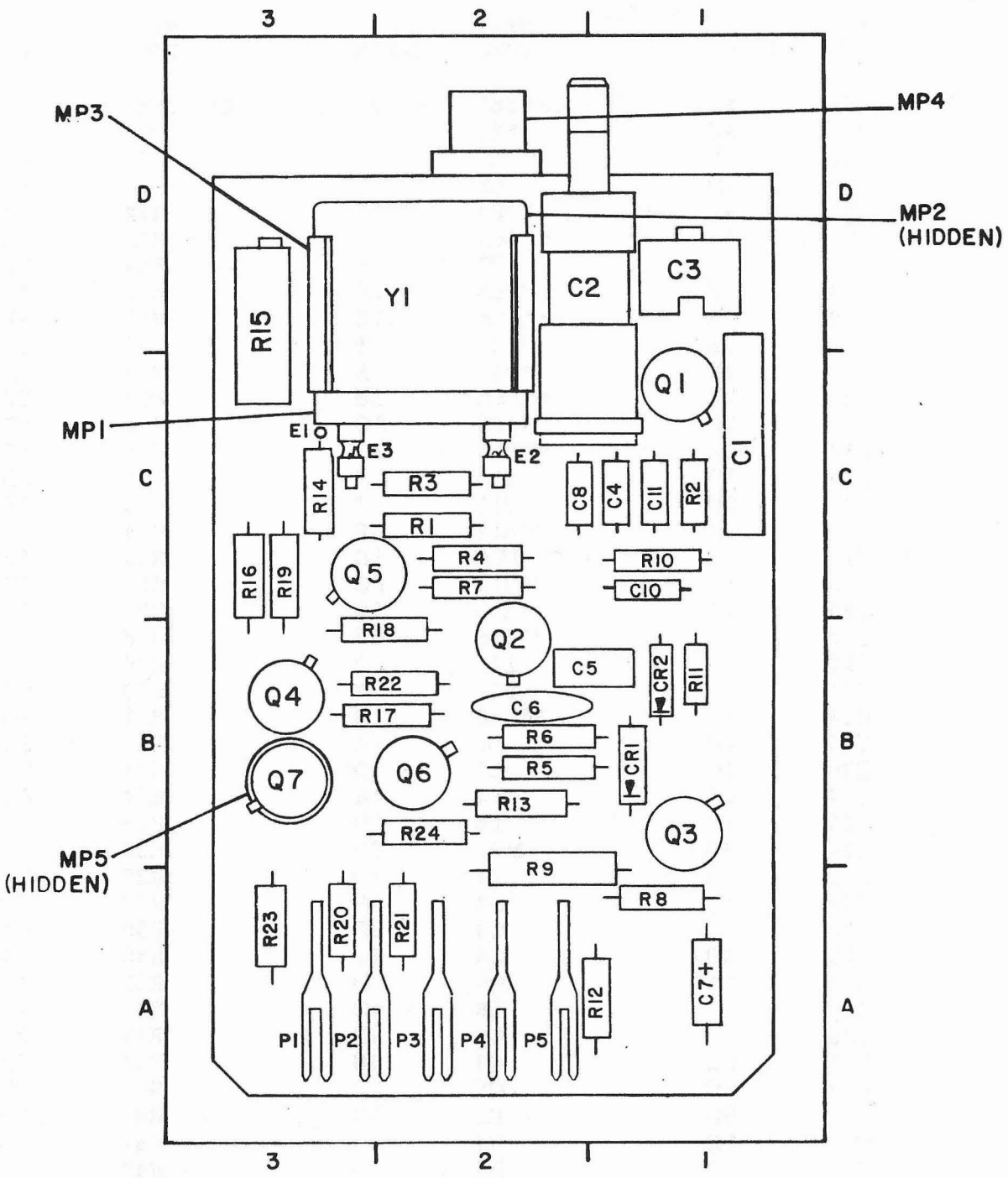

Figure 7-61. Oscillator and Oven Control Subassembly A2A5A1, Component Locations

PART LOCATION INDEX FOR FIGURE 7-62

REF. DES.	ZONE	REF. DES.	ZONE	REF. DES.	ZONE
A2A5A2C1	4D	**A2A5A2E1	2B	A2A5A2R8	5E
C2	3C	**E2	1B	R9	3D
C3	5E	**E2A	2C	R10	4F
C4	3D	E3	*	R11	3F
C5	4E	**E4	1B	R12	5F
C6	6F	**E4A	1C	R13	3E
C7	4F	E5	*	R14	3F
C8	4E	**E6	1F	R15	3F
C9	4E	**E6A	11E	R16	3E
C10	3E	E7	*	R17	3F
C11	3F	**E8	2A	R18	2F
C12	2F	**E8A	2B	R19	2E
C13	2F	**E9	3C	R20	2E
C14	3E	**E9A	3C	R21	1E
C15	3D	E10	*	R22	2D
C16	2D	E11	*	R23	2E
C17	1D	**E12	5E	R24	1E
C18	1D	**E12A	5D	R25	1E
C19	1D	**E13	6C	R26	2D
C20	2C	**E14	6B	R27	2D
C21	3C	**E15	6B	R28	1D
C22	2C	E16	*	R29	2D
C23	3C	E17	*	R30	1D
C24	4B	**E18	6B	R31	2C
C25	4C	L1	4E	R32	3D
C26	3C	L2	2D	R33	5A
C27	4C	L3	4A	R34	4C
C28	3C	L4	5D	R35	*
C29	4B	MP1	6B	R36	5B
C30	4B	Q1	4D	R37	3C
C31	4A	Q2	5F	R38	4B
C32	3A	Q3	3E	R39	4A
C33	3B	Q4	2E	R40	3A
C34	3A	Q5	2D	R41	3A
C35	4C	Q6	4C	R42	3A
C36	5B	Q7	4B	R43	3B
C37	5C	Q8	3B	R44	2B
C38	5C	Q9	5C	R45	5C
C39	5D	R1	3D	R46	5D
C40	5D	R2	3D	R47	5C
C41	*	R3	4D	R48	5B
C42	*	R4	5D	R49	5D
C43	*	R5	5F	R50	*
C44	5F	R6	6F	R51	*
DS1	5E	R7	5C	R52	6D

* NOT USED
** WIRING TERMINATION - FOR REFERENCE ONLY

PART LOCATION INDEX FOR FIGURE 7-62 (CONTINUED)

REF. DES.	ZONE	REF. DES.	ZONE	REF. DES.	ZONE
A2A5A2R53	*	A2A5A2R58	*	A2A5A2S1	5A,5B
R54	*	R59	*	T1	2F
R55	*	R60	4B	T2	2C
R56	6E	R61	3B	T3	3B
R57	*	R62	3C		

* NOT USED
** WIRING TERMINATION - FOR REFERENCE ONLY

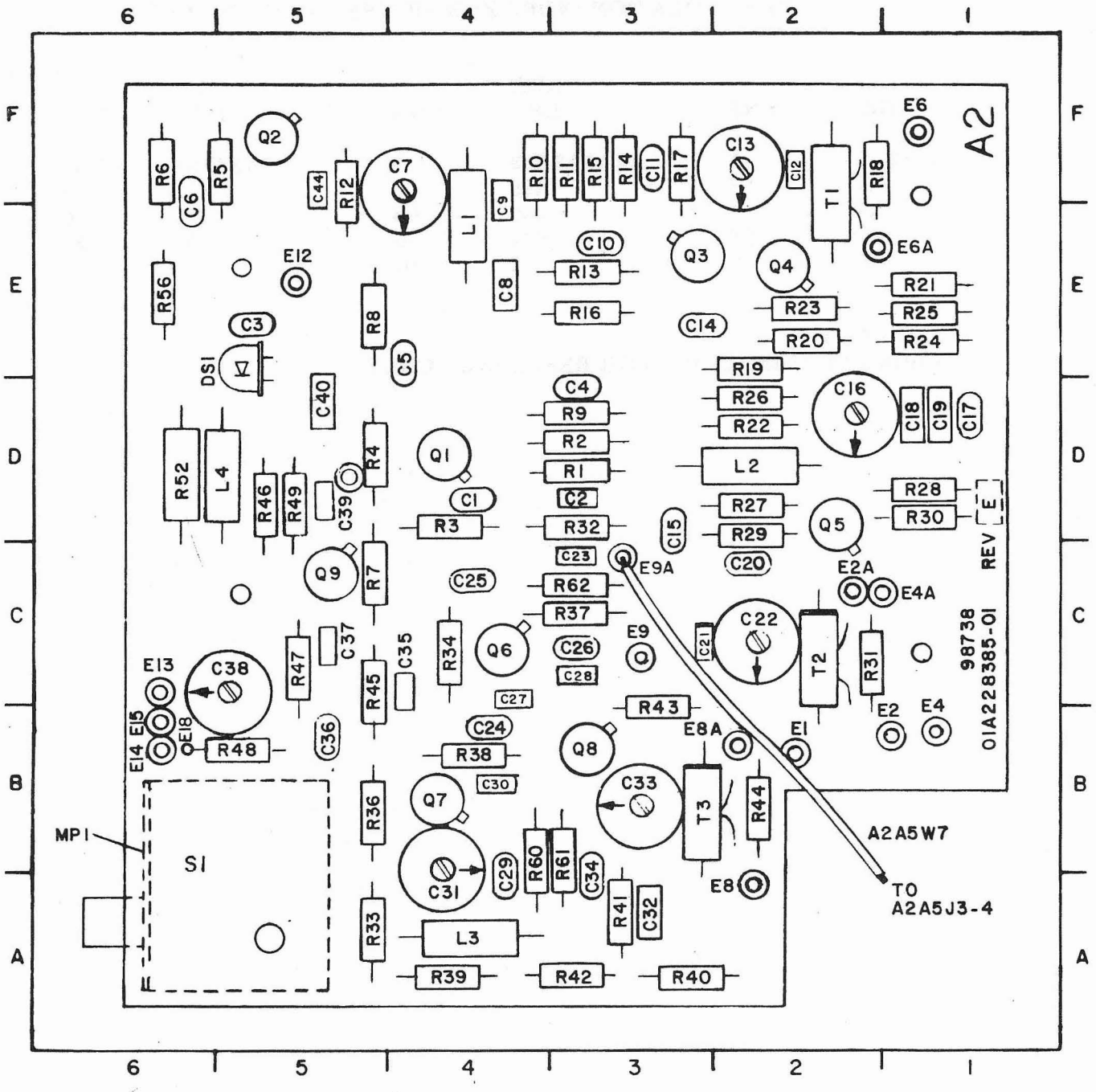

Figure 7-62. Divider/Amplifier Subassembly A2A5A2
Component Locations

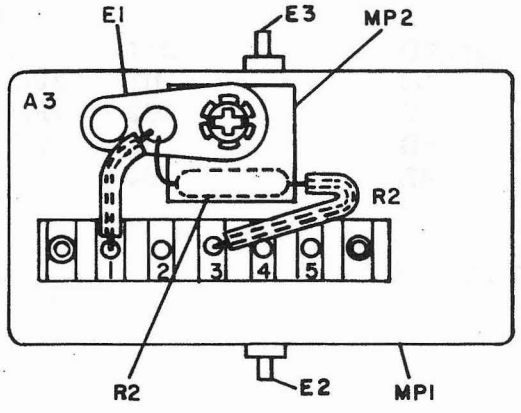

VIEW A-A

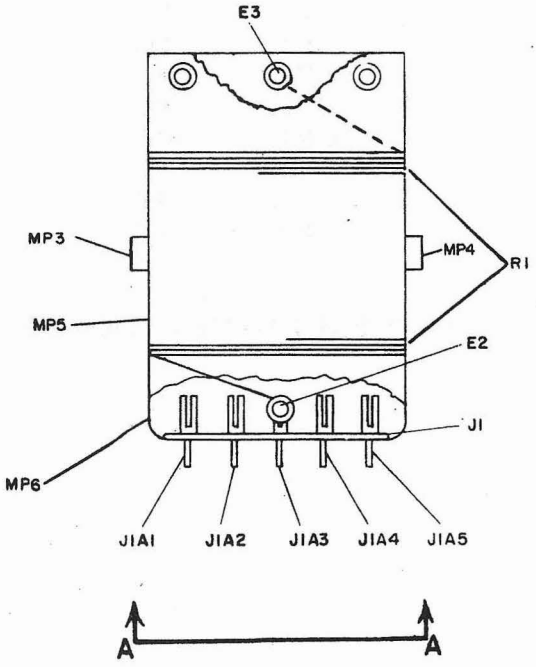

Figure 7-63. Oven Body Subassembly A2A5A3, Component Locations

PART LOCATION INDEX FOR FIGURE 7-64

REF. DES.	ZONE	REF. DES.	ZONE	REF. DES.	ZONE
A2A5A4C1	4E,4D	A2A5A4CR8	3D	A2A5A4R4	3E
C2	2D	**E1	1E	R5	5F,5E
C3	2G	**E2	1B	R6	4E
C4	1B	E3	4B	R7	3E
C5	2D	**E4	3B	R8	2E
C6	4G	**E5	1C	R9	2E
C7	3G	**E6	1B	R10	2E
C8	2C	Q1	5E,4E	R11	3C
CR1	5G	Q2	2E	R12	3B,3C
CR2	4G	Q3	2B	R13	1D
CR3	4G	Q4	2C,2D	R14	3D
CR4	4F	Q5	4C	U1	3F,3G
CR5	4E	R1	4D	U2	1F,1G
CR6	2E	R2	3D	U3	1C,1D
CR7	2C	R3	4F,4E	U4	4F

** WIRING TERMINATION - FOR REFERENCE ONLY

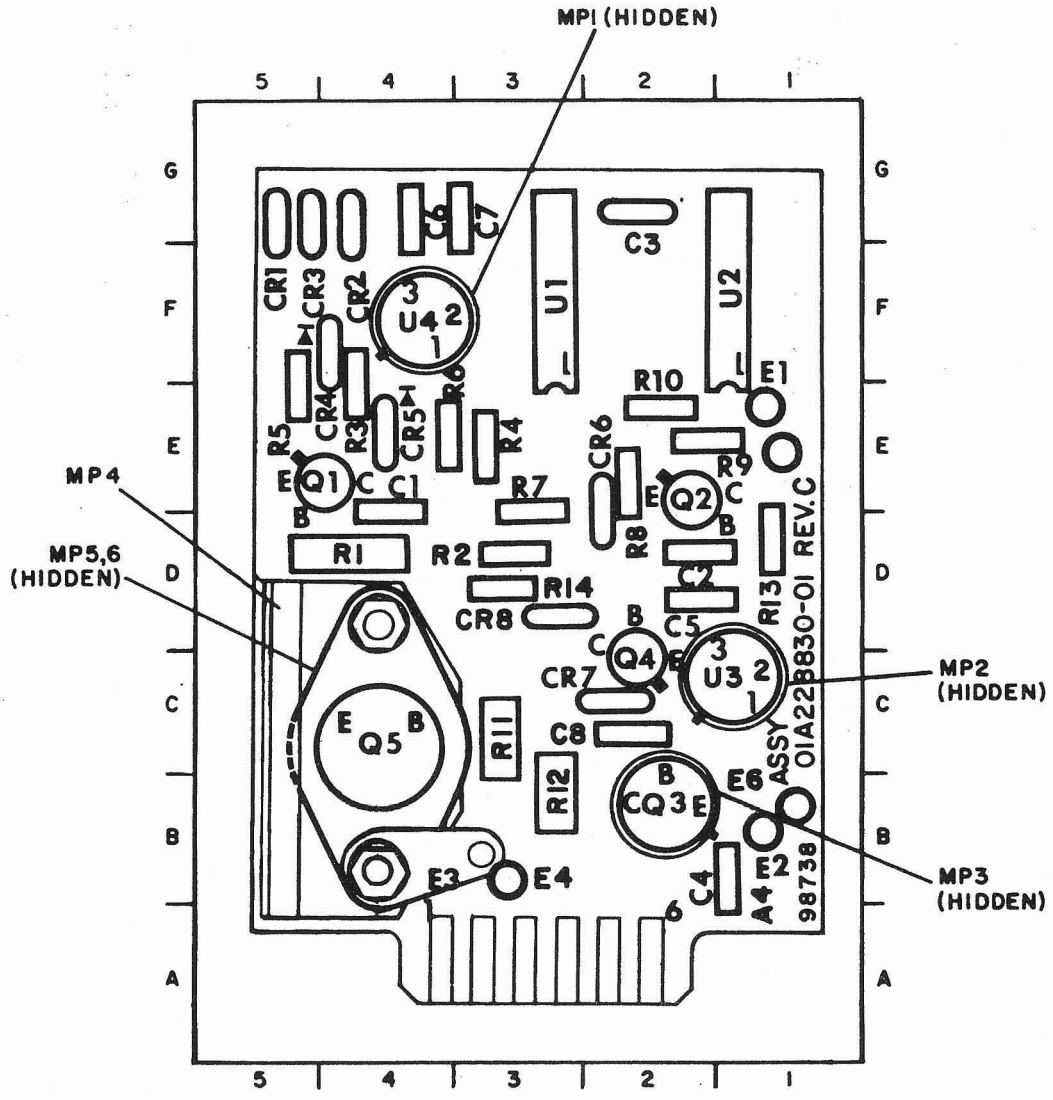

Figure 7-64. 5 MHz Reference Control Subassembly A2A5A4, Component Locations

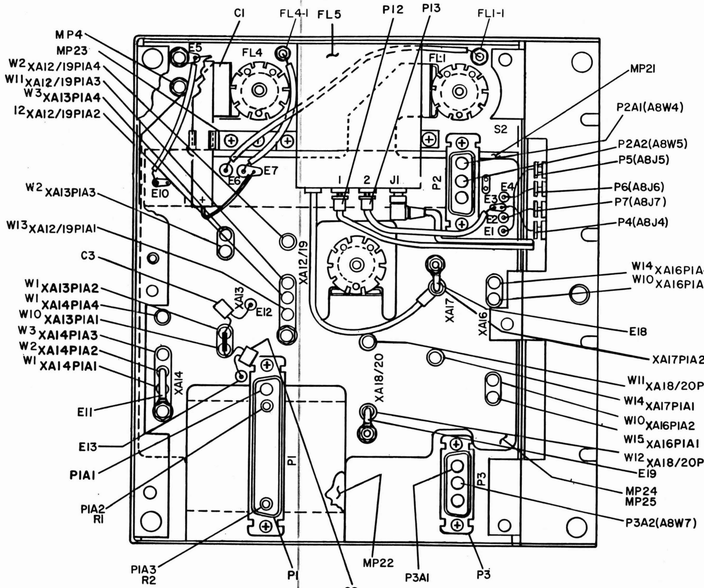

BOTTOM VIEW
(MP1 REMOVED)

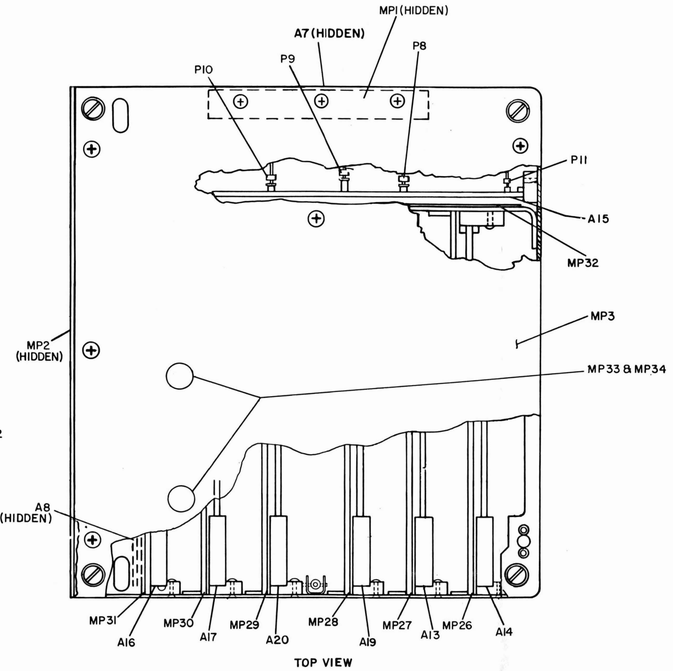

TOP VIEW

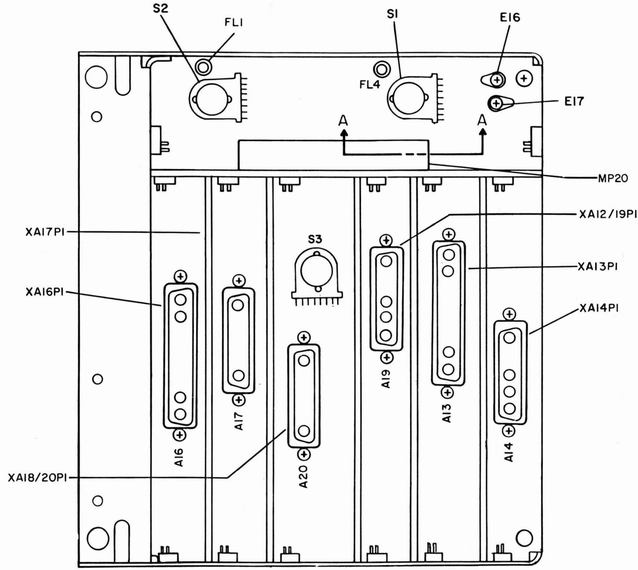

TOP VIEW, A13 THRU A17, A19 AND A20 REMOVED

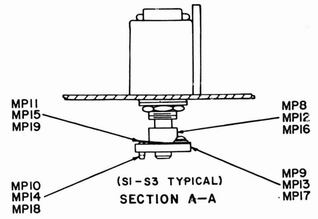

MP8-MP11 ARE USED ON S1.
MP12-MP15 ARE USED ON S2.
MP16-MP19 ARE USED ON S3.

Figure 7-65. Translator/Synthesizer Assembly A2A6, Component Locations

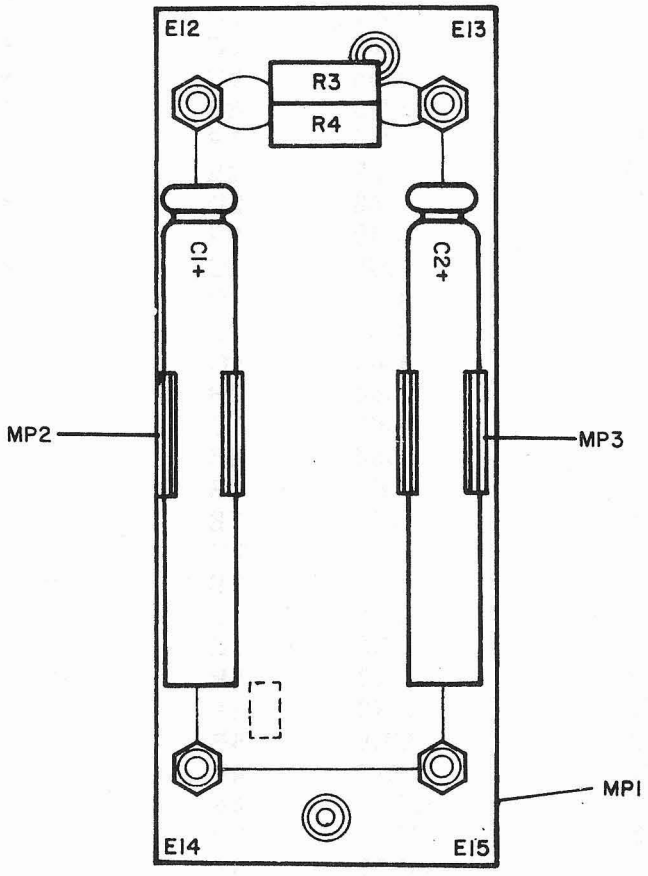

Figure 7-66. Filter Assembly A2A6A7, Component Locations

PART LOCATION INDEX FOR FIGURE 7-67

REF. DES.	ZONE	REF. DES.	ZONE	REF. DES.	ZONE
A2A6A8C1	7B	A2A6A8C46	4C	**A2A6A8E6	7C
C2	7B	C47	3B	**E7	5B
C3	8B	C48	1C	**E8	5B
C4	8D	C49	1C	**E9	2B
C5	7B	C50	1C	**E10	1B
C6	7D	C51	1C	**E11 thru **E14	1D
C7	7E	C52	1C		
C8	7D	C53	2C		
C9	8C	C54	2C	**E15	6B
C10	7B	C55	2B	**E16	4B
C11	7C	C56	1E	**E17	3B
C12	7B	C57	2E	**E18	4B
C13	7C	C58	2D	**E19	3B
C14	8E	C59	2E	**E20	4B
C15	7D	C60	2C	**E21	3B
C16	7D	C61	2D	FL1	4B,4C,4D
C17	7C	C62	2C	FL2	3C,3D,3E
C18	7E	C63	1C	FL3	6C,6D,6E
C19	8D	C64	2B	J1	*
C20	7D	C65	2D	J2	*
C21	8D	C66	8E	J3	*
C22	5B	CR1	7B	J4	5A
C23	7B	CR2	7E	J5	6A
C24	5B	CR3	7C	J6	6A
C25	5C	CR4	7E	J7	6A
C26	5B	CR5	7C	L1	6B
C27	5D	CR6	5E	L2	7B
C28	5B	CR7	5B	L3	6B
C29	5D	CR8	5E	L4	6B
C30	5D	CR9	5B	L5	6B
C31	6C	CR10	4E	L6	5E
C32	6D	CR11	4E	L7	5B
C33	6E	CR12	3B	L8	4D
C34	5D	CR13	3B	L9	4E
C35	5B	CR14	2E	L10	4D
C36	5B	CR15	2C	L11	3C
C37	5D	CR16	1B	L12	5A
C38	5E	CR17	2C	L13	3B
C39	5E	CR18	1B	L14	2E
C40	4E	CR19	1D	L15	8E
C41	4E	CR20	2D	P1	6A
C42	4E	**E1		Q1	8B
C43	3D	thru	8D	R1	8B
C44	3B	**E4		R2	6B
C45	3B	**E5	8C	R3	8C

* NOT USED

** WIRING TERMINATION - FOR REFERENCE ONLY

PART LOCATION INDEX FOR FIGURE 7-67 (CONTINUED)

REF. DES.	ZONE	REF. DES.	ZONE	REF. DES.	ZONE
A2A6A8R4	7C	A2A6A8R35	4E	A2A6A8R67	2C
R5	8B	R36	4B	R68	2B
R6	7B	R37	4D	R69	2B
R7	8B	R38	4B	R70	2C
R8	7B	R39	1C	RT1	8C
R9	7B	R40	2C	RT2	5C
R10	7E	R41	1B	RT3	1B
R11	8C	R42	1C	T1	8B
R12	7C	R43	1B	T2	7D
R13	7B	R44	2E	T3	7C
R14	7E	R45	1C	T4	5E
R15	7D	R46	1B	T5	5C
R16	8C	R47	2D	T6	2C
R17	7D	R48	2B	T7	2B
R18	8D	R49	2D	TP1	
R19	8C	R50	2B	thru	*
R20	8D	R51	1D	TP4	
R21	5C	R52	2D	TP5	1E
R22	5C	R53	2D	TP6	1E
R23	5D	R54	2B	TP7	8E
R24	5B	R55	2B	TP8	8E
R25	5D	R56	8C	U1	7D
R26	5B	R57	5B	U2	5D
R27	6C	R58	2B	U3	2C
R28	5E	R59		W1	3A
R29	5C	thru	7D	W2	6A
R30	6E	R62		W3	5A
R31	5C	R63	5C	W4	6A
R32	6C	R64	5C	W5	5A
R33	5C	R65	5D	W6	3A
R34	3D	R66	5D	W7	4A

* NOT USED

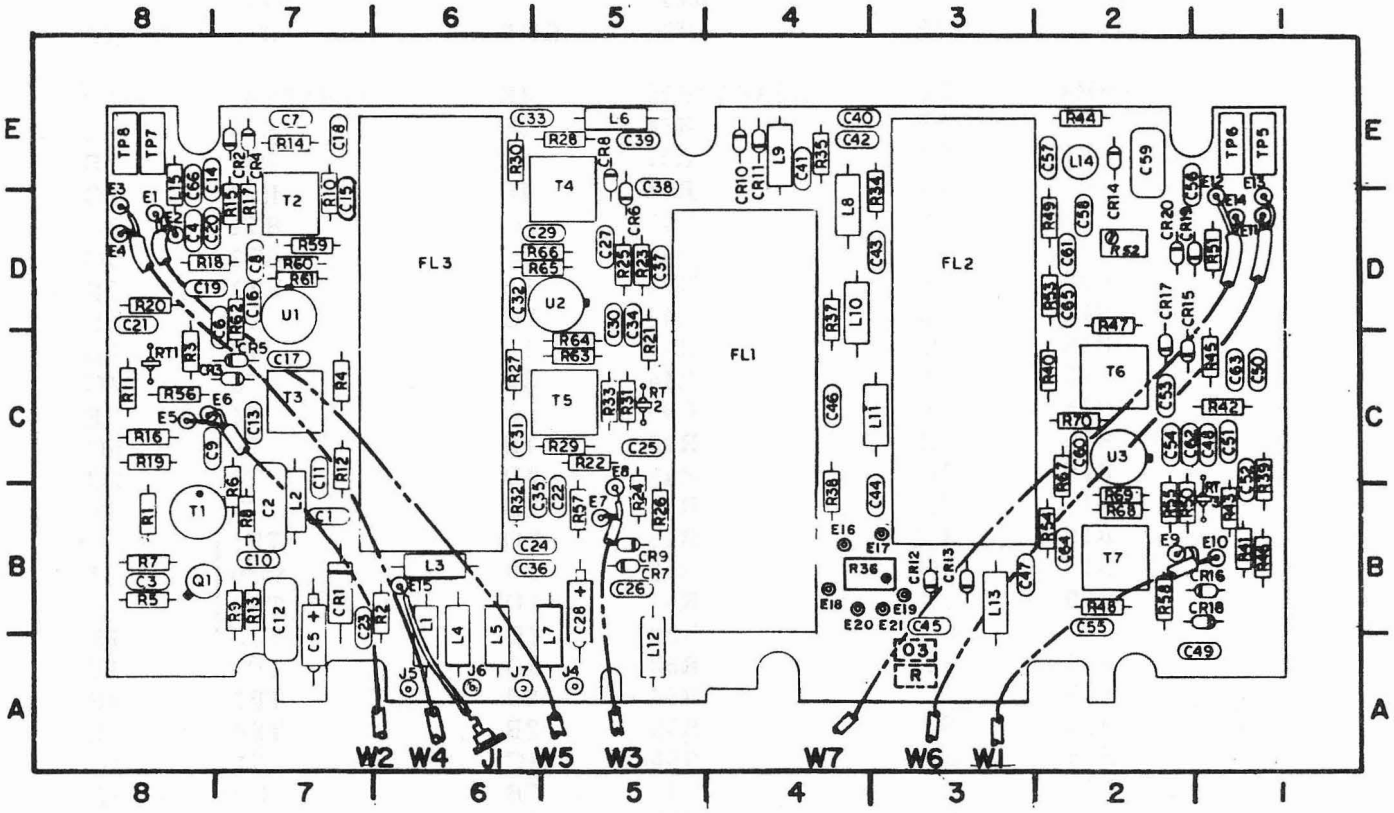

A2A6A8 CONNECTORS



Figure 7-67. RF Translator Subassembly A2A6A8, Component Locations

PART LOCATION INDEX FOR FIGURE 7-68

REF. DES.	ZONE	REF. DES.	ZONE	REF. DES.	ZONE
A2A6A13C1	1B	**A2A6A13E9	3C	A2A6A13R19	4D
C2	4B	**E10	3C	R20	6B
C3	5B	**E11	1D	R21	6B
C4	5D	**E12	1D	R22	
C5	6C	**L1	1A	thru	*
C6	5B	L2	*	R26	
C7	5C	L3	6D	R27	5B
C8	5C	L4	3C	TP1	4D
C9	6C	L5	3C	TP2	2D
C10	5C	L6	3C	TP3	2D
C11	5D	L7	2C	U1	4C
C12	4D	L8	2C	U2	5B
C13	4C	L9	5C	U3	5C
C14	3D	MP1	6D	U4	4C
C15	2D	MP2	1D	U5	3D
C16	1B	Q1	5D	U6	2D
C17	1C	R1	6A	U7	1C
C18	1C	R2	2C	U8	1B
C19	5A	R3	2C	U9	1C
C20	4C	R4	3C	W1	1D,3C
CR1		R5	3C	A2A6A13A1	2B
thru	*	R6	3C	MP1	3A
CR5		R7	*	MP2	4A
CR6	6A	R8	5B	MP3	1A
CR7	5C	R9	5C	P1	2,3A
CR8	6C	R10	5B	P1A1	3A
CR9	6C	R11	5C	P1A2	3A
**E1	2C	R12	*	P1A3	2A
**E2	2C	R13	5D	P1A4	2A
**E3	4C	R14	4D	W1	3B-4C
**E4	4C	R15	4D	W2	3B-3C
**E5	3C	R16	3C	W3	2B-3C
**E6	4C	R17	2C	W4	2B-2C
**E7	4C	R18	2C		
**E8	3C				

* NOT USED
** WIRING TERMINATION - FOR REFERENCE ONLY

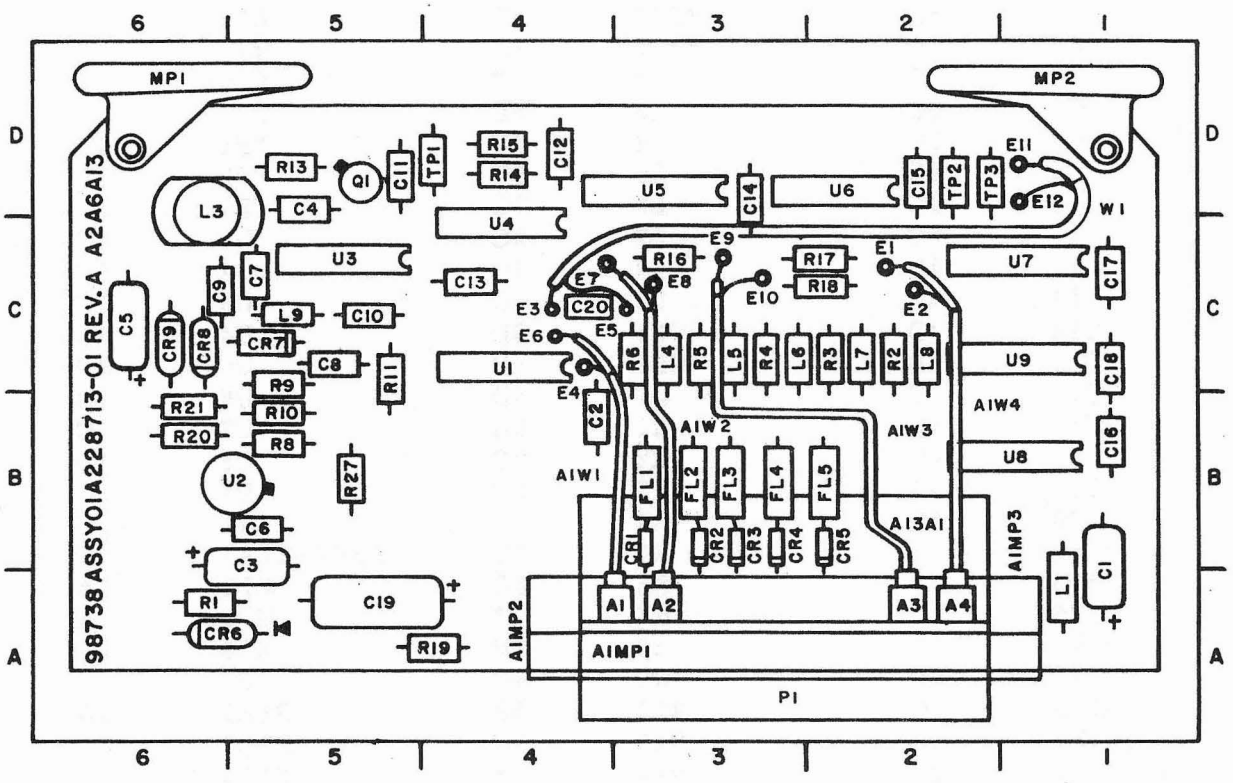

Figure 7-68. Circuit Card Assembly 10 MHz/1 MHz A2A6A13, Component Locations

PART LOCATION INDEX FOR FIGURE 7-69

REF. DES.	ZONE	REF. DES.	ZONE	REF. DES.	ZONE
A2A6A14C1	5B	*A2A6A14E14	2B	A2A6A14R1	5B
C2	5B	E15	5B	R2	6B
C3	6C	E16	2C	R3	6B
C4	5C	L1	6B	R4	6B
C5	6C	L2	6C	R5	5B
C6	5C	L3	6C	R6	5B
C7	5C	L4	6C	R7	5B
C8	5D	L5	5C	R8	5C
C9	6B	L6	6C	R9	6C
C10	4C	L7	4C	R10	5D
C11	4C	L8	3C	R11	4C
C12	4B	L9	3C	R12	4B
C13	3C	L10	3C	R13	
C14	3B	L11	3C	thru	4C
C15	3C	L12	3C	R18	
C16	3C	L13	1B	R19	3C
C17	3C	L14	1C	R20	3C
C18	4B	L15	1C	R21	2A
C19	2B	L16	1C	R22	2A
C20	1B	L17	2C	R23	1B
C21	1C	L18	1C	R24	1B
C22	2C	L19	4B	R25	2B
C23	1C	MP1	6D	R26	2B
C24	2C	MP2	1D	R27	2B
C25	2C	MP3	5B	R28	2C
C26	1D	MP4	4C	R29	1C
C27	1B	MP5	1B	R30	2C
C28	3B	P1	3A,4A	R31	3D
C29	3D	P1A1	4B	TP1	5D
*E1	5B	P1A2	4B	TP2	4D
*E2	4C	P1A3	3B	TP3	3D
*E3	3D	P1A4	3B	TP4	4D
*E4	2B	Q1	5B	TP5	3D
*E5	5B	Q2	5B	TP6	2D
*E6	4D	Q3	5D	TP7	2D
*E7	2C	Q4	4C	W1	4B-5B
*E8	2B	Q5	4C	W2	4B-4C
*E9	4C	Q6	2C	W3	2B-3B
*E10	3D	Q7	1B	W4	3B-3D
*E11	4D	Q8	2B	W5	2B-2C
*E12	2B	Q9	2D	W6	5B-5D
*E13	5B				

* NOT USED

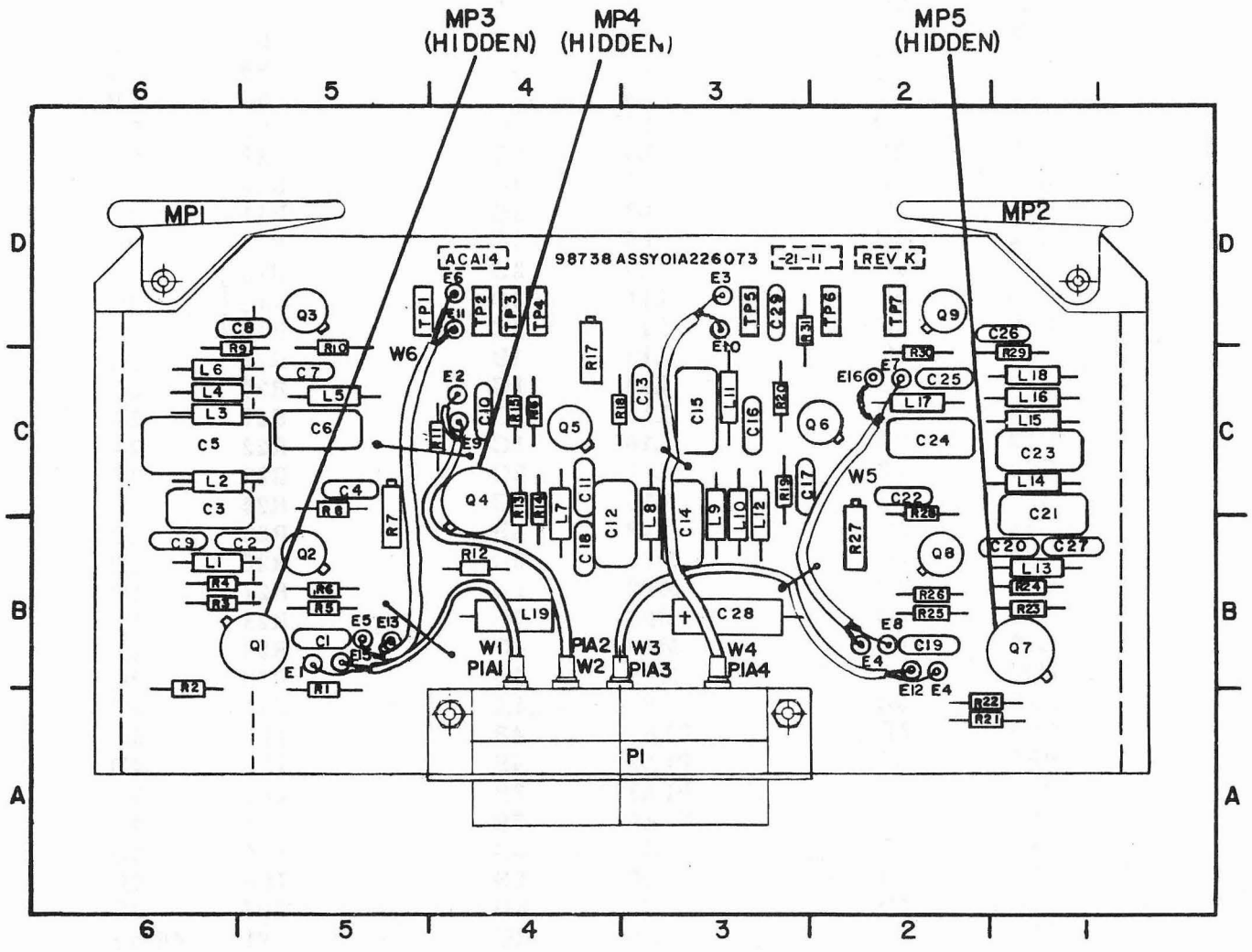

Figure 7-69. 10 MHz/1 MHz Filter Subassembly
A2A6A14, Component Locations

PART LOCATION INDEX FOR FIGURE 7-70

REF. DES.	ZONE	REF. DES.	ZONE	REF. DES.	ZONE
A2A6A15C1	5A	A2A6A15E2	2C	A2A6A15R5	6B
C2	6C	E3	*	R6	5A
C3	5B	E4	5D	R7	5B
C4	4A	E5	4D	R8	5B
C5	1B	E6	3D	R9	1C
C6	1B	L1	3A,3B	R10	1C
C7	5A	L2	3C,4C	R11	1D
C8	*	MP1	3C,3D	R12	2B
C9	5C	MP2	2C,2D	R13	1B
C10	4C	MP3	4B	R14	2B
C11	2B	MP4	1B	R15	2D
C12	5B	Q1	5B	R16	2B
C13	4C	Q2	1B	TP1	5D
C14	2B	Q3	2C,2D	TP2	2D
C15	4D	R1	6B	TP3	*
C16	6B	R2	6A	TP4	6D
CR1	5B	R3	6B	U1	5A
CR2	3C,3D	R4	6A	U2	5A
E1	6D				

* NOT USED

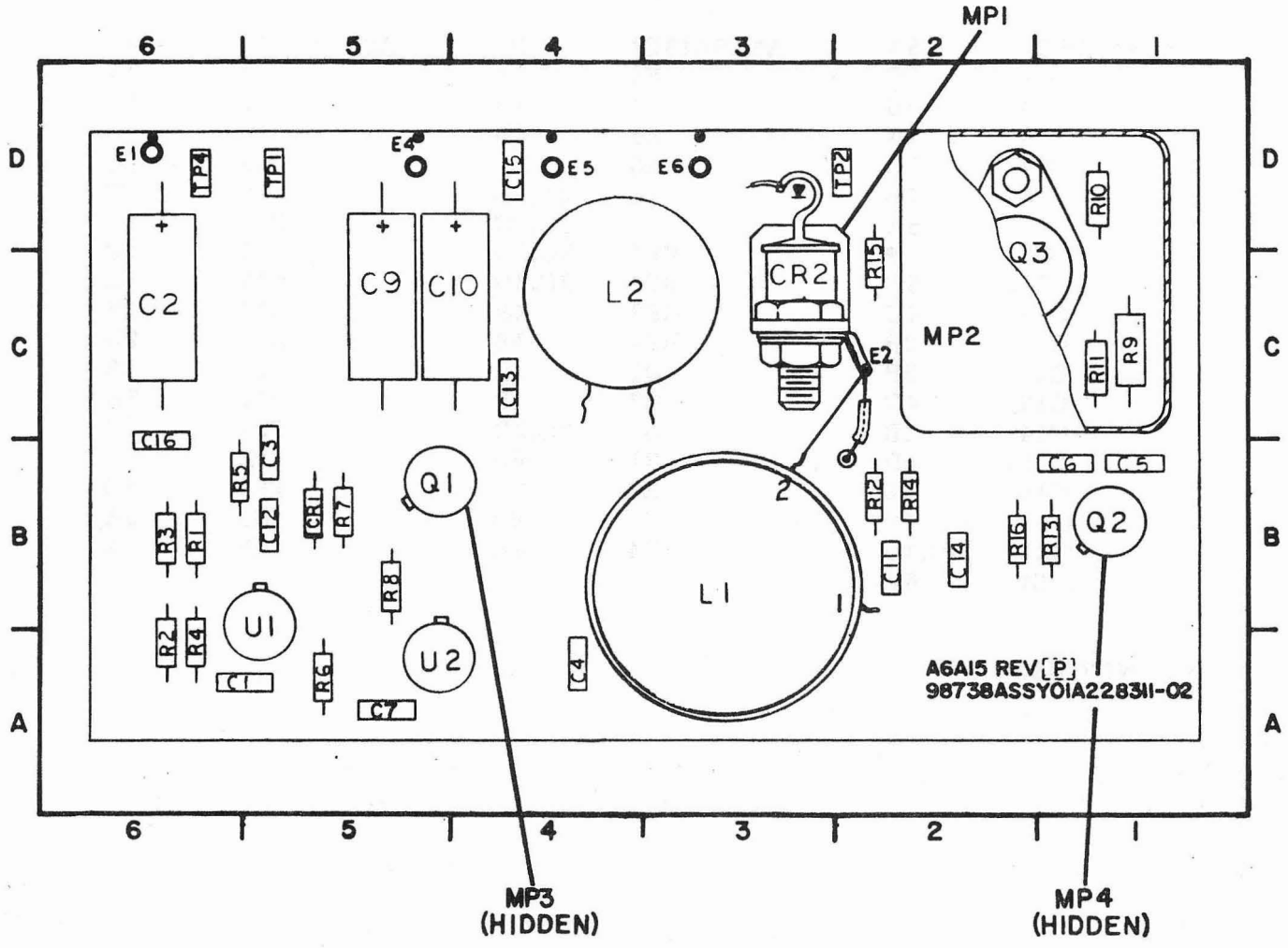

Figure 7-70. Power Supply Subassembly A2A6A15, Component Locations

PART LOCATION INDEX FOR FIGURE 7-71

REF. DES.	ZONE	REF. DES.	ZONE	REF. DES.	ZONE
A2A6A16C1	*	A2A6A16E2	3E	A2A6A16R15	2B
C2	2D	E3	2D	R16	*
C3	3C	E4	3D	R17 thru R20	5E
C4	4C	E5	3C		
C5	3E	E6	3C		
C6	3E	E7	3C	R21	4E
C7	3D	E8	2C	R22	4E
C8	3E	**E9	4C	R23	4E
C9	3D	**E10	4C	R24	3D
C10	2E	L1	*	R25 thru R29	6C
C11	2E	L2	*		
C12	1E	L3	3B		
C13	2C	L4	*	R30	5C
C14	3D	L5	6B	R31	*
C15	2A	L6	2E	R32	6B
C16	2B	L7	2E	R33 thru R36	5B
C17	2C	MP1	6E		
C18	4D	MP2	1E		
C19	*	P1	3A	R37	4B
C20	4D	P1A1	4A	R38	4C
C21	4D	P2A2	4A	R39	3B
C22	6D	P2A3	3B	TP1	5E
C23	5D	P2A4	2B	TP2	3E
C24	5D	Q1	3E	TP3	3E
C25	5C	Q2	3D	TP4	1E
C26	5D	Q3	3B	U1	2D
C27	*	Q4	2B	U2	1D
C28	5B	Q5	5A	U3	1D
C29	5C	Q6	3B	U4	3C
C30	5B	R1	4E	U5	1C
C31	5B	R2	3E	U6	1B
C32	4B	R3	3D	U7	1A
C33	4B	R4	3D	U8	6D
C34	5A	R5	3D	U9	5D
C35	5A	R6	2D	U10	6C
C36	5A	R7	2E	U11	4B
C37	4C	R8	3D	U12	6A
C38	2C	R9	3D	U13	5C
CR1	4D	R10	2E	U14	5D
CR2	5C	R11	2D	W1	4B-4D
CR3	5C	R12	2B	W2	4B-3D
CR4	4C	R13	2B	W3	3B-3C
CR5	5B	R14	2B	W4	2B-2C
E1	3E				

* NOT USED
** WIRING TERMINATION - FOR REFERENCE ONLY

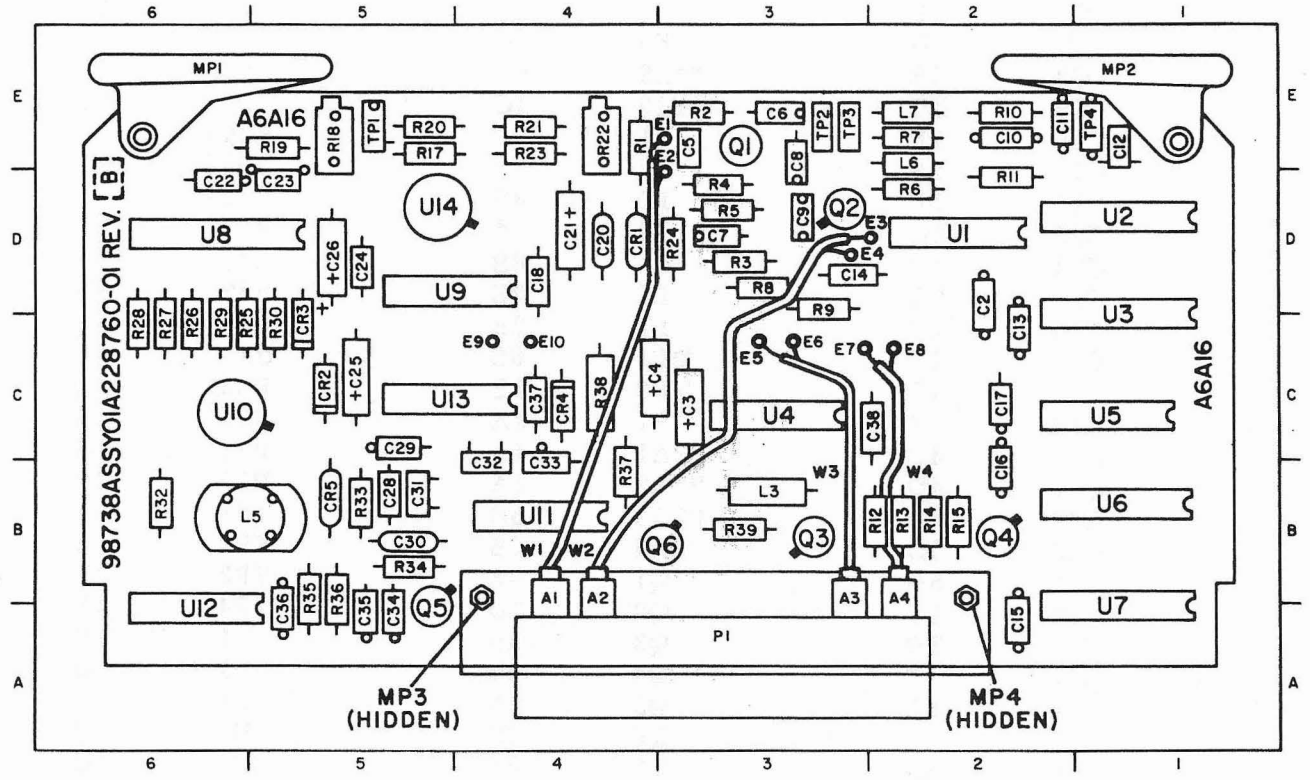

Figure 7-71. Frequency Generator Subassembly A2A6A16, Component Locations

PART LOCATION INDEX FOR FIGURE 7-72

REF. DES.	ZONE	REF. DES.	ZONE	REF. DES.	ZONE
A2A6A17C1	1D	A2A6A17L1	*	A2A6A17R14	4C
C2	4D	L2	*	R15	3C
C3	6B	L3	6B	R16	1C
C4	1B	L4	5B	R17	2A
C5	6A	L5	5B	R18	1B
C6	5B	L6	4B	R19	1B
C7		L7	4B	R20	*
thru	*	L8	4C	R21	*
C12		L9	*	R22	2A
C13	4B	L10	5A	R23	2A
C14	6B	MP1	6D	R24	1A
C15	5B	MP2	1D	R25	1A
C16	6A	P1	3A	R26	1C
C17		P1A1	4A	R27	1C
thru	4B	P1A2	2A	R28	1A
C20		Q1	6B	R29	1A
C21	4C	Q2	4C	R30	2A
C22	*	Q3	1C	R31	4C
C23	5A	Q4	1A	R32	5D
C24	*	Q5	1B	R33	5D
C25	3C	Q6	3D	R34	5B
C26	3B	Q7	4D	R35	3D
C27	4B	Q8	3D	R36	4C
C28	3B	R1	5A	TP1	2D
C29	2C	R2	3D	TP2	2D
C30	4C	R3	3D	TP3	4D
C31	2C	R4	3D	U1	2D
C32	2B	R5	4D	U2A	3C
C33	5A	R6	4D	U2B	3B
C34	4A	R7	4D	U3	2B
C35	3D	R8	5D	U4	2C
C36	3D	R9	5B	U5	2C
CR1	5D	R10	6B	U6	3C
**E1	2D	R11	6B	A1 (Potted)	5C
**E2	2D	R12	4C	W1	4B-2C
**E3	4D	R13	4C	W2	2B-4C
**E4	4D				

* NOT USED
** WIRING TERMINATION - FOR REFERENCE ONLY

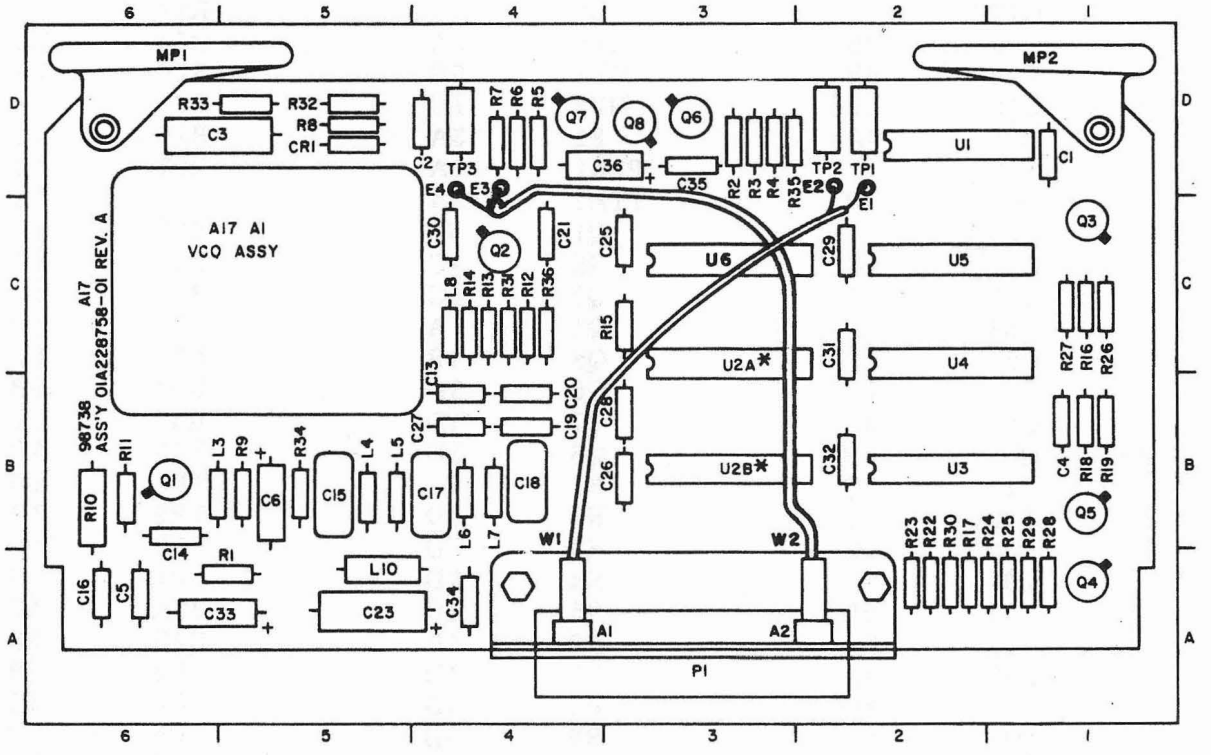

* CAUTION-ENSURE THAT CORRECT SOCKET FOR U2A (PREFERRED) OR U2B IS USED.

Figure 7-72. 100 kHz/10 kHz Synthesizer Subassembly A2A6A17, Component Locations

PART LOCATION INDEX FOR FIGURE 7-73

REF. DES.	ZONE	REF. DES.	ZONE	REF. DES.	ZONE
A2A6A19C1	1C	A2A6A19L4	*	A2A6A19R8	5B
C2	4B	L5	*	R9	4B
C3	3B	L6	5C	R10	4B
C4	5C	L7	4C	R11	5C
C5	6A	L8	4C	R12	5C
C6	5C	L9	4C	R13	6C
C7	5C	L10	4D	R14	4D
C8	6C	MP1	6D	R15	4D
C9	6C	MP2	1D	R16	4D
C10	5D	P1	2A	R17	*
C11	4C	P1A1	3B	R18	1B
C12	4C	P1A2	3B	R19	5B
**C13	2B	P1A3	2B	TP1	5D
C14	1B	P1A4	2B	TP2	5D
**E1	6B	Q1	5B	TP3	5D
**E2	5B	Q2	5B	U1	6B
**E3	6B	Q3	5B	U2	5C
**E4	5B	R1	5B	U3	6C
**E5	4D	R2	4B	W1	3B-5B
**E6	4D	R3	*	W2	3B-2B
**E7	1C	R4	5B	W3	2B-6B
**E8	1C	R5	5B	W4	2B-4D
L1	1B	R6	5B	A2A6A19A1	2C
**L2	1B	R7	4B	(Potted)	
L3	*				

* NOT USED
** WIRING TERMINATION - FOR REFERENCE ONLY

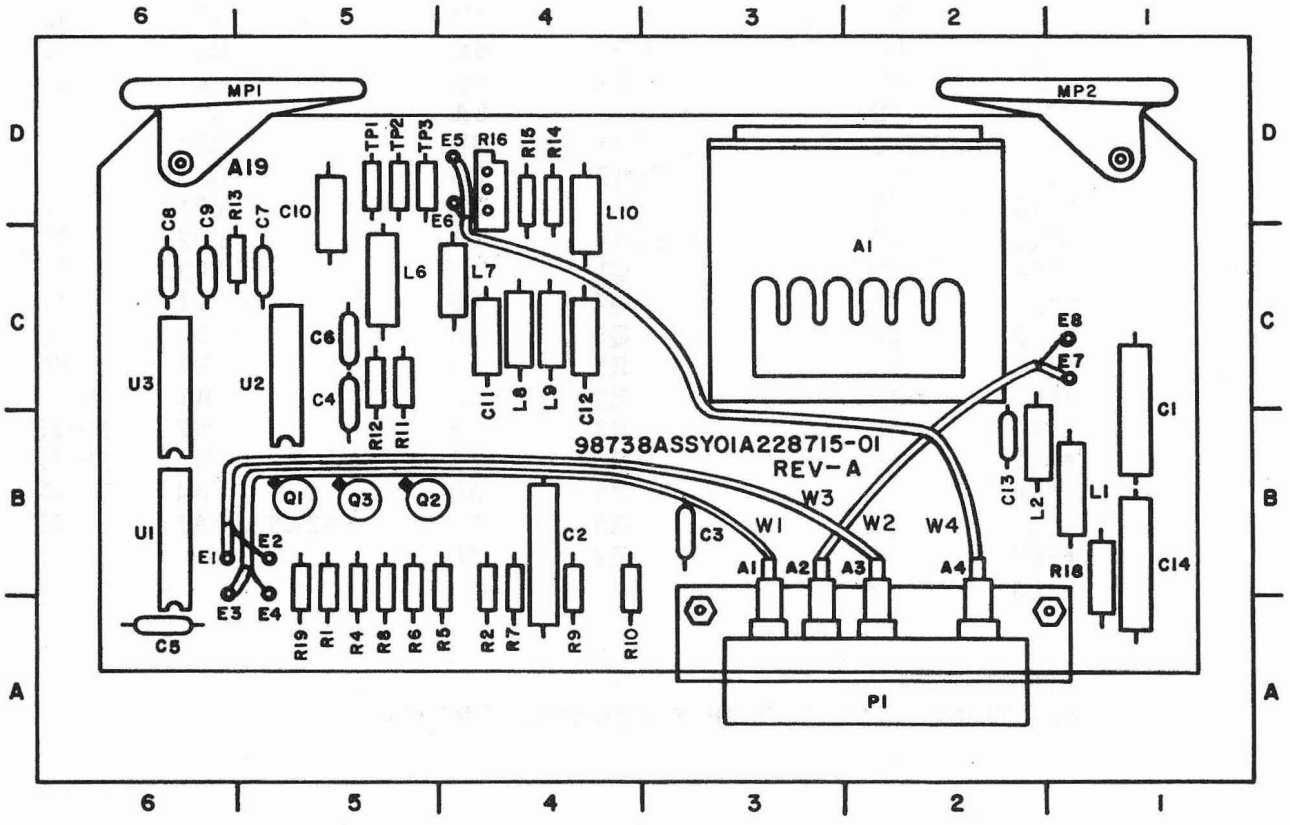

Figure 7-73. 1 kHz/100 Hz Synthesizer Subassembly (No. 2) A2A6A19, Component Locations

PART LOCATION INDEX FOR FIGURE 7-74

REF. DES.	ZONE	REF. DES.	ZONE	REF. DES.	ZONE
A2A6A20C1	5D	A2A6A20P1	4A	A2A6A20R18 thru R21	4B
C2	4D	P1A1	4B		
C3	3D	P1A2	3B		
C4	1D	Q1 thru Q4	6B	R22 thru R27	4C
C5	1D				
C6	1C				
C7	4C	Q5 thru Q8	5B	R28	4B
C8	3C			TP1	5D
C9	1C			TP2	4D
C10	1B	R1 thru R4	6A	U1A	5C
C11	4B			U1B	5C
C12	5D			U2	4C
C13	6D	R5 thru R8	5A	U3	3C
C14	4D			U4	1C
C15	5B			U5	1C
E1	5C	R9 thru R12	6C	U6	1C
E2	5C			U7	4B
E3	3D			U8	3B
E4	3D	R13 thru R16	5C	U9	1C
L1	5B			U10	1B
MP1	6D			W1	4B-4C
MP2	1D	R17	6C	W2	3B-3D

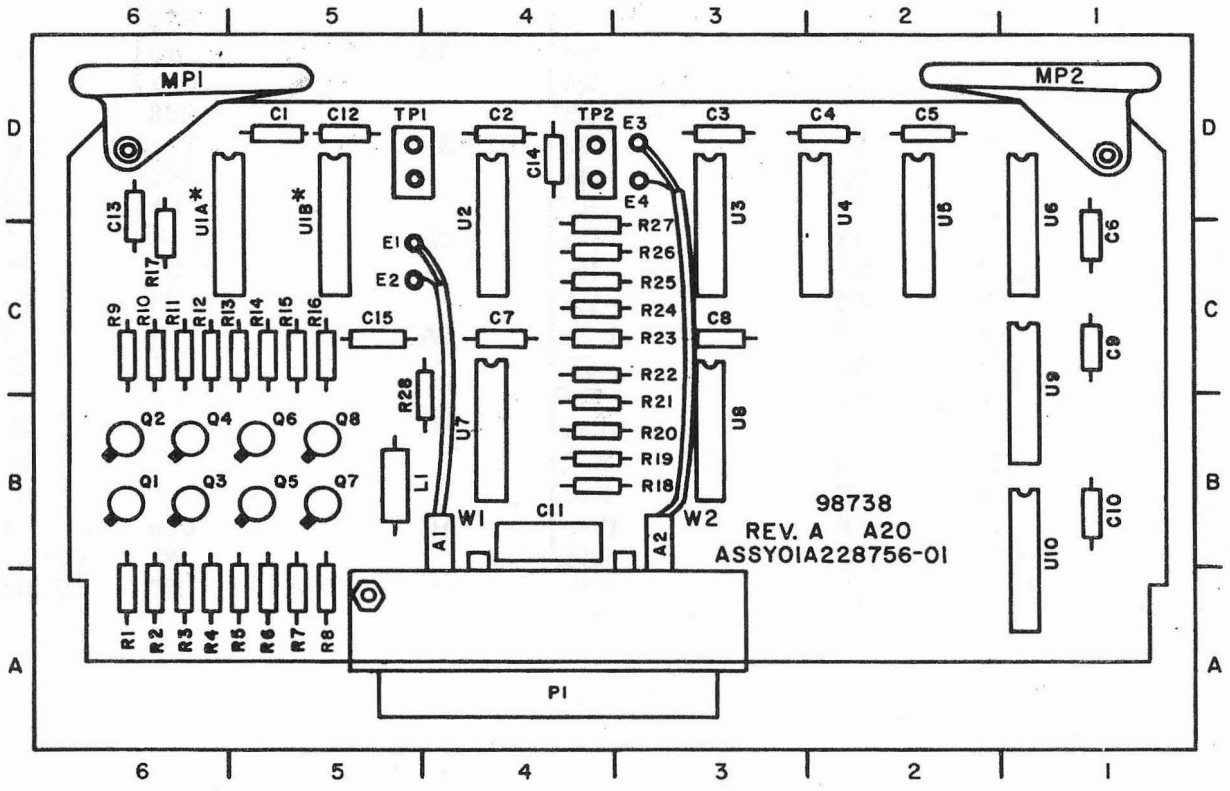

* CAUTION-ENSURE THAT CORRECT SOCKET FOR U1A (PREFERRED) OR U1B IS USED.

Figure 7-74. 1 kHz/100 Hz Synthesizer Subassembly (No. 1) A2A6A20, Component Locations

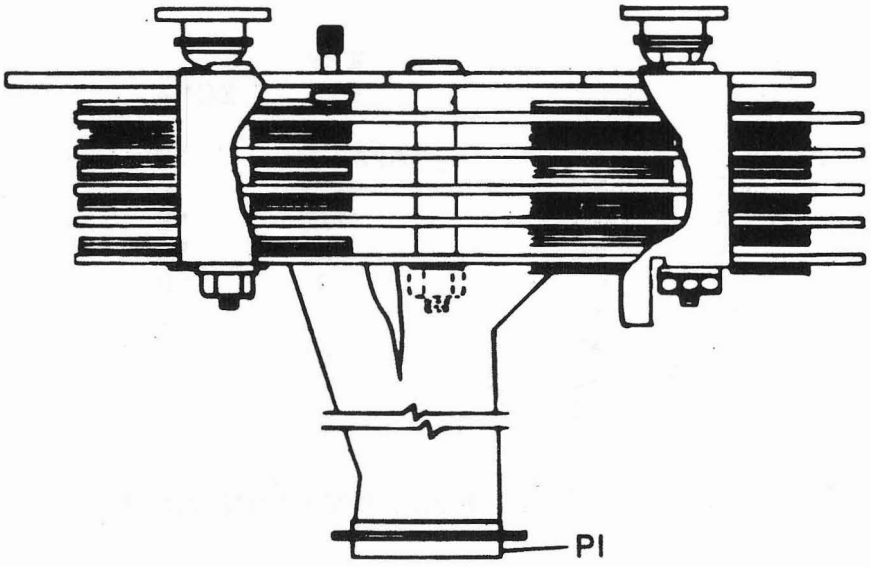

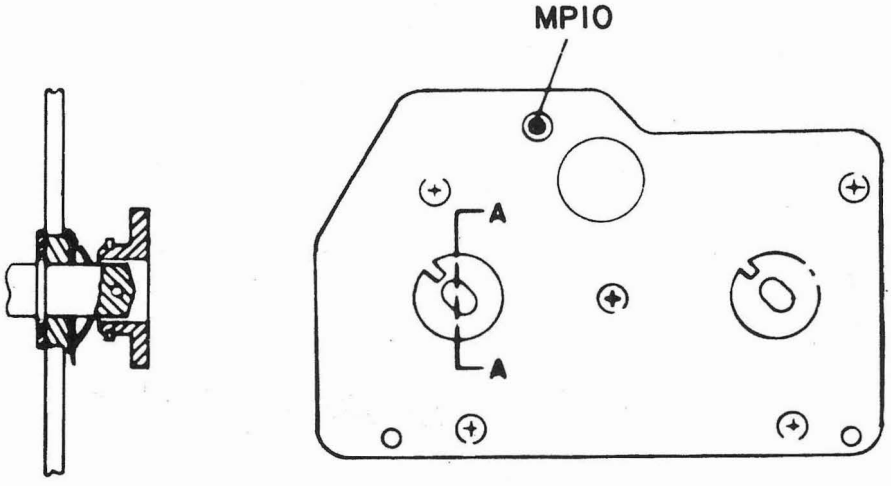

SECTION A-A

Figure 7-75. Code Generator Assembly A2A7, Component Locations

PART LOCATION INDEX FOR FIGURE 7-76

REF. DES.	ZONE	REF. DES.	ZONE	REF. DES.	ZONE
A2A9C1	4B	**A2A9E4	3B	A2A9R3	4E
C2	4C	**E5	2B	R4	3C
C3	4D	**E6	2B	R5	1D
C4	3E	K1	3C	R6	2C
CR1	4D	Q1	2D	R7	2E
CR2	2C	Q2	3D	R8	3C
**E1	4B	R1	4C	R9	2D
**E2	4B	R2	5C	R10	3A
**E3	3B				

** WIRING TERMINATION - FOR REFERENCE ONLY

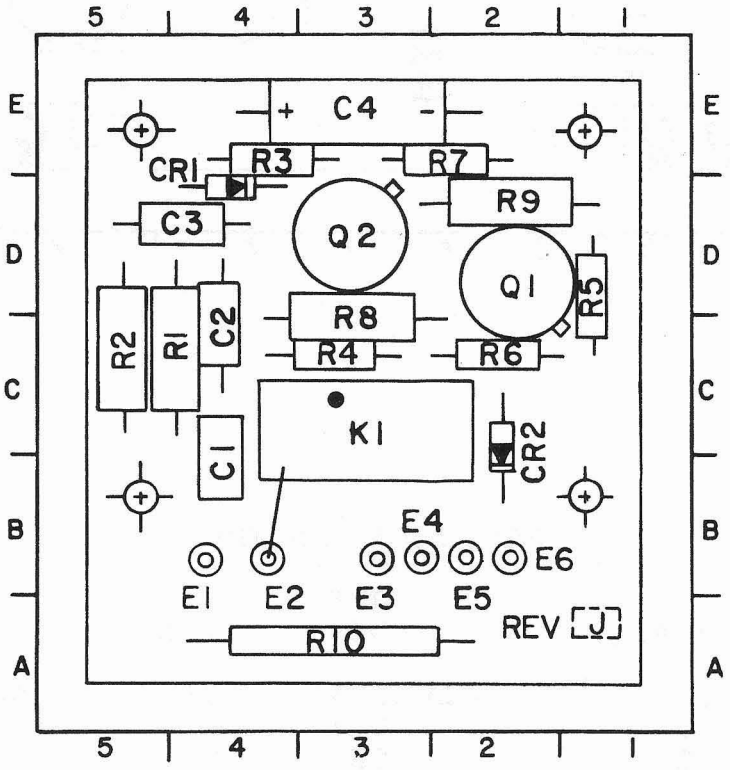

Figure 7-76. Antenna Overload Assembly A2A9, Component Locations

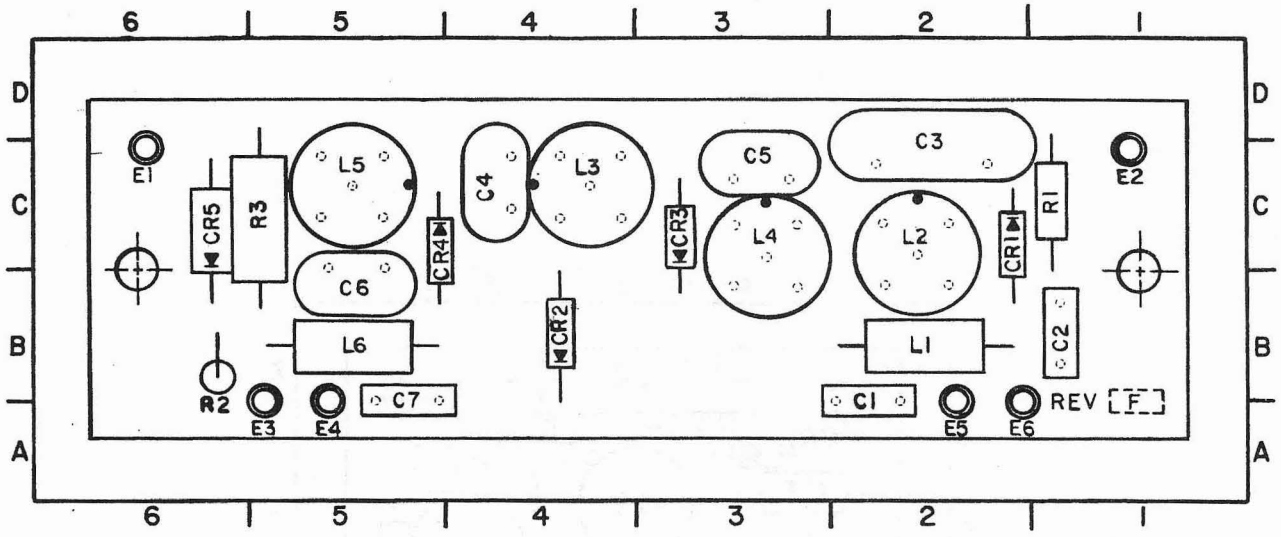

PART LOCATION INDEX

REF DES	ZONE	REF DES	ZONE	REF DES	ZONE
A2A10C1	2A	A2A10CR3	3C	A2A10L1	2B
C2	1B	CR4	5C	L2	2C
C3	2C	CR5	6C	L3	4C
C4	4C	* E1	6C	L4	3C
C5	3C	* E2	1C	L5	5C
C6	5B	* E3	5A	L6	5B
C7	5A	* E4	5A	R1	1C
CR1	2C	* E5	2A	R2	6B
CR2	4B	* E6	2A	R3	5C

* Wiring termination - for reference only.

Figure 7-77. 20 and 30 MHz Filter Assembly A2A10, Component Locations

PART LOCATION INDEX FOR FIGURE 7-78

REF. DES.	ZONE	REF. DES.	ZONE	REF. DES.	ZONE
A2A13C1	5A	A2A13CR6	2A	K1	3B
C2	3A	CR7	2A	K2	2B
C3	1C	CR8 thru CR11	6C	R1	2D
CR1	5C			R2	2D
CR2	5C			R3	5A
CR3	5C	CR12	6A	R4	5B
CR4	4C	CR13	5B	R5	1A
CR5	4B	J1	4D	R6	1D

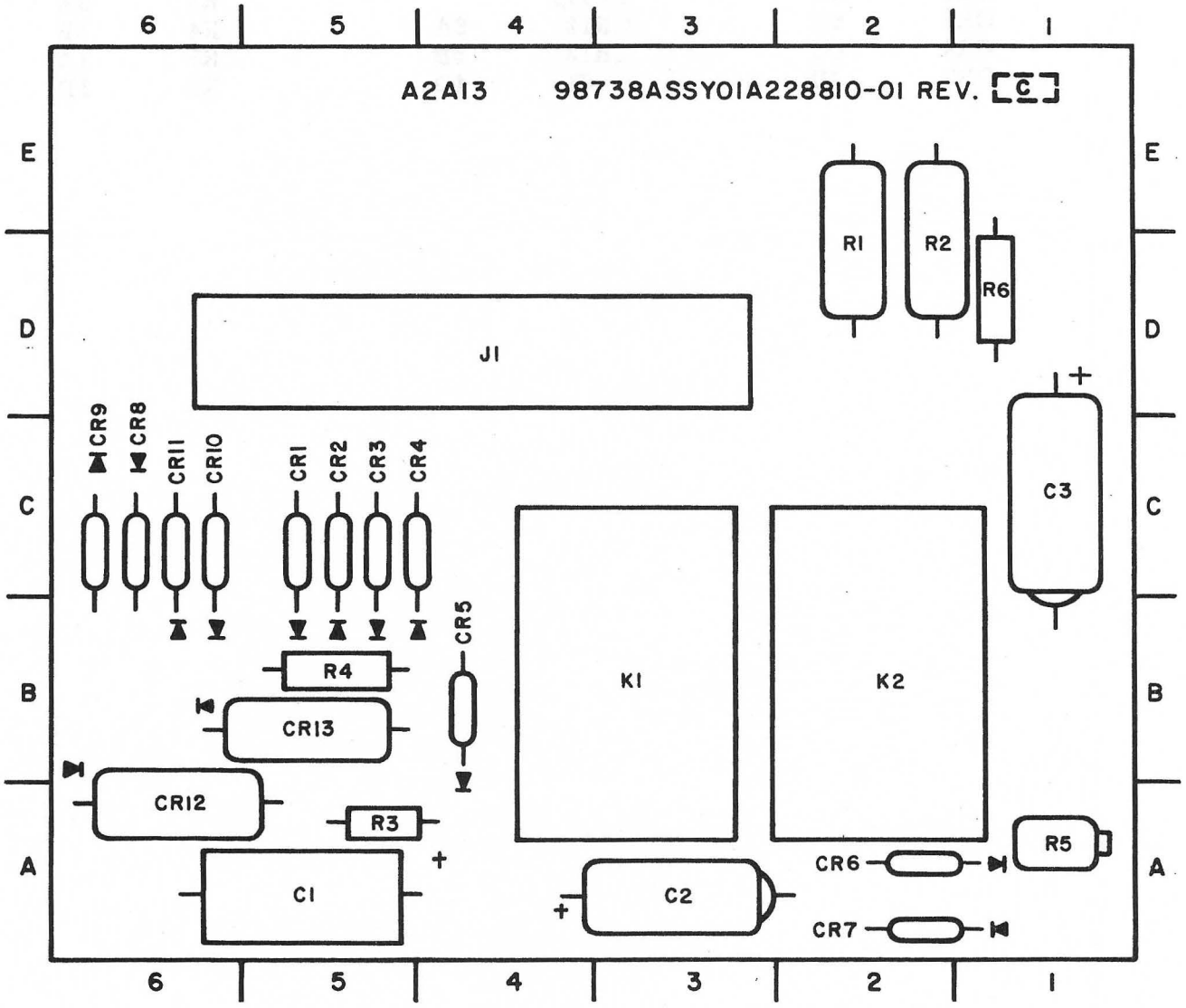

Figure 7-78. Control Assembly A2A13, Component Locations

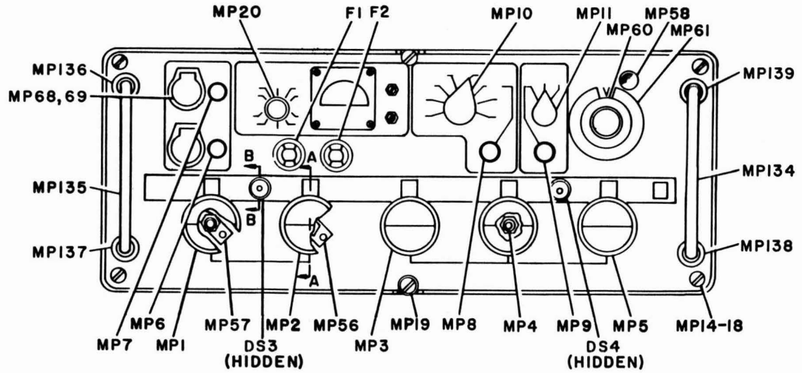

(FRONT)

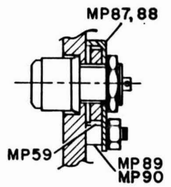

SECTION B-B

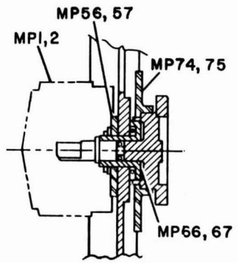

SECTION A-A

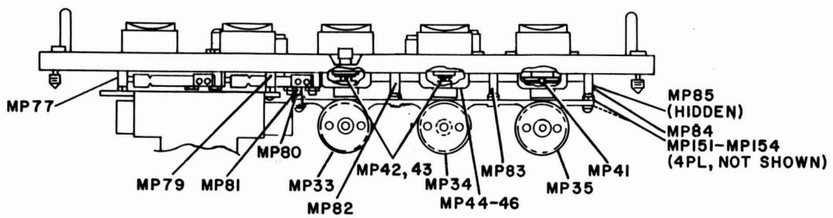

(BOTTOM)

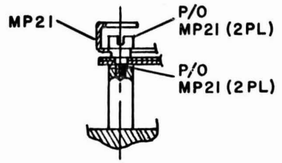

SECTION C-C (2PL)

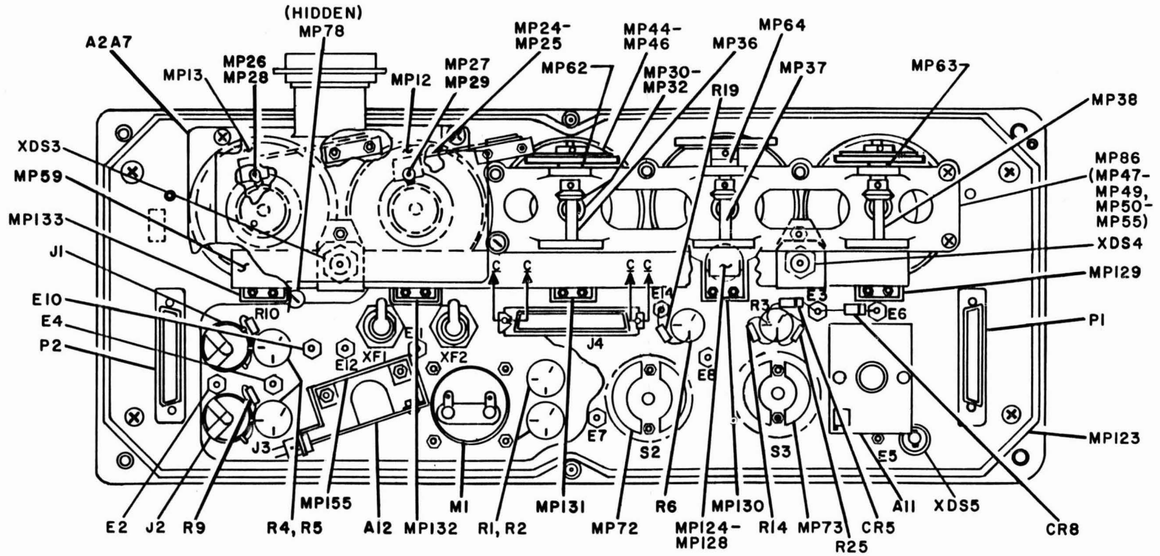

(REAR)

Figure 7-79. Front Panel Assembly A2A14, Component Locations

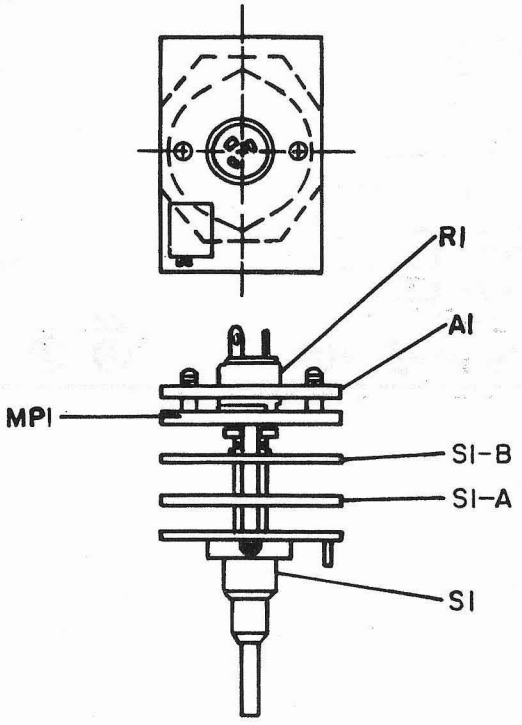

Figure 7-80. Vernier Switch Subassembly
A2A14A11, Component Locations

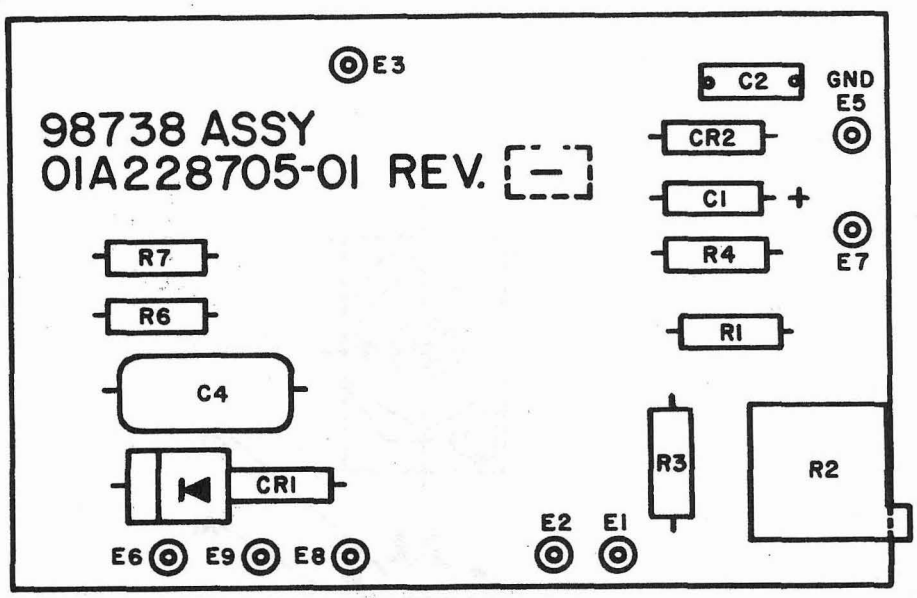

Figure 7-81. 4 Volt Power Supply Subassembly
A2A14A11A1, Component Locations

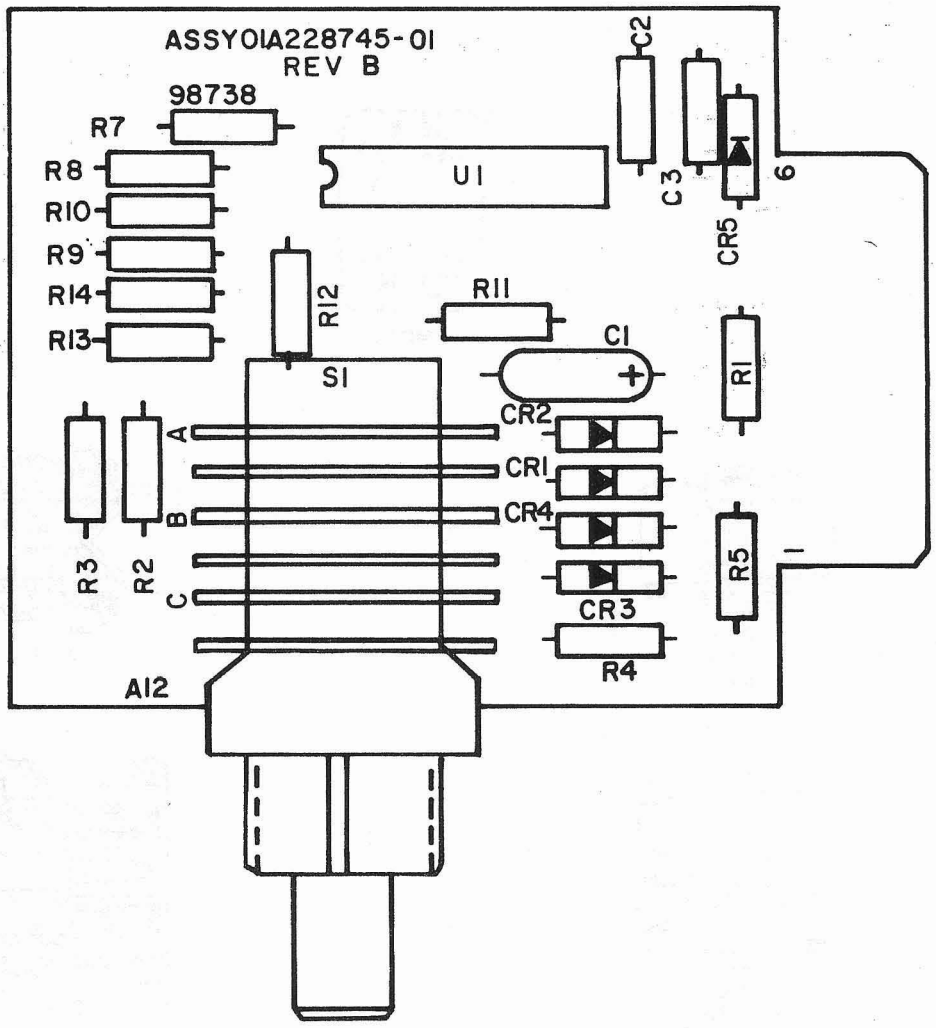

Figure 7-82. Meter Driver Subassembly
A2A12A12, Component Locations

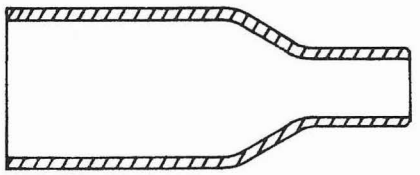

2MP1, MP2

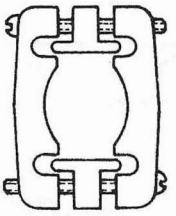

2MP3

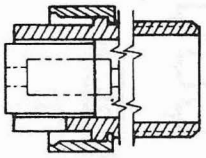

2P3
2P5
2P6

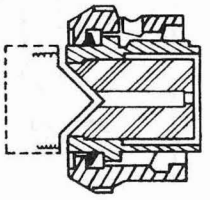

2P4

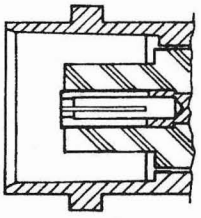

2P23
2P25

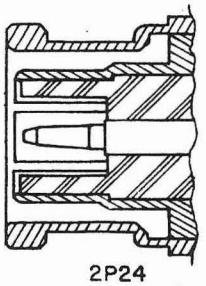

2P24

Figure 7-83. Mating Connector Kit

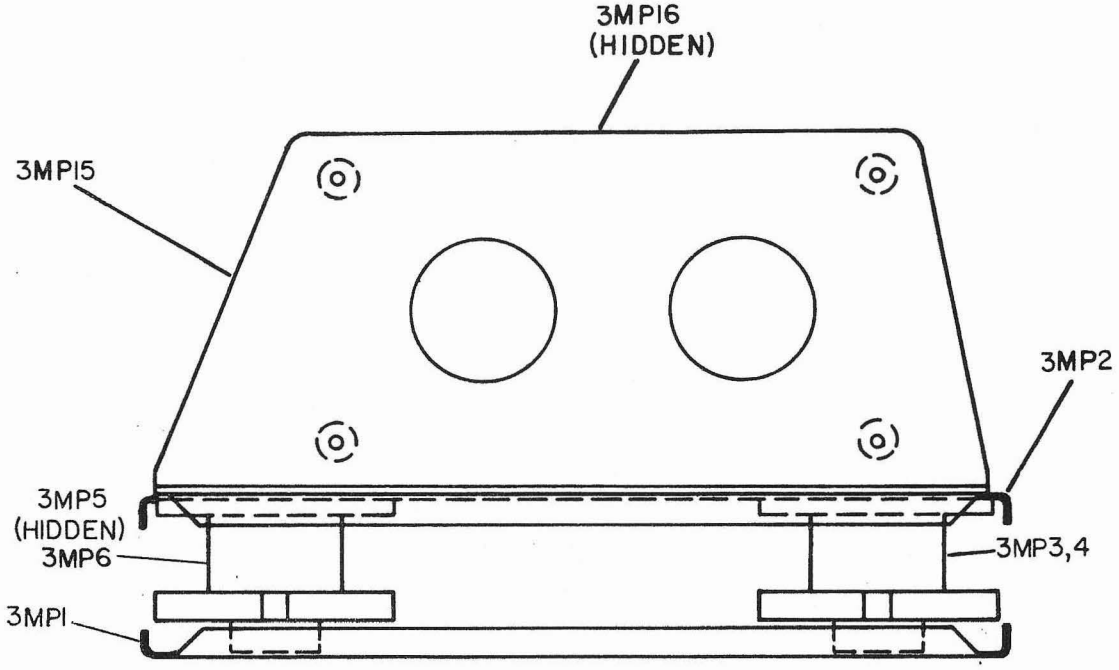

Figure 7-84. Shock Mount Base MT-3114A/UR,
Component Locations

CHAPTER 8

INSTALLATION

8-1. GENERAL.

8-2. This chapter provides information necessary for the unpacking, installation, inspection, checkout, initial turn-on and installation verification of Radio Receiver R-1051H/URR. Connectors to peripheral equipment are shown in figure 8-1.

8-3. SITE SELECTION (Figure 8-2).

8-4. The installation site must allow sufficient space around R-1051H/URR to provide for servicing the slide mounted chassis assembly when extended from the case, shock mount deflection (when MT-3114A/UR is used) and cable bends. Proximity to associated equipment must also be considered.

8-5. REFERENCE PUBLICATIONS.

8-6. General reference should be made to NAVSEA 0967-000-0110, Electronics Installation Maintenance Book - Installation Standards; MIL-STD-1310, Shipboard Bonding, Grounding and Other Techniques for Electromagnetic Compatibility and Safety; and to the separate manuals for the ancillary equipment (such as antenna system and teletype terminals) being used.

8-7. TOOLS AND MATERIALS REQUIRED FOR INSTALLATION.

8-8. No special tools are required for installation. Materials required are listed in table 8-1 and figure 8-3.

8-9. UNPACKING AND REPACKING.

8-10. Unpacking Radio Receiver R-1051H/URR is accomplished by carefully removing it from the shipping container. Be careful not to damage controls and connectors. Repack the R-1051H/URR for shipment or storage in accordance with MIL-P-116.

8-11. INSTALLATION PROCEDURES.

8-12. The method of installation of Radio Receiver R-1051H/URR to be used is determined by the using activity. Two types of installation are available; independent shock mounting on MT-3114A/UR and rack mounting.

8-13. INDEPENDENT SHOCK MOUNTING. Shock mounting R-1051H/URR on MT-3114A/UR requires the use of Shock and Vibration Mount Assembly 98738 - 228724-01, which includes hardware for mounting. Left and right mounting brackets are packed separately with Radio Receiver R-1051H/URR. To shock mount the receiver proceed as follows (Figure 8-2).

a. Attach left and right brackets part no's. 206206-21-11 and -22-11, respectively, to the receiver case. To attach a bracket use four each MS51958-63 machine screws, MS15795-809 flat washers and MS35338-138 lock washers.

WARNING

Do not overstress mounting bolts. Shock may cause bolts to shear.

b. Fasten the brackets to threaded inserts in Mounting Base Assembly 99A228732-01 MT-3114A/UR, using three each MS35307-332 cap screws, MS15795-812 flat washers and MS35338-140 lock washers in each bracket.

c. To attach Mounting Base MT-3114A/UR to the foundation follow the guidance of figure 8-2.

8-14. RACK MOUNTING. The R-1051H/URR may be mounted in a rack conforming to MIL-STD-189. For this purpose brackets will be furnished by the using activity, or if necessary, can be fabricated in accordance with Detail A of figure 8-2, sheet 2. For mounting in a rack, proceed as follows:

WARNING

Do not overstress mounting bolts. Shock may cause bolts to shear.

a. Attach brackets as instructed in paragraph 8-13, step a.
b. Fasten brackets to rack with hardware furnished by the using activity.

8-15. BONDING AND GROUNDING.

8-16. Ground straps Type III per MIL-STD-1310 are to be furnished by the installing activity. If necessary, remove paint from the surfaces to which ground straps are to be attached. Attach ground straps as shown in figure 8-2, sheet 2. An alternate ground stud ALTN GND is provided at the rear of the case (Figure 8-2, sheet 1).

8-17. PRIMARY POWER REQUIREMENTS.

8-18. The primary power requirement of Radio Receiver R-1051H/URR is 115 Vac, ±10%, 48 to 420 Hz, single phase. Power consumption is nominally 56 watts.

CAUTION

Do not connect primary power to AC PWR IN connector A1A1J3 on rear of R-1051H/URR case before measuring actual source voltage. If necessary, perform the procedure of paragraph 8-19.

8-19. POWER SUPPLY ADAPTATION. The power input is connected to the 115 volt tap on the primary side of power transformer A2T1 when the R-1051H/URR is shipped. If the supply voltage is not 115 Vac, the input connection must be changed to the appropriate tap. To change the power transformer tap connection:

a. Set MODE SELECTOR Switch A2-A14S2 to OFF, and disconnect primary power cable from AC PWR IN connector A1A1J3 on rear of receiver case.
b. Loosen six captive screws on receiver front panel and slide chassis assembly out from case until slides lock.

CAUTION

Hand guide chassis assembly cable at rear of chassis over front edge of case when tilting chassis assembly to vertical position.

c. Release latches and tilt chassis assembly 90 degrees to expose bottom. Be sure latches engage at 90 degree position.
d. Remove four flat head machine screws which fasten component shield A2MP99 covering Control Assembly A2A13 component board, and lift component shield from chassis.
e. Unscrew four hexagon spacers which hold A2A13 component board and move board aside to expose bottom of power transformer.
f. Unsolder wire connected to terminal 1 of power transformer and resolder to appropriate tap (terminal 2, 3, 4, or 5 (Figure 5-32, zones 17E-G).

NOTE

Do not unsolder common lead connected to transformer terminal 6.

g. Reassemble parts loosened and removed in steps d. and e., above.
h. Return chassis assembly to horizontal position. Release slide locks and slide chassis assembly into case. Secure chassis/front panel to case with six front panel screws.
i. Reconnect primary power cable to A1A1J3.

8-20. TRANSFORMERS IN BALANCED, GROUNDED, CENTER-TAP CIRCUIT. As supplied, the audio transformers in the IF/Audio Amplifier Assemblies A2A2 and A2A3 of R-1051H/URR do not have grounded center taps. If it is required that these transformers work into a balanced center-tap circuit, proceed as follows:

CAUTION

Do not ground center tap if working into an unbalanced circuit.

a. Perform steps a., b., and c. of paragraph 8-19 above.
b. Solder a jumper wire from A2E21 to A2E22 and a jumper wire from A2-E34 to A2E35.
c. Perform steps h. and i. of paragraph 8-19 above.

8-21. INTERCONNECTING CABLING.

8-22. Interconnecting cabling shall be accomplished in accordance with figure 8-4, using cable and connectors specified in table 8-1.

8-23. INTERCONNECTIONS. All connections are made at the rear of R-1051H/URR, except the receiver headset. When R-1051H/URR is installed separately, rf input is obtained by mating an M39012/01-0005 connector and the necessary length of RG-213/U coaxial cable with ANT connector A1-J23 (Figure 8-2).

8-24. OPERATION AS A REMOTE UNIT. When the R-1051H/URR is to be operated as a remote unit, make connections as follows:

a. Connect antenna as instructed in paragraph 8-23.
b. Connect switchboard remote audio lines to USB AUDIO OUT connector A1A1J5 and LSB AUDIO OUT connector A1A1J6 at rear of case, using cable assemblies specified in table 8-1.
c. Further instructions depend on equipment to be used with R-1051H/URR and are therefore beyond the scope of this publication. Refer to the technical manuals for the associated equipments.

8-25. OPERATION AS AN INDEPENDENT UNIT. To operate the R-1051H/URR as an independent unit make connections as follows:

a. Connect antenna as instructed in paragraph 8-23.
b. For USB, ISB (USB), RATT, CW and AM modes of operation connect headset to PHONE USB jack A2A14-J2 on front panel of receiver. For LSB mode of operation, connect headset to PHONE LSB jack A2A14-J1 on front panel of receiver.

NOTE

Headset may be used for monitoring when R-1051H/URR is operated as a remote unit. Connect headset in same manner as for independent operation.

8-26. OPERATION USING INTERNAL FREQUENCY STANDARD. For operation with the R-1051H/URR internal frequency standard, proceed as follows:

a. Set MODE SELECTOR Switch A2-A14S2 to STDBY.
b. Loosen six front panel screws and slide chassis assembly from case.
c. Check that 5 MHZ OSC SOURCE switch A2A5A2S1 at top of Frequency Standard Assembly A2A5 is in INT/COMP position.

NOTE

Assembly A2A5 is located at right rear of chassis.

d. Return chassis assembly to case and secure with six front panel screws.
e. Set MODE SELECTOR Switch A2-A14S2 to desired operating mode.

8-27. OPERATION USING EXTERNAL FREQUENCY STANDARD. The R-1051H/URR is normally operated using an external frequency standard. Proceed as follows:

a. Connect external frequency standard output to EXT 5 MHZ IN connector A1J25 at rear of case. Refer to table 8-1 for connector and cabling.
b. Set MODE SELECTOR Switch A2-A14S2 to STDBY.
c. Loosen six front panel screws and slide chassis assembly from case.
d. Set 5 MHZ OSC SOUCE switch A2-A5A2S1 to EXT NORMAL.

Table 8-1. Radio Receiver R-1051H/URR, Interconnecting Cable Assemblies

CABLE TYPE	CONDUCTORS	FROM		TO UNIT
		CONNECTOR PART NO.	CONNECTOR REF DES	
TNW-3	3	MS3106A16S-5S Cable clamp MS3057-8A	A1A1J3 (AC PWR IN)	External primary power source
TTSU-1-1/2	2	MS3106A10SL-4S with 06845-4032585-0701 strain relief boot	A1A1J5 (USB AUDIO OUT)	Remote audio output equipment
TTSU-1-1/2	2	MS3106A10SL-4S with 06845-4032585-0701 strain relief boot	A1A1J6 (LSB AUDIO OUT)	Remote audio output equipment
RG-213/U	Coaxial	M39012/01-0005	A1J23 (ANT 50 OHMS)	Antenna or antenna coupler (antenna lead-in)
RG-213/U	Coaxial	M39012/16-0001	A1J24 (INT 5 MHz OUT)	External remote or test equipment
RG-213/U	Coaxial	M39012/01-0005	A1J25 (EXT 5 MHz IN)	Optional external frequency standard
Cable type to be selected by installing activity to suit special applications		MS3114E14-12P	A1A1J4 (Remote control connector)	

e. Return chassis assembly to case and secure with six front panel screws.
f. Set MODE SELECTOR Switch A2-A14S2 to desired operating mode.

8-28. USE OF FREQUENCY STANDARD OUTPUT BY ANOTHER UNIT. If it is required to use the output of the R-1051H/URR internal frequency standard to operate another unit, proceed as follows:

a. Set MODE SELECTOR Switch A2-A14S2 to STDBY.
b. Loosen six front panel screws and slide chassis assembly from case.
c. Set 5 MHz OSC SOURCE switch A2-A5A2S1 to INT/COMP.
d. Return chassis assembly to case and secure with six front panel screws.
e. Connect cable between INT 5 MHZ OUT connector A1J24 at rear of case and frequency standard input connector of other unit. See table 8-1 for connector and cabling.
f. Set MODE SELECTOR Switch A2-A14S2 to desired operating mode.

NOTE

The output of the internal frequency standard (at INT 5 MHZ OUT connector A1J24) is disabled when the receiver is in the STDBY or OFF mode and is momentarily interrupted when the front panel MHz control setting is changed.

8-29. USE OF EXTERNAL FREQUENCY STANDARD FOR CALIBRATION. If it is required to use an external frequency standard for calibration of internal Frequency Standard Assembly A2A5, proceed as follows:

CAUTION

Do not adjust Frequency Standard Assembly A2A5 unless power has been applied and MODE SELECTOR Switch A2A14S2 has been in a position other than OFF for at least 96 hours. Most drift will occur during the first 60 minutes of warm-up. Thereafter, the error should be less than 1 part per 10^7 (0.5 Hz at 5 MHz).

a. Loosen six front panel screws and slide chassis assembly from case.
b. Set 5 MHz OSC SOURCE switch A2-A5A2S1 to INT/COMP.
c. Defeat interlock switch A1A2S1 by pulling plunger forward, place MODE SELECTOR Switch A2A2S2 in STDBY and allow 96 hours warm-up.
d. Connect external frequency standard to EXT 5 MHZ IN connector A1J25 at rear of case. Refer to table 8-1 for connector and cabling.
e. Observe indicator A2A5A2DS1. The difference, if any, between the output of Frequency Standard Assembly A2A5 and the frequency of the external standard is indicated by the flashing rate of A2A5A2DS1. For example: if the error is 1 part per 10^7, the flashing rate is once every two seconds.

NOTE

Indicator A2A5A2DS1 is an incandescent lamp. The lamp does not flash from fully off to on. The flashing to be observed is from dim to somewhat brighter. Observe carefully.

CAUTION

Do not attempt to adjust output frequency of A2A5 until it has been determined that the frequency is in error by a minimum five minute observation.

f. If required, calibrate the output frequency of A2A5 as instructed in steps 4.f. and 4.g. of table 6-1.

NOTE

If proper calibration cannot be achieved, Frequency Standard Assembly A2A5 requires depot repair.

g. Disconnect external frequency standard and set 5 MHz OSC SOURCE switch A2A5A2S1 to normal operating position.
h. Return chassis assembly to case and secure it.
i. Set MODE SELECTOR Switch A2-A14S2 to desired operating mode.

8-30. INSTALLATION CHECKOUT.

8-31. The procedures in the paragraphs which follow are intended to demonstrate that Radio Receiver R-1051H/URR has been properly installed, and that it operates within tolerance in the test phases.

8-32. PHASE 1 - INSTALLATION INSPECTION AND PRE-ENERGIZING PROCEDURES. Check each item in the following list by visual inspection or performance to ensure that all essentials of installation have been performed and that provisions for servicing have been made (Figures 8-1 through 8-4 for verification).

( ) Mounting of Radio Receiver R-1051H/URR is secure.
( ) Bonding and grounding is in accordance with MIL-STD-1310.
( ) Auxiliary equipment have been installed.
( ) Antenna has been properly installed and connected.
( ) Continuity exists in all interconnections.
( ) Test equipment listed in table 1-5 is on board.
( ) Documents listed in table 1-5 are on board.
( ) Test equipment is operating satisfactorily.
( ) Test equipment has been calibrated.
( ) APL is on board.
( ) COSAL includes the equipment data.
( ) All field changes, shipalts and mandatory retrofits have been accomplished.
( ) Sufficient clearance exists at front of installation to service R-1051H/URR properly.
( ) Sufficient clearance exists at rear of installation for access to rear connectors.
( ) Power transformer A2T1 adapted to existing primary input voltage.
( ) Radio Receiver R-1051H/URR can be turned on safely.

8-33. PHASE 2 - INITIAL TURN-ON AND PRELIMINARY TEST. Perform all steps of table 5-5.

8-34. PHASE 3 - INSTALLATION VERIFICATION TEST. Perform all performance tests of Chapter 4 of this manual. Troubleshooting references, where applicable, are given at the end of each step in Chapter 4. Enter results in appropriate spaces on installation standards summary sheet, table 8-2, on the following page. This sheet is provided for the purpose of recording the results of all installation checkout procedures for future reference. Upon successful completion of the installation verification test, the R-1051H/URR may be released to operating personnel.

Table 8-2. Radio Receiver R-1051H/URR, Installation Standards Summary

Input Voltage _____ Vac
Input Frequency _____Hz

(When reference standard tests are made)

Date _____
Serial Number or Model _____
Installed in ship or station _____
_____
Length of transmission line _____
_____

Record on this summary sheet the test indications which have been obtained during the installation verification test.

Table	Test No.	Ref. Std
4-3	(a)	____Check
4-4	(a)	____Check
	(b)	____Check
	(c)	____Sec
4-5	(a)	____Check
	(b)	____Check
	(c)	____Check
	(d)	____Vdc
4-6	(a)	____uV
	(b)	____uV
	(c)	____uV
	(d)	____uV
	(e)	____uV
4-7	(a)	____Hz
	(b)	____Hz
	(c)	____Hz
	(d)	____Hz
	(e)	____Hz
	(f)	____Hz
	(g)	____Hz
	(h)	____Hz
	(i)	____Check
	(j)	____Hz
	(k)	____Hz
	(l)	____Check
	(m)	____Check
4-9	(a)	____dB
	(b)	____dB
	(c)	____dB
	(d)	____dB
4-9	(e)	____dB
	(f)	____dB
	(g)	____dB
	(h)	____dB
	(i)	____dB
	(j)	____dB
	(k)	____dB
	(l)	____dB
	(m)	____dB
	(n)	____dB
	(o)	____dB
	(p)	____dB
4-10	(a)	____Vdc
	(b)	____Vdc
	(c)	____mVrms
	(d)	____Vdc
	(e)	____Vdc
	(f)	____Vdc
	(g)	____mVrms
	(h)	____mVrms
	(i)	____mVrms
4-11	(a)	____dBm
	(b)	____dBm
	(c)	____dBm
	(d)	____dBm
	(e)	____dBm
	(f)	____dBm
	(g)	____dBm
	(h)	____dBm
4-12	(a)	____mV
	(b)	____dB
	(c)	____mV

Table 8-2. Radio Receiver R-1051H/URR, Installation Standards Summary (Continued)

Table	Test No.	Ref. Std.
4-13	(a)	____Hz
	(b)	____mVrms
	(c)	____mVrms
	(d)	____Check
4-14	(a)	____mV
	(b)	____mV
	(c)	____mV
	(d)	____mV
	(e)	____mV
	(f)	____mV
	(g)	____kHz
	(h)	____kHz
4-15	(a)	____Vac
	(b)	____Vac
	(c)	____Vac
	(d)	____dBm
	(e)	____Vac
	(f)	____Vac
	(g)	____dBm
4-16	(a)	____mV
	(b)	____mV
	(c)	____Hz
	(d)	____mV

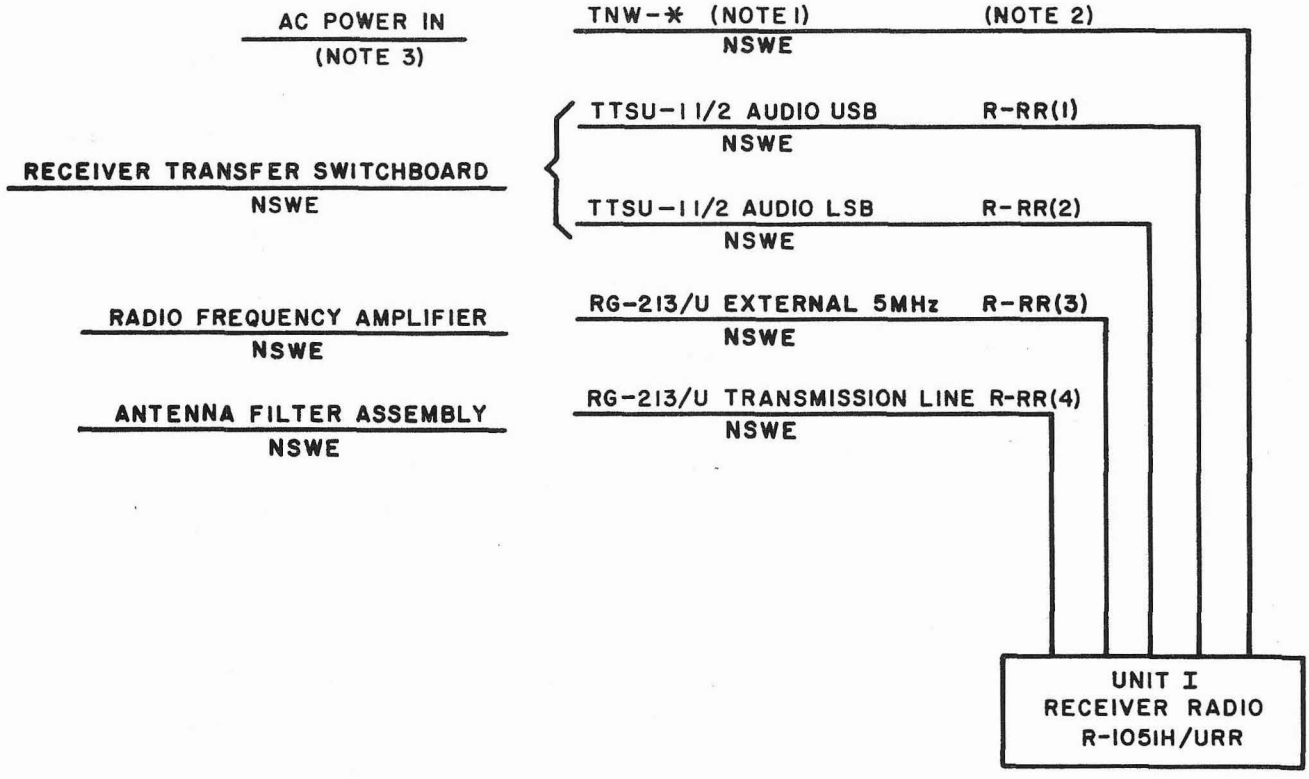

NOTES:

1. POWER CABLE IS TO BE TNW-3. ITS LENGTH SHALL NOT EXCEED 190 FEET.
2. THE INSTALLING ACTIVITY WILL ASSIGN THE NAVY CABLE DESIGNATION TO THE POWER CABLE.
3. PRIMARY POWER SOURCE REQUIREMENTS:
   (A) 115 VAC ±10%
   (B) SINGLE PHASE
   (C) 48Hz TO 420Hz
   (D) 1 PHASE, TYPE I POWER
   (E) 0.55 AMPS P.F. 0.89
   (F) POWER WATTS
   OPERATING -56
   STARTING -35
   STAND BY -18
   SECURED -0

REFERENCES:

1. DRAWING LIST—SEE DRAWING NO. 69P229032
2. LEGENDS
   NSWE: NOT SUPPLIED WITH EQUIPMENT
   SWE: SUPPLIED WITH EQUIPMENT

Figure 8-1. Radio Receiver R-1051H/URR, Cable Diagram

NOTES FOR FIGURE 8-2

1. FOR CONTRACT N00039-83-C0292 SHOCK MOUNT MT-3114A/UR 99A228746-01 IS PROVIDED WITH THE R-1051H/URR.
2. CLEARANCE ON EACH SIDE OF THE EQUIPMENT SHALL BE 6 INCHES. SIDE MOVEMENT DUE TO SHOCK MOUNTING MAY REACH A MAXIMUM OF 2.5 INCHES IN EITHER DIRECTION.
3. MOUNTING BRACKET MANUFACTURING DETAILS:
   A. MATERIAL - 0.125" THICK QQ-S-766, CLASS 302, CONDITION A (CRES).
   B. FINISH: PASSIVATION PER QQ-P-35.
   C. USE EXISTING MOUNTING SCREWS.
   D. MOUNTING BRACKET IS INTENDED TO PROVIDED BONDING AND GROUNDING BETWEEN RACK AND R-1051H/URR.
4. BONDING AND GROUNDING.
   A. BONDING AND GROUNDING SHALL BE IN ACCORDANCE WITH MIL-STD-1310 EXCEPT THAT GROUND STRAPS SHALL BE INSTALLED AT DIAGONALLY OPPOSITE CORNERS ON THE SIDES OF THE EQUIPMENT. ENSURE THAT GROUNDING SURFACES ARE PREPARED IN ACCORDANCE WITH MIL-STD-1310.
5. ALL DIMENSIONS ARE IN INCHES.
6. THE ENCLOSURE MATERIAL IS ALUMINUM.
7. LENGTH OF SCREW HEX HD WAS CALCULATED FOR A MOUNTING SURFACE THICKNESS UP TO 0.25 IN. IF THE MOUNT MT-3114A/UR 99A228746-01 IS TO BE MOUNTED ON SUPPORT MATERIAL GREATER THAN 0.25 IN., THE INSTALLING ACTIVITY MUST INCREASE THE LENGTH OF THIS ITEM.

REFERENCES:

1. DRAWING LIST - SEE DRAWING 69P229032.

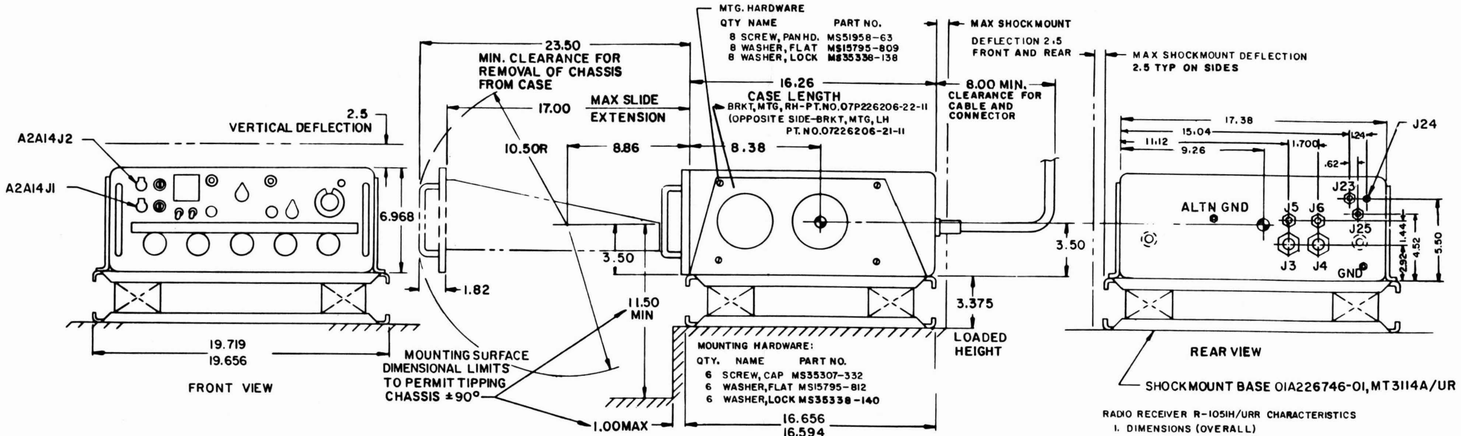

CONNECTOR IDENTIFICATION				
R-1051H/URR			MATING CONNECTOR	
PART NUMBER AND REF DESIG.	PIN NO.	FUNCTION	DESCRIPTION	CONNECTOR TYPE
A2A14J1 M641/12-1	TIP SLEEVE	ISB/LSB AUDIO, 600 OHMS UNBALANCED GROUND	HEAD PHONE ISB/LSB AUDIO	PJ-0558
A2A14J2 M641/12-1	TIP SLEEVE	ISB/RAT T/USB/AM/CW AUDIO 600 OHM UNBAL GROUND	HEAD PHONE ISB/RAT T/USB/AM/CW AUDIO	PJ-0558
A1A1J3 SIMILAR TO MS 3102 EXCEPT JAM NUT MOUNTING	A B C	115 VAC GROUND 115 VAC COMMON	PRIMARY POWER SOURCE (115 VAC SUPPLY)	MS 3106A-16S-5S CABLE CLAMP MS 3057-8A
A1A1J4 SIMILAR TO MS 3114		NOT CONNECTED		MS 3114E14-12P
A1A1J5 SIMILAR TO MS 3102 EXCEPT JAM NUT MTG	A B	ISB/RAT T/USB/AM/CW AUDIO OUTPUT	AUDIO TO REMOTE SYSTEM	MS 3106A-10SL-4S STRAIN RELIEF BOOT 06845-4032585-0701
A1A1J6, SIMILAR TO MS 3102 EXCEPT JAM NUT MTG	A B	ISB/LSB AUDIO OUTPUT	AUDIO TO REMOTE SYSTEM	MS 3106A-10SL-4S STRAIN RELIEF BOOT 06845-4032585-0701
A1J23, SIMILAR TO UG-159D/U			ANTENNA SYSTEM 50 OHMS	M39012/01-0005 (N)
A1J24, SIMILAR TO UG-909C-U			INTERNAL 5 MHz OUTPUT	M39012/16-0001 (BNC)
A1J25, SIMILAR TO UG-159D/U			EXTERNAL 5 MHz INPUT	M39012/01-0005 (N)

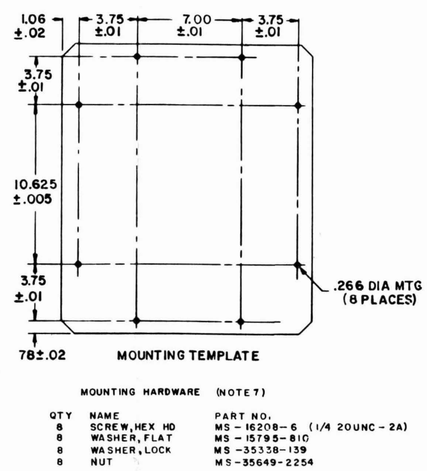

MOUNTING HARDWARE (NOTE 7)

QTY	NAME	PART NO.
8	SCREW, HEX HD	MS-16208-6 (1/4 20UNC-2A)
8	WASHER, FLAT	MS-15795-810
8	WASHER, LOCK	MS-35338-139
8	NUT	MS-35649-2254

RADIO RECEIVER R-1051H/URR CHARACTERISTICS
1. DIMENSIONS (OVERALL)
   a. HEIGHT – 7 IN.
   b. WIDTH – 17.38 IN.
   c. DEPTH – 18.9 IN.
   d. VOLUME – 1.33 CU. FT
2. WEIGHT – 75 LB. MAX.
3. ELECTRICAL
   a. PRIMARY POWER: 115 VAC ± 10% 0.55 AMPS PF.89 SINGLE PHASE, 48 TO 420Hz TYPE 1 PWR.
   b. POWER CONSUMPTION: 56 WATTS (188 BTU/HR)
   c. AUDIO OUTPUT – 60 MILLIWATTS INTO 600 OHMS
4. ENVIRONMENTAL
   a. TEMPERATURE LIMITS: 0°C TO 50°C
      HUMIDITY – 0 TO 95%
      HEAT DISSIPATION – 56 WATTS

SHOCK MOUNT BASE 01A226746-01, MT3114A/UR
1. DIMENSIONS (OVERALL)
   a. HEIGHT – 3.62 IN.
   b. WIDTH – 19.71 IN.
   c. DEPTH – 16.66 IN.
   d. VOLUME – 0.81 CU. FT.
2. WEIGHT – 18 LB
3. DETAIL DATA
   a. TYPE MOUNTS: RESILIENT
   b. NUMBER OF MOUNTS: 1
   c. UPPER LOAD RATINGS 75 LBS.
   d. WT. DISTRIBUTION/MT: 75 LBS.
   e. MANUFACTURER: STEWART-WARNER ELECTRONICS 1300 N. KOSTNER CHICAGO, ILL. 60651

CRATED DATA R1051H/URR
1. DIMENSIONS (OVERALL)
   a. HEIGHT – 13.25 IN.
   b. WIDTH – 24.00 IN.
   c. DEPTH – 32.00 IN.
   d. VOLUME – 5.2 CU.FT.
   e. WEIGHT – 85 LB.

CRATED DATA MT 3114A/UR3
   a. VOLUME – 1.1 CU.FT.
   b. WEIGHT – 23 LBS.

Figure 8-2. Radio Receiver R-1051H/URR, Outline And Mounting Dimensions (Sheet 1 of 2)

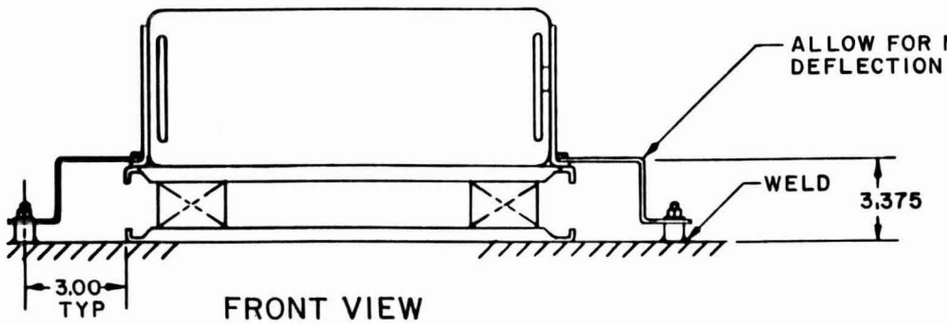

FRONT VIEW
SHOWING METHOD OF BONDING AND GROUNDING

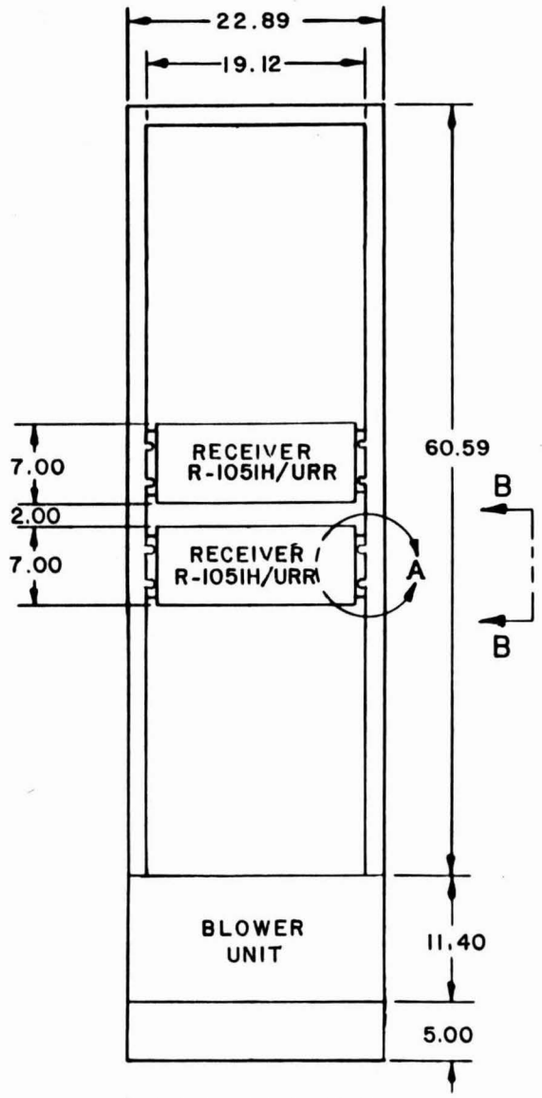

EQUIPMENT RACK

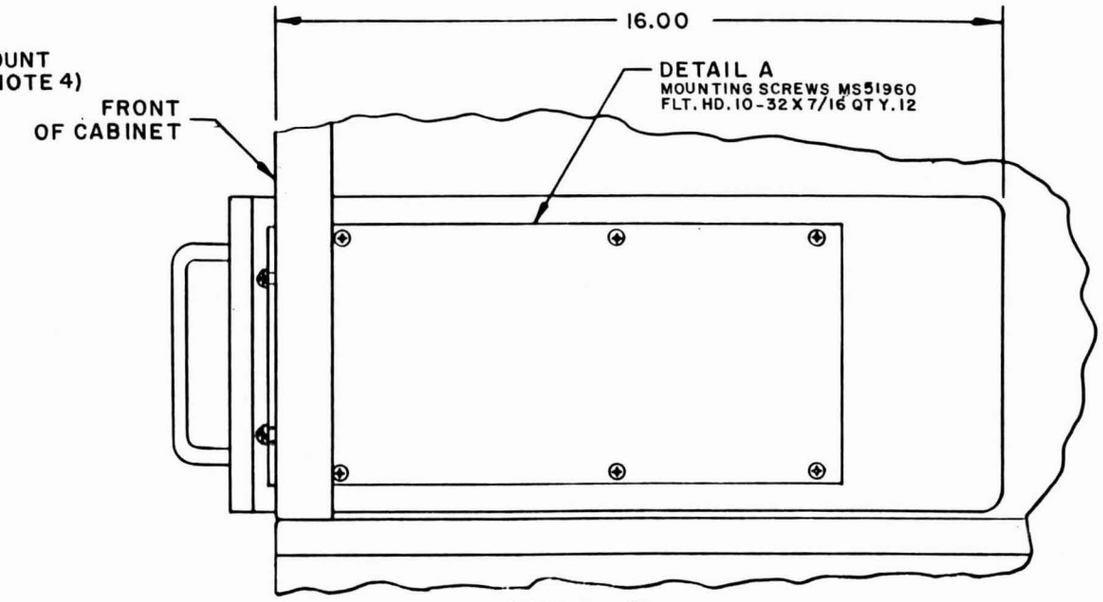

VIEW B - B
WITH SIDE SKIN REMOVED

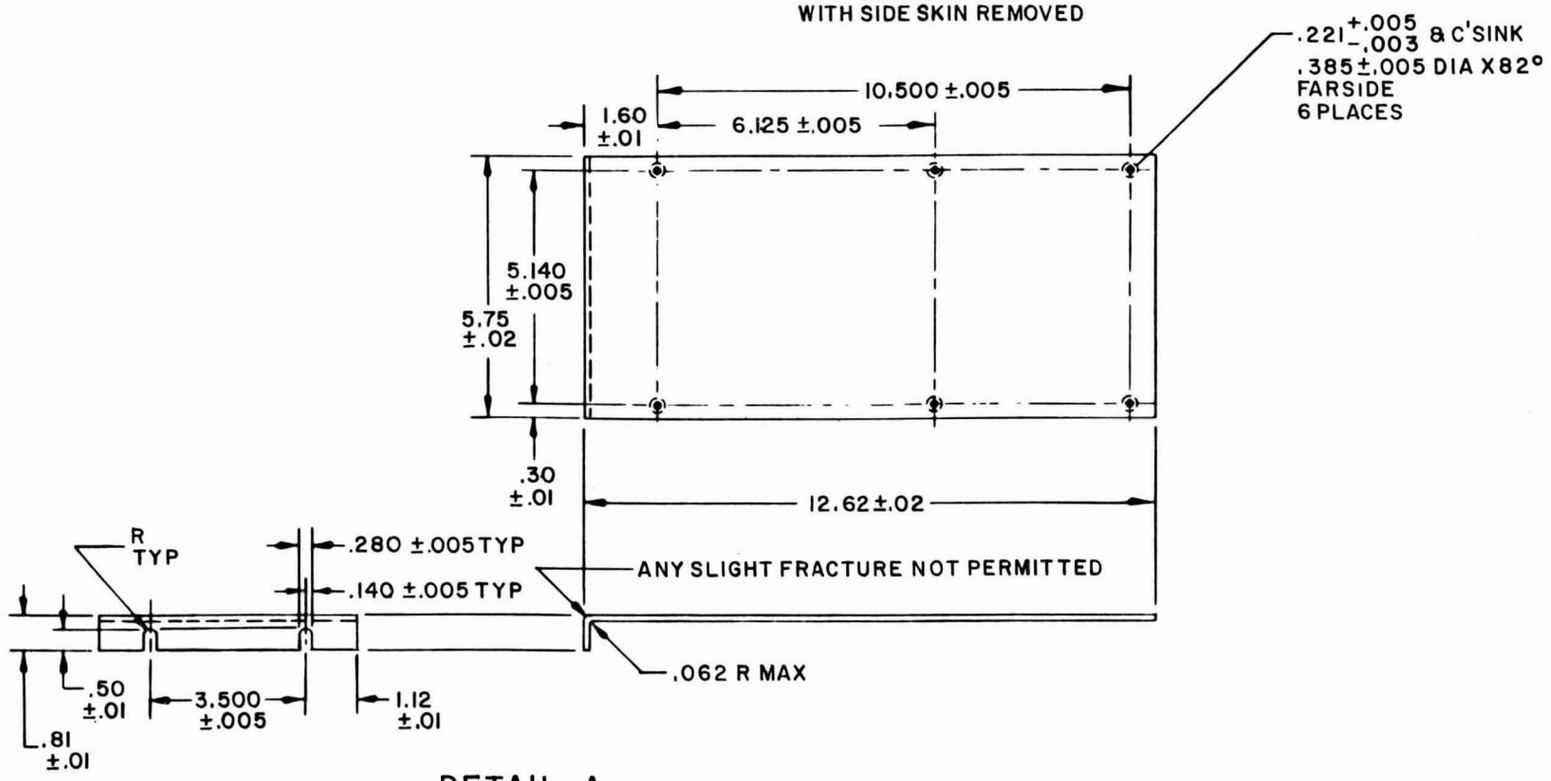

DETAIL - A
MOUNTING BRACKET FOR RACK MOUNTING
(SEE NOTE 3)
REF. PT. NO. 4010005-0001 (CODE IDENT. 06845)

Figure 8-2. Radio Receiver R-1051H/URR, Outline and Mounting Dimensions (Sheet 2 of 2)

NOTES FOR FIGURE 8-3

1. LENGTH OF ITEM 9, SCREW, HEX HD., WAS CALCULATED FOR A MOUNTING SURFACE THICKNESS UP TO 0.025 IN. IF THE MOUNTING BASE MT-3114A/UR IS TO BE MOUNTED ON SUPPORT MATERIAL GREATER THAN 0.25 IN., THE INSTALLING ACTIVITY MUST INCREASE THE LENGTH OF THIS ITEM.

2. POWER CABLE IS TO BE TNW-3; ITS LENGTH SHALL NOT EXCEED 190 FEET.

3. FOR CONTRACT N00039-83-C-0292 SHOCK MOUNT BASE MT-3114A/UR IS PROVIDED WITH R-1051H/URR.

REFERENCES:

1. DRAWING LIST - SEE DRAWING 63P229032.

ITEM NO	QUANTITY NSWE	QUANTITY SWE	NOMENCLATURE	PART, TYPE OR MODEL NUMBER	MANUFACTURERS NAME OF FEDERAL SUPPLY CODE	REMARKS
1		1	RADIO RECEIVER	R-1051H/URR	98738	
2		1	KIT, CONNECTOR MATING CONSISTING OF	78A226005-21-11	98738	
		2	CONNECTOR PLUG	MS-3106-A-10SL-4S		FOR REMOTE AUDIO
		2	BOOT, STRAIN RELIEF	4032585-0701	06845	
		1	CONNECTOR, PLUG	MS-3106-A-16S-5S		PRIMARY POWER
		1	CABLE CLAMP	MS-3057-8A		
		2	CONNECTOR, COAXIAL	M39012/01-0005		TRANSMISSION LINE
		1	CONNECTOR, PLUG	MS-3116-F-14-12S		SPECIAL APPLICATION
		1	CONNECTOR, COAXIAL	M39012/16-0101		
		1	INSTRUCTION SHEET	68P226036		
3	1		MOUNTING BASE ASSEMBLY CONSISTING OF:	99A228732-01	98738	USED TO MOUNT R-1051H/URR TO
	1		BASE, SHOCK MOUNT	MT-3114A/UR		01A228746-01,
	1		BRACKET, MOUNTING LEFT	07P226206-21-11		MT-3114A
	1		BRACKET, MOUNTING RIGHT	07P226206-22-11		
	8		SCREW, MACHINE	MS51958-63 (10-32x1/2)		
	8		WASHER, LOCK	MS35338-138 (.190)		
	8		WASHER, FLAT	MS15795-809 (.250)		
	6		SCREW, CAP	MS35307-332 (5/16x3/4)		
	6		WASHER, FLAT	MS51795-812 (.344)		
	6		WASHER, LOCK	MS35338-140 (5/16)		
4	AR		CABLE	TTSU 1-1/2		LENGTH AS REQUIRED FOR REMOTE AUDIO
5	AR		COAXIAL CABLE	M17/074-RG213		LENGTH AS REQUIRED - TRANSMISSION LINE
6	AR		CABLE	TNW-3(2)		LENGTH AS REQUIRED - PRIMARY POWER
7	1		CONNECTOR COAXIAL	M39012/01-0005		EXT. FREQ. STD. INPUT
8	AR		COAXIAL CABLE	M17/074-RG213		EXT. FREQ. STD. INPUT
9	8		SCREW, HEX. HD.	MS16208-6 (1/4-20x7/8)		ITEMS 9 THROUGH 12
10	8		FLAT WASHER	MS15795-810 (.281)		REQUIRED TO INSTALL
11	8		LOCK WASHER	MS35338-139 (1/4)		MOUNTING BASE (NOTE 1)
12	8		NUT	MS35649-2254 (1/4-20)		
13	2		MOUNTING BRACKET AND	4010005-0001	06845	USED TO MOUNT
14	12		SCREW, FLAT HD.	MS51960-64 (10-32x7/16)		R-1051H/URR IN RACK
15		1	STRAP, GROUND	4013368-0002	06845	USED TO GROUND R-1051H/URR TO SHIP STRUCTURE

Figure 8-3. Radio Receiver R-1051H/URR, Summary List of Installation Materials

NOTES FOR FIGURE 8-4

GENERAL NOTES

1. J4 IS PROVIDED FOR SPECIAL USE WITH AUTHORIZED AN/URT-2 SYSTEM INSTALLATIONS.

2. MAXIMUM ALLOWABLE VOLTAGE DROP IS 11.5 VAC BASED ON 115 VAC AVAILABLE AT SHIP'S POWER PANEL. WHEN POWER PANEL VOLTAGE IS LESS THAN 115 VAC, CABLE VOLTAGE DROP SHALL NOT REDUCE AC VOLTAGE AVAILABLE AT THE R-1051H/URR BELOW 103.5 VAC.

3. POWER CABLE IS TO BE TNW-3; ITS LENGTH SHALL NOT EXCEED 190 FEET.

4. THE NUMBER IN PARENTHESIS IN THE NAVY CABLE DESIGNATIONS ARE FOR REFERENCE ONLY: THE ACTUAL NUMBERS ARE TO BE ASSIGNED BY THE INSTALLING ACTIVITY.

CABLE TYPE AND SIZE TTSU1-1/2 NOTE 1	ACTIVE WIRES 12	CABLE DESIGNATION NOTE 1
	UNIT A	UNIT B
UNIT NUMBER	UNIT 1	
UNIT NAME	RADIO RECEIVER R-1051H/URR	AS REQUIRED BY INSTALLING ACTIVITY
CABLE CONNECTOR	MS3116F14-12S	

UNIT A TERM. NO.	WIRE NO.	COLOR CODE	UNIT B TERM. NO.	FUNCTION
J4 PIN G	1			SPARE (NOTE 1)
L	2			
K	3			
D	4			
C	5			
A	6			
B	7			
M	8			
H	9		AUX 600 OHM AUDIO OUTPUT	USB/RATT/AM/CW/ISB
J	10			
E	11		AUX 600 OHM AUDIO OUTPUT	LSB/ISB
J4 PIN F	12			

CABLE TYPE AND SIZE TNW (NOTE 3)	ACTIVE WIRES 3	CABLE DESIGNATION (NOTE 4)
	UNIT A	UNIT B
UNIT NUMBER	UNIT 1	SHIPS POWER
UNIT NAME	RADIO RECEIVER R-1051H/URR	
CABLE CONNECTOR	MS3106A16SSS CLAMP MS 3057-8A	DETERMINED BY INSTALLATION ACTIVITY

UNIT A TERM. NO.	WIRE NO.	COLOR CODE	UNIT B TERM. NO.	FUNCTION
J3 PIN A	1	BLACK		115 VAC
B	2	RED		GND
C	3	WHITE		115 VAC RTN

CABLE TYPE AND SIZE TTSU-1-1/2	ACTIVE WIRES 2	CABLE DESIGNATION R-RR(1)
	UNIT A	UNIT B
UNIT NUMBER	UNIT 1	NONE
UNIT NAME	RADIO RECEIVER R-1051H/URR,	RECEIVER TRANSFER SWITCHBOARD
CABLE CONNECTOR	MS3106A10SL-4S 4032585-0701 BOOT	NSWE

UNIT A TERM. NO.	WIRE NO.	COLOR CODE	UNIT B TERM. NO.	FUNCTION
J5 PIN A	1	WHITE		AUDIO USB
J5 PIN B	2	BLACK		AUDIO USB
SPARE	3	RED		NOT CONNECTED

CABLE TYPE AND SIZE TTSU-1-1/2	ACTIVE WIRES 2	CABLE DESIGNATION R-RR(2)
	UNIT A	UNIT B
UNIT NUMBER	UNIT 1	NONE
UNIT NAME	RADIO RECEIVER, R-1051H/URR	RECEIVER TRANSFER SWITCHBOARD
CABLE CONNECTOR	MS3106A10SL4S 4032585-0701 BOOT	NSWE

UNIT A TERM. NO.	WIRE NO.	COLOR CODE	UNIT B TERM. NO.	FUNCTION
J6 PIN A	1	WHITE		AUDIO LSB
J6 PIN B	2	BLACK		AUDIO LSB
SPARE	3	RED		NOT CONNECTED

CABLE TYPE AND SIZE RG-213/U	ACTIVE WIRES 1	CABLE DESIGNATION R-RR (3)
	UNIT A	UNIT B
UNIT NUMBER	UNIT 1	NONE
UNIT NAME	RADIO RECEIVER R-1051H/URR	RADIO FREQUENCY AMPLIFIER
CABLE CONNECTOR	M39012/01-0005	NSWE

UNIT A TERM. NO.	WIRE NO.	COLOR CODE	UNIT B TERM. NO.	FUNCTION
J25				EXTERNAL 5 MHz

CABLE TYPE AND SIZE RG-213/U	ACTIVE WIRES 1	CABLE DESIGNATION R-RR (4)
	UNIT A	UNIT B
UNIT NUMBER	UNIT 1	NONE
UNIT NAME	RADIO RECEIVER R-1051H/URR	ANTENNA FILTER ASSEMBLY
CABLE CONNECTOR	M39012/01-0005	NSWE

UNIT A TERM. NO.	WIRE NO.	COLOR CODE	UNIT B TERM. NO.	FUNCTION
J23				TRANSMISSION LINE

CABLE TYPE AND SIZE	ACTIVE WIRES	CABLE DESIGNATION
	UNIT A	UNIT B
UNIT NUMBER		
UNIT NAME		
CABLE CONNECTOR		

UNIT A TERM. NO.	WIRE NO.	COLOR CODE	UNIT B TERM. NO.	FUNCTION

Figure 8-4. Radio Receiver R-1051H/URR, Cable Running Sheets

ALPHABETICAL INDEX

Subject	Paragraph, Figure, Table Number
A	
AC Power Distribution	F 5-14
Alinement and Adjustments:	
Electronic	6-6, T 6-1 thru T 6-7
Mechanical	6-9
Antenna Overload Assembly A2A9:	
Circuit Level Description	3-132
Parts Location Illustration	F 7-77
Repair	6-117
Assemblies and Reference Designations	1-12, 7-2, 7-3, T 1-1, T 7-1
Attaching Hardware, List of	7-8, T 7-4
Audio Amplification:	
Fault Logic Diagram	F 5-23, F 5-24
Functional Description	3-63
Signal Flow Diagram	F 5-5, F 5-6
Audio Level Meter Calibration	T 4-9
Automatic Gain Control:	
Check	T 4-11
Fault Logic Diagram	F 5-25
Functional Description	3-60
Signal Flow Diagram	F 5-7
B	
Beat Frequency Oscillation:	
Fault Logic Diagram	F 5-26
Functional Description	3-58
Signal Flow Diagram	F 5-8
Bonding and Grounding	8-15
C	
Cable Assemblies	F 8-4, T 8-1
Case. See Receiver Case A1.	
Chain-Drive Mechanism:	
Alinement and Adjustment	6-10
Cleaning and Inspection	4-5, T 4-2
Description	3-119
Mechanical Synchronization Check	T 4-8
Parts Location	F 7-5, F 7-6
Repair	6-37
Chassis. See Receiver Chassis Assembly A2	
Checkout, Installation	8-30

ALPHABETICAL INDEX

Subject — Paragraph, Figure, Table Number

C (Cont.)

Circuit Level Descriptions 3-187
Code Generator Assembly. See Receiver Code Generator Assembly A2A7.
Common Item Descriptions, List of ..... 7-7, T 7-3
Control:
- Diagram ..... 5-20, F 5-19
- Functional Description 3-108
- Hz Synthesizer Tuning Control ..... 3-114, T 3-2
- Overall Receiver Tuning Control 3-109

Control Assembly. See Receiver Control Assembly A2A13.
Controls, Indicators and Connectors:
- Maintenance ..... F 2-1, T 2-4
- Operating ..... 2-3, F 2-1, T 2-1

Corrective Maintenance:
- Adjustments and Alinements, General 6-4
- Repair, General 6-12

Coupler Adjustment 6-11
Crystal Complement ..... T 1-3

D

Description of Equipment 1-8
Drive Chain Adjustment 6-10

E

Electrical Characteristics 1-11
Electronic Adjustments and Alinements:
- Bench Test Setups ..... F 6-1 thru F 6-6
- Procedures ..... 6-7, T 6-1 thru 6-7
- Safety Precautions 1-1, 4-8
- Test Equipment Required 6-8

Equipment and Publications Required but Not Supplied ..... 1-17, T 1-5
Equipment, Accessories and Documents Supplied ..... 1-15, T 1-4

F

Factory Changes ..... 1-21, T 1-7
Fault Logic Diagrams ..... 5-21, F 5-20 thru F 5-31
Field Changes ..... 1-21, T 1-8
Filter Box Assembly A1A1:
- Circuit Level Description 3-123
- Parts Location Illustration ..... F 7-3

500 kHz Gating:
- Circuit Level Description 3-145

ALPHABETICAL INDEX

Subject	Paragraph, Figure, Table Number
F (Cont.)	
Functional Description	3-57
Signal Flow Diagram	F 5-4
Frequency Generator Subassembly A2A6A16:	
Adjustment and Alinement	T 6-6
Circuit Level Description	3-199
Fault Logic Diagram	F 5-29
Functional Description	3-85
Maintenance Schematic Diagram	F 5-42
Parts Location Illustration	F 7-72
Signal Flow Diagram	F 5-11
Frequency Standard Assembly A2A5:	
Adjustment and Alinement	T 6-5
Circuit Level Description	3-167
Maintenance Schematic Diagram	F 5-36
Output Checks	T 4-16
Parts Location Illustrations	F 7-60, F 7-61
Repair	6-82
Switching and Oscillator Check	T 4-4
Frequency Synthesis and Translation:	
Functional Block Diagram	F 3-2
Functional Description	3-81, T 3-1
Front Panel Assembly A2A14:	
Functional Description	3-125, 3-126
Parts Location Illustration	F 7-7
Maintenance Schematic Diagram	F 5-32
Repair	6-30, 6-33
Functional Characteristics	T 1-2
Functional Description:	
Block Diagram	F 3-1
Circuit Level Descriptions	3 120
Major Functional Descriptions	3-20
Overall Functional Descriptions	3-3
I	
IF Amplification and Control:	
Fault Logic Diagram	F 5-22
Functional Description	3-46
Signal Flow Diagram	F 5-3
IF/Audio Amplifier Assembly. See Receiver IF/Audio Amplifier. Assemblies A2A2 and A2A3.	
Indicator Lamp Index	T 5-3
Injection Frequencies and Switching Control	T 3-1, T 3-2, T 3-3

ALPHABETICAL INDEX

Subject — Paragraph, Figure, Table Number

I (Cont.)

Inspection Requirements ..... T 6-8
Installation:
- Checkout 8-30
- Diagram ..... F 8-2
- Procedures 8-11
- Unpacking and Repacking 8-9

Installation Standards Summary Sheet ..... 8-34, T 8-2
Integrated Circuits Simplified Schematic Diagrams ..... F 3-3 thru F 3-23
Interconnections ..... 8-23, T 8-1
Interference Operation ..... 2-7, T 2-3
Interlock ..... F 2-1
Interlock Switch Check ..... T 4-5

M

Chassis Assembly. See Receiver Chassis Assembly A2.
Maintenance:
- Adjustments and Alinements ..... 6-4, T 6-1 thru T 6-7
- Controls and Connectors ..... 2-3, F 2-1, T 2-1
- Corrective 6-1
- Operator's Maintenance Procedures 2-11, T-2-5
- Parts List ..... 7-5, T 7-2
- Preventive ..... 4-5, T 4-2
- Repair Methods 6-15
- Scheduled Maintenance Index ..... 4-3, T 4-1
- Schematic Diagrams ..... 5-22, F 5-33 thru F 5-46
- Turn-on Procedure ..... 5-12, T 5-5
- Unscheduled Maintenance Checks ..... T 4-10, T 4-12 thru T 4-16

Manufacturers, List of ..... 7-9, T 7-5
Mechanical Adjustments 6-9
Mechanical Synchronization and Lubrication Check ..... T 4-8
Meter Amplifier/Driver Assembly A2A14A12:
- Adjustments and Alinements, General ..... 6-4, T 4-9
- Circuit Level Description 3-130
- Fault Logic Diagram ..... F 5-23, F 5-24
- Functional Description 3-66
- Maintenance Schematic Diagram ..... F 5-32
- Parts Location Illustration ..... F 7-82
- Signal Flow Diagram ..... F 5-5, F 5-6

Mode Selector Assembly. See Receiver Mode Selector Assembly A2A1.
Mounting ..... 8-13, 8-14, F 8-2

ALPHABETICAL INDEX

Subject — Paragraph, Figure, Table Number

N

Nonstandard Abbreviations ..... 1-19, T 1-6

O

100 kHz Synthesizer Subassembly A2A6A17:
- Adjustment and Alinement ..... T 6-6
- Circuit Level Description 3-238
- Fault Logic Diagram ..... F 5-30
- Functional Description 3-92
- Maintenance Schematic Diagram ..... F 5-43
- Parts Location Illustration ..... F 7-73
- Signal Flow Diagram ..... F 5-12

+110 V Distribution ..... 3-105, F 5-17

Hz Control and Vernier Assembly A2A14A11:
- Circuit Level Description 3-135
- Parts Location Illustration ..... F 7-80
- Repair 6-34, 6-114

Operation:
- Emergency Operating Procedures ..... 2-7, T 2-4
- Interference Operation ..... 2-7, T 2-3
- Operating Controls, Indicators and Connectors ..... 2-3, F 2-1, T 2-1
- Normal Operating Procedures ..... 2-9, T 2-2
- Operator's Maintenance Procedures ..... 2-11, T 2-5

Overall Adjustment and Alinement ..... T 6-1
Overall Block Diagram ..... F 3-1
Overall Functional Description 3-3
Overall Receiver Check ..... T 4-3

P

Parts List ..... 7-1, 7-5, T 7-2
Parts Location Illustrations ..... 7-10, F 7-1 thru F 7-84
Performance Tests ..... 4-7, T 4-3 thru T 4-16
Physical Characteristics 1-10
Power Distribution:
- Primary Voltage Derivation and Control 3-19
- Diagrams ..... 5-19, F 5-14 thru F 5-18
- Functional Description 3-100
- +5 V ..... 3-103, F 5-16
- +110 V ..... 3-105, F 5-17
- -30 V ..... 3-106, F 5-18
- +20 V ..... 3-103, 3-104, F 5-16
- +28 V ..... 3-92, F 5-15

ALPHABETICAL INDEX

Subject	Paragraph, Figure, Table Number
Power Supply Adaptation	8-19
Power Supply Subassembly A2A6A15:	
Circuit Level Description	3-255
Maintenance Schematic Diagram	F 5-41
Parts Location Illustration	F 7-71
Preventive Maintenance Procedures	4-5, T 4-2
Primary Power Requirements	8-17
Protective Devices Index	5-10, T 5-4
R	
Radio Receiver R-1051H/URR:	
Corrective Maintenance	6-1
Frequency Locking Action and Vernier Operation Check	T 4-7
Functional Description	3-3
General Information	Chapter 1
Installation	8-1
Operation	2-1
Parts List	7-1, 7-2
Scheduled Maintenance	4-1
Sensitivity Check	T 4-6
Troubleshooting	5-1
Receiver Case A1:	
Circuit-Level Description	3-122
Maintenance Schematic Diagram	F 5-32
Parts Location Illustrations	7-10, F 7-1, F 7-2
Repair	6-20
Receiver Chassis Assembly A2:	
Circuit Level Description	3-125
Maintenance Schematic Diagram	F 5-32
Parts Location Illustrations	F 7-4 thru F 7-6
Repair	6-37
Receiver Code Generator Assembly A2A7:	
Functional Description	3-109, T 3-2
Maintenance Schematic Diagram	F 5-46
Parts Location Illustration	F 7-76
Receiver Control Assembly A2A13:	
Adjustment	T 6-7
Circuit Level Description	3-128
Parts Location Illustration	F 7-79
Performance Check	T 4-10
Repair	6-111
Receiver IF/Audio Amplifier Assemblies A2A2 and A2A3:	
Adjustment and Alinement	T 6-3
Check	T 4-15
Circuit Level Description	3-146

ALPHABETICAL INDEX

Subject — Paragraph, Figure, Table Number

R (Cont.)

Maintenance Schematic Diagram ..... F 5-34
Parts Location Illustrations ..... F 7-12 thru F 7-15
Performance Test ..... T 4-15
Repair 6-56, 6-60
Receiver Mode Selector Assembly A2A1:
Adjustment and Alinement ..... T 6-2
Circuit Level Description 3-138
Maintenance Schematic Diagram ..... F 5-33
Parts Location Illustrations ..... F 7-8 thru F 7-11
Performance Test ..... T 4-14
Repair 6-50
Reference Data ..... 1-8, T 1-2
Reference Designations ..... 1-13, 7-3, T 1-1, T 7-1
Relay and Indicator Lamp Indices ..... 5-8, T 5-2, T 5-3
Repair:
Instructions 6-12
Receiver Chassis Assembly A2 6-30
Tuning Chain-Drive Mechanism 6-35
Rf Amplification Selection, Tuning and Overload Protection:
Fault Logic Diagram ..... F 5-20
Functional Description 3-24
Signal Flow Diagram ..... F 5-1
RF Amplifier Assembly A2A4:
Adjustment and Alinement ..... T 6 4
Check ..... T 4-12
Circuit Level Description 3-163
Maintenance Schematic Diagram ..... F 5-35
Parts Location Illustrations ..... F 7-16 thru F 7-59
Performance Test ..... T 4-12
Repair 6-72
Rf-to-IF Conversion:
Fault Logic Diagram ..... F 5-21
Functional Description 3-31
Signal Flow Diagram ..... F 5-2
RF Translator Subassembly A2A6A8:
Adjustment and Alinement ..... T 6-6
Circuit Level Description 3-186
Maintenance Schematic Diagram ..... F 5-38
Parts Location Illustration ..... F 7-68
Repair 6-96

ALPHABETICAL INDEX

Subject	Paragraph, Figure, Table Number
S	
Safety Precautions	1-1, 4-8
Scheduled Maintenance:	
Index	4-3, T 4-1
Performance Tests	4-7, T 4-3 thru T 4-16
Preventive	4-5, T 4-2
Schematic Diagrams	F 5-32 thru F 5-46
Shock and Vibration Mount Assembly (Unit 3):	
Mounting Configurations	F 8-2
Parts Location Illustration	F 7-84
Repair	6-119
Signal Flow Diagrams	5-18, F 5-1 thru F 5-13
Site Selection	8-3
Simplified Schematic Diagrams	F 3-3 thru F 3-23
Standard Frequency Generation and Distribution:	
Circuit Level Description	3-167
Fault Logic Diagram	F 5-27
Functional Description	3-71
Signal Flow Diagram	F 5-9
T	
10 kHz/1 kHz/100 Hz Synthesizer Subassembly (No. 1) A2A6A20:	
Adjustment and Alinement	T 6-6
Circuit Level Description	3-222
Fault Logic Diagram	F 5-29
Functional Description	3-88
Maintenance Schematic Diagram	F 5-45
Parts Location Illustration	F 7-75
Signal Flow Diagram	F 5-13
10 kHz/1 kHz/100 Hz Synthesizer Subassembly (No. 2) A2A6A19:	
Adjustment and Alinement	T 6-6
Circuit Level Description	3 216
Fault Logic Diagram	F 5-29
Functional Description	3-88
Maintenance Schematic Diagram	F 5-44
Parts Location Illustration	F 7-74
Signal Flow Diagram	F 5-13
10 MHz/1 MHz Filter Subassembly A2A6A14:	
Adjustment and Alinement	T 6-6
Circuit-Level Description	3-252
Functional Description	3-96
Maintenance Schematic Diagram	F 5-40
Parts Location Illustration	F 7-70

ALPHABETICAL INDEX

Subject	Paragraph, Figure, Table Number
10 MHz/1 MHz Synthesizer Subassembly A2A6A13:	
Adjustment and Alinement	T 6-6
Circuit Level Description	3-246
Fault Logic Diagram	F 5-31
Functional Description	3-84, 3-96, 97
Maintenance Schematic Diagram	F 5-39
Parts Location Illustration	F 7-79
Signal Flow Diagram	F 5-10
Tranlator/Synthesizer Assembly A2A6:	
Adjustment and Alinement	T 6-6
Check	T 4-13
Circuit Level Description	3-186
Maintenance Schematic Diagram	F 5-37
Parts Location Illustrations	F 7-66 thru F 7-75
Performance Test	T 4-13
Repair	6-96
Troubleshooting:	
Diagrams	5-16, F 5-1 thru F 5-46
Index	5-6, T 5-1
Maintenance Turn-on Procedure	5-12, T 5-5
Procedures	5-14
Tuning Code Chart	T 3-2
Tuning Control	3-108
Tuning Chain Drive Mechanism Description	3-119
Repair	6-37
Turn-on Procedures:	
Initial	8-33
Maintenance	5-12, T 5-5
Operator's	T 2-2
20- and 30-MHz Filter Assembly A2A10:	
Circuit-Level Discussion	3-133
Parts Location Illustration	F 7-78
Repair	6-10, 34
+20 V Regulation Check	3-128, T 4-10
+20 V Distribution	3-103, F 5-16

U

Unpacking and Replacing Equipment	8-9
Unscheduled Maintenance	T 4-10, T 4-12 thru T 4-16

W

Wire and Cable	6-16

Fold

DEPARTMENT OF THE NAVY
SPACE AND NAVAL WARFARE SYSTEMS COMMAND
WASHINGTON, D.C. 20363

OFFICIAL BUSINESS
PENALTY FOR PRIVATE USE, $300





POSTAGE AND FEES PAID
DEPARTMENT OF THE NAVY
DOD-316

COMMANDER
SPACE AND NAVAL WARFARE SYSTEMS COMMAND
TECHNICAL PUBLICATIONS OFFICE
ELEX 8122
WASHINGTON, D. C. 20363

Fold

NAVELEX 4160/1(2-81)

USER ACTIVITY TECHNICAL MANUAL COMMENT SHEET

(Use this comment sheet to provide for corrections and evaluating this publication.)

DATE:

*NAVELEX NO.	*VOLUME NO.	*TITLE NOMENCLATURE
EE125-AF-OMI-010/E110-R1051H		R-1051H/URR

(Fold on dotted line on reverse side, staple, and mail to Space and Naval Warfare Systems Command.)

USER EVALUATION

MANUAL IS: ☐ EXCELLENT ☐ GOOD ☐ FAIR ☐ POOR ☐ COMPLETE ☐ INCOMPLETE

RELATED REMARKS

☐ Problem ☐ Question ☐ Suggestion ☐ Comment (check on one)

RECOMMENDED CHANGE TO PUBLICATION

PAGE NO.	PARA-GRAPH	LINE NO.	FIGURE NO.	TABLE NO.	RECOMMENDED CHANGES AND REASONS

NAME

RANK, RATE, TITLE

MAILING ADDRESS

*To be filled in by Contractor before printing USE BLANK CONTINUATION SHEET AS REQUIRED.

Fold

DEPARTMENT OF THE NAVY
SPACE AND NAVAL WARFARE SYSTEMS COMMAND
WASHINGTON, D.C. 20363

OFFICIAL BUSINESS
PENALTY FOR PRIVATE USE, $300





POSTAGE AND FEES PAID
DEPARTMENT OF THE NAVY
DOD-316

COMMANDER
SPACE AND NAVAL WARFARE SYSTEMS COMMAND
TECHNICAL PUBLICATIONS OFFICE
ELEX 8122
WASHINGTON, D. C. 20363

Fold

NAVELEX 4160/1(2-81)

USER ACTIVITY TECHNICAL MANUAL COMMENT SHEET

(Use this comment sheet to provide for corrections and evaluating this publication.)

DATE: _____

*NAVELEX NO.	*VOLUME NO.	*TITLE NOMENCLATURE
EE125-AF-OMI-010/E110-R1051H		R-1051H/URR

(Fold on dotted line on reverse side, staple, and mail to Space and Naval Warfare Systems Command.)

USER EVALUATION

MANUAL IS: ☐ EXCELLENT ☐ GOOD ☐ FAIR ☐ POOR ☐ COMPLETE ☐ INCOMPLETE

RELATED REMARKS

☐ Problem ☐ Question ☐ Suggestion ☐ Comment (check on one)

RECOMMENDED CHANGE TO PUBLICATION

PAGE NO.	PARA-GRAPH	LINE NO.	FIGURE NO.	TABLE NO.	RECOMMENDED CHANGES AND REASONS

NAME

RANK, RATE, TITLE

MAILING ADDRESS

*To be filled in by Contractor before printing USE BLANK CONTINUATION SHEET AS REQUIRED.

Fold

DEPARTMENT OF THE NAVY
SPACE AND NAVAL WARFARE SYSTEMS COMMAND
WASHINGTON, D.C. 20363

OFFICIAL BUSINESS
PENALTY FOR PRIVATE USE, $300

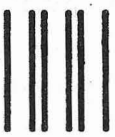



POSTAGE AND FEES PAID
DEPARTMENT OF THE NAVY
DOD-316

COMMANDER
SPACE AND NAVAL WARFARE SYSTEMS COMMAND
TECHNICAL PUBLICATIONS OFFICE
ELEX 8122
WASHINGTON, D. C. 20363

Fold