uptodate 12/82

NAVSHIPS 0967-970-9010
(Formerly 94841(A) Vol 1)

VOLUME I

TECHNICAL MANUAL
for

RADIO RECEIVER R-1051/URR

DEPARTMENT OF THE NAVY
BUREAU OF SHIPS

NAVSHIPS 0967-970-9010
(Formerly NAVSHIPS 94841(A))

VOLUME I

TECHNICAL MANUAL

for

RADIO RECEIVER R-1051/URR and R-1051B/URR

DEPARTMENT OF THE NAVY
NAVAL SHIP SYSTEMS COMMAND

Approved by BuShips:

Temporary Change 5: 15 July 1969

LIST OF EFFECTIVE PAGES

PAGE NUMBERS	CHANGE IN EFFECT	PAGE NUMBERS	CHANGE IN EFFECT	PAGE NUMBERS	CHANGE IN EFFECT
Title	T-Change 5	4-103 to 4-104	Change 1	5-40B	T-Change 2
ii	T-Change 5	4-104A to 4-104B	T-Change 2	5-41 to 5-48	Original
iii to iv	Change 1	4-105 to 4-106	Original	5-48A to 5-48B	T-Change 3
v	T-Change 3	4-107 to 4-112	T-Change 3	5-49 to 5-92	Original
vi	T-Change 4	4-113 to 4-114	Original	5-92A to 5-92B	T-Change 3
vii to ix	T-Change 3	4-114A to 4-114B	T-Change 3	5-93 to 5-94	Original
x	T-Change 5	4-115 to 4-116	Original	5-94A to 5-94B	T-Change 3
xA, xB	T-Change 5	4-116A to 4-116B	T-Change 2	5-95 to 5-106	Original
xi to xv	T-Change 3	4-117 to 4-118	Original	5-107	T-Change 3
1-0	Original	4-118A to 4-118B	T-Change 4	5-108 to 5-118	Original
1-1	T-Change 2	4-118C to 4-118D	T-Change 5	5-119 to 5-120	T-Change 3
1-2	Original	4-119 to 4-124	T-Change 3	5-121 to 5-138	Original
1-2A to 1-2B	T-Change 2	5-1	Original	5-138A to 5-138H	T-Change 3
1-3 to 1-4	Original	5-2	T-Change 4	5-139 to 5-140	Original
1-5	T-Change 5	5-2A to 5-2B	T-Change 2	5-140A to 5-140B	T-Change 2
1-6 to 1-10	Original	5-3 to 5-4	T-Change 2	5-141 to 5-144	Original
2-1 to 2-4	Original	5-4A to 5-4B	T-Change 2	5-145 to 5-146	Change 1
3-1 to 3-2	T-Change 2	5-5 to 5-10	Original	5-147 to 5-148	Original
4-1	Original	5-11 to 5-14	Change 1	5-148A to 5-148B	T-Change 2
4-2	T-Change 2	5-14A to 5-14D	T-Change 3	5-149 to 5-154	Original
4-2A to 4-2B	T-Change 2	5-15 to 5-16	T-Change 3	6-1 to 6-2	Original
4-3 to 4-4	Change 1	5-16A to 5-16B	T-Change 5	6-2A to 6-2C	Change 1
4-4A to 4-4B	T-Change 2	5-17 to 5-18	T-Change 3	6-2D	T-Change 4
4-5 to 4-7	Original	5-19 to 5-20	T-Change 4	6-2E to 6-2M	T-Change 3
4-8	T-Change 2	5-20A to 5-20B	T-Change 5	6-2N	T-Change 4
4-8A to 4-8B	T-Change 2	5-21 to 5-22	Change 1	6-2O	T-Change 3
4-9	Original	5-22A to 5-22B	T-Change 3	6-2P	T-Change 4
4-10	T-Change 2	5-23 to 5-24	T-Change 4	6-2Q to 6-2U	T-Change 3
4-11 to 4-58	Original	5-24A to 5-24B	T-Change 5	6-2V	T-Change 4
4-59	Change 1	5-25 to 5-26	T-Change 4	6-2W to 6-2X	T-Change 3
4-60 to 4-61	Original	5-26A to 5-26B	T-Change 5	6-2Y to 6-2BJ	T-Change 5
4-62	T-Change 3	5-27 to 5-28	T-Change 3	6-3 to 6-7	Original
4-62A to 4-62F	T-Change 3	5-29 to 5-30	Original	6-8	T-Change 4
4-63 to 4-74	Original	5-30A to 5-30B	T-Change 4	6-9 to 6-18	Original
4-75	Change 1	5-30C to 5-30D	T-Change 5	6-19	T-Change 4
4-76 to 4-79	Original	5-31 to 5-32	Change 1	6-20 to 6-37	Original
4-80	T-Change 2	5-32A to 5-32B	T-Change 4	6-38	T-Change 4
4-80A to 4-80B	T-Change 2	5-32C to 5-32D	T-Change 5	6-39 to 6-74	Original
4-81 to 4-90	Original	5-33 to 5-34	T-Change 3	6-75 to 6-76	T-Change 3
4-91 to 4-92	T-Change 3	5-35 to 5-36	Change 1	i-1 to i-2	Original
4-92A to 4-92I	T-Change 3	5-37 to 5-40	Original	i-3	Change 1
4-92J to 4-92L	T-Change 4	5-40A	T-Change 3	i-4 to i-7	Original
4-93 to 4-102	Original				

THE BENDIX CORPORATION E. JOPPA ROAD CONTRACT NO.
COMMUNICATIONS DIVISION BALTIMORE, MD. 21204 NObsr 93204 (FBM)

Errors found in this publication (other than obvious typographical errors), which have not been corrected by means of Temporary Corrections or Permanent Changes should be reported. Such report should include the complete title of the publication and the publication number (short title); identify the page and line or figure and location of the error; and be forwarded to the Electronics Publications Section of the Bureau of Ships.

All Navy requests for NAVSHIPS electronics publications listed in the current issue of NAVSANDA Publication 2002 "Requisitioning Guide and Index of Forms and Publications", Cognizance Symbol I, or in a subsequent issue of the Electronics Information Bulletin should be directed to the appropriate forms and Publications Supply Point.

PERMANENT CHANGE NUMBER 2
NAVSHIPS 0967-970-9011
To
TECHNICAL MANUALS
for
RADIO RECEIVER R-1051/URR
NAVSHIPS 0967-970-9010
(Formerly NAVSHIPS 94841 (A), Volume I)

1-1 GENERAL

a. This change package consists of the following pages: Instruction pages 1 thru 4 NAVSHIPS 0967-970-9010 pages - Title; ii; ix; x; 5-11, 5-12; 5-13, 5-14; 5-17, 5-18; 5-21, 5-22; 5-25, 5-26; 5-27, 5-28; 5-29, 5-30; 5-31, 5-32; 5-39; 5-40; 5-41; 5-42; 5-43; 5-44; 5-48a; 5-49; 5-50; 5-51; 5-52; 5-57; 5-58; 5-79; 5-80; 5-80a; 5-81; 5-82; 5-89; 5-90; 5-95; 5-96; 5-99, 5-100; 5-103, 5-104; 5-111, 5-112; 5-117; 5-118; 5-121, 5-122; 5-123, 5-124; 5-139, 5-140; 5-149, 5-150; 6-1 thru 6-80.

b. This change is in effect upon receipt and supersedes the basic publication for the pages affected.

c. The purpose of this change is to bring the basic publication up to date with equipment design changes. This change applies to all manuals and equipment in service.

2-1 INSTRUCTIONS

a. Starting at the rear of the book, discard pages 6-1 through 6-76 and insert new pages 6-1 through 6-80.

b. Working towards the front of the book, remove superseded pages and replace them with the change pages. Insert 'a' pages following pages of a similar number (page 5-80a follows page 5-80, etc.).

c. Before securing the front cover, ensure that all change pages are in place and that no superseded pages remain in the book.

d. Destroy superseded pages by tearing them and disposing of them in any convenient manner.

e. Proceed with the pen-and-ink change corrections outlined below. When all corrections have been written into the book, insert this change notice in the front of the book for a permanent record.

3-1 PEN-AND-INK CORRECTIONS

a. The purpose of pen-and-ink corrections is to avoid the unnecessary handling of additional pages that have minor changes and/or corrections. Mark each page according to the instructions given. All page, paragraph, line, figure, and table numbers specified in the instructions refer to those of the original or existing pages in the book and not those just inserted. After correcting a page change the word ORIGINAL or CHANGE 1 at the bottom of the page to read CHANGE 2.

b. Add the following CAUTION notice to each servicing block diagram of Section 4 and to each schematic diagram of Section 5 containing transistorized circuits:

CAUTION

When making resistance checks at semi-conductor devices, use only the higher scales of the multimeter so as to avoid unintentional damage to the semi-conductor device due to the meters internal voltage.

c. Where necessary, on servicing block diagrams of Section 4 and schematic diagrams of Section 5, indicate that printed circuit board terminals (E1, E2, etc.) are not electrically connected by the broken lines outlining the physical dimensions of the board. This may be done by using yellow or white lead pencil to delete portions of the lines adjacent to the terminals.

d. Wherever it appears, change NAVSHIPS 95700 to read NAVSHIPS 0967-034-2000.

Page 4-42, Figure 4-19

Add: R23 in main signal line between A4R22 and A5C2.

Delete: A4C3 from right end of A4R3 and draw in similar location at left end of A4R3.

Page 4-57, Figure 4-27

Change: A2A5Q4 to read A2A5Q1

Page 4-93, Figure 4-58

Add: A2C3 (0.1 uf, 200 V) between base and collector of A2Q1 Series Regulator, and add reference to Note 2.

Number existing Note 1, and add Note 2: A2C3 not used on earlier models

Page 4-105, Figure 4-52

Delete: Type number for A38Q2 and add reference to Note 6.

Add: Note 6: A38Q2 is SM2437 or GM1151 in current models. Earlier models used 2N1142. Replace with type originally installed in equipment being repaired.

Page 4-111, Figure 4-55

At transformer T1, interchange numbers of terminals 7 and 8.

Change: In Note 4, P4-17 to read P1-17 (two places).

Delete: Type number from A1Q4 and add reference to Note 9.

Add: Note 9: A1Q4 in current models 2N706/SM5584. Earlier models use 2N706. Replace with type originally installed in equipment being repaired.

Page 4-113, Figure 4-56

Change: At lower center of drawing, reference designation of DC amplifier, Q4, 2N1117A to read DC Amplifier, Q1, 2N1117A.

Delete: At upper left of drawing, type number of Limiter A1CR1 and add reference to Note 6.

Add: Note 6: A1CR1 in current models IN3063. Earlier models use IN816. Replacement parts should be IN3063.

Page 4-115, Figure 4-57

Delete: Type number of A1Q6 and add reference to Note 5.

Add: Note 5: A1Q6 in current models 2N3127. Earlier models use 2N700. Replace with type originally installed in equipment being repaired.

Page 4-119, Figure 4-59

Delete: Transistor type number and add reference to Note 4 at following places: A4Z2Q7, A4Z1Q10, A4Z3Q6, and A4Q9.

Add: Note 4: Current models use 2N3127. Earlier models use 2N700. Replace with type originally installed in equipment being repaired.

Delete: Transistor type number at A4Q8 and add reference to Note 5.

Add: Note 5: Current models use 2N3127. Earliest models use 2N700, unmarked but selected for low gain. Later models use 2N700 marked with blue dot. Still later models use SM2059. Replace with type originally installed in equipment being repaired.

Page 4-121, Figure 4-60

Delete: Transistor type number and add reference to Note 4 at following places: A2Q1, A2Q2, A3Q2, A4Q1, A4Q2, A4Q3, A4Q4, and A5Q1.

Add: Note 4: Current models use 2N3127. Earlier models use 2N700. Replace with type originally installed in equipment being repaired.

Delete: Transistor type number, and add reference to Note 5, at A1Q1 and A1Q2.

Add: Note 5: Current models use 2N2222. Earlier models use 2N2501. Replace with type originally installed in equipment being repaired.

Page 4-123, Figure 4-61

Delete: Transistor type number of A3Q5 and add reference to Note 5.

Add: Note 5: A3Q5 in current models 2N3127. Earlier models use 2N700. Replace with type originally installed in equipment being repaired.

Page 5-15, Figure 5-2

Delete: Value of A3R1 and add reference to Note 13.

Add: Note 13: A3R1 is 560 K ohms in current models. Earlier models used 750 K ohms. Replace with value originally installed in equipment being repaired.

Page 5-19 , Figure 5-4

Add: Reference to Note 14 at C5 (location 7C).

Delete: Transistor type number of A38Q2 (location 7B) and add reference to Note 15.

Add: Note 15: A38Q2 to be Motorola SM2437 or Texas Instrument GM1151 in current models. Earlier models use 2N1142. Replace with type originally installed in equipment being repaired.

Page 5-23, Figure 5-6

Delete: Transistor type number at A3Q5 and add reference to Note 6.

Add: Note 6: A3Q5 in current models 2N3127. Earlier models use 2N700. Replace with type originally installed in equipment being repaired.

Page 5-33, Figure 5-11

Delete: Value of R38 (location 6B) and add reference to Note 5.

Change: In Note 5, value of R38 from 5 and 47 ohms to read 0 and 47 ohms.

Delete: Value of R8 (location 15E) and add reference to Note 6.

Add: Note 6: R8 selected at time of assembly between values of 10 and 22 ohms.

Page 5-45, Figure 5-19

Delete: Outlines of C1 (location 7B) and C2 (location 7A). Delete both from Part Location Index.

Page 5-48, Figure 5-21

Add: Note 1: This figure shows foil pattern used on earlier models. For foil pattern used on current models, see figure 5-21a.

Page 5-61, Figure 5-32

Change: At bottom of figure, reference designation S1 to read MP1.

Page 5-62, Figure 5-33

Delete: Reference designation S1 at bottom of figure.

Page 5-107, Figure 5-73

Change: Reference designation E206 to MP5 at bottom of figure.
Write designation MP6 next to MP5 and draw line to touch mechanical coupling (lowest portion of photograph).

Page 5-127, Figure 5-87

Delete: Reference designations A3J6 and A3J3 and their leader lines.

Page 5-129, Figure 5-90

Add: Reference designation MP1 near connector P1-A1 and draw line to touch connector.

Add: Reference designation MP2 near connector P1-A2 and draw line to touch connector.

Page 5-133, Figure 5-92

Add: Reference designation MP1 near connector P1-A3 and draw line to touch connector.

Page 5-151, Figure 5-101

Write reference designation near each of the following connectors and draw line to touch connectors as follows: MP1 to P3A2; MP2 to P3A1; MP3 to P3A3; MP4 to P2A2; MP5 to P2A1.

NAVSHIPS 94841(A)
P-1

PERMANENT CHANGE NUMBER 1
TO NAVSHIPS 94841(A) (VOL I AND VOL II)
INSTRUCTION SHEET

1. GENERAL.

1.1 This change is in effect upon receipt and supersedes the basic publication for the pages affected.

1.2 The purpose of this change is to bring the basic publication up to date with equipment production changes. This change applies to all manuals and equipment in service.

2. INSTRUCTIONS.

2.1 Starting at the rear of the book, insert the Supplementary Parts List in front of page 6-3.

2.2 Working toward the front of the book, remove superseded pages and replace them with the change pages.

2.3 Before securing the front cover, make sure that all change pages are in place and that no superseded pages remain in the book.

2.4 Destroy superseded pages by tearing them and disposing of them in any convenient manner.

2.5 When the manual has been completely re-assembled, proceed with the pen-and-ink corrections as outlined below.

3. PEN-AND-INK CORRECTIONS.

3.2 The purpose of making pen-and-ink corrections is to avoid the unnecessary handling of additional pages that have minor changes or corrections. Mark each page according to the instructions given. All page, paragraph, line, figure, and table numbers specified in the instructions, unless otherwise specified, refer to those of the original or existing pages in the book and not those just inserted. After marking a page, change the word "ORIGINAL" at the bottom of the page to "CHANGE 1".

Page 1-2, Figure 1-2:
Change call-out for "IF./AUDIO AMPLIFIER A2A2" and "IF./AUDIO AMPLIFIER A2A3" to: "RECEIVER IF./AUDIO AMPLIFIER A2A2" and "RECEIVER IF./AUDIO AMPLIFIER A2A3".

Page 1-4, Paragraph 1-15, Step f, Line 3:
Delete "compatible" from line.

Page 1-4, Paragraph 1-15, Step o, Line 3:
Change "...600-ohms" to: "...1200-ohms".

Page 1-5, Table 1-3:
Delete "(Continued)" from table title.

Page 1-8, Table 1-4:
Add NAVSHIPS numbers in NOMENCLATURE DESIGNATION column for test data booklets listed in NOMENCLATURE NAME column, as follows:

TS-2132/WRC-1:	"NAVSHIPS 0967 004 2000"
TS-2133/WRC-1:	"NAVSHIPS 0967 004 3000"
TS-2134/WRC-1:	"NAVSHIPS 0967 004 4000"
TS-2135/WRC-1:	"NAVSHIPS 0967 004 5000"

Page 4-9, Figure 4-2:
Under LO 500 CPS column, opposite 7 in the MCS column, change "22.9000" to: "22.9005".

PERMANENT CHANGE NUMBER 1
TO NAVSHIPS 94841(A) (VOL I AND VOL II)
INSTRUCTION SHEET (Cont)

Page 4-11, 4-12; Figure 4-4:
"Transformers T1, T2, and T3" in MEGACYCLE ASSEMBLY blocks: Draw an arrow through both windings of each transformer to indicate that they are variable transformers.

Page 4-14, Figure 4-5:
Draw an arrow through both windings of transformer T4 in the MEGACYCLE ASSEMBLY block to indicate that the transformer is variable.

Page 4-17, Paragraph 4-67, Step e(2):
Change designation of test set from "TS-2134/WRC-1" to: "TS-2133/WRC-1".

Page 4-18, Paragraph 4-72, Step e(2):
Change designation of test set from "TS-2134/WRC-1" to: "TS-2133/WRC-1".

Page 4-19, Paragraph 4-77, Step e(2):
Change designation of test set from "TS-2134/WRC-1" to: "TS-2133/WRC-1".

Page 4-26, Figure 4-12:
Change reference designation of I. F. AMPLIFIER from "A303" to: "A3Q3".

Page 4-31, 4-32; Figure 4-15:
Emitter Follower Q4: Connect resistor R31 between collector of Q4 and +20 vdc.
Add note: "R31 added or unit ser. no. 550 and above".

Page 4-33, Paragraph 4-138, Line 10:
Delete "directly".

Page 4-39, Paragraph 4-148, Step d(6):
Change designation of test set from "TS-21351 WRC-1" to: "TS-2135/WRC-1".

Page 4-56, Figure 4-26:
Transformer A2A5A3T2: Connect ground to bottom of T2 primary winding (side that connects to A2A5A3Q5).
Transformer A2A5A2T3: Delete arrow through transformer to indicate that the transformer is fixed.

Page 4-58, Figure 4-28:
Connect +20 vdc through resistor R31 to contact 7 of switch A2A5S1.
Add note: "R31 added on unit ser. no. 104 and above".

Page 4-67, Figure 4-34:
Delete input information to capacitor C4 (at left) and replace with: "OUTPUT FROM EMITTER FOLLOWER A2A6A2A5Q1".

Page 4-71, Figure 4-36:
TP2: Delete "HI-BAND/" and "/A5" from output information at right.
TP4: Delete "/LO-BAND" and "/A5" from output information at right.
R6: Delete "/A5" from output information at right.

Page 4-73, Figure 4-37:
Transistor Q3: Connect resistor R30 between emitter of Q3 and junction of capacitor C9 and resistor R18.

Page 4-81, Figure 4-43:
CPS SWITCH A2S6 (right side of schematic): Add "FRONT" next to switch wafer.
CPS SWITCH A2S6 (left side of schematic): From top to bottom, label wafers "FRONT", "REAR", and "FRONT", respectively.

PERMANENT CHANGE NUMBER 1
TO NAVSHIPS 94841(A) (VOL I AND VOL II)
INSTRUCTION SHEET (Cont)

Page 4-87, Figure 4-46:
Capacitor C23 (lower right of schematic). Reverse polarity markings; "(+)" to: "(-)", and "(-)" to: "(+)".

Page 4-95, Paragraph 4-333:
Line 13: Change "anode" to: "cathode' .
Line 14: Change "cathode" to: "anode".

Page 4-96, Figure 4-49:
Change figure number from "4-49" to: "4-50".
Change figure title from "Power Supply..." to: "Tuning...".

Page 4-97, Table 4-2:
MCS AND 100KCS CONTROLS column: Change title of column to: "MCS CONTROLS".

Page 4-105, Figure 4-52:
P2-9 to RF AMPLIFIER V1: Connect resistor R2 in series between test point Ⓢ and input to V1. Then connect resistor R1 from bottom of R2 to ground.
Test Point Ⓢ: Change "OTC-30VDC" to: "0 TO 30VDC".
Transformers T1, T2, T3, and T4: Draw an arrow through these transformers to indicate that they are variable transformers.

Page 4-107, Figure 4-53:
Test Point Ⓚ (at Q9): Delete "AT 120MV" and "AT 125MV" and replace with: "100-140MV RMS".

Page 4-109, Figure 4-54:
Test Point Ⓔ: Change "205 MV" to: "140 MV RMS".

Page 4-113, Figure 4-56:
Switch A1S1: Add arrowhead to line at contact 9 of switch.
Transformer A2T3: Draw an arrow through transformer to indicate that it is a fixed transformer.
1MC OUTPUT (right side of schematic): Change signal level from "12.5V RMS NOMINAL OUTPUT" to: "350-550MV RMS".
10MC OUTPUT (right side of schematic): Change signal level from "80MV RMS NOMINAL OUTPUT" to: "70MV RMS MINIMUM".

Page 4-115, 4-116; Figure 4-57:
Connector A4J1 (5KC SPECTRUM OUTPUT): Change "(0.110 TO 0.115 MC)" in output information to: "(0.110 AND 0.115 MC)".

Page 4-117, Figure 4-58:

TP 23 : Change signal level from "12MV" to: "6-100MV".

A1TP5: Add note: "A1TP5 deleted on unit ser. no. 186 and above, and TP 23 connects to terminal A1E8".

Page 4-119, 4-120; Figure 4-59:
Mixer A4Q9: Change transistor type from "2N700" to: "2N3127".
Isolation Amplifier A4Z3Q6: Change transistor type from "2N700" to: "2N700/SM2059".

Page 4-121, 4-122; Figure 4-60:
Emitter Follower A1Q1: Change reference designation from "Q1" to: "Q2".

TP 14. Delete "AT 120MV" and "AT 125MV" to: "100-140MV RMS".

TP 24. Change signal level from "90MV" to: "6-100MV RMS".

PERMANENT CHANGE NUMBER 1
TO NAVSHIPS 94841(A) (VOL I AND VOL II)
INSTRUCTION SHEET (Cont)

Page 4-123, 4-124; Figure 4-61:

P1-A2: Delete "1" from "1MC OUTPUT...". Then add "80MV RMS" to this information.

TP (AN): Delete waveform and associated voltage levels and replace with: "5-17VDC".

MC OSCILLATOR AGC (A2) assembly: Change nomenclature from "MC OSCILLATOR AGC (A2)" to: "ERROR DETECTOR/AMPLIFIER (A2)".

Page 5-15, Figure 5-2; Note 8:

Note 8: Change to read: "CAPACITANCE TO BE SELECTED ACCORDING TO COLOR CODE DOT ON FILTERS":

Orange: 130PF ± 2%
Yellow: 142PF ± 2%
Green: 150PF ± 2%

Note 12: Change table number to 5-1.

Page 5-17, Figure 5-3:

A2C10 (location 9B): Change value from "0.05" to:"0.05UF".

A1Q4 (location 11F): Connect resistor R31, 4.7K, between collector of A1Q4 and +20V(A).

A1Q6 (location 10F): Change voltage at base of A1Q6 from "0.27V" to: "2.7V".

Note 12: Change table number to 5-1.

Transformer T1 (location 19B, C): Add note: "Terminal No. 7 and 8 reversed on unit ser. no. 3 and above".

Add note 14: "A1R31 added on unit ser. no. 550 and above".

Page 5-23, 5-24; Figure 5-6:

S1, Section 1-Front: Make contact 6 a long clip

P1-A2 Output information (location 13B): Change "1MC OUTPUT..." to: "MC OUTPUT...".

MC OSCILLATOR AGE(A2): Change nomenclature from "MC OSCILLATOR AGC(A2)" to: "ERROR DETECTOR/AMPLIFIER(A2)".

Resistor A2R7 (location 18F): Connect top of A2R7 to +20VDC at top of resistor A2R9 (location 19F).

Page 5-25, 5-26; Figure 5-7:

Resistor A1R1 (location 8B): Change reference designation from "R1" to: "R13".

Add note 6: "Values for A1R8, new A1R13 and A1R14 change on unit ser. no. 395 and above, as follows:

A1R8: 5.1
New A1R13: 560
A1R14: 430

10.747 MIXER AGC(A5) assembly: Change nomenclature from "10.747 MIXER AGC" to: "EMITTER FOLLOWER/10.747 MIXER AGC(A5)".

A3T2 (location 15H): Fill in reference designation "(C9)" and value "(10)" for capacitor connected across primary winding of A3T2.

Page 5-27, 5-28; Figure 5-8:

Add note 7: "Value of A1R7 changes to 5.1 and A1R15 to 820 on unit ser. no. 330 and above".

A4Q9 (location 19G): Change transistor type from "2N700" to: "2N3127".

A4Q8 (location 17H): Change transistor type from "2N700" to: "2N700/SM2059".

Page 5-29, 5-30; Figure 5-9:

A3P1 (location 4D): Ground shield of A3P1 and delete terminals A3E10 and A3E9 and shield connected around A3P1 to terminal A3E9.

A3J1 (location 4C): Draw shield around lead to A3J1 and connect to terminal A3E12.

A1L1 (location 12F): Change value from "1UH" to: "1MH".

A1TP5 (location 12H): Add note: "A1TP5 deleted on unit ser. no. 186 and above".

A2C23 (location 23E): Reverse polarity markings; "+" to: "(-)", and "(-)" to: "(+)".

Note 5: Change "...10PF AND 36PF..." to: "...10PF AND 39PF...".

PERMANENT CHANGE NUMBER 1
TO NAVSHIPS 94841(A) (VOL I AND VOL II)
INSTRUCTION SHEET (Cont)

Page 5-33, 5-34; Figure 5-11:
A1J5 (location 3C): Change "J5" to: "J7".
A1J5 (location 3C): Change "20V(GRY)" to: "20V(ORN)".
A1J7 (location 18B): Change "J7" to: "J5".
A1J7 (location 18B): Change "GRD(ORN)" at output to: "GRD(GRY)".
A1C3 (location 16B): Change input to A1C3 from "GRD(ORN)" to: "GRD".
A1J1 (location 3F) and P3-A3 (location 19H): Delete "1" from "1MC INJECTION...".
Notes: Add note 5 as follows:
"5. ON ELECTRONIC ASSEMBLY SER. NO'S 226 AND ABOVE, R38 SELECTED AT THE TIME OF ASSEMBLY BETWEEN VALUES OF 5 AND 47 OHMS".

Page 5-54; Figure 5-27:
Change "T6" to:"T1".

Page 5-55, 5-56; Figure 5-28:
Connect resistor R31 between bottom of resistor R11 (location 5C) and top of resistor R18 (location 6D).
Add note: "R31 added on unit ser. no. 550 and above".

Page 5-91, 5-92; Figure 5-62:
Connect resistor R31 between terminals E5 (location 4E) and E14 (location 5E).
Add note: "R31 added on unit ser. no. 104 and above".

Page 5-129, 5-130; Figure 5-90:
Add note: "TP5 deleted on unit ser. no. 186 and above, and TP 23 connects to terminal E8".

Page 5-133, 5-134; Figure 5-92:
Delete terminals E9 (location 5B) and E10 (location 6C).

Page 5-143, 5-144, Figure 5-97:
Connect resistor R30 between the emitter of transistor Q3 (location 2F) and junction of capacitor C9 and resistor R18 (location 4F).

LIST OF EFFECTIVE PAGES (Cont)

PAGE NUMBERS	CHANGE IN EFFECT	PAGE NUMBERS	CHANGE IN EFFECT
5-113 to 5-116	Original	5-135 to 5-138	Original
5-117	Change 2	5-139 to 5-140	Change 2
5-118 to 5-120	Original	5-141 to 5-142	Original
5-121 to 5-124	Change 2	5-143 to 5-146	Change 1
5-125 to 5-126	Original	5-147 to 5-148	Original
5-127	Change 2	5-149 to 5-152	Change 2
5-128	Original	5-153 to 5-154	Original
5-129 to 5-130	Change 2		
5-131 to 5-132	Original		
5-133 to 5-134	Change 2	6-1 to	Change 2

GENERAL DYNAMICS
Electronics Division

1400 N. GOODMAN ST.
ROCHESTER, N.Y.

CONTRACT NO.
NObsr 87614
NObsr 89368 (FBM)

Errors found in this publication (other than obvious typographical errors), which have not been corrected by means of Temporary Corrections or Permanent Changes should be reported. Such report should include the complete title of the publication and the publication number (short title); identify the page and line or figure and location of the error; and be forwarded to the Electronics Publications Section of the Bureau of Ships.

All Navy requests for NAVSHIPS electronics publications listed in the current issue of NAVSANDA Publication 2002 "Requisitioning Guide and Index of Forms and Publications", Cognizance Symbol I, or in a subsequent issue of the Electronics Information Bulletin should be directed to the appropriate Forms and Publications Supply Point.

TABLE OF CONTENTS

Paragraph		Page
	SECTION 1 - GENERAL INFORMATION	
1-1.	Scope	1-1
1-4.	General Description	1-1
1-6.	Reference Designations	1-1
1-8.	Function	1-1
1-10.	Physical Characteristics	1-1
1-12.	Electrical Characteristics	1-2
1-14.	Reference Data	1-4
1-16.	Crystal Complement	1-4
1-18.	Equipment Supplied	1-4
1-20.	Equipment and Publications Required but Not Supplied	1-4
1-22.	Extender Test Cable Data	1-4
1-24.	Preparation for Reshipment	1-4
	SECTION 2 - INSTALLATION	
2-1.	Unpacking and Handling	2-1
2-3.	Power Requirements	2-1
2-5.	Site Selection	2-1
2-8.	Installation Requirements	2-1
2-9.	Considerations	2-1
2-11.	Installation	2-1
2-14.	Interconnection	2-1
2-25.	Inspection and Adjustment	2-7
2-26.	Inspection	2-7
2-27.	Adjustment	2-7
2-28.	Performance Checks	2-8
2-29.	Interference Reduction	2-8
	SECTION 3 - OPERATION See Volume II - Operator's Handbook	
3-1.	Functional Description	3-1
3-2.	General	3-1
3-4.	Operation	3-1
3-8.	Operating Procedures	3-1
3-10.	Description of Controls and Indicators	3-1
3-12.	Sequence of Operation	3-1
3-14.	Shutdown	3-5
3-16.	Operator's Maintenance	3-5
3-17.	Operating Checks and Adjustments	3-5
3-19.	Preventive Maintenance	3-5
3-21.	Emergency Maintenance	3-5
	SECTION 4 - TROUBLE SHOOTING	
4-1.	Logical Trouble Shooting	4-1
4-3.	Symptom Recognition	4-1
4-5.	Symptom Elaboration	4-1
4-7.	Listing Probable Faulty Function	4-1
4-9.	Localizing the Faulty Function	4-1
4-11.	Localizing Trouble to the Circuit	4-1
4-13.	Failure Analysis	4-2
4-15.	Radio Receiver R-1051/URR, Functional Description	4-2
4-17.	Main Signal Flow	4-2
4-24.	Step AGC Signal Flow	4-5
4-26.	Frequency Standard	4-5
4-28.	Frequency Generation	4-6
4-32.	Error Cancellation	4-6
4-38.	Power Supplies	4-8
4-40.	Radio Receiver R-1051/URR, Test Data	4-8
4-42.	Radio Receiver R-1051/URR, Circuit Descriptions	4-10
4-43.	Antenna Overload Functional Circuit Description	4-10
4-46.	Antenna Overload, Test Data	4-10
4-48.	RF Amplifier V1, Functional Circuit Description	4-10
4-55.	RF Amplifier V1, Test Data	4-13
4-57.	RF Amplifier V2, Functional Circuit Description	4-13
4-61.	RF Amplifier V2, Test Data	4-15
4-63.	High Frequency Mixer, Functional Circuit Description	4-15
4-66.	High Frequency Mixer, Test Data	4-16
4-68.	Mid Frequency Mixer, Functional Circuit Description	4-17
4-71.	Mid Frequency Mixer, Test Data	4-18
4-73.	Low Frequency Mixer, Functional Circuit Description	4-18
4-76.	Low Frequency Mixer, Test Data	4-18
4-78.	LSB Filter, Functional Circuit Description	4-19
4-80.	LSB Operation	4-19

TABLE OF CONTENTS (Cont)

Paragraph		Page
SECTION 4 - TROUBLE SHOOTING (Cont)		
4-81.	ISB Operation	4-20
4-82.	LSB Filter, Test Data	4-20
4-84.	USB Mode Gate and Filter, Functional Circuit Description	4-21
4-86.	USB Operation	4-21
4-87.	ISB Operation	4-21
4-88.	FSK Operation	4-21
4-89.	USB Mode Gate and Filter, Test Data	4-21
4-91.	AM Mode Gate and Filter, Functional Circuit Description	4-21 4-22
4-93.	AM Operation	4-22
4-94.	CW Operation	4-22
4-95.	AM Mode Gate and Filter, Test Data	4-22
4-97.	Gain-Controlled IF. Amplifier, Functional Circuit Description	4-22
4-104.	Gain-Controlled IF. Amplifier, Test Data	4-24
4-106.	Product Detector, Functional Circuit Description	4-25
4-110.	Product Detector, Test Data	4-26
4-112.	AM Detector, Functional Circuit Description	4-26
4-116.	AM Detector, Test Data	4-27
4-118.	Audio Amplifier, Functional Circuit Description	4-27
4-123.	Audio Amplifier, Test Data	4-29
4-125.	500 KC Gate, Functional Circuit Description	4-29
4-127.	LSB, FSK, USB and ISB Operation	4-29
4-128.	AM and CW Operation	4-29
4-129.	500 KC Gate, Test Data	4-30
4-131.	Step AGC, Functional Circuit Description	4-30
4-141.	Step AGC, Test Data	4-34
4-143.	BFO and Amplifier, Functional Circuit Description	4-34
4-147.	BFO and Amplifier, Test Data	4-34
4-149.	MC Oscillator, Functional Circuit Description	4-39
4-153.	MC Oscillator, Test Data	4-40
4-155.	4.553 to 5.453 MC Oscillator, Functional	4-40
	Circuit Description	4-40
4-159.	4.553 to 5.453 MC Oscillator, Test Data	4-41
4-161.	Hi-Band/Lo-Band Mixer/ Amplifier, Functional Circuit Description	4-41
4-166.	Hi-Band/Lo-Band Mixer/ Amplifier, Test Data	4-43
4-168.	5.16 to 5.25 MC Oscillator, Functional Circuit Description	4-44
4-172.	5.16 to 5.25 MC Oscillator, Test Data	4-45
4-174.	1.850 to 1.859 MC Oscillator, Functional Circuit Description	4-45
4-176.	1.850 to 1.859 MC Oscillator, Test Data	4-45
4-178.	1 and 10 KC Mixer, Functional Circuit Description	4-46
4-182.	1 and 10 KC Mixer, Test Data	4-49
4-184.	MC Spectrum Generator, Functional Circuit Description	4-49
4-187.	MC Spectrum Generator, Test Data	4-50
4-189.	MC Error Mixer, Functional Circuit Description	4-50
4-192.	MC Error Mixer, Test Data	4-53
4-194.	Error Detector/Amplifier, Functional Circuit Description	4-53
4-197.	Error Detector/Amplifier, Test Data	4-55
4-199.	5 MC Frequency Standard, Functional Circuit Description	4-55
4-203.	5 MC Oscillator, Test Data	4-56
4-205.	Oven Control, Functional Circuit Description	4-56
4-210.	Oven Control, Test Data	4-57
4-212.	Comparator, Functional Circuit Description	4-58
4-216.	Comparator, Test Data	4-59
4-218.	5 MC Divide-By-Five, Functional Circuit	

TABLE OF CONTENTS (Cont)

Paragraph		Page
SECTION 4 - TROUBLE SHOOTING (Cont)		
	Description	4-59
4-222.	5 MC Divide-by-Five, Test Data	4-60
4-224.	1 MC Divide-by-Two, Functional Circuit Description	4-61
4-227.	1 MC Divide-by-Two, Test Data	4-61
4-228A.	5 MC Frequency Standard Used in Receiver R-1051B/URR	4-62
4-228E.	5 MC Frequency Standard, Test Data	4-62A
4-228G.	Oven Control, Functional Circuit Description	4-62A
4-228L.	Oven Control Test Data	4-62B
4-228N.	Comparator, Functional Circuit Description	4-62B
4-228R.	Comparator, Test Data	4-62C
4-228T.	5 MC Multiply-by-Two, Functional Circuit Description	4-62D
4-228W.	5 MC Multiply-by-Two, Test Data	4-62D
4-228Y.	1 MC Locked Oscillator, Functional Description	4-62D
4-228AC.	1 MC Locked Oscillator	4-62D
4-228AE.	500 KC Locked Oscillator, Functional Description	4-62E
4-228AH.	500 KC Locked Oscillator, Test Data	4-62E
4-229.	100 KC Spectrum Generator, Functional Circuit Description	4-62E
4-236.	100 KC Spectrum Generator, Test Data	4-65
4-238.	10.747 MC Mixer, Functional Circuit Description	4-65
4-242.	10.747 MC Mixer, Test Data	4-66
4-244.	10.747 MC Mixer, AGC, Functional Circuit Description	4-67
4-249.	10.747 MC Mixer, AGC, Test Data	4-68
4-251.	5 MC Multiply-by-Two, Functional Circuit Description	4-68
4-254.	5 MC Multiply-by-Two, Test Data	4-68
4-256.	17.847/27.847 MC Mixer, Functional Circuit Description	4-69
4-263.	17.847/27.847 MC Mixer, Test Data	4-70
4-265.	10 KC Spectrum Generator, Functional Circuit Description	4-70
4-270.	10 KC Spectrum Generator, Test Data	4-74
4-272.	1 KC Spectrum Generator, Functional Circuit Description	4-74
4-275.	1 KC Spectrum Generator, Test Data	4-75
4-277.	1.981 MC Error Mixer, Functional Circuit Description	4-76
4-280.	1.981 MC Error Mixer, Test Data	4-76
4-282.	9.07 MC Error Mixer, Functional Circuit Description	4-77
4-284.	9.07 MC Error Mixer, Test Data	4-77
4-286.	7.089 MC Error Mixer, Functional Circuit Description	4-78
4-289.	7.089 MC Error Mixer, Test Data	4-78
4-291.	5 KC Spectrum Generator, Functional Circuit Description	4-79
4-294.	5 KC Spectrum Generator, Test Data	4-79
4-295A.	1 KC Pulse Inverter, Functional Circuit Description	4-80
4-295C.	1 KC Pulse Inverter, Test Data	4-80
4-296.	500 CPS Oscillator, Functional Circuit Description	4-80A
4-309.	500 KC Oscillator, Test Data	4-86
4-311.	Divide-by-Ten Multivibrators, Functional Circuit Description	4-86

TABLE OF CONTENTS (Cont)

Paragraph		Page
SECTION 4 - TROUBLE SHOOTING (Cont)		
4-318.	Divide-by-Ten Multivibrators, Test Data	4-88
4-320.	7.1 MC Mixer, Functional Circuit Description	4-89
4-327.	7.1 MC Mixer, Test Data.	4-91
4-328A.	100 CPS Oscillator, Functional Circuit Description	4-92
4-328K.	100 CPS Oscillator, Test Data	4-92B
4-328L.	Preset Counter, Functional Circuit Description	4-92B
4-328V.	Preset Counter, Test Data	4-92I
4-328W.	7.1 MC Mixer, Functional Circuit Description	4-92I
4-328AB.	7.1 MC Mixer, Test Data.	4-92J
4-328AC.	4 VDC Power Supply, Functional Circuit Description	4-92J
4-328AE.	4 VDC Power Supply and Vernier Control, Test Data	4-92J
4-328AF.	1 KC Spectrum Generator Inverter (A2A6A5A4) Functional Circuit Description (Used on R-1051B)	4-92J
4-329.	Power Supply, Functional Circuit Description	4-92K
4-334.	Power Supply, Test Data .	4-95
4-336.	Tuning, Functional Circuit Description	4-95
4-342.	Tuning, Test Data	4-98
4-344.	Control Switching, Functional Description	4-98
4-348.	Switching Functions for Mode Selector Switch S2	4-99
4-349.	LSB Position of Mode Selector Switch S2	4-99
4-350.	FSK Position of Mode Selector Switch S2.	4-100
4-351.	AM Position of Mode Selector Switch S2.	4-100
4-352.	CW Position of Mode Selector Switch S2.	4-101
4-353.	USB Position of Mode Selector Switch S2.	4-101
4-354.	ISB Position of Mode Selector Switch S2.	4-102
SECTION 5 - MAINTENANCE		
5-1.	Failure and Performance and Operational Reports	5-1
5-2.	Preventive Maintenance	5-1
5-3.	Tuning and Adjustment	5-1
5-4.	20-Volt Regulator Circuit Adjustment	5-1
5-5.	Test Equipment	5-1
5-6.	Control Settings	5-1
5-7.	Test Set-up	5-1
5-8.	Instructions	5-1
5-9.	5 MC Oscillator Circuit Adjustment	5-1
5-10.	Test Equipment	5-1
5-11.	Control Settings	5-1
5-12.	Test Set-up	5-1
5-13.	Instructions	5-2
5-13A.	Instructions	5-2
5-14.	500 CPS Oscillator Circuit Adjustment	5-2
5-15.	Test Equipment	5-2
5-16.	Control Settings	5-2
5-17.	Test Set-up	5-2
5-18.	Instructions	5-2
5-18A.	100 CPS Lock Adjustment	5-3
5-18C.	Test Equipment	5-3
5-18D.	Control Settings	5-3
5-18E.	Instructions	5-3
5-19.	BFO Circuit Adjustment	5-3
5-20.	Test Equipment	5-3
5-21.	Control Settings	5-3
5-22.	Test Set-up	5-4
5-23.	Instructions	5-4
5-24.	Receiver USB AGC Circuit Adjustment	5-4
5-25.	Test Equipment	5-4
5-26.	Control Settings	5-4
5-27.	Test Set-up	5-4
5-28.	Instructions	5-4
5-29.	Receiver LSB AGC Circuit Adjustment	5-4A
5-30.	Test Equipment	5-4A
5-31.	Control Settings	5-4A
5-32.	Test Set-up	5-4A
5-33.	Instructions	5-5
5-34.	Shipboard Repair	5-5

TABLE OF CONTENTS (Cont)

Paragraph		Page
	SECTION 5 - MAINTENANCE (Cont)	
5-35.	General Repair Instructions	5-5
5-37.	Non-Repairable Electronic Assemblies	5-5
5-38.	RF Amplifier Electronic Assembly A2A4	5-5
5-39.	Translator/Synthesizer Electronic Assembly A2A6	5-5
5-40.	Frequency Standard Electronic Assembly A2A5	5-6
5-41.	Repairable Electronic Assemblies	5-6
5-42.	Receiver IF./Audio Amplifier Electronic Assemblies	5-6
5-43.	Removal	5-6
5-44.	Test Equipment	5-6
5-45.	Repair	5-6
5-46.	Reassembly	5-6
5-47.	Adjustments	5-6
5-48.	Mode Selector Electronic Assembly A2A1	5-7
5-49.	Removal	5-7
5-50.	Test Equipment	5-7
5-51.	Repair	5-7
5-52.	Reassembly	5-7
5-53.	Adjustments	5-7
5-54.	Emergency Maintenance for Electronic Assemblies	5-7
5-58.	R-1051/URR Chain Drive Mechanism	5-8
5-59.	Removal	5-8
5-61.	Repair	5-8
5-63.	Reassembly	5-8
5-65.	Adjustments	5-8
5-67.	Drive Chain Adjustment	5-8
5-68.	Coupler Adjustment	5-9
5-69.	Depot Repair	5-9
	SECTION 6 - PARTS LIST	
6-1.	Introduction	6-1
6-2.	Reference Designation	6-1
6-4.	Ref Desig Prefix	6-1
6-6.	List of Units	6-1
6-8	Maintenance Parts List	6-1
6-11.	List of Manufacturers	6-2
6-13.	Stock Number Identification	6-2
6-15.	Notes	6-2
6-17.	Supplementary Parts List	6-2A
6-18.	Introduction	6-2A
6-20.	Supplementary Parts List for Radio Receiver R-1051B/URR	6-2E
6-21.	Introduction	6-2E
6-23.	Supplementary Parts List for Radio Receiver R-1051B/URR	6-2U
6-24.	Introduction	6-2U

LIST OF ILLUSTRATIONS

Figure Page

SECTION 1 - GENERAL INFORMATION

1-1. Radio Receiver R=1051/URR, Typical Relationship of Units 1-0
1-2. Radio Receiver R-1051/URR, Top View, Case Removed ... 1-2
1-2A. Radio Receiver R-1051B/URR, Top View, Case Removed ... 1-2A

SECTION 2 - INSTALLATION

2-1. Radio Receiver R=1051/URR, Dimensions 2-3
2-2. Radio Receiver R-1051/URR, Mounting Bracket for Rack Mounting 2-5
2-3. Radio Receiver R-1051/URR, Installation Diagram 2-6
2-4. Radio Receiver R-1051/URR, Rear View 2-6
2-5. Radio Receiver R-1051/URR, Typical Interconnection Diagram 2-7

SECTION 3 - OPERATION

3-1. Radio Receiver R-1051/URR, Operating Controls, Indicators, and Connectors 3-1

SECTION 4 - TROUBLE SHOOTING

4-1. Radio Receiver R-1051/URR, Functional Block Diagram ... 4-3
4-1A. Radio Receiver R-1051B/URR, Functional Block Diagram ... 4-4A
4-1B. Frequency Translation for the R-1051B/URR, Functional Block Diagram 4-8A
4-2. Frequency Translation Functional Block Diagram ... 4-9
4-3. Antenna Overload, Simplified Schematic Diagram 4-10
4-4. RF Amplifier V1, Simplified Schematic Diagram 4-11
4-5. RF Amplifier V2, Simplified Schematic Diagram 4-14
4-6. High Frequency Mixer, Simplified Schematic Diagram 4-16
4-7. Mid-Frequency Mixer, Simplified Schematic Diagram 4-17

Figure Page

SECTION 4 - TROUBLE SHOOTING (Cont)

4-8. Low Frequency Mixer, Simplified Schematic Diagram 4-19
4-9. Mode Gates and Filters, Simplified Schematic Diagram 4-20
4-10. Gain Controlled IF. Amplifier, Simplified Schematic Diagram. 4-23
4-11. Product Detector, Simplified Schematic Diagram 4-25
4-12. AM Detector, Simplified Schematic Diagram 4-26
4-13. Audio Amplifier, Simplified Schematic Diagram 4-28
4-14. 500 KC Gate, Simplified Schematic Diagram 4-29
4-15. Step AGC, Simplified Schematic Diagram 4-31
4-16. BFO and Amplifier, Simplified Schematic Diagram 4-35
4-17. MC Oscillator, Simplified Schematic Diagram 4-37
4-18. 4.553 to 5.453 MC Oscillator Simplified Schematic Diagram. 4-40
4-19. Hi-Band/Lo-Band Mixer Amplifier, Simplified Schematic Diagram 4-42
4-20. 5.16 to 5.25 MC Oscillator, Simplified Schematic Diagram. 4-44
4-21. 1.850 to 1.859 MC Oscillator, Simplified Schematic Diagram. 4-46
4-22. 1 and 10 KC Mixer, Simplified Schematic Diagram 4-47
4-23. MC Spectrum Generator, Simplified Schematic Diagram. 4-51
4-24. MC Error Mixer, Simplified Schematic Diagram 4-53
4-25. Error Detector/Amplifier, Simplified Schematic Diagram. 4-54
4-26. 5 MC Frequency Standard, Simplified Schematic Diagram. 4-56
4-27. Oven Control, Simplified Schematic Diagram 4-57
4-28. Comparator, Simplified Schematic Diagram 4-58
4-29. 5 MC Divide-By-Five Simplified Schematic Diagram 4-60
4-30. 1 MC Divide-By-Two, Simplified Schematic Diagram 4-61
4-30A. 5MC Frequency Standard, Simplified Schematic Diagram (Used on R-1051B/URR) 4-62

LIST OF ILLUSTRATIONS (Cont)

Figure		Page
	SECTION 4 - TROUBLE SHOOTING (Cont)	
4-30B.	Over Control, Simplified Schematic Diagram (Used on R-1051B/URR)	4-62A
4-30C.	Comparator, Simplified Schematic Diagram (Used on R-1051B/URR)	4-62C
4-31.	100 IC Spectrum Generator, Simplified Schematic Diagram	4-63
4-32.	Divide-By-Five Multivibrator, Timing Diagram	4-64
4-33.	10.747 MC Mixer, Simplified Schematic Diagram	4-66
4-34.	10.747 MC Mixer, AGC, Simplified Schematic Diagram	4-67
4-35.	5 MC Multiply-By-Two, Simplified Schematic Diagram	4-69
4-36.	17.847/27.847 MC Mixer, Simplified Schematic Diagram	4-71
4-37.	10 KC Spectrum Generator, Simplified Schematic Diagram	4-73
4-38.	1 KC Spectrum Generator, Simplified Schematic Diagram	4-75
4-39.	1.981 MC Error Mixer, Simplified Schematic Diagram	4-76
4-40.	9.07 MC Error Mixer, Simplified Schematic Diagram	4-77
4-41.	7.089 MC Mixer, Simplified Schematic Diagram	4-78
4-42.	5 KC Spectrum Generator, Simplified Schematic Diagram	4-79
4-42A.	1 KC Pulse Inverter, Simplified Schematic Diagram	4-80
4-43.	500 CPS Oscillator, Simplified Schematic Diagram	4-81
4-44.	500 CPS Oscillator, AC Equivalent Circuit, Schematic Diagram	4-83
4-45.	Phase Detector, Vector Diagram	4-85
4-46.	Divide-By-Ten Multivibrators, Simplified Schematic Diagram	4-87
4-47.	Divide-By-Ten Multivibrators, Timing Diagram	4-88
4-48.	7.1 MC Mixer, Simplified Schematic Diagram	4-90
4-48A.	100 CPS Oscillator, Simplified Schematic Diagram	4-92A
4-48B.	100 CPS Oscillator, AC Equivalent Circuit, Schematic Diagram	4-92B
4-48C.	Phase Detector (Integrated Circuit IC1) Simplified Shematic Diagram and Truth Table	4-92C
4-48D.	Phase Detector, Waveforms	4-92D
4-48E.	Preset Counter, Simplified Schematic Diagram	4-92F
4-48F.	Decade Counter (IC1, IC2, and IC3), Simplified Block Diagram and Truth Table	4-92G
4-48G.	Decade Counter Coding Scheme	4-92H
4-48H.	7.1 MC Mixer, Simplified Schematic Diagram	4-92K
4-49.	Tuning, Simplified Schematic Diagram	4-93
4-50.	Radio Receiver R-1051/URR, Tuning, Simplified Schematic Diagram	4-96
4-51.	Radio Receiver R-1051/URR, Overall Servicing Block Diagram	4-103
4-51A.	Radio Receiver R-1051B/URR, Overall Servicing Diagram	4-104A
4-52.	RF Amplifier Electronic Assembly, Servicing Block Diagram	4-105
4-53.	RF Translator Electronic Subassembly, Servicing Block Diagram	4-107
4-54.	Receiver Mode Selector Electronic Assembly Servicing Block Diagram	4-109
4-55.	Receiver IF./Audio Amplifier Electronic Assembly, Servicing Block Diagram	4-111
4-56.	Frequency Standard Electronic Assembly, Servicing Block Diagram	4-113
4-56A.	Frequency Standard, Electronic Assembly, Servicing Block Diagram (Used on R-1051B/URR	4-114A
4-57.	Spectrum Generator Electronic Subassembly, Servicing Block Diagram	4-115

LIST OF ILLUSTRATIONS (Cont)

Figure Page

SECTION 4 - TROUBLE SHOOTING (Cont)

4-57A. Spectrum Generator Electronic Subassembly (of R-1051B/URR) Servicing Block Diagram 4-116A
4-58. 500 CPS Synthesizer Electronic Subassembly, Servicing Block Diagram . . . 4-117
4-58A. 100 CPS Synthesizer Electronic Subassembly, Servicing Block Diagram (Used on R-1051B/URR). 4-118A
4-58B. 100 CPS Synthesizer Electronic Subassembly, Servicing Block Diagram (Used on R-1051B/URR). . . . 4-118C
4-59. 1 and 10 KC Synthesizer Electronic Subassembly, Servicing Block Diagram . . . 4-119
4-60. 100 KC Synthesizer Electronic Subassembly, Servicing Block Diagram . . . 4-121
4-61. 1 MC Synthesizer Electronic Subassembly, Servicing Block Diagram. 4-123

SECTION 5 - MAINTENANCE

5-1. Radio Receiver R-1051/URR, Chassis and Main Frame, Schematic Diagram. 5-11
5-1A. Radio Receiver R-1051B/URR, Chassis and Main Frame, Schematic Diagram (Sheet 1) . . . 5-14A
5-1A. Radio Receiver R-1051B/URR, Chassis and Main Frame, Schematic Diagram (Sheet 2) . . . 5-14C
5-2. Receiver Mode Selector Electronic Assembly, Schematic Diagram. 5-15
5-2A. Receiver Mode Selector Electronic Assembly, Schematic Diagram. 5-16A
5-3. Receiver IF./Audio Amplifier Electronic Assembly, Schematic Diagram 5-17
5-4. RF Amplifier Electronic Assembly, Schematic Diagram 5-19
5-4A. RF Amplifier Electronic Assembly, Schematic Diagram 5-20A

Figure Page

SECTION 5 - MAINTENANCE (Cont)

5-5. Frequency Standard Electronic Assembly, Schematic Diagram 5-21
5-5A. Frequency Standard Electronic Assembly, Schematic Diagram (Used on R-1051B/URR). 5-22A
5-6. 1 MC Synthesizer Electronic Subassembly, Schematic Diagram 5-23
5-6A. 1 MC Synthesizer Electronic Subassembly, Schematic Diagram 5-24A
5-7. 100 KC Synthesizer Electronic Subassembly, Schematic Diagram 5-25
5-7A. 100 KC Synthesizer Electronic Subassembly, Schematic Diagram 5-26A
5-8. 1 and 10 KC Synthesizer Electronic Subassembly, Schematic Diagram. 5-27
5-9. 500 CPS Synthesizer, Electronic Subassembly, Schematic Diagram 5-29
5-9A. 100 CPS Synthesizer Electronic Subassembly, Schematic Diagram (Used on R-1051B/URR). 5-30A
5-9B. 100 CPS Synthesizer Electronic Subassembly, Schematic Diagram (Used on R-1051B/URR). 5-30C
5-10. Spectrum Generator Electronic Subassembly, Schematic Diagram (Used on R-1051B/URR). 5-31
5-10A. Spectrum Generator Electronic Subassembly, Schematic Diagram (Used on R-1051B/URR). 5-32A
5-10B. Spectrum Generator Electronic Subassembly (of R-1051B/URR), Schematic Diagram . . . 5-32C
5-11. RF Translator Electronic Subassembly, Schematic Diagram. 5-33
5-12. Code Generator Electronic Assembly, Schematic Diagram. 5-35
5-13. Radio Receiver R-1051/URR, Primary Power Distribution Diagram 5-37

LIST OF ILLUSTRATIONS (Cont)

Figure Page

SECTION 5 - MAINTENANCE (Cont)

5-14. Radio Receiver R-1051/URR, Top View, Case Removed, Component and Test Point Location 5-39
5-15. Radio Receiver R-1051/URR, Chassis, Top View, Component Location 5-40
5-15A. Radio Receiver R-1051B/URR, Top View, Case Removed, Component and Test Point Location 5-40A

Figure Page

SECTION 5 - MAINTENANCE (Cont)

5-15B. Radio Receiver R-1051B/URR, Bottom View, Case Removed, Component and Test Point Location 5-40B
5-16. Radio Receiver R-1051/URR, Chassis, Bottom View, Component and Test Point Location 5-41
5-17. Radio Receiver R-1051/URR, Case, Rear View 5-42

LIST OF ILLUSTRATIONS (Cont)

Figure Page

SECTION 5 - MAINTENANCE (Cont)

5-18. Radio Receiver R-1051/URR, Case, Inside View 5-43
5-19. Receiver Power Supply (Foil Side Up), Component Location 5-45
5-20. Receiver 500 CPS Control (Foil Side Up), Component Location 5-47
5-21. Antenna Overload (Foil Side Up), Component Location ... 5-48
5-21A. 4 VDC Power Supply and Vernier Control (Foil Side Up), Component Location ... 5-48A
5-22. Receiver Mode Selector Electronic Assembly, Left Side View, Component Location 5-49
5-23. Mode Gates (Foil Side Up), Component and Test Point Location 5-50
5-24. Receiver Mode Selector Electronic Assembly, Right Side, Component Location .. 5-51
5-25. 500 KC Gate (Foil Side Up), Component and Test Point Location 5-52
5-26. BFO and Amplifier (Foil Side Up), Component and Test Point Location 5-53
5-27. Receiver IF./Audio Amplifier Electronic Assembly, Right Side, Component Location... 5-54
5-28. Step AGC and Audio Amplifier (Foil Side Up), Component and Test Point Location..... 5-55
5-29. Product/AM Detectors (Foil Side Up), Component and Test Point Location 5-57
5-30. Receiver IF./Audio Amplifier Electronic Assembly, Left Side, Component Location 5-58
5-31. Gain-Controlled IF. Amplifier (Foil Side Up), Component and Test Point Location..... 5-59
5-32. RF Amplifier Electronic Assembly, Front and Left Side, Component Location 5-61
5-33. RF Amplifier Electronic Assembly, Rear and Right Side, Component Location 5-62

Figure Page

SECTION 5 - MAINTENANCE (Cont)

5-34. Megacycle Assembly A3 (Foil Side Up), Component Location 5-63
5-35. Megacycle Assembly A4, A14, or A22 (Foil Side Up), Component Location..... 5-64
5-36. Megacycle Assembly A5, A8, or A29 (Foil Side Up), Component Location 5-65
5-37. Megacycle Assembly A6 or A7 (Foil Side Up), Component Location 5-66
5-38. Megacycle Assembly A9 (Foil Side Up), Component Location 5-67
5-39. Megacycle Assembly A10 (Foil Side Up), Component Location 5-68
5-40. Megacycle Assembly A11, A15, or A16 (Foil Side Up), Component Location 5-69
5-41. Megacycle Assembly A12, A13, or A23 (Foil Side Up), Component Location 5-70
5-42. Megacycle Assembly A17 (Foil Side Up), Component Location 5-71
5-43. Megacycle Assembly A18 (Foil Side Up), Component Location 5-72
5-44. Megacycle Assembly A19 (Foil Side Up), Component Location 5-73
5-45. Megacycle Assembly A20 (Foil Side Up), Component Location 5-74
5-46. Megacycle Assembly A21 (Foil Side Up), Component Location 5-75
5-47. Megacycle Assembly A24, A27, or A28 (Foil Side Up), Component Location 5-76
5-48. Megacycle Assembly A25 (Foil Side Up), Component Location 5-77
5-49. Megacycle Assembly A26 (Foil Side Up), Component Location 5-78
5-50. Megacycle Assembly A2 (Foil Side Up), Component Location 5-79

LIST OF ILLUSTRATIONS (Cont)

Figure		Page
	SECTION 5 - MAINTENANCE (Cont)	
5-51.	RF Amplifier Electronic Assembly, Turret Removed, Front and Left Side, Component and Test Point Location	5-98
5-52.	RF Amplifier Bias Circuit (Foil Side Up), Component Location	5-81
5-53.	RF Amplifier Electronic Assembly, Turret Removed, Rear and Right Side, Component Location	5-82
5-54.	HF Mixer/Amplifier (Foil Side Up), Component Location	5-83
5-55.	100 KC Rotor Assembly A30 (Component Side Down), Component Location	5-84
5-56.	10 KC Rotor Assembly A31 (Component Side Down), Component Location	5-85
5-57.	100 KC Rotor Assembly A33 (Component Side Down), Component Location	5-86
5-58.	100 KC Rotor Assembly A34 (Component Side Down), Component Location	5-87
5-59.	10 KC Rotor Assembly A36 (Component Side Down), Component Location	5-88
5-60.	100 KC Rotor Assembly A37 (Component Side Down), Component Location	5-89
5-61.	Frequency Standard Electronic Assembly, Front View (Oven Disassembled), Component Location	5-90
5-61A.	Frequency Standard Electronic Assembly, Front View (Oven Disassembled), Component Location (Used on R-1051B/URR)	5-90A
5-62.	5 MC Multiplier, Dividers, and Comparator (Foil Side Up), Component Location	5-91
5-62A.	5 MC Multiplier, Dividers, and Comparator (Foil Side Up), Component Location (Used on R-1051B/URR)	5-92A
5-62B.	Oven, Component Location (Used on R-1051B/URR)	5-92B
	SECTION 5 - MAINTENANCE (Cont)	
5-63.	Oven Control and Buffer Amplifier (Foil Side Up), Component Location	5-93
5-64.	5 MC Oscillator (Foil Side Up), Component Location	5-94
5-64A.	5 MC Oscillator (Foil Side Up), Component Location (Used on R-1051B/URR)	5-94A
5-65.	Translator/Synthesizer Electronic Assembly, Bottom View, Component Location	5-95
5-66.	1 MC Synthesizer Electronic Subassembly, Front View, Component Location	5-96
5-67.	MC Oscillator (Foil Side Up), Component Location	5-97
5-68.	MC Oscillator AGC (Foil Side Up), Component and Test Point Location	5-98
5-69.	1 MC Synthesizer Electronic Subassembly, Rear View, Component Location	5-99
5-70.	Spectrum Generator/Mixer (Foil Side Up), Component and Test Point Location	5-101
5-71.	100 KC Synthesizer Electronic Subassembly, Front View, Component Location	5-103
5-72.	17.847/27.847 MC Mixer (Foil Side Up), Component and Test Point Location	5-105
5-73.	100 KC Synthesizer Electronic Subassembly, Right Side, Component Location	5-107
5-74.	4.553 MC to 5.453 MC Oscillator (Foil Side Up), Component Location	5-108
5-75.	100 KC Synthesizer Electronic Subassembly, Rear View, Component Location	5-109
5-76.	Hi-Band/Lo-Band Mixer/Amplifier (Foil Side Up), Component and Test Point Location	5-111

LIST OF ILLUSTRATIONS (Cont)

Figure Page

SECTION 5 - MAINTENANCE (Cont)

5-77. 100 KC Synthesizer Electronic Subassembly, Left Side, Component Location..... 5-113
5-78. 10.747 MC Mixer (Foil Side Up), Component and Test Point Location 5-114
5-79. 100 KC Synthesizer Electronic Subassembly, Top View, Component Location. 5-115
5-80. 10.747 MC Mixer AGC (Foil Side Up), Component and Test Point Location 5-116
5-81. 1 and 10 KC Synthesizer Electronic Subassembly, Front View, Component Location..... 5-117
5-82. 5.25 MC to 5.16 MC Oscillator (Foil Side Up) Component and Test Point Location..... 5-118
5-83. 1.850 MC to 1.859 MC Oscillator (Foil Side Up) Component and Test Point Location..... 5-119
5-84. 7.089 MC Mixer (Foil Side Up), Component and Test Point Location 5-121
5-85. 1 and 10 KC Synthesizer Electronic Subassembly, Rear View, Component Location..... 5-123
5-86. 1 and 10 KC Synthesizer Output Circuit (Foil Side Up), Component and Test Point Location..... 5-125
5-87. 1 and 10 KC Synthesizer Electronic Subassembly, Bottom View, Component Location..... 5-127
5-88. 1 and 10 KC Synthesizer Electronic Subassembly, Top View, Component Location..... 5-127
5-89. 500 CPS Synthesizer Electronic Subassembly, Left Side, Component Location . 5-128
5-90. 7.1 MC Mixer (Foil Side Up), Component and Test Point Location..... 5-129

Figure Page

SECTION 5 - MAINTENANCE (Cont)

5-91. 500 CPS Synthesizer Electronic Subassembly, Front View, Component Location 5-131
5-92. 500 CPS Oscillator (Foil Side Up), Component and Test Point Location 5-133
5-93. 500 CPS Synthesizer Electronic Subassembly, Right Side, Component Location . 5-135
5-94. Divide-By-Ten Multivibrators (Foil Side Up), Component and Test Point Location 5-137
5-94A. 100 CPS Synthesizer Electronic Subassembly, Left Side View, Component and Test Point Location (Used on R-1051B/URR).. 5-138A
5-94B. 100 CPS Synthesizer Electronic Subassembly, Right Side View, Component and Test Point Location (Used on R-1051B/URR) 5-138B
5-94C. 100 CPS Synthesizer Electronic Subassembly, Top View, Component and Test Point Location (Used on R-1051B/URR) 5-138C
5-94D. 100 CPS Oscillator (Foil Side Up), Component and Test Point Location (Used on R-1051B/URR)..... 5-138D
5-94E. 7.1 MC Mixer (Foil Side Up), Component and Test Point Location (Used on R-1051B/URR) 5-138E
5-94F. 7.1 MC Mixer (Top View), Component and Test Point Location (Used on R-1051B/URR) 5-138F
5-94G. Preset Counter (Foil Side Up), Component and Test Point Location (Used on R-1051B/URR) 5-138G
5-94H. Preset Counter (Top View), Component and Test Point Location (Used on R-1051B/URR) 5-138H

LIST OF ILLUSTRATIONS (Cont)

Figure		Page
	SECTION 5 - MAINTENANCE (Cont)	
5-95.	Spectrum Generator Electronic Subassembly, Component Location	5-139
5-95A.	Spectrum Generator Electronic Subassembly, Component Location	5-140A
5-96.	100 KC Spectrum Generator (Foil Side Up), Component and Test Point Location	5-141
5-97.	10 KC Spectrum Generator (Foil Side Up), Component and Test Point Location	5-143
5-98.	1 KC Spectrum Generator (Foil Side Up), Component and Test Point Location	5-145
5-99.	5 KC Spectrum Generator (Foil Side Up), Component and Test Point Location	5-147
5-99A.	1 KC Pulse Inverter (Foil Side Up), Component and Test Point Location	5-148A
5-100.	RF Translator Electronic Subassembly, Component Location	5-149
5-101.	RF Translator (Foil Side Up), Component and Test Point Location	5-151
5-102.	Code Generator Electronic Assembly, Component Location	5-153

LIST OF TABLES

Table		Page
	SECTION 1 - GENERAL INFORMATION	
1-1.	Radio Receiver R-1051/URR, Reference Designations	1-1
1-2.	Radio Receiver R-1051/URR, Crystal Complement	1-3
1-3.	Radio Receiver R-1051/URR, Equipment Supplied	1-5
1-4.	Radio Receiver R-1051/URR, Equipment and Publications Required but Not Supplied	1-5
1-5.	Radio Receiver R-1051/URR, Extender Test Cable Data	1-9
	SECTION 3 - OPERATION	
3-1.	Receiver R-1051/URR, Operating Controls, Indicators, and Connectors	3-3
3-2.	Receiver R-1051/URR, Operator's Preventive Maintenance Checks	3-6
	SECTION 4 - TROUBLE SHOOTING	
4-1.	Divide-by-Ten Multivibrator, Timing Chart	4-89
4-2.	Tuning Code Chart	4-97
4-3.	Mode Selector Switch S2, LSB Position	4-99
4-4.	Mode Selector Switch S2, FSK Position	4-100
4-5.	Mode Selector Switch S2, AM Position	4-100
4-6.	Mode Selector Switch S2, CW Position	4-101
4-7.	Mode Selector Switch S2, USB Position	4-101
4-8.	Mode Selector Switch S2, ISB Position	4-102
	SECTION 5 - MAINTENANCE	
5-1.	Radio Receiver R-1051/URR, Spare Connector Pins and Spare Filters	5-10
	SECTION 6 - PARTS LIST	
6-0.	Supplementary Parts List	6-2A
6-1A.	Supplementary Parts List	6-2E
6-1B.	Supplementary Parts List	6-2U
6-1.	Maintenance Parts List	6-3
6-2.	List of Manufacturers	6-75

Note

Official nomenclature of this equipment is "Radio Receiver R-1051/URR". In this publication, the nomenclature has been abbreviated to "Receiver R-1051/URR". This abbreviated nomenclature shall, in all cases, be construed as equivalent in meaning to the official nomenclature.

INTRODUCTION

All references made in this manual to Radio Receiver R-1051/URR are also applicable to Radio Receiver R-1051B/URR. The major difference between the two radio receivers is the capability of the R-1051B/URR to receive on any one of 280,000 channels, spaced in 0.1 kilocycle increments, in the frequency range of 2.0 to 29.9999 megacycles. This difference is a result of a modification to the Translator/Synthesizer Electronic Assembly. Other minor changes occurring as a result of this modification are noted throughout both volumes of this manual.

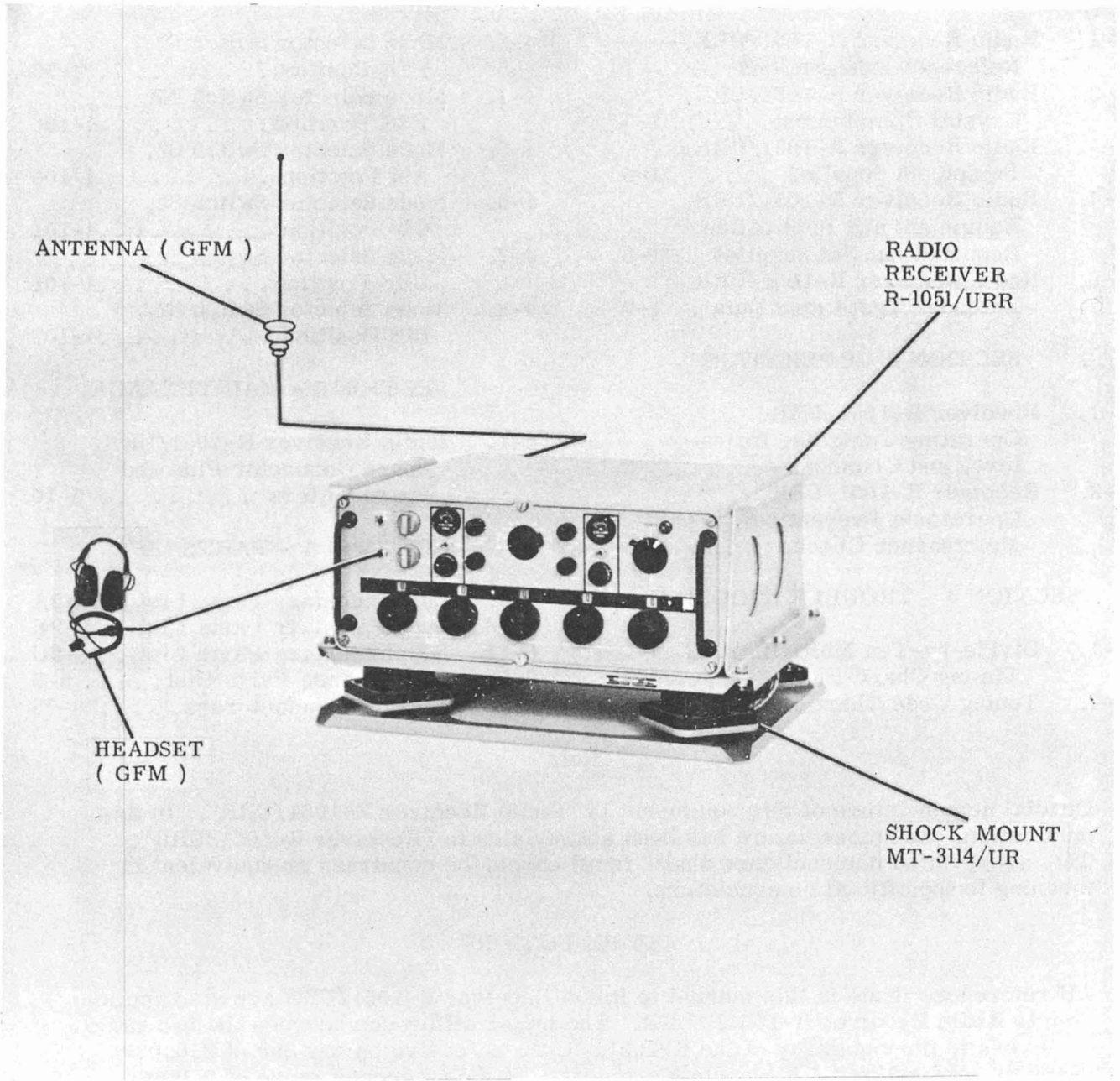

Figure 1-1. Radio Receiver R-1051/URR, Typical Relationship of Units

SECTION 1

GENERAL INFORMATION

1-1. SCOPE.

1-2. This Technical Manual is in effect upon receipt and supersedes NAVSHIPS 94841. Extracts from this publication may be made to facilitate the preparation of other Department of Defense publications.

1-3. Volume I of this Technical Manual describes Radio Receiver R-1051/URR (R-1051/URR) and covers installation, troubleshooting procedures, maintenance procedures and a parts list for this unit. Operating procedures for the R-1051/URR are contained in Volume II of this Technical Manual.

1-4. GENERAL DESCRIPTION.

1-5. The R-1051/URR is a digitally tuned, superheterodyne receiver capable of receiving lower sideband (LSB), upper sideband (USB), independent sideband (ISB), frequency shift keyed (FSK), amplitude modulated (AM), and continuous wave (CW) transmissions in the 2.0- to 30.0 megacycle frequency range. The ISB mode of operation allows two different types of intelligence to be received simultaneously, one on the LSB channel and one on the USB channel. FSK reception is obtained by using suitable ancillary equipment, such as Teletype Converter-Comparator AN/URA-17 or AN/URA-8. The R-1051/URR may also receive tone-modulated continuous wave (MCW), compatible amplitude modulated (compatible AM), and facsimile (through the use of suitable ancillary equipment) transmissions. The R-1051/URR may be operated in conjunction with a transmitter, as a transmitter-receiver in systems such as Radio Set AN/WRC-1. In this application either simplex or duplex operation is possible. The R-1051/URR may also be used as a separate, self-contained receiver requiring only a headset, antenna, and a nominal 115-vac primary power source for full operation. The functional relationship of the R-1051/URR to accessory equipment is illustrated in figure 1-1. The R-1051/URR is intended for ship and shore installations. For either type of installation, the R-1051/URR may be mounted in a standard 19-inch rack, or may be mounted to the supplied shock mount.

1-6. REFERENCE DESIGNATIONS.

1-7. Reference designations of the electronic assemblies and subassemblies of the R-1051/URR are listed in table 1-1. See figure 1-2 for location of electronic assemblies and subassemblies in the R-1051/URR.

TABLE 1-1. RADIO RECEIVER R-1051/URR, REFERENCE DESIGNATIONS

ASSEMBLY OR SUBASSEMBLY	REFERENCE DESIGNATION
Receiver Main Frame	A2
Receiver Mode Selector	A2A1
Receiver IF./Audio Amplifier	A2A2 and A2A3
RF Amplifier	A2A4
Frequency Standard	A2A5
Translator/Synthesizer	A2A6
1 MC Synthesizer	A2A6A1
100 KC Synthesizer	A2A6A2
1 and 10 KC Synthesizer	A2A6A3
500 CPS Synthesizer	A2A6A4
Spectrum Generator	A2A6A5
RF Translator	A2A6A6
Code Generator	A2A7
Power Supply	A2A8

1-8. FUNCTION.

1-9. The function of the R-1051/URR is to extract the intelligence from any USB, LSB, ISB, CW or AM transmissions in the 2.0 to 30.0 megacycle frequency range. The R-1051/URR is also capable of receiving MCW, compatible AM, facsimile, and FSK signals, using suitable ancillary equipment.

1-10. PHYSICAL CHARACTERISTICS.

1-11. The R-1051/URR is housed in a metal case. The chassis is mounted on roller-type

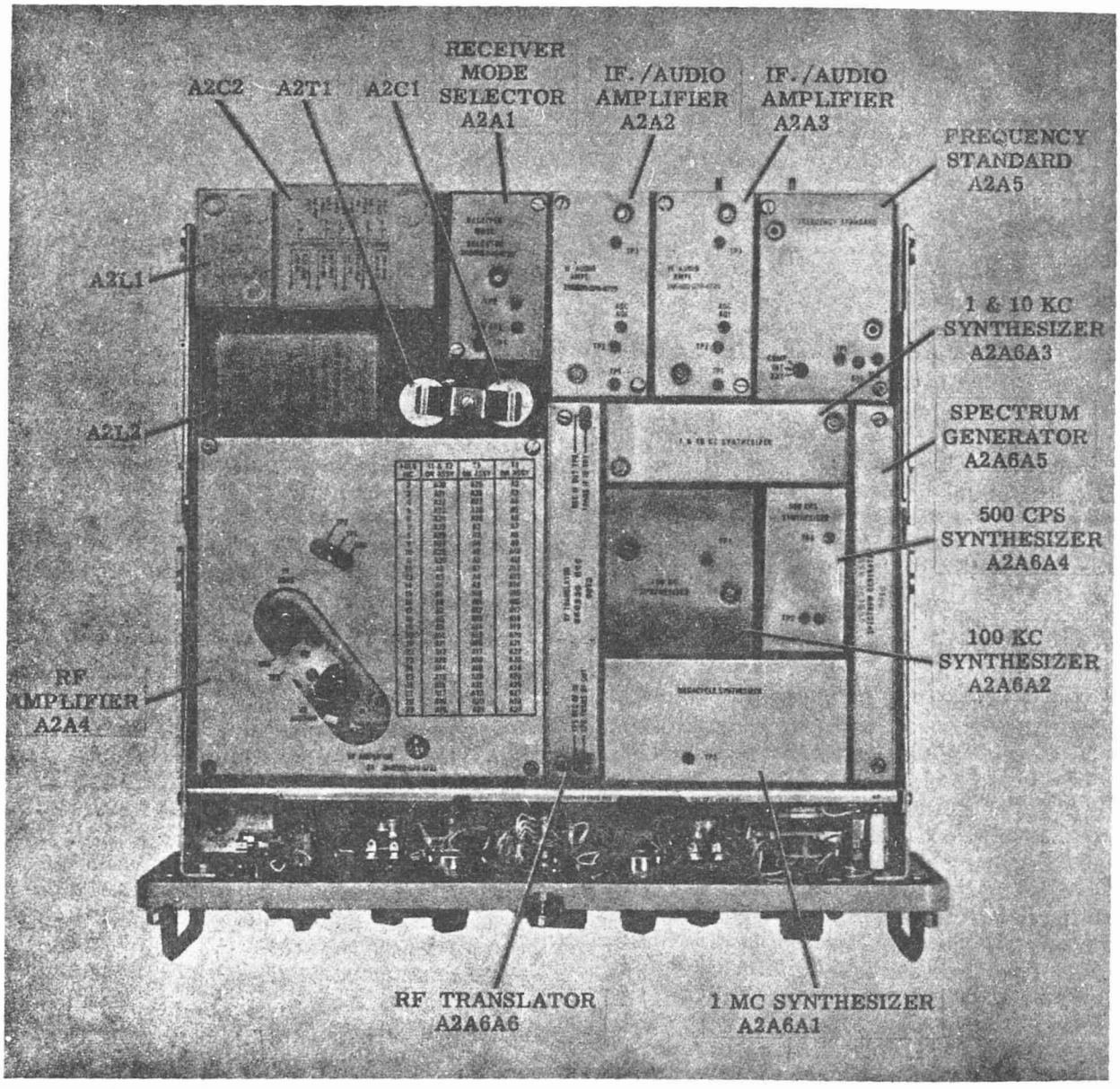

Figure 1-2. Radio Receiver R-1051/URR, Top View, Case Removed

slides (one on each side) and is secured to the case by six (6) captive screws through the front panel. When fully extended from the case, the chassis may be tilted on the slides at 90 degree angles to expose the bottom for servicing. All operating controls and indicators are located on the front panel, and all power and signal input connections are made on the rear of the case. Handles are secured to the front panel to facilitate withdrawal of the chassis and transporting the unit. The chassis contains the chain drive mechanism for tuning, the receptacles for the plug-in electronic assemblies, and a power supply.

1-12. ELECTRICAL CHARACTERISTICS.

1-13. The R-1051/URR employs a digital tuning scheme for automatically tuning to any one of 56,000 operating channels. Additional vernier tuning provides continuous tuning throughout the frequency range. All circuits (except

TABLE 1-2. RADIO RECEIVER R-1051/URR, CRYSTAL COMPLEMENT

REF. DESIG.	TYPE OF CUT	CRYSTAL OSC. FREQ. (MC)	OPERATING TEMP. RANGE	TOLERANCE (PERCENT)
A2A5A3Y1	AT	5.000000	84.5°C to 85.5°C	0.001
A2A6A1Y1	AT	2.498850	0°C to 75°C	0.003
A2A6A1Y2	AT	3.499720	0°C to 75°C	0.003
A2A6A1Y3	AT	4.499640	0°C to 75°C	0.003
A2A6A1Y4	AT	5.499640	0°C to 75°C	0.003
A2A6A1Y5	AT	7.499400	0°C to 75°C	0.003
A2A6A1Y6	AT	8.499320	0°C to 75°C	0.003
A2A6A1Y7	AT	9.499160	0°C to 75°C	0.003
A2A6A1Y8	AT	10.499160	0°C to 75°C	0.003
A2A6A1Y9	AT	11.499080	0°C to 75°C	0.003
A2A6A1Y10	AT	12.499000	0°C to 75°C	0.003
A2A6A1Y11	AT	14.498840	0°C to 75°C	0.003
A2A6A1Y12	AT	15.498760	0°C to 75°C	0.003
A2A6A1Y13	AT	16.498680	0°C to 75°C	0.003
A2A6A1Y14	AT	17.498600	0°C to 75°C	0.003
A2A6A1Y15	AT	18.498440	0°C to 75°C	0.003
A2A6A1Y16	AT	20.498360	0°C to 75°C	0.003
A2A6A1Y17	AT	23.498120	0°C to 75°C	0.003
A2A6A2Y1	AT	4.553	0°C to 75°C	0.003
A2A6A2Y2	AT	4.653	0°C to 75°C	0.003
A2A6A2Y3	AT	4.753	0°C to 75°C	0.003
A2A6A2Y4	AT	4.853	0°C to 75°C	0.003
A2A6A2Y5	AT	4.953	0°C to 75°C	0.003
A2A6A2Y6	AT	5.053	0°C to 75°C	0.003
A2A6A2Y7	AT	5.153	0°C to 75°C	0.003
A2A6A2Y8	AT	5.253	0°C to 75°C	0.003
A2A6A2Y9	AT	5.353	0°C to 75°C	0.003
A2A6A2Y10	AT	5.453	0°C to 75°C	0.003
A2A6A3Y1	AT	5.250	0°C to 75°C	0.003
A2A6A3Y2	AT	5.240	0°C to 75°C	0.003
A2A6A3Y3	AT	5.230	0°C to 75°C	0.003
A2A6A3Y4	AT	5.220	0°C to 75°C	0.003
A2A6A3Y5	AT	5.210	0°C to 75°C	0.003
A2A6A3Y6	AT	5.200	0°C to 75°C	0.003
A2A6A3Y7	AT	5.190	0°C to 75°C	0.003
A2A6A3Y8	AT	5.180	0°C to 75°C	0.003
A2A6A3Y9	AT	5.170	0°C to 75°C	0.003
A2A6A3Y10	AT	5.160	0°C to 75°C	0.003
A2A6A3Y11	AT	1.850	0°C to 75°C	0.003
A2A6A3Y12	AT	1.851	0°C to 75°C	0.003
A2A6A3Y13	AT	1.852	0°C to 75°C	0.003
A2A6A3Y14	AT	1.853	0°C to 75°C	0.003
A2A6A3Y15	AT	1.854	0°C to 75°C	0.003
A2A6A3Y16	AT	1.855	0°C to 75°C	0.003
A2A6A3Y17	AT	1.856	0°C to 75°C	0.003
A2A6A3Y18	AT	1.857	0°C to 75°C	0.003
A2A6A3Y19	AT	1.858	0°C to 75°C	0.003
A2A6A3Y20	AT	1.859	0°C to 75°C	0.003

two rf amplification stages) utilize solid-state devices. These circuits are assembled into plug-in electronic assemblies. The frequency generation circuits, which are referenced to an ultra-stable frequency standard, provide a stability of 1 part in 10^8 per day.

1-14. REFERENCE DATA.

1-15. The following performance data provide a summary of the electrical characteristics of the R-1051/URR:

a. Frequency range: 2 to 29.9995 mc in 0.5-kc increments or 2.0 to 30.0 mc with continuous vernier tuning between 1kc increments.

b. Receiver type: superheterodyne.

c. Frequency stability: 1 part in 10^8 per day.

d. Type of frequency control: crystal controlled synthesizer referenced to a 5-megacycle internal or external standard.

e. Modes of operation: LSB, USB, ISB, AM, CW, and FSK.

f. Sensitivity: 1 microvolt for 10 db $\frac{S+N}{N}$ in SSB mode; 2 microvolts for CW and FSK modes; and 4 microvolts in compatible AM mode.

g. Receiver if.: first, 20 or 30 mc; second 2.85 mc; third, 500 kc.

h. Bandwidth: SSB, 3.2 kc; AM and CW, 7 kc.

i. Recommended antenna: 50-ohm impedance.

j. Ambient temperature limitations: 0°C to +50°C.

k. Power consumption: 55 watts.

l. Primary power requirements: 115 vac ±10 per cent, single phase, 48 to 450 cps.

m. IF. rejection: -75 db.

n. Image rejection: -80 db.

o. Audio output: 60 mw (minimum) into 600-ohms balanced or unbalanced remote output load; 15 mw (minimum) into 600-ohms unbalanced load (local headset).

p. Audio distortion: less than 3 per cent.

1-16. CRYSTAL COMPLEMENT.

1-17. The crystal complement of the R-1051/URR is lised in table 1-2.

1-18. EQUIPMENT SUPPLIED.

1-19. Equipment supplied with the R-1051/URR is listed in table 1-3.

1-20. EQUIPMENT AND PUBLICATIONS REQUIRED BUT NOT SUPPLIED.

1-21. Accessory and test equipment and publications required but not supplied with the R-1051/URR are listed in table 1-4.

1-22. EXTENDER TEST CABLE DATA.

1-23. Table 1-5 lists pertinent extender test cable data for the R-1051/URR.

1-24. PREPARATION FOR RESHIPMENT.

1-25. To prepare the R-1051/URR for reshipment, proceed as follows:

a. Ensure that all electronic assemblies are fastened securely. Check that tubes V1 and V2 in RF Amplifier Electronic Assembly A2A4 are mounted properly, using vibration-proof shields provided.

b. Set Mode Selector switch at OFF.

c. For reshipment, use containers and packing material similar to those originally used to ship the R-1051/URR.

TABLE 1-3. RADIO RECEIVER R-1051/URR, EQUIPMENT SUPPLIED (Continued)

QTY PER EQUIP	NOMENCLATURE		UNIT NO.	*OVER-ALL DIMENSIONS (IN.)			VOLUME (CU FT)	WEIGHT (LB)
	NAME	DESCRIPTION		HEIGHT	WIDTH	DEPTH		
1	Radio Receiver	R-1051/URR	1	7	17.38	18.9	1.33	70
1	Shock Mount	MT-3114/UR		4.25	19.71	16.66	0.81	16
1	Kit, Bracket Mounting							
1	Kit, Connector Mating							
1	Kit, Extender Test Cable	W1, W2, and W3						
1	Technical Manual for Radio Receiver R-1051/URR	NAVSHIPS 94841(A)						
1	Maintenance Standards Book for Radio Receiver R-1051/URR	NAVSHIPS 94841.42						
1	Performance Standards Sheet for Radio Receiver R-1051/URR	NAVSHIPS 94841.32						
*Includes mounting materials								

TABLE 1-4. RADIO RECEIVER R-1051/URR, EQUIPMENT AND PUBLICATIONS REQUIRED BUT NOT SUPPLIED

QTY PER EQUIP	NOMENCLATURE		REQUIRED USE	EQUIPMENT CHARACTERISTICS
	NAME	DESIGNATION		
1	Antenna		Reception of rf signals	
1	Cable Set		Interconnection	
1	Headset		General operation	
1	Teletype Converter-Comparator	AN/URA-8 or AN/URA-17 (or equiv.)	FSK operation	
1	Audio Amplifier	AM-215/U (or equiv.)	Speaker amplifier	

TABLE 1-4. RADIO RECEIVER R-1051/URR, EQUIPMENT AND PUBLICATIONS REQUIRED BUT NOT SUPPLIED (Continued)

QTY PER EQUIP	NOMENCLATURE		REQUIRED USE	EQUIPMENT CHARACTERISTICS
	NAME	DESIGNATION		
1	Speaker	LS-474/U (or equiv.)	Audio monitoring	
1	Multimeter	AN/PSM-4 (or equiv.)	Trouble-shooting and maintenance procedures	Ranges: 0 to 100 vdc, 9 ranges, 20,000 ohms/volt 0 to 250 vac, 8 ranges, 5,000 ohms/volt 0 to 20 mego, 5 ranges Accuracy: ±2 per cent
1	Multimeter, Electronic	CCVO-91CA (or equiv.)	Trouble-shooting and maintenance procedures	Input impedance: 20,000 ohms/volt at 500 kc Ranges: 0 to 1 mv 0 to 10 mv 0 to 100 mv 0 to 300 mv 0 to 1000 mv 0 to 3000 mv
1	Multimeter, Electronic	ME-6( )/U (or equiv.)	Trouble-shooting and maintenance procedures	Frequency: 20 cps to 5 kc Input impedance: 100,000 ohms/volt Ranges: 0 to 0.1 v 0 to 0.3 v
1	Oscilloscope	AN/USM-105A (or equiv.)	Trouble-shooting and maintenance procedures	Frequency: DC to 15 mc Frequency response: 100 kc Ranges: 0.5 v peak-to-peak 3 v peak-to-peak 10 v peak-to-peak 2500 v peak-to-peak Sensitivity: 2 to 10 vdc

TABLE 1-4. RADIO RECEIVER R-1051/URR, EQUIPMENT AND PUBLICATIONS REQUIRED BUT NOT SUPPLIED (Continued)

QTY PER EQUIP	NOMENCLATURE		REQUIRED USE	EQUIPMENT CHARACTERISTICS
	NAME	DESIGNATION		
1	Frequency Meter	CAQI-524D (or equiv.)	Trouble-shooting and maintenance procedures	Frequency range: 0 to 30 mc Accuracy: ±0.1 cps
1	RF Signal Generator	CAQI-606A (or equiv.)	Trouble-shooting and maintenance procedures	Output impedance: 50 ohms Frequency range: 2 to 30 mc Output: 0 to 3 volts
1	Frequency Standard	AN/URQ-9 (or equiv.)	Trouble-shooting and maintenance procedures	Outputs: 100 kc, 500 kc, and 5 mc Stability: 1 part in 10^8 Output: 0.5 volt
1	Audio Signal Generator	An/URM-127 (or equiv.)	Trouble-shooting and maintenance procedures	Frequency range: 20 cps to 5 kc Output: 0 to 10 volts Output impedance: 600 ohms
1	Test Set, Amplifier	TS-2132/WRC-1	Testing RF Amplifier Electronic Assembly	Simulates actual operating conditions
1	Test Set, Translator/ Synthesizer	TS-2133/WRC-1	Testing Translator/ Synthesizer Electronic Assembly	Simulates actual operating conditions
1	Test Set, Frequency Standard	TS-2134/WRC-1	Testing Frequency Standard Electronic Assembly	Simulates actual operating conditions
1	Test Set, Electronic Circuit Plug-In Unit	TS-2135/WRC-1	Testing Common Electronic Assemblies	Simulates actual operating conditions
1	Coaxial T Connector		Trouble-shooting and maintenance procedures	50 ohms
1	AN/PSM-4 Technical Manual	NAVSHIPS 91583	Trouble-shooting and maintenance procedures	

TABLE 1-4. RADIO RECEIVER R-1051/URR, EQUIPMENT AND PUBLICATIONS REQUIRED BUT NOT SUPPLIED (Continued)

QTY PER EQUIP	NOMENCLATURE		REQUIRED USE	EQUIPMENT CHARACTERISTICS
	NAME	DESIGNATION		
1	CCVO-91CA Technical Manual		Trouble-shooting and maintenance procedures	
1	ME-6( )/U Technical Manual	NAVSHIPS 92423	Trouble-shooting and maintenance procedures	
1	AN/USM-105A Technical Manual		Trouble-shooting and maintenance procedures	
1	CAQI-606A Technical Manual		Trouble-shooting and maintenance procedures	
1	AN/URQ-9 Technical Manual		Trouble-shooting and maintenance procedures	
1	CAQI-524D Technical Manual		Trouble-shooting and maintenance procedures	
1	AN/URM-127 Technical Manual		Trouble-shooting and maintenance procedures	
1	Resistor	RC42GF510J	Trouble-shooting and maintenance procedures	
1	Repair Book for AN/WRC-1 And R-1051/URR 2N Modules	NAVSHIPS 95700	Trouble-shooting and maintenance procedures	
1	TS-2132/WRC-1 Test Data Booklet		Testing RF Amplifier Electronic Assembly	
1	TS-2133/WRC-1 Test Data Booklet		Testing Translator/ Synthesizer Electronic Assembly	
1	TS-2134/WRC-1 Test Data Booklet		Testing Frequency Standard Electronic Assembly	
1	TS-2135/WRC-1 Test Data Booklet		Testing Common Electronic Assemblies	

TABLE 1-5. RADIO RECEIVER R-1051/URR, EXTENDER TEST CABLE DATA

REF. DESIG.	NAME	MATES WITH
W1	Cable Assembly	P4 on Receiver IF./Audio Amplifier Electronic Assembly A2A2 or A2A3
W2	Cable Assembly	P1 on Receiver Mode Selector Electronic Assembly A2A1
W3	Cable Assembly	P2 on Receiver Mode Selector Electronic Assembly A2A1

SECTION 2

INSTALLATION

2-1. UNPACKING AND HANDLING.

2-2. Special procedures need not be followed when unpacking Radio Receiver R-1051/URR (R-1051/URR). Since the R-1051/URR is an accurately calibrated precision equipment, rough handling should be avoided. Handles are provided on the front panel for lifting or carrying the equipment. Extreme caution must be exercised when removing the unit from the packing container to prevent damage to the and connectors.

2-3. POWER REQUIREMENTS.

2-4. The R-1051/URR is designed to operate from a nominal 115 vac, single phase, 48 to 450 cps.

2-5. SITE SELECTION.

2-6. In selecting a shipboard installation site, adequate consideration must be given to space requirements (figure 2-1). This requirement includes space for servicing the slide-mounted equipment when extended from the cases, for shockmount deflection, and for cable bends. For best results, the antenna should be mounted as high as possible above the ship's superstructure.

2-7. In selecting a shore installation site, similar considerations must be given to the space requirements. The antenna should be mounted high enough to clear any surrounding hills, woods, or buildings. In addition, the antenna should be located as far as possible from any high power transmission lines or hospitals to prevent interference.

2-8. INSTALLATION REQUIREMENTS.

2-9. CONSIDERATIONS.

2-10. The following factors should be considered when determining the proper location for the R-1051/URR:

a. Best operating conditions.

b. Ease of maintenance, adjustment of equipment, and replacement and repair of defective parts.

c. Possibility of interaction between the R-1051/URR and other electronic equipment in the vicinity.

d. Critical and minimum cable length requirements.

e. Adequate heat dissipation.

f. Availability of a good system ground.

2-11. INSTALLATION.

2-12. The R-1051/URR may be installed independently in any convenient location, using shock mount MT-3114/UR aboard ship. The R-1051/URR may be mounted in a standard 19-inch rack. Adapter plates are used to install the R-1051/URR in a standard 19-inch wide rack. For all required installation dimensions, see figure 2-1. Figure 2-2 illustrates the mounting bracket used for rack mounting the R-1051/URR in a standard rack. Figure 2-3 illustrates mounting of the R-1051/URR to the shock mount.

2-13. If the R-1051/URR is to be installed as part of a system such as Radio Set AN/WRC-1, see Section 2 of NAVSHIPS 94840(A) for instructions.

WARNING

To avoid injury to personnel, do not over-stress mounting bolts, since shock may cause them to shear.

2-14. INTERCONNECTION.

2-15. All connections are made at the rear of the unit (figure 2-4), with the exception of

the receiver headset. An rf input is obtained by mating a type UG-941B/U connector and the necessary length of RG-215/U coaxial cable with connector J23, when the R-1051/URR is installed separately.

2-16. When the R-1051/URR is to be operated as a remote unit, connection is made to the remote audio lines and the power source as follows:

a. Connect the receiver switchboard remote audio lines to connectors J5 (USB) and J6 (LSB) on the rear of the R-1051/URR using type MS-3106J165-5S connectors.

b. Connect the power source to connector J3 (AUX AC PWR IN) on the rear of the R-1051/URR.

c. Loosen front panel screws and slide the R-1051/URR chassis from the case.

d. Set switch S7 (AUX/NORM) at AUX. This switch is located just behind the front panel on the left.

e. Slide chassis back into case and secure it.

2-17. When the R-1051/URR is to be operated as an independent unit, connect all cables as shown in figure 2-5. When the R-1051/URR is to be operated as part of a system, refer to Section 2 of NAVSHIPS 94840(A) for instructions.

2-18. If it is required to use an external frequency standard for operation of the R-1051/URR, proceed as follows:

a. Connect the output from the external frequency standard to connector J25 (EXT 5MC IN) on the rear of the R-1051/URR.

b. Loosen front panel screws and slide the R-1051/URR chassis out from the case.

c. Set switch S1 (COMP/INT/EXT) on top of the Frequency Standard Electronic Assembly at EXT. This electronic assembly is located at the right rear of the chassis.

d. Slide the chassis back into the case and secure it.

2-19. If it is required to use the output from the Frequency Standard Electronic Assembly to operate another unit, proceed as follows:

a. Loosen the front panel screws and slide the R-1051/URR chassis out from the case.

b. Set switch S1 (COMP/INT/EXT) on top of the Frequency Standard Electronic Assembly at COMP. This electronic assembly is located at the right rear of the chassis.

c. Slide chassis back into case and secure it.

d. Connect cable between connector J24 (INT 5MC OUT) on the rear of the R-1051/URR and the frequency standard input connector on the other unit.

2-20. If it is required to use an external frequency standard for calibration, proceed as follows:

a. Connect the output from the external frequency standard to connector J25 (EXT 5MC IN) on the rear of the R-1051/URR.

b. Loosen front panel screws and slide R-1051/URR chassis out from case.

c. Set switch S1 (COMP/INT/EXT) on top of the Frequency Standard Electronic Assembly at COMP. This electronic assembly is located at the right rear of the chassis.

d. After performing required calibration, set switch S1 back to required position. Slide chassis back into case and secure it.

2-21. If the internal frequency standard is to be used for operation, ensure that switch S1 (COMP/INT/EXT) on top of the Frequency Standard Electronic Assembly is set at INT. This electronic assembly is located at the right rear of the chassis.

2-22. If the R-1051/URR is to be used in simplex operation, connect all cables as shown in figure 2-5. Then, proceed as follows:

a. Loosen front panel screws and slide the R-1051/URR chassis out from the case.

b. Set switch S9 (SIMPLEX/DUPLEX) at SIMPLEX. This switch is located just behing the front panel on the left.

c. Slide chassis back into case and secure it.

2-23. If the R-1051/URR is to be used in duplex operation, proceed as follows:

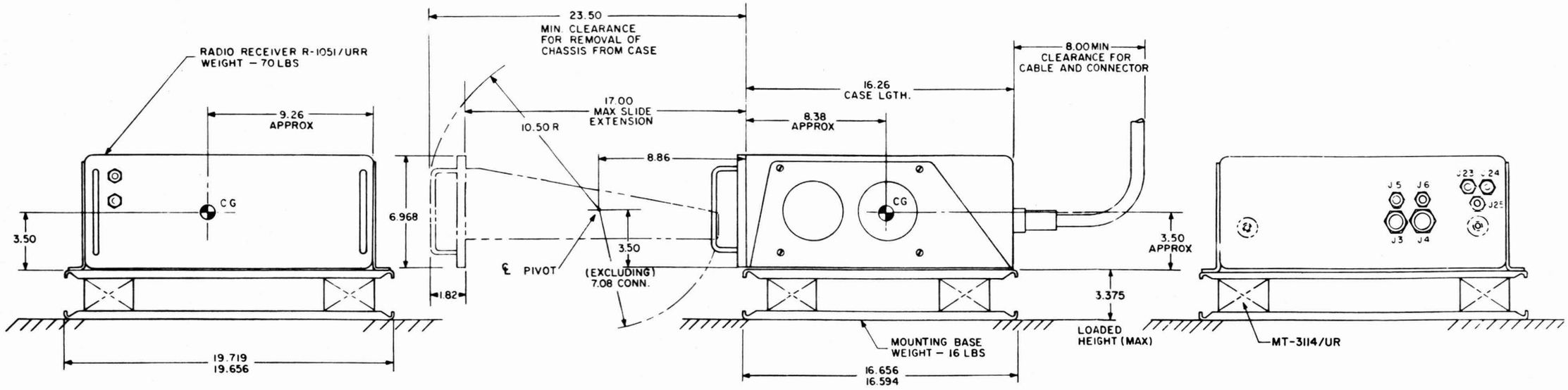

FRONT VIEW

REAR VIEW

NOTE:
SHOCK MOUNT MT-3114/UR IS
USED ONLY WHEN THE R-1051/URR
IS INSTALLED AS AN INDEPENDENT UNIT.

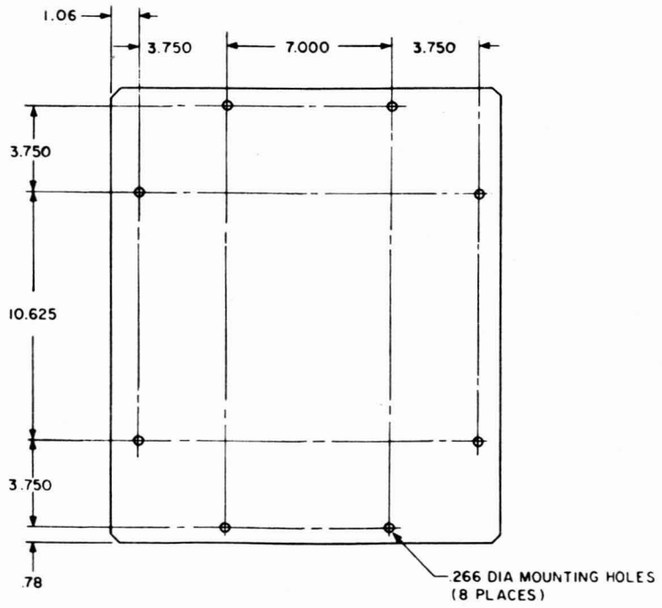

MOUNTING TEMPLATE

Figure 2-1. Radio Receiver R1051/URR, Dimensions

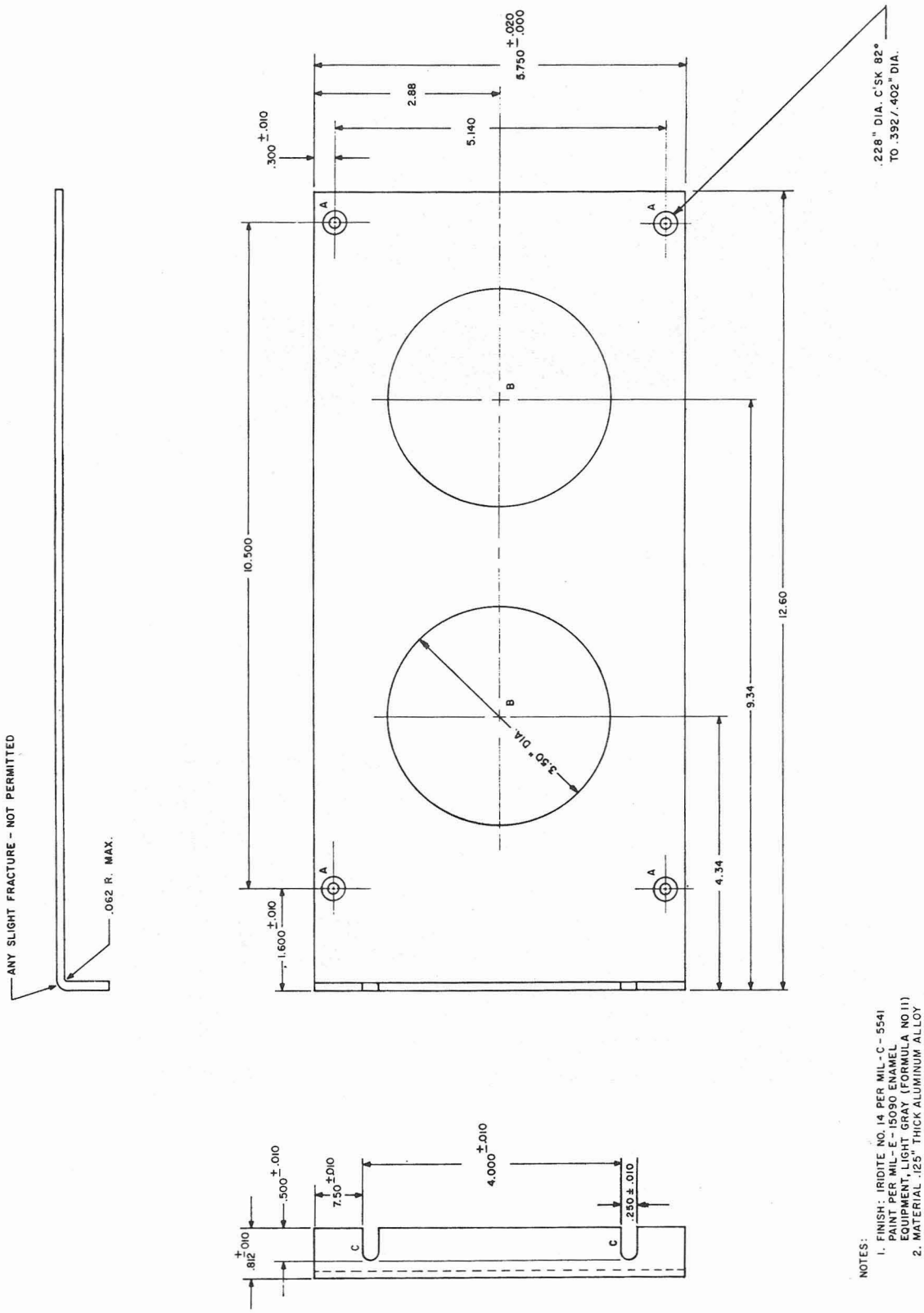

Figure 2-2. Radio Receiver R-1051/URR, Mounting Bracket for Rack Mounting

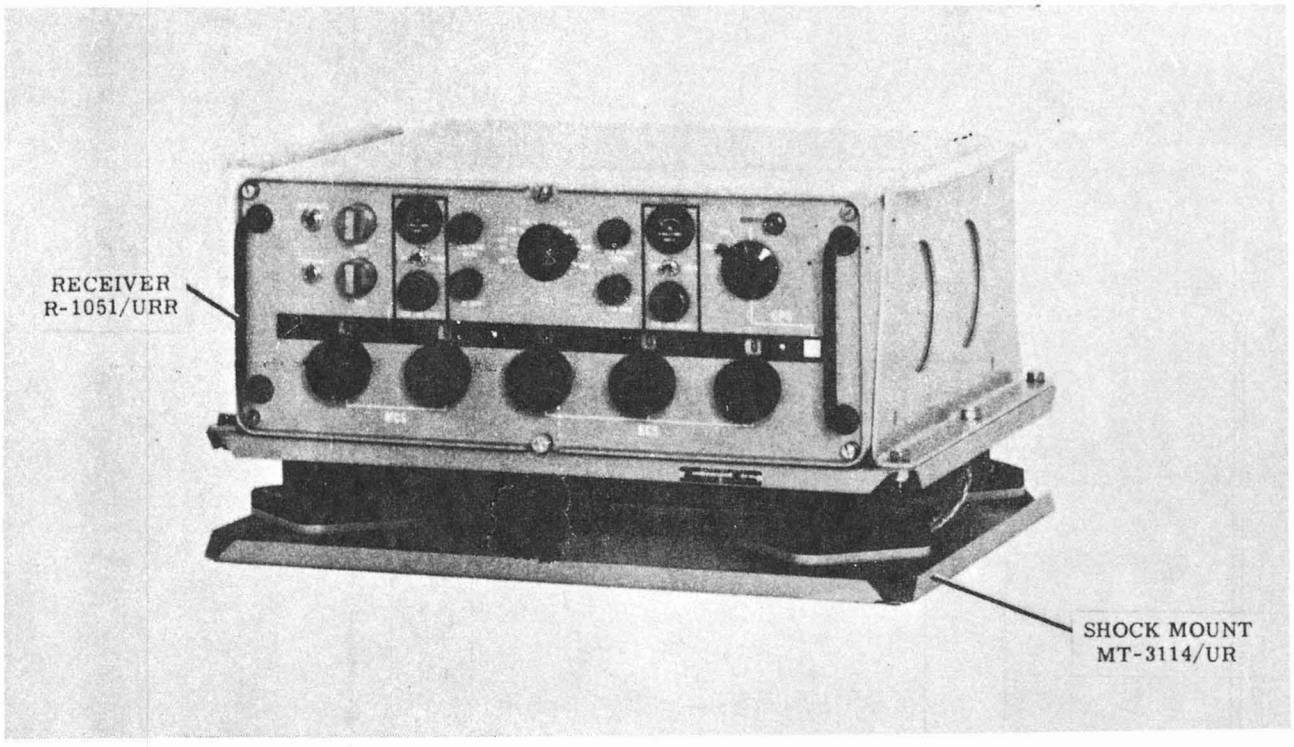

Figure 2-3. Radio Receiver R-1051/URR, Installation Diagram

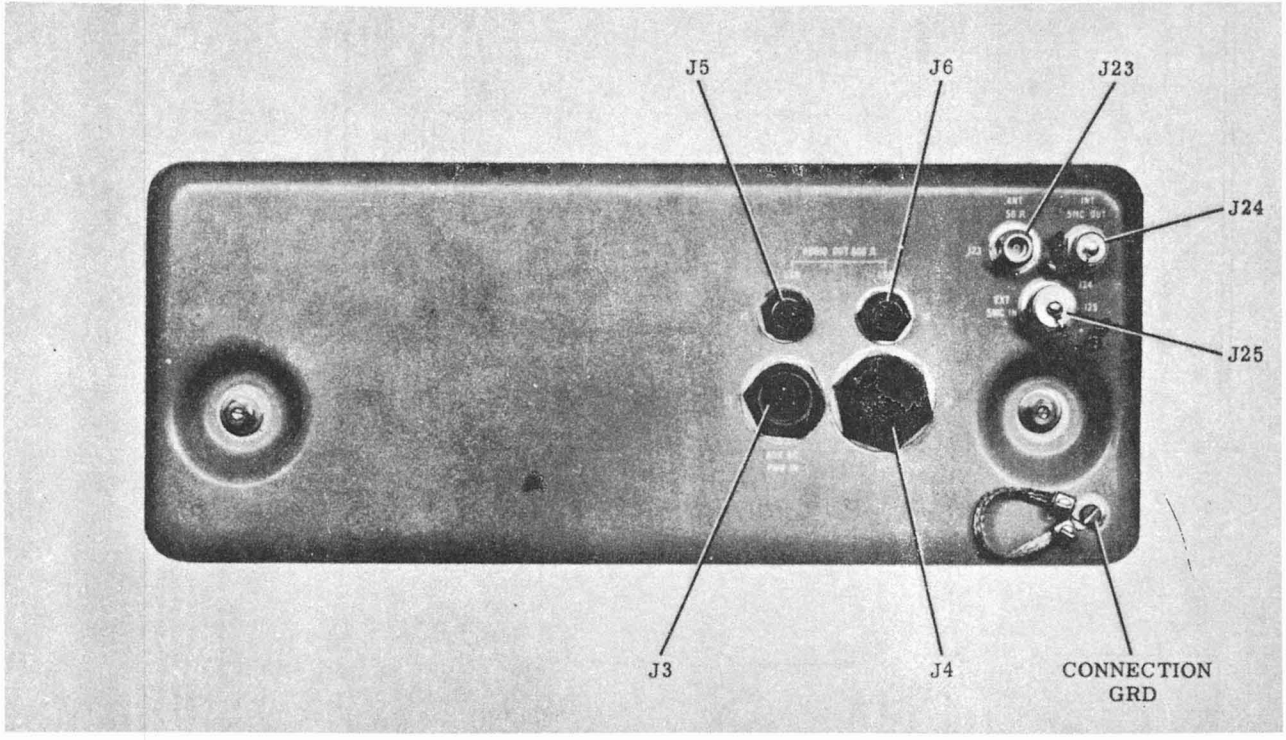

Figure 2-4. Radio Receiver R-1051/URR, Rear View

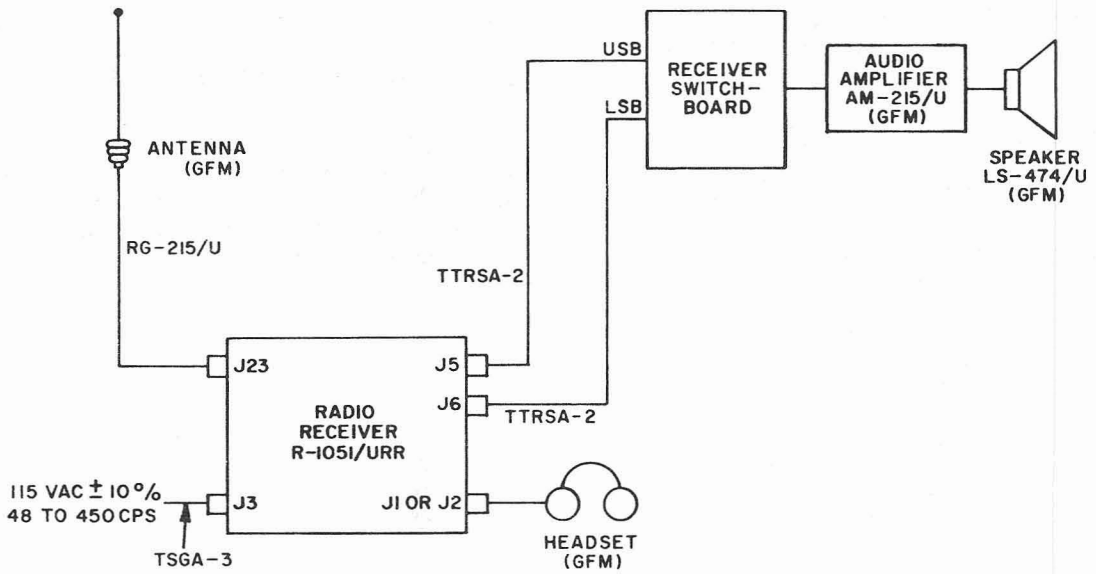

Figure 2-5. Radio Receiver R-1051/URR, Typical Interconnection Diagram

a. Ensure that connector J23 (ANT 50 Ω) on the rear of the R-1051/URR is connected to an antenna different from the one connected to the antenna coupler.

b. Loosen the front panel screws and slide the R-1051/URR chassis out from the case.

c. Set switch S9 (SIMPLEX/DUPLEX) at DUPLEX. This switch is located just behind the front panel on the left.

d. Slide the chassis back into the case and secure it.

2-24. The audio transformer in the R-1051/URR (located in the Receiver IF./Audio Electronic Assemblies) do not have grounded center taps as supplied. If it is required that these transformers work into a balanced circ- center tap grounded circuit, proceed as follows:

CAUTION

Do not ground center taps if working into an unbalanced circuit.

a. Loosen front panel screws and slide chassis out from the case.

b. Tilt chassis up 90 degrees to expose bottom. Refer to figure 5-16 and locate J18 and J19.

c. Refer to figure 5-1 and perform the steps outlined in Note 3 on that schematic.

d. Tilt the chassis back to horizontal, release slide locks, slide chassis back into case and secure it.

2-25. INSPECTION AND ADJUSTMENT.

2-26. INSPECTION. Because of the design and construction of the R-1051/URR, relocation should have little or no effect on adjustment. Since the R-1051/URR is in an operational condition when packed, inspect for the following before applying power:

a. External damage to indicators, switches, lamps, and connectors.

b. Verify that tubes V1 and V2 in RF Amplifier Electronic Assembly A2A4 are secure in their respective sockets.

2-27. ADJUSTMENT. After installation, refer to Maintenance Standards Book NAVSHIPS 94841. 42(A) and use the procedures therein outlined to check out the R-1051/URR. Before

applying power, ensure that all cables are properly connected and that all fuses are in place. Also, ensure that the following switches are in the proper positions, according to the type of operation required:

a. S9 (SIMPLEX/DUPLEX).

b. S7 (AUX/NORM).

c. A5S1 (COMP/INT/EXT).

2-28. PERFORMANCE CHECKS. Refer to Section 3 and perform the applicable operating procedures to ensure proper installation.

2-29. INTERFERENCE REDUCTION.

2-30. As a precaution against possible interference, operate the R-1051/URR with drawer fully closed and with front panel mounting screws tightened. Verify that the R-1051/URR is properly grounded.

SECTION 3

OPERATION

Note

This section is bound as volume II. Refer to volume II, Operator's Handbook, for Radio Receiver R-1051/URR, NAVSHIPS 94841(A), for operation of this equipment.

SECTION 4

TROUBLE SHOOTING

4-1. LOGICAL TROUBLE SHOOTING.

4-2. The following six logical steps should be followed when trouble shooting Radio Receiver R-1051/URR (R-1051/URR).

4-3. SYMPTOM RECOGNITION.

4-4. Symptom recognition is the first step in the trouble-shooting procedure and is based on a complete knowledge and understanding of equipment operating characteristics. All equipment troubles are not the direct result of component failure. Therefore, a trouble in an equipment is not always easy to recognize since all conditions of less than peak performance are not always apparent. This type of equipment trouble is usually discovered while accomplishing preventive maintenance procedures, such as the POMSEE checks. It is important that the "not so apparent" troubles, as well as the apparent troubles, be recognized.

4-5. SYMPTOM ELABORATION.

4-6. After an equipment trouble has been "recognized", all the available aids designed into the equipment should be used to further elaborate on the original trouble symptom. Use of front panel controls and other built-in indicating or testing aids should provide better identification of the original trouble symptom. Also, checking or otherwise manipulating the operating controls may eliminate the trouble.

4-7. LISTING PROBABLE FAULTY FUNCTION.

4-8. The next step in logical trouble shooting is to formulate a number of "logical choices" as to the cause and likely location (functional section) of the trouble. The "logical choices" are decisions based on knowledge of the equipment operation, a full identification of the trouble symptom, and information contained in this manual. The overall functional description and associated block diagram should be referred to when selecting possible faulty functional sections.

4-9. LOCALIZING THE FAULTY FUNCTION.

4-10. For the greatest efficiency in localizing trouble, the functional sections which have been selected by the "logical choice" method should be tested in an order that will require the least time. This requires a selection to determine which section to test first. The selection should be based on the validity of the "logical choice" and the difficulties in making the necessary tests. If the tests do not prove one functional section to be at fault, the next selection should be tested, and so on until the faulty functional section is located. As aids in this process, this manual contains a functional description and an over-all block diagram of each functional section. Waveforms (or other pertinent indications) are included at significant check points on servicing block diagrams to aid in isolating the faulty section. Also, test data (such as information on control settings, critical adjustments, and required test equipment) are supplied to augment the functional description and servicing block diagram for each functional section.

4-11. LOCALIZING TROUBLE TO THE CIRCUIT.

4-12. After the faulty functional section has been isolated, it is often necessary to make additional "logical choices" as to which group of circuits or circuit (within the functional section) is at fault. Servicing block diagrams for each functional section and individual functional circuit groups (where required) provide the signal flow and test location information needed to bracket and then isolate the faulty circuit. Functional descriptions, simplified schematics, and pertinent test data for individual circuits or groups of circuits comprising the functional section are placed together in one area of the manual. Insofar as is practicable, this information is contained on facing pages. Information that is too lengthy in nature to be included in this arrangement is readily referenced from the test data portion of the trouble-shooting information.

4-13. FAILURE ANALYSIS.

4-14. After the trouble (faulty component, misalignment, etc.) has been located (but prior to performing corrective action), the procedures followed up to this point should be reviewed to determine exactly why the fault affected the equipment in the manner it did. This review is usually necessary to make certain that the fault discovered is actually the cause of the malfunction, and not just the result of the malfunction.

4-15. RADIO RECEIVER R-1051/URR, FUNCTIONAL DESCRIPTION.

4-16. Radio Receiver R-1051/URR is a triple-conversion superheterodyne receiver, tunable over the high frequency range from 2 to 30-mc. Tuning of the R-1051/URR is accomplished digitally by five controls (MCS and KCS) and a switch (CPS) located on the front panel. A display window directly above each control provides a digital readout of the digits to which the controls are set. The displayed frequency can be changed in 1 kc increments. The front panel switch allows the operating frequency to be changed in 500-cps increments. This tuning provides 56,000 discrete frequencies in which the receiver is locked to a very accurate frequency standard. Each 1-kc increment can be continuously tuned through by selecting the VERNIER position of the CPS switch. When using the vernier, the full accuracy of the frequency standard is sacrificed. The R-1051/URR demodulates and provides audio outputs for the following types of received signals: LSB, USB, ISB, CW, FSK, and AM. Over the frequency range, the input sensitivity for an audio output signal-plus-noise to noise ratio of 10 db is better than 1 microvolt for ISB, LSB, USB, and FSK, 2 microvolts for CW, and 4 microvolts for AM. Figure 4-1 illustrates the functional groups of circuits comprising the electronic assemblies and subassemblies of the R-1051/URR.

4-17. MAIN SIGNAL FLOW.

4-18. A received signal from the antenna passes through closed relay contacts in the antenna overload circuit to the rf amplifiers. Should a signal in excess of 15 volts appear at the receiver input, the antenna overload circuit will open the relay contacts. The excessive voltage is thereby prevented from being applied to the rf amplifiers, which form a part of RF Amplifier Electronic Assembly A2A4. Within the rf amplifiers, the signal passes through a double-tuned input circuit, two rf amplifier stages, a single-tuned interstage circuit, and output circuits. All of the resonant tuned circuits are tuned by the MCS, 100 kc (KCS), and 10 kc (KCS) frequency controls on the front panel. The MCS controls operate a code generator, which activates a motor-driven turret containing 28 strips. Each strip contains a tuned transformer and a portion of the capacitance required by each of the four tuned circuits. For each megacycle increment, a different tuned transformer and capacitor are switched into place. The remaining tuned circuit capacitance is mechanically switched into the four tuned circuits by the 100 kc (KCS) and 10 kc (KCS) controls on the front panel. These capacitors are located on circular boards stacked in the center of the turret. The tuned circuits provide the frequency selectivity required to prevent undesired off-channel signals from distorting the desired signal by cross-modulating or overloading the rf amplifier stages. The gain of the rf amplifier stages ensures that the weak-signal sensitivity of the R-1051/URR is maintained. The gain of both rf amplifier stages is controlled by the application of an agc voltage from the step agc circuit.

4-19. The output from the rf amplifiers is applied to the mixers, which form a part of RF Translator Electronic Subassembly A2A6A6 located in Translator/Synthesizer Electronic Assembly A2A6. The mixers consist of three transistor mixer stages, with interstage coupling provided by selective filters. The first mixer receives the injection frequencies from MC Synthesizer Subassembly A2A6A1. The injection frequency is determined by the megacycle band selected by the MCS controls on the front panel. The desired output frequency from the first mixer always falls within two frequency bands, either 19.5 to 20.5 mc or 29.5 to 30.5 mc. The high or low band is also determined by the megacycle band to which the R-1051/URR is tuned. The output from the first mixer is gated through the appropriate 20 or 30-mc filter. This signal is mixed in the second mixer stage with the injection frequencies supplied from 100 KC Synthesizer Electronic Subassembly A2A6A2. The desired frequency band from the second mixer is 2.8 to 2.9 mc. This signal is coupled through a 2.85 mc filter to the third mixer. The injection frequencies for the third mixer are supplied from 1 and 10 KC Synthesizer Electronic Subassembly A2A6A3. The output from the third mixer is a 500-kc if. signal. (Refer to paragraph 4-37.)

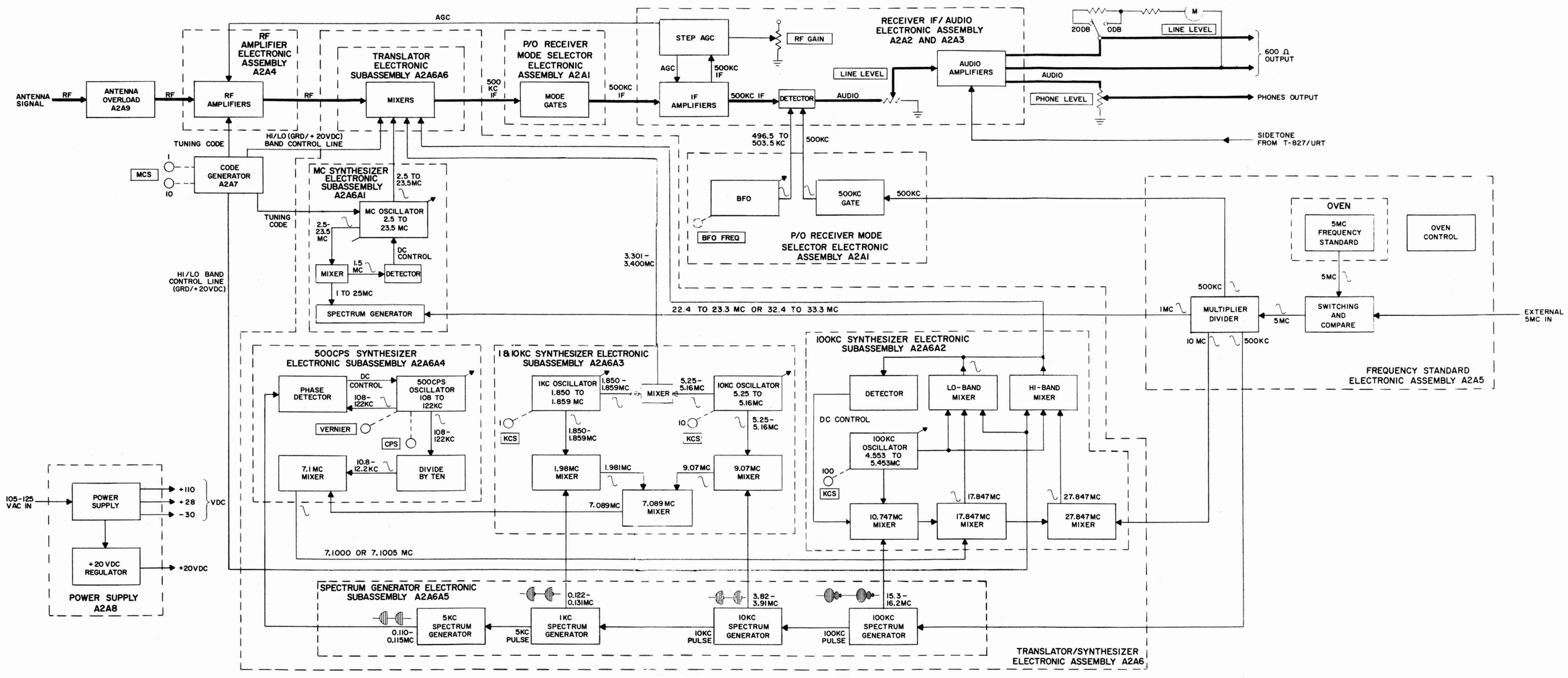

CAUTION

When making resistance checks at semi-conductor devices, use only the higher scales of the multimeter so as to avoid unintentional damage to the semi-conductor device due to the meters internal voltage.

Figure 4-1. Radio Receiver R-1051/URR, Functional Block Diagram

Signal flow from the antenna input through the output of the third mixer is identical, regardless of the selected mode of operation.

4-20. The 500-kc if. output from the third mixer is applied to the mode gates. Three parallel paths are presented to the signal. The path that passes through the LSB mechanical filter (also used in ISB) is not gated since it has an independent output from the Mode Selector Electronic Assembly. Because the outputs from the USB mechanical filter (also used in FSK and ISB) and the AM mechanical filter (also used in CW) are paralleled for a common output, the input paths to these two filters must be gated so that only one path is open at any given time. Application of the correct gating potentials is determined by the mode of operation selected at the front panel.

4-21. The output from the LSB filter is applied to the if. amplifiers in IF. Audio Amplifier Electronic Assembly A2A3. The common output of the USB and AM filters is also applied to the if. amplifiers in IF./Audio Electronic Assembly A2A2. The operating dc voltage is applied to the proper electronic assembly according to the mode of operation selected at the front panel. In the ISB mode of operation, a dc operating voltage is applied to both if. amplifiers. Agc voltage from the step agc circuit controls the overall gain of the if. amplifiers by varying the attenuation of the input and the gain of the second if. amplifier stage. The input to the step agc circuit is derived from the output from the second if. amplifier stage.

4-22. The output from the if. amplifiers is applied to the detector circuits, consisting of a product detector and an AM detector. Depending on the mode of operation selected at the front panel, either the balanced product detector or the AM detector is powered by dc operating voltage. The product detector demodulates the USB, LSB, FSK, and ISB signals. In these modes of operation, a 500-kc injection, originating at a multiplier-divider in Frequency Standard Electronic Assembly A2A5, is applied to the product detector for carrier re-insertion. This 500-kc injection passes through the 500-kc gate in Mode Selector Electronic Assembly A2A1 with little attenuation in these modes of operation. In AM and CW modes, this gate presents a high attenuation, since no carrier re-insertion is required by the AM detector. In the CW mode of operation, the BFO assembly in Mode Selector Electronic Assembly A2A1 is turned on, and a variable 500-kc output is applied to the input of the AM detector in assembly A2A2. The output frequency from the BFO circuit is controlled by the BFO FREQ. control on the front panel.

4-23. The audio derived from the detector circuits in assembly A2A2 is applied to the USB LINE LEVEL control on the front panel which controls the audio level prior to its application to the audio amplifiers. The LSB LINE LEVEL control sets the audio level from the product detector in assembly A2A3. Each Receiver IF./Audio Amplifier Electronic Assembly has two outputs. One is a 600-ohm remote output, which is applied to a connector at the rear of the case. The second output is to the PHONES jacks on the front panel. The PHONES output passes through a PHONE LEVEL control on the front panel, which adjusts the phone signal amplitude without altering the level of the remote output. Each remote output is monitored at the front panel by a LINE LEVEL meter, which has two scale ranges controlled by the LINE LEVEL switch on the front panel.

4-24. STEP AGC SIGNAL FLOW.

4-25. The step agc circuit, which forms a part of the Receiver IF./Audio Amplifier Electronic Assemblies A2A2 and A2A3, controls the gain of the rf amplifiers and if. amplifiers according to the received rf signal strength. The output from the if. amplifiers is applied to the step agc circuits, where it is converted to a dc voltage that is applied to both the rf and if. amplifiers. The gain of the rf and if. amplifiers may be manually controlled by applying a dc voltage on the agc lines with the RF GAIN control. This manual action over-rides the normal agc voltages.

4-26. FREQUENCY STANDARD.

4-27. The 5-mc frequency standard produces an accurate, stable reference frequency upon which all frequencies used in the R-1051/URR are based. The circuit is housed in an oven assembly maintained at a nearly constant temperature of 85°C by the oven control circuit. The accurate output from the 5 mc frequency standard is applied to a switching and compare circuit. An external 5-mc frequency may also be applied to this circuit. The switching and compare circuit routes the internal or external 5-mc signal to the multiplier-divider circuits or to the compare circuit. The compare circuit compares the internal 5-mc frequency with the external 5-mc frequency for an indication

of the accuracy of the internal frequency standard. The 5-mc output from the switching and compare circuit is applied to the multiplier-divider circuit, where it is converted to frequencies of 500 kc, 1 mc, and 10 mc. These three outputs are used in the mixing processes required to produce the injection frequencies used in the rf conversion process. The 500-kc output is also applied to the 500-kc gate circuit for insertion into the product detector for demodulation. The 5 mc frequency standard, oven control, multiplier-divider, and switching and compare circuits comprise Frequency Standard Electronic Assembly A2A5.

4-28. FREQUENCY GENERATION.

4-29. The injection frequencies used in the first frequency conversion in the mixers circuit are generated within the Mc Synthesizer Electronic Subassembly A2A6A1. This circuit consists of a phase-locked crystal oscillator that is automatically tuned to produce one of seventeen frequencies between 2. 5 mc and 23. 5 mc. The output is applied to the high frequency mixer. The output frequency depends on the setting of the front panel MCS controls.

4-30. The injection frequencies used in the second frequency conversion in the mixers circuit are generated within the 100 KC Synthesizer Electronic Subassembly A2A6A2. This circuit consists of a crystal oscillator, the output from which is one of ten frequencies spaced at 100 kc intervals between 4. 553 and 5. 453 mc. The output frequency is determined by the setting of the front panel 100 kc (KCS) control. If a lo-band injection frequency is required (see paragraph 4-37) the 17. 847 mc output from the 17. 847 mc mixer is additively mixed in the lo-band mixer with the output from the 100 kc oscillator (4. 553 mc to 5. 453 mc, in 100 kc steps) to provide a frequency in the 22. 4 to 23. 3 mc range. If a hi-band injection frequency is required (see paragraph 4-37) the 27. 847 mc output from the 27. 847 mc mixer is additively mixed in the hi-band mixer with the output from the 100 kc oscillator (4. 553 mc to 5. 453 mc, in 100 kc steps) to provide a frequency in the 32. 4 to 33. 3 mc range. In either case, the resultant frequency is applied to the mid frequency mixer.

4-31. The injection frequencies used in the third frequency conversion in the mixers circuit are generated within the 1 and 10 KC Synthesizer Electronic Subassembly A2A6A3. This circuit consists of two crystal oscillators, each of which has ten possible output frequencies. The output from the 1 kc oscillator (1. 850 mc to 1. 859 mc, in 1 kc steps) is determined by the setting of the front panel 1 kc (KCS) control, and the output from the 10 kc oscillator (5. 25 mc to 5. 16 mc, in 10 kc steps) is determined by the setting of the front panel 10 kc (KCS) control. The outputs from the two oscillators are subtractively mixed to provide one of 100 possible output frequencies spaced at 1 kc intervals between 3. 301 mc and 3. 400 mc. The output is applied to the low frequency mixer.

4-32. ERROR CANCELLATION.

4-33. A combination of error cancelling loops and phase-locked loops is used in the frequency synthesizer circuits of the R-1051/URR to ensure that the injection frequencies applied to the mixers are correct. The MC Synthesizer Electronic Subassembly (A2A6A1) employs a phase-locked loop to ensure the accuracy of the mc injection frequencies. The 1 mc output from the multiplier-divider in the Frequency Standard Electronic Assembly (A2A5) is applied to the spectrum generator to produce a spectrum of frequencies spaced at 1 mc intervals between 1 mc and 25 mc. The output from the spectrum generator and the output from the mc oscillator are mixed. Any error in output from the mc oscillator is detected and an error voltage is produced. This error signal is applied to the mc oscillator to lock it to the correct frequency. The accuracy of the oscillator output is the same as that of the 5-mc frequency standard.

4-34. The 100 KC Synthesizer Electronic Subassembly (A2A6A2) employs an error cancelling loop to ensure the accuracy of the 100 kc injection frequencies. The 500 kc output from the multiplier-divider is applied to the 100 kc spectrum generator to produce a spectrum of frequencies spaced at 100 kc intervals between 15. 3 mc and 16. 2 mc. The output from the 100 kc oscillator (4. 553 mc to 5. 453 mc, in 100 kc steps) is applied to the 10. 747 mc mixer, where it is mixed with that spectrum point of the 100 kc spectrum which will result in an output of 10. 747 mc. The 10. 747 mc signal is additively mixed with the 7. 1 mc output from the 7. 1 mc mixer to produce the 17. 847 mc signal, which is used in one of two mixing processes. It is mixed with the 100 kc oscillator output to cancel any oscillator frequency error and produce the lo-band injection frequencies, or it is mixed with the 10 mc output from the

multiplier-divider. This mixing produces a 27.847 mc signal, which is mixed with the 100 kc oscillator output to cancel any oscillator frequency error and produce the hi-band injection frequencies. The hi or lo band of injection frequencies is determined by the voltage level on the hi/lo band control line output from the code generator. If an error were present in the 100 kc oscillator output, it would be cancelled in this mixing scheme. This is accomplished as follows. Assume that the output from the oscillator should be 4.553 mc, but is 200 cycles high (4.5532 mc), and that the desired frequency output is 22.4 mc (in the lo band). The subtractive mixing of the oscillator output with whichever 100 kc spectrum point will produce an output as close as possible to 10.747 mc, results in a 10.7468 mc output (15.3 mc - 4.5532 mc = 10.7468 mc). This signal is then additively mixed with the 7.1 mc signal, producing a 17.8468 mc output. The 17.8468 mc signal is then additively mixed with the oscillator output (17.8468 mc + 4.5532 mc = 22.4 mc), resulting in the desired 22.4 mc output. Assume that the output from the oscillator should be 4.953 mc, but is 300 cycles low (4.9527 mc), and that the desired frequency output should be 32.8 mc (in the hi-band). Subtractively mixing the 100 kc spectrum point (15.7 mc) with the 4.9527 mc signal results in an output of 10.7473 mc. This signal is then mixed with the 7.1 mc signal, resulting in a frequency of 17.8473 mc. The 17.8473 mc signal is further mixed with the 10 mc signal to obtain a frequency of 27.8473 mc, which is additively mixed with the 4.9527 mc output from the oscillator to obtain the required 32.8 mc output. Therefore, it can be seen that any error existing in the output from the 100 kc oscillator will be cancelled, resulting in the exact 100 kc injection frequency required.

4-35. Any error existing in the 1 and 10 kc oscillators is cancelled in the following manner. The 100 kc pulses from the 100 kc spectrum generator are applied to the 10 kc spectrum generator producing an output from 3.82 to 3.91 mc in 10 kc increments. The 10 kc spectrum generator also produces 10 kc pulses which are applied to the 1 kc spectrum generator to produce a spectrum of frequencies spaced at 1 kc intervals between 0.122 mc and 0.131 mc. The output from the 10 kc oscillator (5.25 mc to 5.16 mc, in 10 kc steps) is additively mixed with whichever spectrum point of the 10 kc spectrum will result in a frequency of 9.07 mc. The output from the 1 kc oscillator (1.850 mc to 1.859 mc, in 1 kc steps) is additively mixed with whichever spectrum point of the 1 kc spectrum will result in a frequency of 1.981 mc. The 1.981 mc and the 9.07 mc signals are then subtractively mixed, producing the 7.089 mc signal, which contains the errors of both oscillators. The 1 kc spectrum generator also produces 5 kc pulses, which are applied to the 5 kc spectrum generator to produce an output consisting of two spectrum points, 110 kc and 115 kc. These spectrum points are used to lock the output frequency of the 500 cps phase-locked oscillator to 110 kc or 115 kc when desired. With the front panel CPS switch in the 000 position, the output from the phase-locked oscillator is 110 kc and is locked to that exact frequency by the 110 kc spectrum point applied to the phase detector. This 110 kc signal is divided by ten and applied to the 7.1 mc mixer, where it is additively mixed with the 7.089 mc output from the 7.089 mc mixer. The resulting 7.1 mc signal is then applied to the error loop of the 100 KC Synthesizer Electronic Subassembly (A2A6A2). Therefore, if an error exists in the 1 or 10 kc oscillators, the same error will exist in the 100 kc injection frequencies. This error is then cancelled in the low and mid frequency mixers of the mixers circuit in the following manner. Assume that the output from the 10 kc oscillator should be 5.25 mc, but is actually 5.2502. Also assume that the output from the 1 kc oscillator should be 1.852 mc but is actually 1.8521 mc. Subtractively mixing these two frequencies results in an injection frequency to the low frequency mixer of 3.3981 mc, rather than the desired 3.3980 mc. Therefore, a 100 cycle error exists in the injection signal. The additive mixing of the 5.2502 mc signal and the 10 kc spectrum point (3.82 mc) results in a frequency of 9.0702 mc. The additive mixing of the 1.8521 mc signal and the 1 kc spectrum point (0.129 mc) results in a frequency of 1.9811 mc. Subtractively mixing the 9.0702 mc and the 1.9811 mc signals results in a frequency of 7.0891 mc. The 7.0891 mc signal is mixed with the 11 kc signal from the divide-by-ten-circuit resulting in a frequency of 7.1001 mc, which is mixed with the 10.747 mc signal to produce a frequency of 17.8471 mc. If the output from the 100 kc oscillator is assumed to be 4.553 mc, then the 100 kc injection frequency would be 22.4001 mc. The 100 kc injection is then also 100 cycles high. Therefore, when the 1 and 10 kc injection frequency of 3.3981 mc (which is 100 cycles high) is subtractively mixed in the low frequency mixer with the out-

put from the mid frequency mixer (which is 100 cycles high), the error will be cancelled. Therefore, since any error that existed in the 1 and 10 kc injection also exists in the 100 kc injection, the error is cancelled during the translation process.

4-36. The R-1051/URR can be tuned to 0.5-kc increments using the 000 and the 500 positions of the CPS switch as well as any frequency in-between, using the VERNIER position of the CPS switch and the VERNIER control, both located on the front panel. When the CPS switch is in the 000 position, the phase-locked oscillator output in the 500 cps oscillator circuit is locked to 110 kc. Therefore, when the 11.0-kc signal (after division by ten) is mixed with the 7.089-mc error frequency, a frequency of 7.1000 mc is obtained. When the CPS switch is in the 500 position, the output from the phase-locked oscillator is locked to 115 kc. Therefore, when the 11.5 kc (after division by ten) is mixed with the 7.089 mc error frequency, a frequency of 7.1005 mc is obtained. Therefore, the 100-kc injection frequency will be 500 cps greater. Thus, the output from the mid frequency mixer may be varied in 500 cps increments. When the CPS switch is in the vernier position, the output from the phase-locked oscillator can be varied between 108 and 122 kc. As a result, the 7.1000 mc error frequency can be varied between 7.0998 and 7.1012 mc. Thus, the output from the mid-frequency may be varied continuously between any two 1 kc increments.

4-37. The rf signal from the antenna is converted to the 500-kc if. as follows: Assume that the front panel controls are set for a frequency of 13,492,500 cps (figure 4-2 for the frequency translation of the R-1051/URR). The 1-mc injection corresponding to the selected mc digits (13) is 16.5 mc in the hi-band. The 16.5-mc is additively mixed in the high frequency mixer with 13,492,500 cps producing 29,992,500 cps which is filtered and applied to the mid frequency mixer. Since the mc digits (13) are in the hi-band and the CPS switch is in the 500 position, the 100-kc injection frequency corresponding to the 100-kc digit (4) will be 32.8005 mc, as shown in figure 4-2. The mid frequency mixer subtractively mixes the 29,992,500 cps and the 32.8005 mc thereby producing a frequency of 2,808,000 cps, which is filtered and applied to the low frequency mixer. The 1- and 10-kc injection is that frequency of the 10 kc oscillator corresponding to the 10-kc digit (9) minus that frequency of the 1 kc oscillator corresponding to the 1-kc digit (2). As shown on figure 4-2, this results in an injection frequency (5.16 mc minus 1.852 mc) of 3.308 mc. The 3.308 mc is subtractively mixed with the 2,808,000 cps producing the 500-kc if. Similarly, any frequency between 2 and 30 mc may be translated into the 500-kc if.

4-38. POWER SUPPLIES.

4-39. The operating voltages for all circuits in the R-1051/URR are produced by Power Supply Electronic Assembly A2A8. The 105 to 125-vac primary power is converted to dc voltages of 110 volts (rf amplifier tubes plate and screen supply) -30 volts (rf amplifier tubes bias), and 28 volts (general use). The 28 vdc is also regulated to 20 vdc for use in all semiconductor circuits of the R-1051/URR.

4-40. RADIO RECEIVER R-1051/URR, TEST DATA.

4-41. Pertinent references and applicable test data for the R-1051/URR are as follows:

a. Radio Receiver R-1051/URR, Main Frame, Schematic Diagram, Figure 5-1.

b. Radio Receiver R-1051/URR, Servicing Block Diagram, Figure 4-51.

c. Required Test Equipment:

(1) Oscilloscope, AN/USM-105A.

(2) RF Signal Generator, CAQI-606A.

(3) Electronic Multimeter, ME-6( )/U.

(4) Electronic Multimeter, CCVO-91CA.

(5) Multimeter, AN/PSM-4.

(6) Audio Signal Generator, AN/URM-127.

(7) Frequency Meter, CAQI-524D.

(8) Frequency Standard, AN/URQ-9.

(9) Amplifier Test Set, TS-2132/WRC-1.

(10) Translator/Synthesizer, Test Set TS-2133/WRC-1.

(11) Frequency Standard Test Set, TS-2134/WRC-1.

(12) Common Electronic Circuit Test Set, TS-2135/WRC-1.

(13) Heterodyne Voltmeter, Bruel and Kjaer, 2005.

(14) Resistor, 600-ohms, 2-watts.

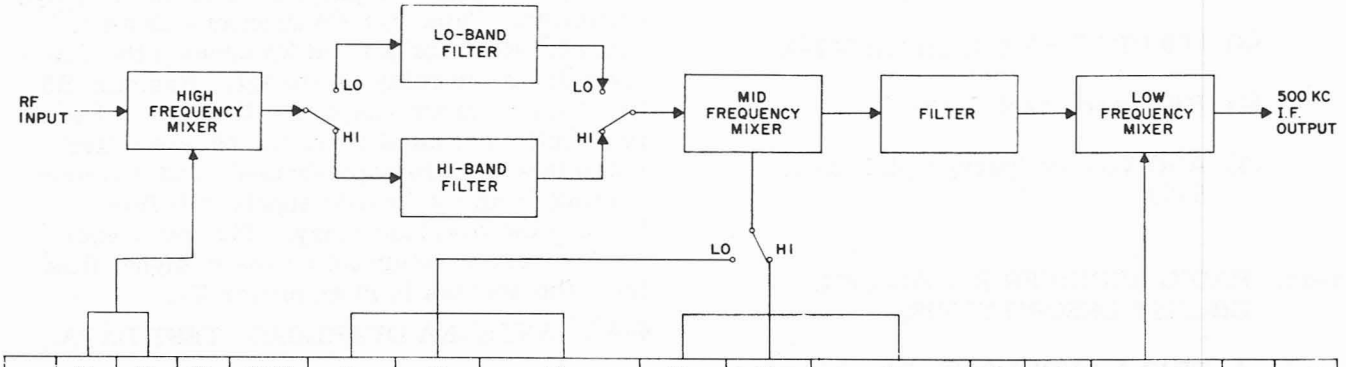

MCS	LO	HI	100 KCS	100 KC OSC	LO 000 CPS	LO 500 CPS	LO VERNIER	HI 000 CPS	HI 500 CPS	HI VERNIER	10 KCS	10 KC OSC	1 and 10 KC INJ.	1 KCS	1 KC OSC
2	17.5		0	4.553	22.4000	22.4005	22.3998 to 22.4012	32.4000	32.4005	32.3998 to 32.4012	0	5.25	3.400 to 3.391	0	1.850
3	16.5		1	4.653	22.5000	22.5005	22.4998 to 22.5012	32.5000	32.5005	32.4998 to 32.5012	1	5.24	3.390 to 3.381	1	1.851
4	15.5		2	4.753	22.6000	22.6005	22.5998 to 22.6012	32.6000	32.6005	32.5998 to 32.6012	2	5.23	3.380 to 3.371	2	1.852
5	14.5		3	4.853	22.7000	22.7005	22.6998 to 22.7012	32.7000	32.7005	32.6998 to 32.7012	3	5.22	3.370 to 3.361	3	1.853
6		23.5	4	4.953	22.8000	22.8005	22.7998 to 22.8012	32.8000	32.8005	32.7998 to 32.8012	4	5.21	3.360 to 3.351	4	1.854
7	12.5		5	5.053	22.9000	22.9000	22.8998 to 22.9012	32.9000	32.9005	32.8998 to 32.9012	5	5.20	3.350 to 3.341	5	1.855
8	11.5		6	5.153	23.0000	23.0005	22.9998 to 23.0012	33.0000	33.0005	32.9998 to 33.0012	6	5.19	3.340 to 3.331	6	1.856
9		20.5	7	5.253	23.1000	23.1005	23.0998 to 23.1012	33.1000	33.1005	33.0998 to 33.1012	7	5.18	3.330 to 3.321	7	1.857
10		19.5	8	5.353	23.2000	23.2005	23.1998 to 23.2012	33.2000	33.2005	33.1998 to 33.2012	8	5.17	3.320 to 3.311	8	1.858
11	8.5		9	5.453	23.3000	23.3005	23.2998 to 23.3012	33.3000	33.3005	33.2998 to 33.3012	9	5.16	3.310 to 3.301	9	1.859
12	7.5														
13		16.5													
14	5.5														
15	4.5														
16	3.5														
17		12.5													
18		11.5													
19		10.5													
20		9.5													
21		8.5													
22	2.5														
23	3.5														
24		5.5													
25		4.5													
26		3.5													
27	7.5														
28	8.5														
29	9.5														

Figure 4-2. Frequency Translation, Functional Block Diagram

d. Power Supply A2A8 voltages:

(1) +19.9 to +20.1 vdc.

(2) +27 to +32 vdc.

(3) -28.5 to -31.5 vdc.

(4) +103 to +117 vdc.

e. Sensitivity: 1 uv for 10 db $\frac{S+N}{N}$ (SSB); 2 uv (CW, FSK); 4 uv (AM)

f. Bandwidth: 3.2 kc (SSB); 7 kc (AM, CW)

g. Adjustments:

(1) 20-volt Regulator (paragraph 5-4).

(2) 5 MC Oscillator (paragraph 5-9).

(3) 500 CPS Lock (paragraph 5-14).

(4) BFO (paragraph 5-19).

(5) AGC Voltage (paragraph 5-24 and 5-29).

4-42. RADIO RECEIVER R-1051/URR, CIRCUIT DESCRIPTIONS.

4-43. ANTENNA OVERLOAD, FUNCTIONAL CIRCUIT DESCRIPTION.

4-44. The antenna overload circuit (figure 4-3) consists of a diode (CR1), a relay driver (Q1), and a relay (K1). This circuit, which forms a part of Receiver Main Frame A2, protects the receiver from high level input signals which could cause damage to the input circuit of RF Amplifier Electronic Assembly A2A4. The following paragraphs describe the operation of this circuit in detail.

4-45. The rf signal from the antenna passes through closed contacts E9 and E5 of overload relay K1 to rf amplifier V1. The rf signal is also coupled through capacitor C1 and applied to voltage divider R1, R2. The signal, which is rectified by diode CR1 and filtered by capacitor Q1, becomes a negative voltage that is applied to the base of relay driver Q1. Capacitor C2 is a frequency compensating capacitor to ensure a more nearly constant voltage at the cathode of detector CR1 over the operating frequency range. Capacitor C3 is an rf bypass capacitor. Capacitor C4 functions as an rf bypass. Resistor R4 and R5 develop the emitter voltage for relay driver Q1. Resistor R3 is the base return resistor. If the dc voltage is of sufficient amplitude, the base-emitter junction will be forward-biased, and collector current from the 28-vdc supply will flow through the overload relay. The relay energizes, thereby interrupting the rf signal flow from the antenna to rf amplifier V1.

4-46. ANTENNA OVERLOAD, TEST DATA.

4-47. Pertinent references and applicable test data for the antenna overload circuit are as follows:

a. Radio Receiver R-1051/URR, Main Frame, Schematic Diagram, Figure 5-1.

b. Required Test Equipment: Multimeter, AN/PSM-4.

c. Antenna Overload, Component Location, Figure 5-21.

4-48. RF AMPLIFIER V1, FUNCTIONAL CIRCUIT DESCRIPTION.

4-49. RF amplifier V1 circuit (figure 4-4), which forms a part of RF Amplifier Electronic Assembly A2A4, amplifies the rf input signal from the antenna for application to rf amplifier V2. The following paragraphs describe the operation of this circuit in detail.

4-50. The signal from the antenna overload circuit passes through contacts 6 and 8 of relay A38K1 and is applied to the primary of trans-

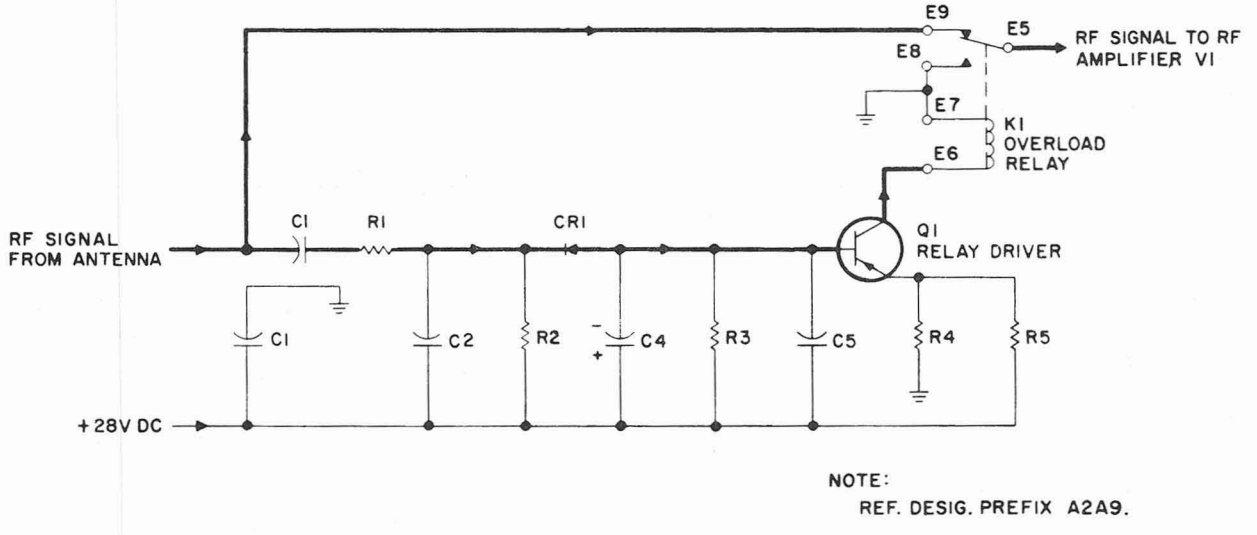

Figure 4-3. Antenna Overload, Simplified Schematic Diagram

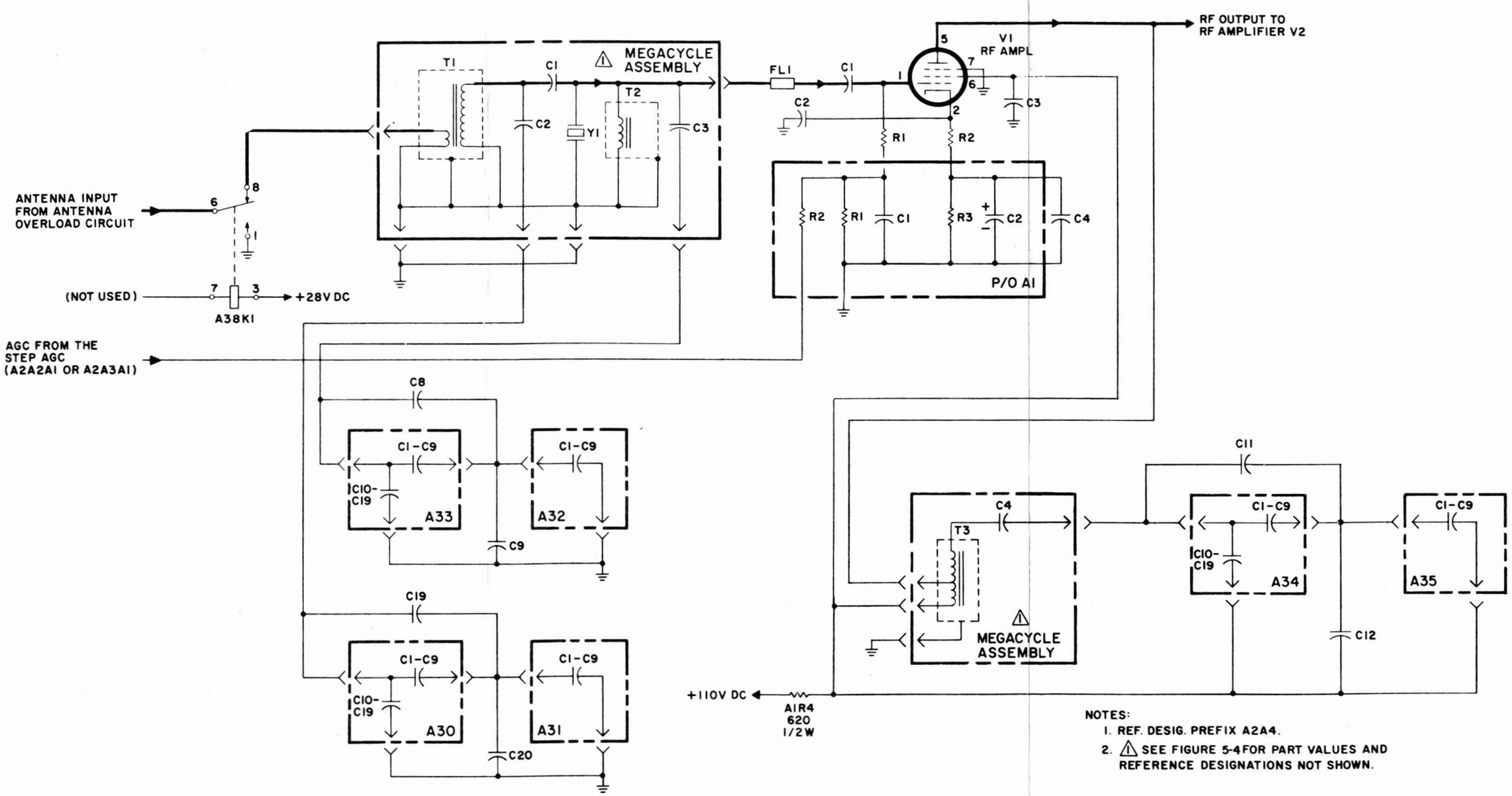

Figure 4-4. RF Amplifier VI, Simplified Schematic Diagram

former T1 in the megacycle assembly. The megacycle assembly is composed of a double-tuned circuit with capacity coupling. The secondary of transformer T1 forms a parallel-tuned circuit with capacitor C2 in series with a capacitance network comprised of capacitors C19, C20 and the capacitors on circuit board assemblies A30 and A31. The signal is coupled from transformer T1 to transformer T2 by capacitor C1. Transformer T2 forms a parallel-tuned circuit with capacitor C3 in series with a capacitance network comprised of capacitors C8, C9 and the capacitors on circuit board assemblies A32 and A33 (crystal Y1 is not used).

4-51. A separate megacycle assembly (A2 through A29) is automatically switched into the circuit for each setting of the MCS controls (2 through 29 mc). The values of the components on these assemblies are shown in chart C on figure 5-4. For each of the ten settings of the 100 kc (KCS) control, different combina tions of capacitors on the A30 and A33 assemblies (C1 through C9 and C10 through C19) are switched into the circuit. The values of these components are shown in chart B on figure 5-4. For each of the ten settings of the 10 kc (KCS) control, different capacitors on the A31 and A32 assemblies (C1 through C9) are switched into the circuit. The values of these components are shown in Chart A on figure 5-4.

4-52. The signal from the megacycle assembly is applied through parasitic suppressor FL1 and coupled by capacitor C1 to the control grid of rf amplifier V1. Screen voltage (110 vdc) for rf amplifier V1 is applied through decoupling resistor A1R4. Plate voltage (110 vdc) for rf amplifier V1 is applied through decoupling resistor A1R4 and transformer T3. The agc for rf amplifier V1 is applied to voltage divider A1R1, A1R2 from step agc circuit in Receiver IF./Audio Amplifier Electronic Assembly A2A2 and/or A2A3. From the voltage divider, the agc is applied through resistor R1 to the control grid of rf amplifier V1 to vary the gain of the stage according to the strength of the received signal. The cathode bias for rf amplifier V1 is developed across resistors R2 and A1R3. Capacitors C2, C3, C4, A2C1, and A2C2 are rf bypass capacitors.

4-53. The output circuit of rf amplifier V1 consists of transformer T3, which forms a parallel-tuned circuit with capacitor C4 in series with a capacitance network comprised of capacitors C11, C12 and the capacitors on circuit board assemblies A34 and A35. The same discussion as in paragraph 4-51 holds true for this tuned circuit except that the 100-kc capacitors are located on the A34 assembly and the 10-kc capacitors are located on the A35 assembly.

4-54. The rf input signal is amplified by rf amplifier V1, for application to rf amplifier V2.

4-55. RF AMPLIFIER V1, TEST DATA.

4-56. Pertinent references and applicable test data for rf amplifier V1 circuit are as follows:

a. Radio Receiver R-1051/URR, Main Frame, Schematic Diagram, Figure 5-1.

b. RF Amplifier Electronic Assembly, Servicing Block Diagram, Figure 4-52.

c. RF Amplifier Electronic Assembly, Schematic Diagram, Figure 5-4.

d. RF Amplifier Bias Circuit Board, Component Location, Figure 5-52.

e. Megacycle Assemblies, Component Location, Figures 5-34 through 5-50.

f. 100 KC Rotor Assemblies, Component Location, Figures 5-55, 5-57, and 5-58.

g. 10 KC Rotor Assemblies, Component Location, Figures 5-56 and 5-59.

h. Required Test Equipment:

(1) RF Signal Generator, CAQI-606A.

(2) Electronic Multimeter, CCVO-91CA.

(3) Amplifier Test Set, TS-2132/WRC-1.

(4) Electronic Multimeter, AN/USM-116.

(5) Multimeter, AN/PSM-4.

i. Refer to paragraph 1-17 in Technical Manual for Repair of AN/WRC-1 and R-1051/URR 2N Modules, NAVSHIPS 95700, for rf amplifier V1 megacycle assembly adjustments.

4-57. RF AMPLIFIER V2, FUNCTIONAL CIRCUIT DESCRIPTION.

4-58. Rf amplifier V2 (figure 4-5), which forms a part of RF Amplifier Electronic Assembly A2A4, amplifies the signal from rf amplifier V1 for application to the high frequency mixer in RF Translator Electronic Subassembly A2A6A6. The following paragraphs describe the operation of this circuit in detail.

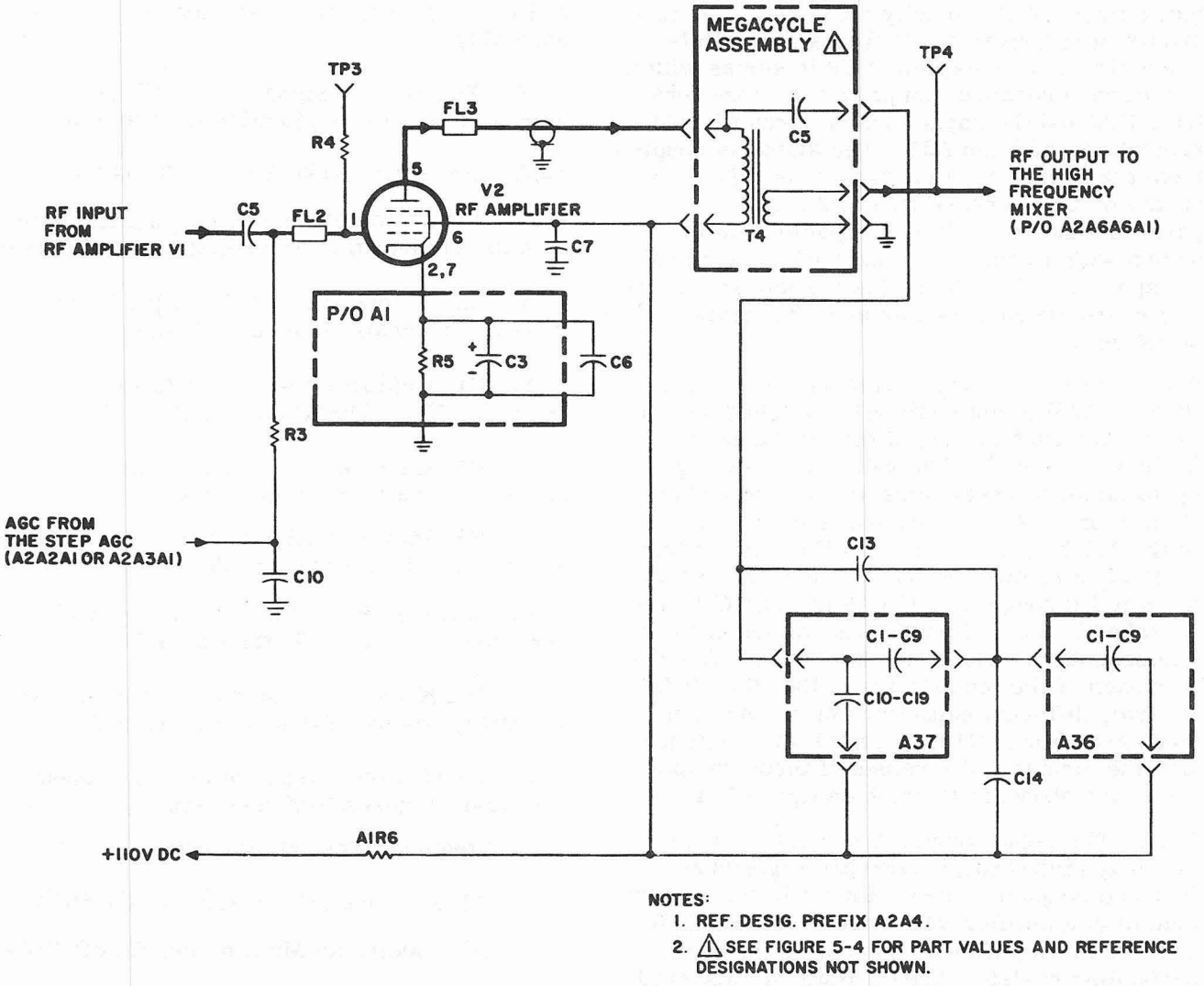

Figure 4-5. RF Amplifier V2, Simplified Schematic Diagram

4-59. The signal from rf amplifier V1 is coupled through capacitor C5 and parasitic suppressor FL2, and is applied to the control grid of rf amplifier V2. Screen voltage (110 vdc) for rf amplifier V2 is applied through decoupling resistor A1R6. Plate voltage (110 vdc) for rf amplifier V2 is applied through decoupling resistor A1R6, the primary rf transformer T4, and parasitic suppressor FL3. Capacitor C7 is an rf bypass capacitor. The agc for rf amplifier V2 is applied to the control grid through resistor R3 from the step agc circuit in Receiver IF./Audio Amplifier Electronic Assembly A2A2 and/or A2A3. The agc varies the gain of the stage according to the strength of the received signal. The cathode bias for rf amplifier V2 is developed across resistor A1R5. The output circuit for rf amplifier V2 consists of transformer T4, which forms a parallel-tuned circuit with capacitor C5 in series with a capacitance network comprised of capacitors C13, C14 and the capacitors on circuit board assemblies A37 and A36. The circuit description in paragraph 4-51 holds true for this tuned circuit except that the 100-kc capacitors are located on the A37 assembly and the 10-kc capacitors are located on the A36 assembly.

4-60. The amplified signal from rf amplifier V2 is applied to the high frequency mixer in RF Translator Electronic Subassembly A2A6A6.

4-61. RF AMPLIFIER V2, TEST DATA.

4-62. Pertinent references and applicable test data for rf amplifier V2 are as follows:

a. Radio Receiver R-1051/URR, Main Frame, Schematic Diagram, Figure 5-1.

b. RF Amplifier Electronic Assembly, Servicing Block Diagram, Figure 5-52.

c. RF Amplifier Electronic Assembly, Schematic Diagram, Figure 5-4.

d. RF Amplifier Bias Circuit Board, Component Location, Figure 5-52.

e. Megacycles Assemblies, Component Location, Figures 5-34 through 5-50.

f. 10 KC Rotor Assembly, Component Location, Figure 5-59.

g. 100 KC Rotor Assembly, Component Location, Figure 5-60.

h. Required Test Equipment:

(1) RF Signal Generator, CAQI-606A.

(2) Electronic Multimeter, CCVO-91CA.

(3) Amplifier Test Set, TS-2132/WRC-1.

(4) Electronic Multimeter, AN/USM-116.

(5) Multimeter, AN/PSM-4.

i. Refer to paragraph 1-17 in Technical Manual for Repair of AN/WRC-1 and R-1051/URR 2N Modules, NAVSHIPS 95700, for rf amplifier V2 megacycle assembly adjustments.

4-63. HIGH FREQUENCY MIXER, FUNCTIONAL CIRCUIT DESCRIPTION.

4-64. The high frequency mixer (figure 4-6) consists of first receiver mixer (Q2) and an emitter follower (Q8). These circuits, which form a part of RF Translator Electronic Subassembly A2A6A6, mix the signal from rf amplifier V2 circuit in RF Amplifier Electronic Assembly A2A4 with the mc injection frequency from the mc oscillator circuit in 1 MC Synthesizer Electronic Subassembly A2A6A1. The following paragraphs describe the operation of this circuit in detail.

4-65. The mc injection signal is coupled through capacitor C21 to the base of emitter follower Q8. The base bias is provided by 20 vdc applied to voltage divider R10, R11, R13. Resistor R55 provides the termination impedance for the mc injection frequencies. Resistor R10 and capacitor C6 provide decoupling for emitter follower Q8. The emitter follower isolates the mc oscillator from first receiver mixer Q2 and provides a low-impedance source for the mixer. The mc injection signal is a frequency in the 2.5 to 23.5-mc range. The output from emitter follower Q8 is developed across resistor R12 and is coupled through capacitor C8 and isolating resistor R8 to the emitter of first receiver mixer Q2. The rf input signal from rf amplifier V2 (2 to 30 mc) is applied to limiters CR9 and CR10, which prevent strong signals from overloading the following stages. Resistor R52 and potentiometer R4 provide the termination impedance for the rf input signal. Potentiometer R4 is adjusted after assembly of the unit and during periodic maintenance to ensure that all units will have the same overall gain. A portion of the signal across potentiometer R4 is coupled through capacitor C5 to the base of first receiver mixer Q2. The base bias is provided by 20 vdc applied to voltage divider R5, R9. Resistor R7 is the emitter resistor. Resistor R6 and capacitor C4 provide decoupling for first receiver mixer Q2. The output circuit for first receiver mixer Q2 consists of 20-mc filter FL1 and 30-mc filter FL2, each of which has a bandwidth of 1 mc. When the hi/lo band control line is at ground potential (as determined by the code generator), diode CR2 is forward-biased by 10 vdc applied through inductor L2, diode CR2, and resistor R49. Diode CR7 is forward-biased by 10 vdc applied through inductor L3, diode CR7, and resistor R50. Therefore, in this condition, the output from first receiver mixer Q2 is coupled through capacitor C10 to 30-mc filter FL2. All mixing products except the required mixing product are rejected in this filter, resulting in a first if. between 29.5 and 30.5 mc. Since diode CR5 is forward-biased, the output from 30-mc filter FL2 is coupled through capacitors C12 and C19 to the mid frequency mixer circuit. Diode CR5 is forward-biased by 10 vdc applied through inductor L3, diode

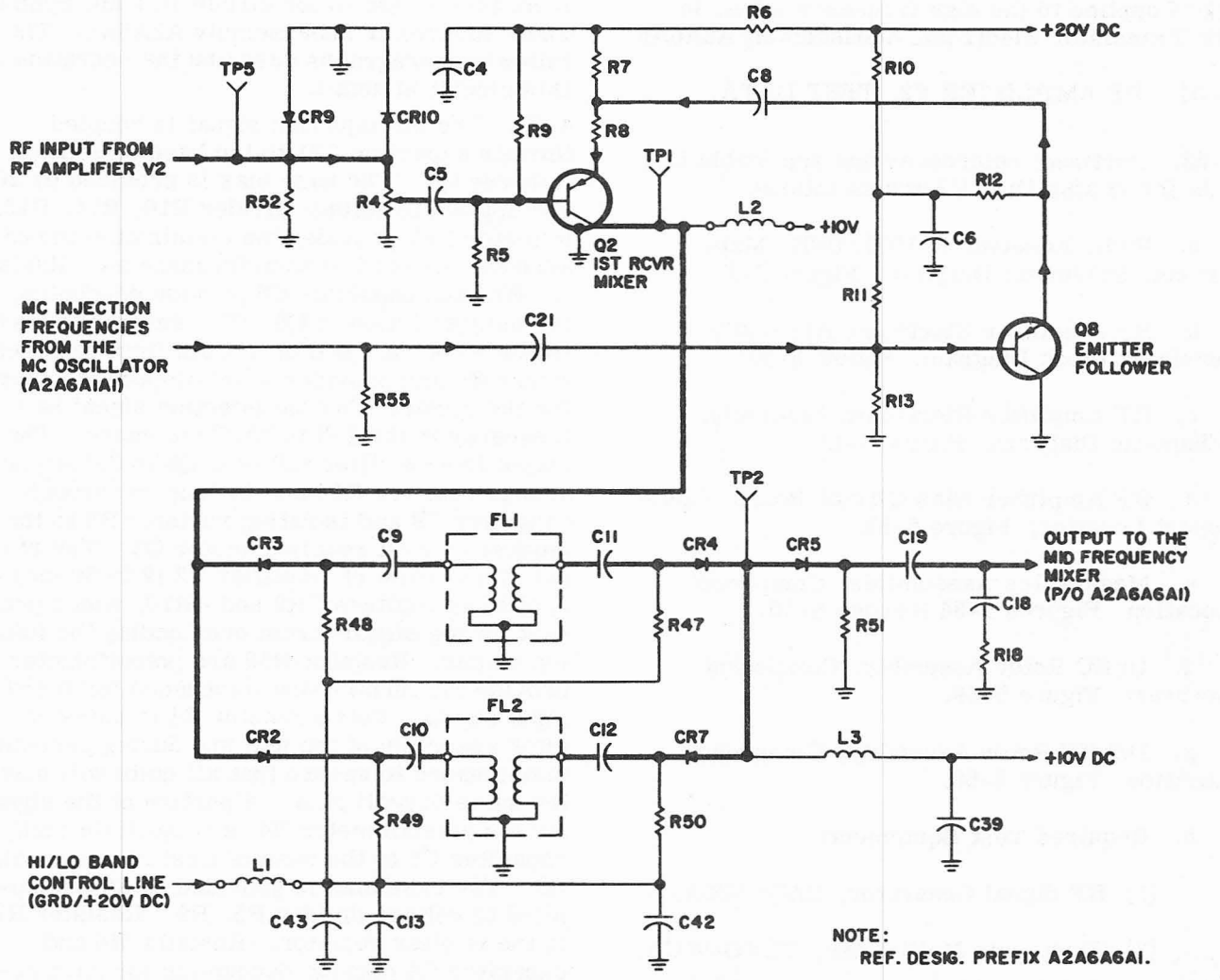

Figure 4-6. High Frequency Mixer, Simplified Schematic Diagram

CR5, and resistor R51. When the hi/lo band control line is at 20 vdc, diodes CR3 and CR4 are forward-biased by 20 vdc applied through inductor L1, and resistors R47 and R48. (The cathode of diode CR3 has 10 vdc applied to it through inductor L2, and the cathode of diode CR4 has 10 vdc applied to it through inductor L3.) Therefore, in this condition, the output from first receiver mixer Q2 is coupled through capacitor C9 to 20-mc filter FL1. All the mixing products except the required mixing product are rejected in this filter, resulting in a first if. between 19.5 and 20.5 mc. Since CR5 is forward-biased, the output from 20-mc filter FL1 is coupled through capacitors C11 and C19 to the mid frequency mixer circuit. Resistor R18 provides the required ac load for filters FL1 and FL2. Capacitor C18 provides d-c isolation for resistor R18.

4-66. HIGH FREQUENCY MIXER, TEST DATA.

4-67. Pertinent references and applicable test data for the high frequency mixer are as follows:

a. Radio Receiver R-1051/URR, Main Frame, Schematic Diagram, Figure 5-1.

b. RF Translator Electronic Subassembly, Servicing Block Diagram, Figure 4-53.

c. RF Translator Electronic Subassembly, Schematic Diagram, Figure 5-11.

d. RF Translator, Component and Test-Point Location, Figure 5-101.

e. Required Test Equipment:

(1) RF Signal Generator, CAQI-606A.

(2) Translator/Synthesizer Test Set TS-2134/WRC-1.

(3) Heterodyne Voltmeter, Bruel and Kjaer, 2005.

(4) Multimeter, AN/PSM-4.

f. Refer to paragraph 3-36 in Technical Manual for Repair of AN/WRC-1 and R-1051/URR 2N Modules, NAVSHIPS 95700, for high frequency mixer adjustment procedures.

4-68. MID FREQUENCY MIXER, FUNCTIONAL CIRCUIT DESCRIPTION.

4-69. The mid frequency mixer (figure 4-7) consists of second receiver mixer (Q3) and an emitter follower (Q9). These circuits, which form a part of RF Translator Electronic Subassembly A2A6A6, mix the first if. signal from the high frequency mixer with the 100 kc injection frequency from the hi-band/lo-band mixer/amplifier circuit in 100 KC Synthesizer Electronic Subassembly A2A6A2 to produce a second if. between 2.8 and 2.9 mc. The following paragraph describes the operation of this circuit in detail.

4-70. The 100 kc injection frequency is coupled through capacitor C23 to the base of emitter follower Q9. The base bias is provided by 20 vdc applied to voltage divider R15, R17. Resistor R53 provides the termination impedance for the 100 kc injection frequencies. Resistor R14 and capacitor C22 provide decoupling for emitter follower Q9. The emitter follower isolates the hi-band/lo-band mixer amplifier circuit from second receiver mixer Q3 and provides a low-impedance source for the emitter circuit of the mixer. The 100 kc injection frequency provides a signal in 100-kc increments between 22.4 and 23.3 mc or between 32.4 and 33.3 mc. The output from emitter follower Q9 is developed across resis-

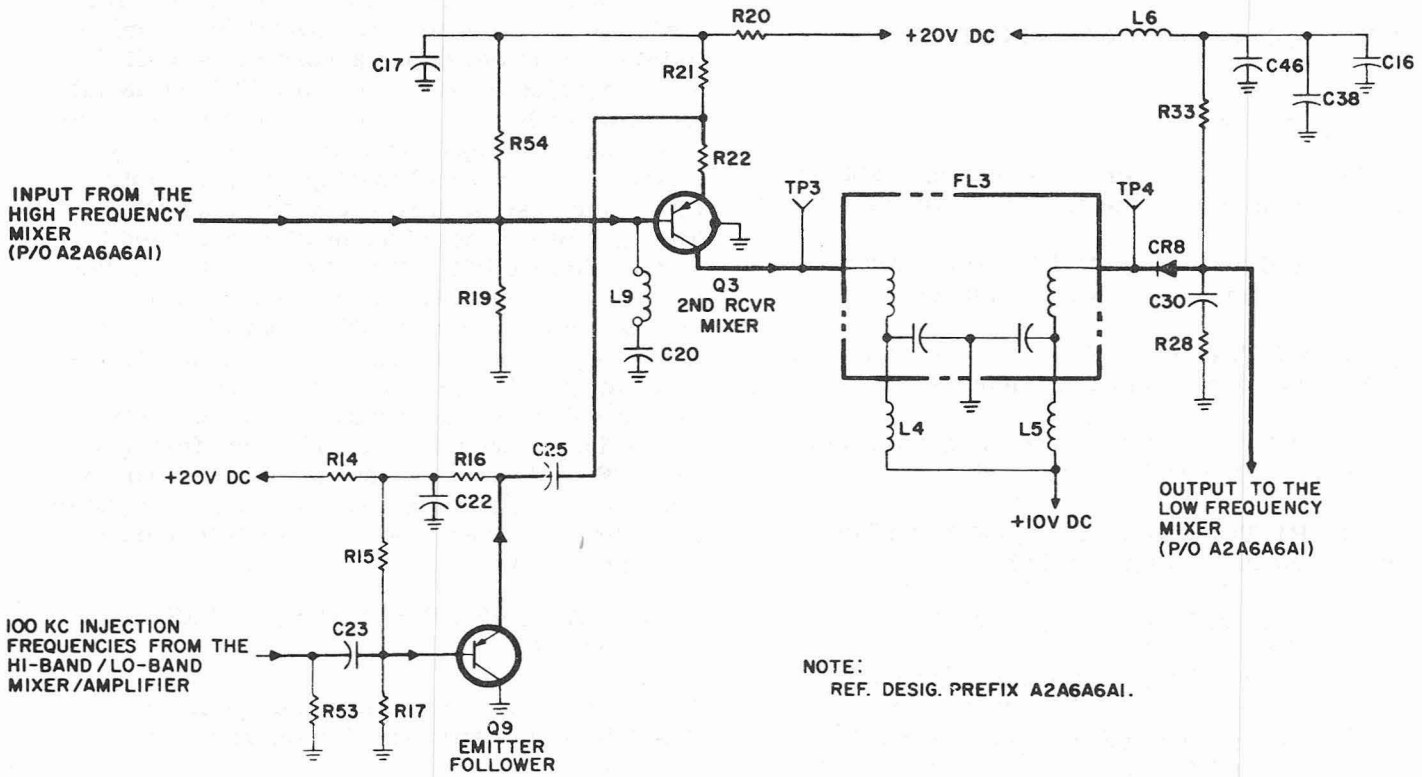

Figure 4-7. Mid Frequency Mixer, Simplified Schematic Diagram

tor R16 and is coupled through capacitor C25 and isolating resistor R22 to the emitter of second receiver mixer Q3. The first if. input from the high frequency mixer (19.5 to 20.5 mc or 29.5 to 30.5 mc) is applied to the base of second receiver mixer Q3. The base bias is provided by 20 vdc applied to voltage divider R54, R19. Resistor R20 and capacitor C17 provide decoupling for second receiver mixer Q3. Inductor L9 and capacitor C20 form a series resonant circuits to eliminate (trap) the second harmonic of the 29.5 to 30.5 mc output from the high frequency mixer. The output circuit of second receiver mixer Q3 consists of filter FL3, which has a bandwidth from 2.8 to 2.9 mc. Therefore, this filter will reject all the products from the mixer except the desired difference frequency. Inductors L4 and L5 decouple the 10 vdc line. Diode CR8 is forward-biased by 20 vdc applied to the anode through inductor L6 and resistor R33 and by 10 vdc applied to the cathode through inductor L5 and filter FL3. Therefore, the output from filter FL3 will pass through diode CR8 to the low frequency mixer. Resistor R28 provides the required ac load for filter FL3. Capacitor C30 provides dc isolation for resistor R28.

4-71. MID FREQUENCY MIXER, TEST DATA.

4-72. Pertinent references and applicable test data for the mid frequency mixer are as follows:

a. Radio Receiver R-1051/URR, Main Frame, Schematic Diagram, Figure 5-1.

b. RF Translator Electronic Subassembly, Servicing Block Diagram, Figure 4-53.

c. RF Translator Electronic Subassembly, Schematic Diagram, Figure 5-11.

d. RF Translator, Component and Test Point Location, Figure 5-101.

e. Required Test Equipment:

(1) RF Signal Generator, CAQI-606A.

(2) Translator/Synthesizer Test Set, TS-2134/WRC-1.

(3) Multimeter, AN/PSM-4.

4-73. LOW FREQUENCY MIXER, FUNCTIONAL CIRCUIT DESCRIPTION.

4-74. The low frequency mixer (figure 4-8) consists of third receiver mixer (Q6) and an emitter follower (Q7). This circuit, which forms a part of RF Translator Electronic Subassembly A2A6A6, mixes the second if. signal from the mid frequency mixer with the 1 and 10 kc injection frequency from the 1 and 10 kc output mixer circuit in 1 and 10 KC Synthesizer Electronic Subassembly A2A6A3, producing a third if. of 500 kc. The following paragraph describes the operation of this circuit in detail.

4-75. The 1 and 10 kc injection frequency is coupled through capacitor C26 to the base of emitter follower Q7. The base bias is provided by 20 vdc applied to voltage divider R23, R24. Resistor R56 provides the termination impedance for the 1 and 10 kc injection frequencies. Resistor R25 and capacitor C27 provide decoupling for emitter follower Q7. The emitter follower isolates the 1 and 10 kc output mixer circuit from third receiver mixer Q6 and provides a low-impedance source for the emitter circuit of the mixer. The 1 and 10 kc injection signal is a frequency between 3.301 and 3.400 mc in 1-kc increments. The output from emitter follower Q7 is developed across resistor R26 and is coupled through capacitor C29 and isolating resistor R30 to the emitter of third receiver mixer Q6. The input from the mid frequency mixer (2.8 to 2.9 mc) is coupled by capacitor C31 to the base of third receiver mixer Q6. The base bias is provided by 20 vdc applied to voltage divider R32, R29. Resistor R31 is the emitter resistor. The output circuit of third receiver mixer Q6 is a 500-kc parallel-tuned circuit consisting of capacitor C32 and the primary of transformer T1. Therefore, this circuit will reject all products from the mixer except the desired 500-kc difference frequency. The 500 kc if. output signal is coupled through transformer T1 and is applied to the mode gates circuit in Receiver Mode Selector Electronic Assembly A2A1.

4-76. LOW FREQUENCY MIXER, TEST DATA.

4-77. Pertinent references and applicable test data for the low frequency mixer are as follows:

a. Radio Receiver R-1051/URR, Main Frame, Schematic Diagram, Figure 5-1.

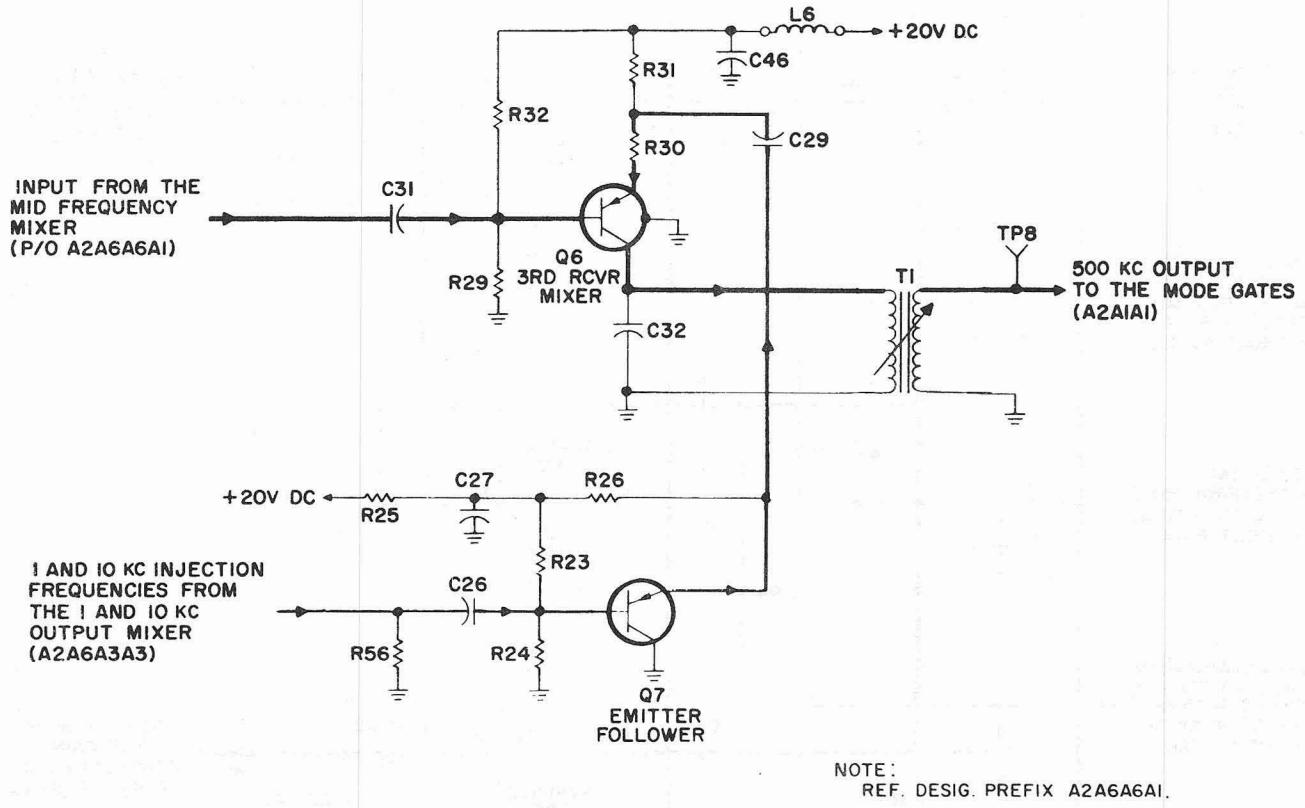

Figure 4-8. Low Frequency Mixer, Simplified Schematic Diagram

b. RF Translator Electronic Subassembly, Servicing Block Diagram, Figure 4-53.

c. RF Translator Electronic Subassembly, Schematic Diagram, Figure 5-11.

d. RF Translator, Component and Test-Point Location, Figure 5-101.

e. Required Test Equipment:

(1) RF Signal Generator, CAQI-606A.

(2) Translator/Synthesizer Test Set, TS-2134/WRC-1.

(3) Heterodyne Voltmeter, Bruel and Kjaer, 2005.

(4) Multimeter, AN/PSM-4.

f. Refer to paragraph 3-36 in Technical Manual for Repair of AN/WRC-1 and R-1051/URR 2N Modules, NAVSHIPS 95700, for low frequency mixer adjustment procedures.

4-78. LSB FILTER, FUNCTIONAL CIRCUIT DESCRIPTION.

4-79. LSB filter A2A1FL3 (figure 4-9), which forms a part of Receiver Mode Selector Electronic Assembly A2A1, filters the 500 kc LSB if. signal from the low frequency mixer in RF Translator Electronic Subassembly A2A6A6 and applies it to gain-controlled if. amplifier A2A3A2. The LSB filter circuit is used only during the LSB and ISB modes of operation. The following paragraphs describe the operation of this circuit for each of the indicated modes of operation.

4-80. LSB OPERATION. The 500 kc if. signal is coupled by capacitor C1 to the cathodes of gating diodes CR1 and CR2 and to coupling capacitor C7. In LSB mode, 20 vdc is applied through resistors R3 and R7 to the anodes of diodes CR1 and CR3 and through resistors R3 and R6 to the anodes of diodes CR2 and CR4. A ground is applied to the cathodes of diodes CR3 and CR4, producing forward bias and effectively placing the ground on the anode of diodes CR1, CR2, CR3, and CR4. Therefore, any portion of the if. signal passing through diodes CR1 and CR2 will be shorted to

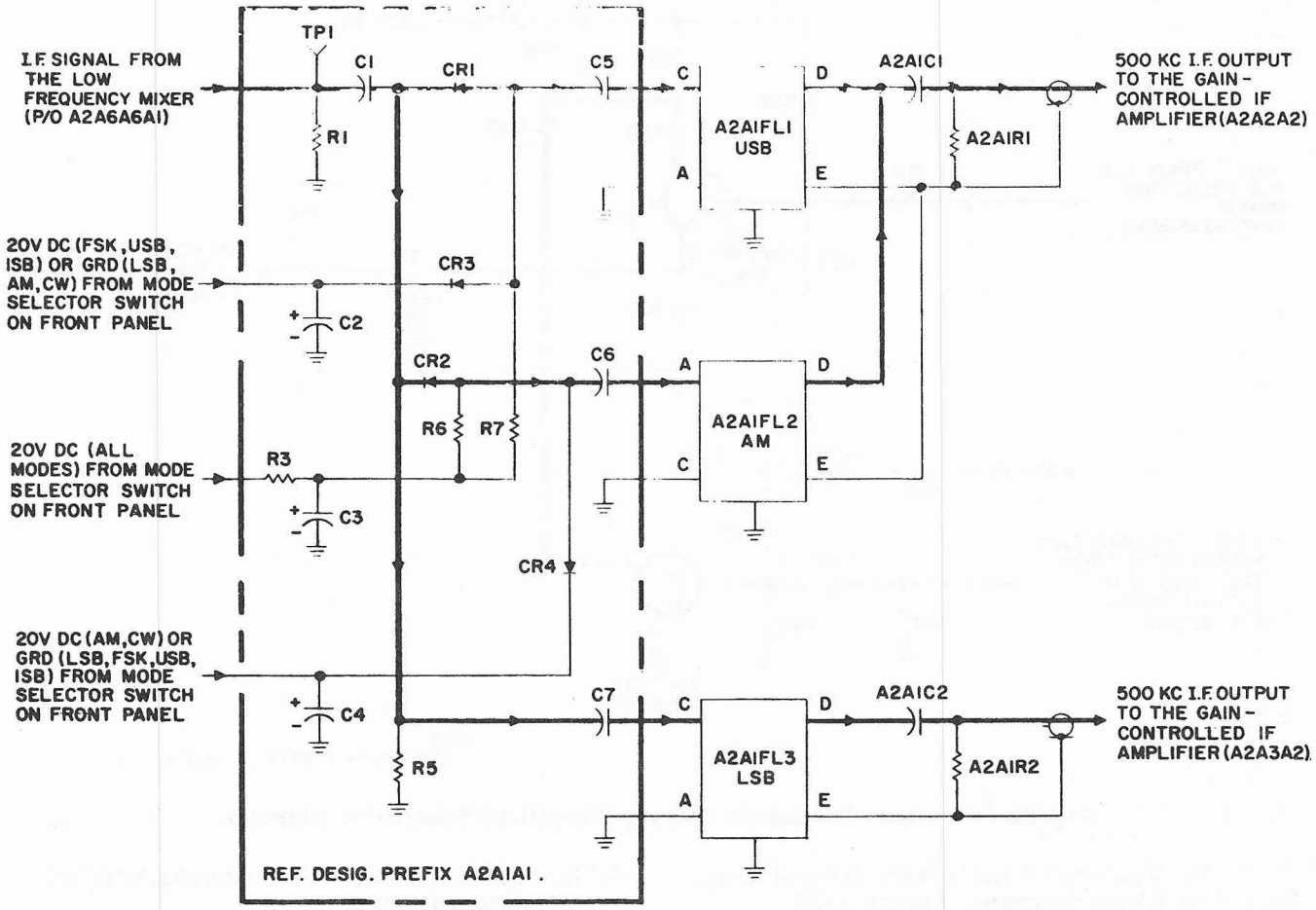

Figure 4-9. Mode Gates and Filters, Simplified Schematic Diagram

ground. The if. signal is coupled through capacitor C7 to LSB filter A2A1FL3. The LSB filter is a mechanical filter which suppresses undesired signals, allowing only the desired LSB signal to pass. Coupling capacitor C7 is selected to provide an input to the filter that is series resonant at 500 kc. Coupling capacitor A2A1C2 provides an output circuit for the filter that is series resonant at 500 kc. Resistor R5 is part of the biasing network for gates CR1 and CR2 and also is part of the input circuit to the filters. Resistor A2A1R2 is the output termination for filter A2A1FL3.

4-81. ISB OPERATION. The lower sideband portion of the ISB signal passes through the LSB filter in the same manner as the LSB signal. (Refer to paragraph 4-80.)

4-82. LSB FILTER, TEST DATA.

4-83. Pertinent references and applicable test data for the LSB filter circuit are as follows:

a. Radio Receiver R-1051/URR, Main Frame, Schematic Diagram, Figure 5-1.

b. Receiver Mode Selector Electronic Assembly, Servicing Block Diagram, Figure 4-54.

c. Receiver Mode Selector Electronic Assembly, Schematic Diagram, Figure 5-2.

d. Required Test Equipment:

(1) Multimeter, AN/PSM-4.

(2) RF Signal Generator, CAQI-606A.

(3) Electronic Multimeter, CCVO-91CA.

(4) Cable Assemblies, W2 and W3.

(5) Common Electronic Circuit Test Set, TS-2135/WRC-1.

e. Mode Gates, Component and Test-Point Location, Figure 5-23.

f. Receiver Mode Selector Electronic Assembly, Left Side View, Component Location, Figure 5-22.

4-84. USB MODE GATE AND FILTER, FUNCTIONAL CIRCUIT DESCRIPTION.

4-85. The USB mode gate and filter (figure 4-9) consists of a gating diode (CR1) and a USB filter (A2A1FL1). This circuit, which forms a part of Receiver Mode Selector Electronic Assembly A2A1, gates the 500 kc USB if. signal from the low frequency mixer in RF Translator Electronic Subassembly A2A6A6 through the USB filter to gain-controlled if. amplifier A2A2A2. The USB mode gate and filter circuit is used only during the USB, ISB, or FSK modes of operation. The following paragraphs describe the operation of this circuit for each of the indicated modes of operation.

4-86. USB OPERATION. The 500 kc if. signal applied to the mode gates is coupled by capacitor C1 to the cathodes of gating diodes CR1 and CR2. In USB, ISB, and FSK modes, gating diode CR1 is forward-biased by 20 vdc applied through resistors R3 and R7 to its anode and by the ground applied through resistor R5 to its cathode. The 20 vdc is also applied through resistors R3 and R6 to the anodes of diodes CR2 and CR4. A ground is applied to the cathode of diode CR4, producing forward bias and effectively placing the ground on the anodes of diodes CR2 and CR4. Diode CR2 is reverse-biased due to the ground on its anode and approximately 7.3 vdc on its cathode (figure 5-2). The if. signal will pass through forward-biased diode CR1 and be rejected by reverse-biased diode CR2. The if. signal is then coupled through capacitor C5 to USB filter A2A1FL1. The USB filter is a mechanical filter that suppresses undesired signals, allowing only the desired signal to pass. Coupling capacitor C5 is selected to provide an input circuit for the filter that is series resonant at 500 kc. Coupling capacitor A2A1C1 provides an output circuit for the filter that is series resonant at 500 kc. Resistor A2A1R1 is the terminating resistor for filter A2A1FL1.

4-87. ISB OPERATION. The upper-sideband portion of the ISB signal passes through the USB mode gate and filter in the same manner as the USB signal (refer to paragraph 4-86).

4-88. FSK OPERATION. The FSK signal passes through the USB mode gate and filter in the same manner as the USB signal (refer to paragraph 4-86).

4-89. USB MODE GATE AND FILTER, TEST DATA.

4-90. Pertinent references and applicable test data for the USB mode gate and filter circuit are as follows:

a. Radio Receiver R-1051/URR, Main Frame, Schematic Diagram, Figure 5-1.

b. Receiver Mode Selector Electronic Assembly, Servicing Block Diagram, Figure 4-54.

c. Receiver Mode Selector Electronic Assembly, Schematic Diagram, Figure 5-2.

d. Required Test Equipment:

(1) Multimeter, AN/PSM-4.

(2) RF Signal Generator, CAQI-606A.

(3) Electronic Multimeter, CCVO-91CA.

(4) Cable Assemblies, W2 and W3.

(5) Common Electronic Circuit Test Set, TS-2135/WRC-1.

e. Mode Gates, Component and Test-Point Location, Figure 5-23.

f. Receiver Mode Selector Electronic Assembly, Left Side View, Component Location, Figure 5-22.

4-91. AM MODE GATE AND FILTER, FUNCTIONAL CIRCUIT DESCRIPTION.

4-92. The AM mode gate and filter (figure 4-9) consists of a gating diode (CR2) and an AM filter (A2A1FL2). This circuit, which forms a part of Receiver Mode Selector Electronic Assembly A2A1, gates the 500 kc AM if. signal from the low frequency mixer in RF Translator Electronic Subassembly A2A6A6, through the AM filter to gain-controlled if. amplifier A2A2A2. The AM mode gate and filter circuit is used only during the AM and CW modes of operation. The following paragraphs describe the operation of this circuit for each of the indicated modes of operation.

4-93. AM OPERATION. The 500 kc if. signal applied to the mode gates is coupled by capacitor C1 to the cathode of gating diodes CR1 and CR2. In the AM and CW modes, gating diode CR2 is forward-biased by 20 vdc applied through resistor R3 and R6 to its anode and by ground applied through resistor R5 to its cathode. The 20 vdc is also applied through resistors R3 and R7 to the anodes of diodes CR1 and CR3. A ground is applied to the cathode of diode CR3, producing forward bias and effectively placing the ground on the anodes of diodes CR1 and CR3. Diode CR1 is reverse-biased by the ground on its anode and approximately 7.3 vdc on its cathode (figure 5-2). The if. signal will pass through forward-biased diode CR2 and be rejected by reverse-biased diode CR1. The if. signal is then coupled through capacitor C6 to AM filter A2A1FL2. The AM filter is a mechanical filter which suppresses the undesired signals, allowing only the desired signal to pass. Coupling capacitor C6 is selected to provide an input circuit for the filter that is resonant at 500 kc. Coupling capacitor A2A1C1 provides an output circuit for the filter that is series resonant at 500 kc.

4-94. CW OPERATION. The CW signal passes through the AM mode gate and filter in the same manner as the AM signal (refer to paragraph 4-93).

4-95. AM MODE GATE AND FILTER, TEST DATA.

4-96. Pertinent references and applicable test data for the AM mode gate and filter circuit are as follows:

a. Radio Receiver R-1051/URR, Main Frame, Schematic Diagram, Figure 5-1.

b. Receiver Mode Selector Electronic Assembly, Servicing Block Diagram, Figure 4-54.

c. Receiver Mode Selector Electronic Assembly, Schematic Diagram, Figure 5-2.

d. Required Test Equipment:

(1) Multimeter, AN/PSM-4.

(2) RF Signal Generator, CAQI-606A.

(3) Electronic Multimeter, CCVO-91CA.

(4) Cable Assemblies, W2 and W3.

(5) Common Electronic Circuit Test Set, TS-2135/WRC-1.

e. Mode Gates, Component and Test Point Location, Figure 5-23.

f. Receiver Mode Selector Electronic Assembly, Left Side View, Component Location, Figure 5-22.

4-97. GAIN-CONTROLLED IF. AMPLIFIER, FUNCTIONAL CIRCUIT DESCRIPTION.

4-98. The gain-controlled if. amplifier (figure 4-10) consists of four stages of if. amplification (Q1, Q4, Q5, and Q6), the gain of which is controlled by two variable attentuators (Q2 and Q3). These circuits, which form a part of Receiver IF./Audio Amplifier Electronic Assembly A2A2 and A2A3, amplify the 500 kc if. signal from mode gates A2A1 to a level suitable for use in the product or AM detector circuits. The gain-controlled if. amplifier in assembly A2A2 is used during the USB, FSK, AM, and CW modes of operation. The gain-controlled if. amplifier in assembly A2A3 is used during the LSB mode of operation. Both circuits are used during the ISB mode of operation. The following paragraphs describe the operation of the gain-controlled if. amplifier circuit in detail.

4-99. The 500-kc if. signal from the mode gates circuit, is coupled to the base of amplifier Q1 by capacitor C1. Operating voltages for amplifier Q1 are developed from the positive 20 vdc applied to voltage divider R1, R2, and emitter resistor R3. The amplified output from amplifier Q1 is developed across the tune circuit consisting of capacitor C3 and the primary of transformer T1. Transformer T1 couples the amplified if. signal to a voltage divider network consisting of resistor R5 and attenuator Q2. The action of the agc voltage upon the combined circuits of attenuators Q2 and Q3 results in a nearly constant output from if. amplifier Q4. Agc-controlled attenuator Q2 acts as a variable shunt resistance to control the if. signal input level to amplifier Q4. Attenuator Q3 acts as a variable resistor in series with emitter bypass capacitor C9 to control the amount of degeneration in the circuit of amplifier Q4. The agc voltage is applied to the base of attenuator Q2 through voltage divider R6, CR1, and R7. Diode CR1 is a silicon diode used for temperature compensation. An increase in temperature that would normally increase the rate of conduction of attenuator Q2

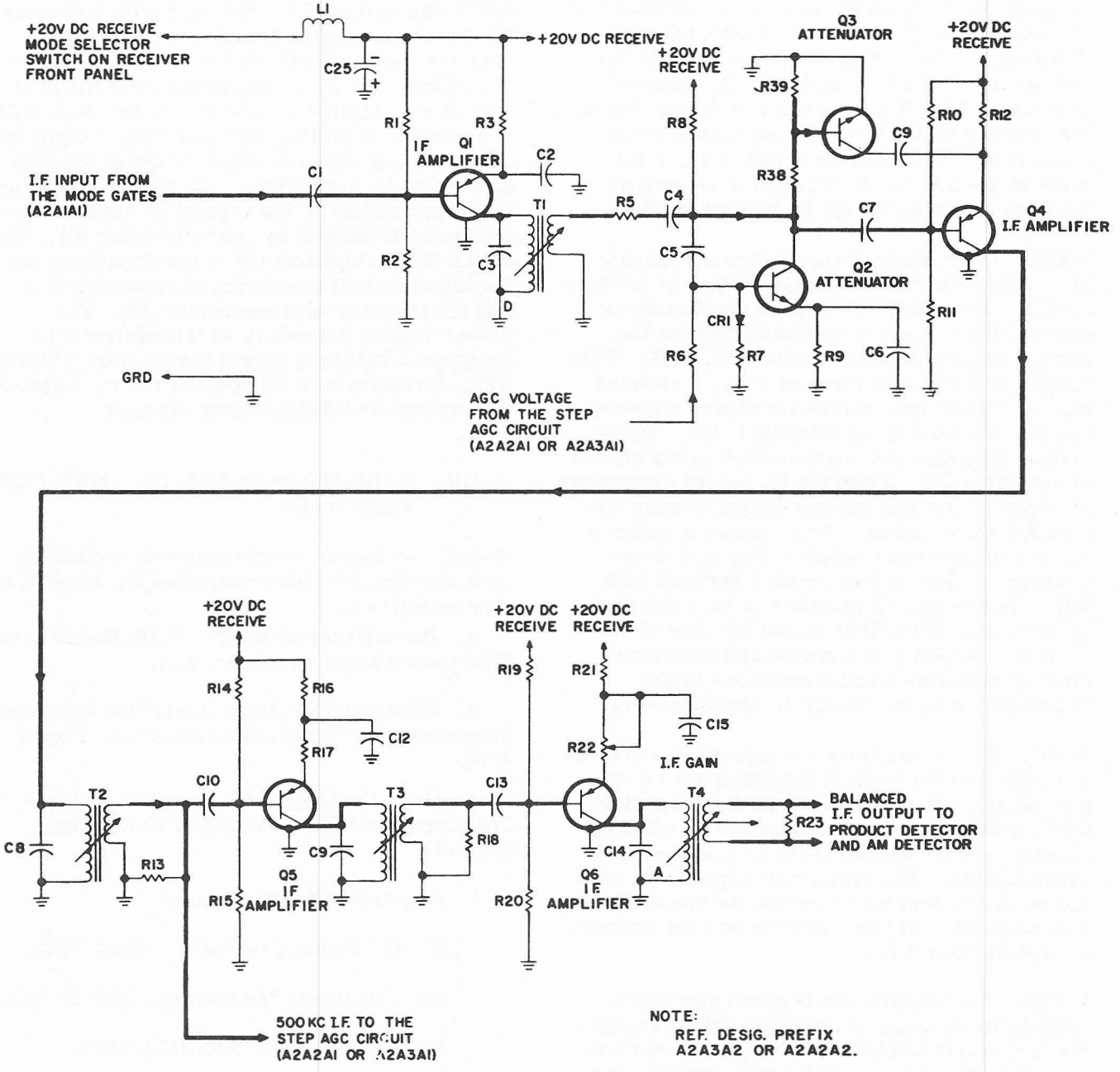

Figure 4-10. Gain Controlled IF. Amplifier, Simplified Schematic Diagram

will also lower the forward resistance of diode CR1. This results in a lower voltage at the base of attenuator Q2, thereby compensating for the temperature change. The collector-emitter circuit of attenuator Q2 acts as a variable shunt resistor with the resistance that varies inversely with the if. signal strength. A strong if. signal causes an increase in the agc voltage, which is applied to the base of attenuator Q2. This results in a larger forward bias on attenuator Q2, causing a higher rate of conduction. This causes a reduction in the level of the 500-kc if. signal that is coupled to the base of amplifier Q4 by capacitor C7.

4-100. The voltage dropped across resistor R8 varies with the rate of conduction of attenuator Q2. Therefore, increased conduction increases the voltage drop and decreases the voltage across voltage divider R38, R39. This results in a reduced forward bias, a reduced rate of conduction, and an increased collector-emitter resistance for attenuator Q3. These actions increase the degeneration in the circuit of amplifier Q4. When the if. signal disappears, the level of the agc voltage drops, biasing attenuator Q2 to cutoff. This causes a reduced voltage drop across resistor R8, and an increased voltage across divider network R38, R39. The resulting increase in forward bias on attenuator Q3 will increase its rate of conduction, resulting in a decreased collector-emitter resistance and a decrease in the degeneration in the circuit of amplifier Q4.

4-101. The output from voltage divider R5, Q2 is coupled to the base of amplifier Q4 by capacitor C7. Operating voltage for amplifier Q4 is developed from the positive 20 vdc applied to voltage divider R10, R11, and emitter resistor R12. The amplified output from amplifier Q4 is developed across the tuned circuit consisting of capacitor C8 and the primary of transformer T2.

4-102. The output from transformer T2 is coupled to the base of amplifier Q5 by capacitor C10 and is applied to the step agc circuit. Resistor R13 serves as the load resistor for transformer T2 and increases the bandwidth of the circuit. Operating voltage for amplifier Q5 is developed from the positive 20 vdc applied to voltage divider R14, R15, and emitter resistor network R16 and R17. A small amount of degeneration (developed by resistor R17) is used to increase the stability of amplifier Q5. The amplified output from transistor Q5 is developed across the tuned circuit consisting of capacitor C11 and the primary of transformer T3.

4-103. The amplified if. signal at the secondary of transformer T3 is coupled to the base of Q6 by capacitor C13. Resistor R18 serves as the load resistor for transformer T3 and increases the bandwidth of the circuit. Operating voltage for Q6 is developed from the positive 20 vdc applied to voltage divider R19, R20 and emitter resistors R21 and R22. Amplifier Q6 is the last stage of amplication in the gain-controlled if. amplifier. The gain of amplifier Q6 is controlled by the amount of degenerative feedback developed by potentiometer R22. The output from amplifier Q6 is developed across the tuned circuit consisting of capacitor C14 and the primary of transformer T4. The center-tapped secondary of transformer T4 develops a balanced output across load resistor R23. Transformer T4 couples the if. output to the product and AM detector circuits.

4-104. GAIN-CONTROLLED IF. AMPLIFIER, TEST DATA.

4-105. Pertinent references and applicable test data for the gain-controlled if. amplifiers are as follows:

a. Radio Receiver R-1051/URR, Main Frame, Schematic Diagram, Figure 5-1.

b. Receiver IF./Audio Amplifier Electronic Assembly, Servicing Block Diagram, Figure 4-55.

d. Gain-Controlled IF./Audio Amplifier, Component and Test-Point Location, Figure 5-31.

f. Required Test Equipment:

(1) RF Signal Generator, CAQI-606A.

(2) Electronic Multimeter, ME-6( )/U.

(3) Oscilloscope, AN/USM-105A.

(4) Multimeter, AN/PSM-4.

(5) Cable Assembly, W1.

(6) Common Electronic Circuit Test Set, TS-2135/WRC-1.

g. Gain-Controlled IF. Amplifiers, Adjustments, Paragraph 5-47.

4-106. PRODUCT DETECTOR, FUNCTIONAL CIRCUIT DESCRIPTION.

4-107. Product detector (figure 4-11) consists of two transistor stages (A3Q1 and A3Q2) connected in a balanced mixer configuration. This circuit, which forms a part of Receiver IF./ Audio Amplifier Electronic Assembly A2A2 and A2A3, extracts intelligence from the USB, LSB, ISB, or FSK 500 kc-if. signals. The product detector in assembly A2A2 is used during the USB and FSK modes of operation. The product detector in assembly A2A3 is used during the LSB mode of operation. Both product detectors are used during the ISB mode of operation. Neither product detector is used during the AM or CW modes of operation. The following paragraphs describe the operation of the product detector circuits in detail.

4-108. The base operating voltage for transistors A3Q1 and A3Q2 (developed by voltage divider A2R24, A2R25 from the positive 20 vdc applied to it from relay A2K3 on the main frame) is applied through the secondary of transformer A2T4. Resistor A2R23 is the load resistor for transformer A2T4. The emitter operating voltage is applied to transistors A3Q1 and A3Q2 through bias resistors A3R2 and A3R4 from the Mode Selector switch on the front panel. (The emitter operating voltage for the product detector in assembly A2A2 is present only during the USB, FSK, and ISB modes of operation. The emitter operating voltage for the product detector in A2A3 is present only during the LSB and ISB modes of operation.) Because of the center tap (ac ground) on the secondary of transformer A2T4, the 500-kc if. signals coupled to the bases of the product detector transistors are of equal magnitude, but 180 degrees out of phase with each other.

4-109. A 500-kc injection signal from 500 kc gate A2A1A2 is coupled to the emitters of transistors A3Q1 and A3Q2 by capacitors A3C1 and A3C4, respectively. Resistors A3R1 and A3R3 provide isolation between the emitters of transistors A3Q1 and A3Q2. The 500-kc injection and 500-kc if. signals are mixed in the two stages, resulting in an output consisting of the sum of the two signals, the difference of the two signals, and the two individual signals. Capacitors A3C2 and A3C3 bypass the sum of the two signals to ground. Since the circuit is balanced, the outputs from transistors A3Q1 and A3Q2 that are developed across transformer A3T1 are 180 degrees out of phase with each other. This results in cancelling of the 500-kc carrier and 500-kc if. signals. Transformer A3T1 has an audio fre-

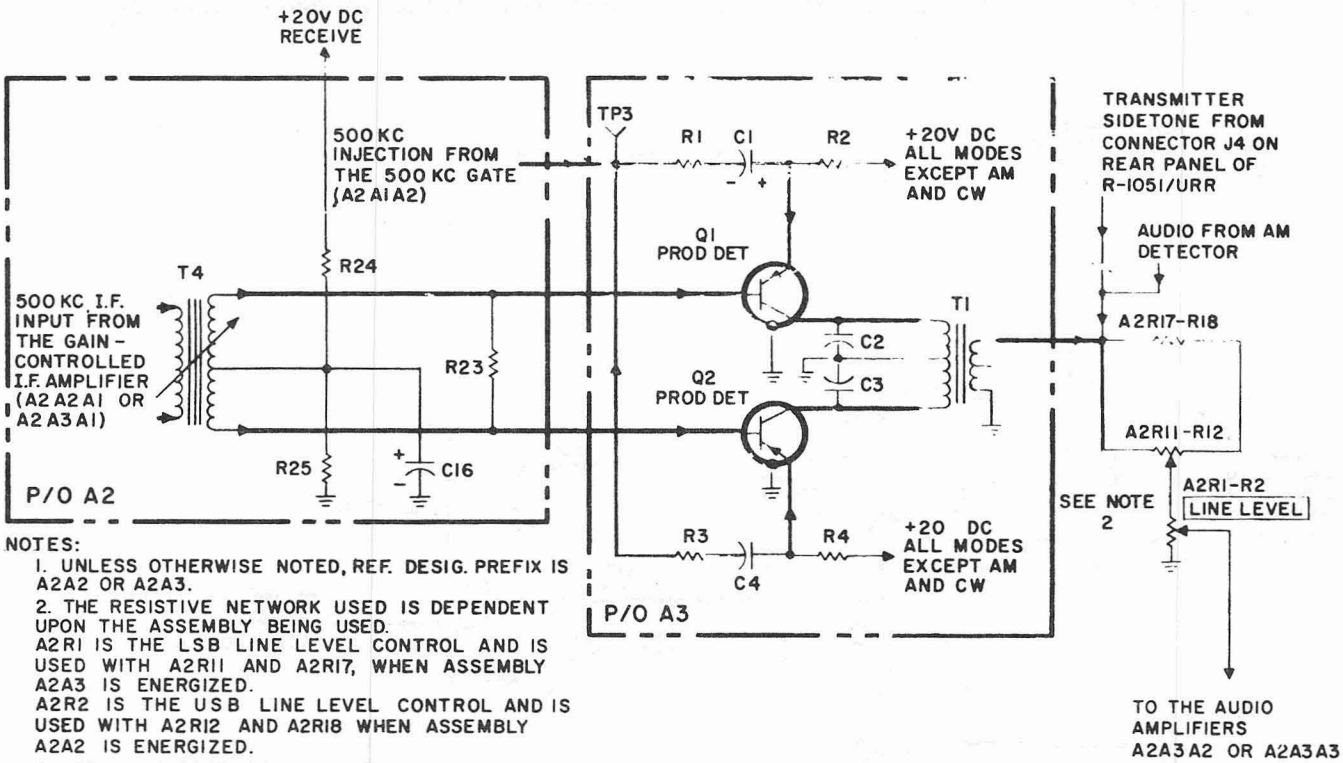

Figure 4-11. Product Detector, Simplified Schematic Diagram

quency response that will attenuate (into the noise region) any of the rf signals not previously cancelled. The difference of the two signals is the desired intelligence, and it is developed across the primary of transformer A3T1. The detected intelligence is coupled to the LINE LEVEL control on the front panel by transformer A3T1.

4-110. PRODUCT DETECTOR, TEST DATA.

4-111. Pertinent references and applicable test data for the product detector circuit are as follows:

a. Radio Receiver R-1051/URR, Main Frame, Schematic Diagram, Figure 5-1.

b. Receiver IF./Audio Amplifier Electronic Assembly, Servicing Block Diagram, Figure 4-55.

c. Receiver IF./Audio Amplifier Electronic Assembly, Schematic Diagram, Figure 5-3.

d. Required Test Equipment:

(1) RF Signal Generator, CAQI-606A.

(2) Electronic Multimeter, ME-6( )/U.

(3) Multimeter, AN/PSM-4.

(4) Cable Assembly, W1.

(5) Common Electronic Circuit Test Set, TS-2135/WRC-1.

e. Product/AM Detectors, Component Location, Figure 5-29.

4-112. AM DETECTOR, FUNCTIONAL CIRCUIT DESCRIPTION.

4-113. The AM detector (figure 4-12) consists of an if. amplifier (A3Q3), a diode detector (A3CR2), and an audio amplifier (A1Q9). These circuits, which form a part of Receiver IF./ Audio Amplifier Electronic Assembly A2A2 and A2A3, extract the intelligence from the 500-kc if. signals in the CW and AM modes of operation. The AM detector circuit in A2A2 is used during the CW and AM modes of operation. The AM detector circuit in A2A3 is not used in any mode of operation. The following paragraphs describe the operation of the AM detector circuit in detail.

4-114. The 500-kc if. signal is coupled to the base of transistor A3Q3 by transformer A2T4. The base operating voltage for transistor

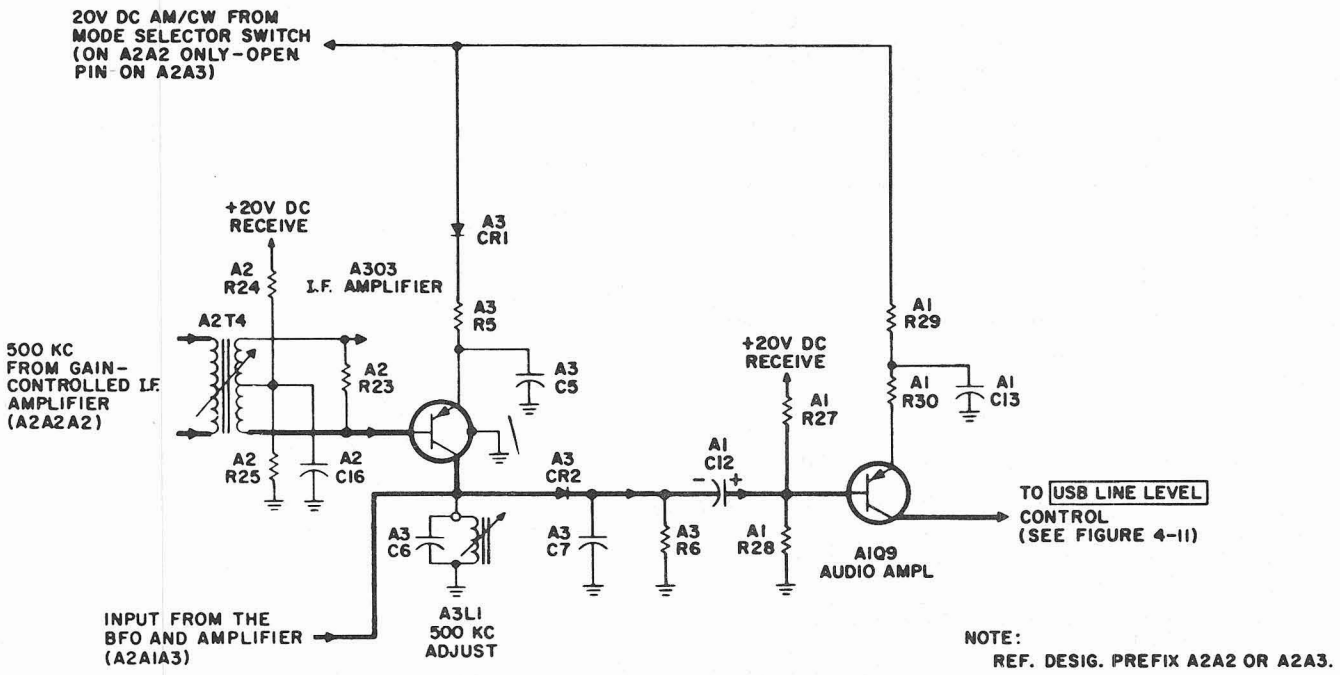

Figure 4-12. AM Detector, Simplified Schematic Diagram

A3Q3 (developed by voltage divider A2R24, A2R25 from the 20 vdc applied to it from relay A2K3 on the main frame) is applied through the secondary of transformer A2T4. The emitter operating voltage for amplifier A3Q3 is the 20 vdc applied through diode A3CR1 and resistor A3R5 from the Mode Selector switch on the front panel. Diode A3CR1 prevents any incidental base currents in amplifier A3Q3 from affecting the operating voltage for the product detector when operating in any mode other than AM or CW. The amplified output from amplifier A3Q3 is developed across the tuned circuit consisting of capacitor A3C6 and inductor A3L1. In the CW mode of operation, the BFO signal from Receiver Mode Selector Electronic Assembly A2A1 is mixed with the 500-kc if. signal in the tuned circuit. The output from the tuned circuit is detected by diode A3CR2. Capacitor A3C7 bypasses any rf passed by diode A3CR2 to ground. This ensures that the ac voltages developed across A3R36 will be the voice signals extracted from the AM signal or the audio difference between the 500-kc if. and the BFO frequency during the CW mode of operation.

4-115. The audio signals developed across resistor A3R6 are coupled to the base of amplifier A1Q9 by capacitor A1C12. The base operating voltage for amplifier A1Q9 is developed by voltage divider A1R27, A1R28 from the positive 20 vdc applied to it from relay A2K3 on the main frame. The emitter operating voltage is applied through emitter resistors A1R29 and A1R30 from the 20 vdc present at the Mode Selector switch on the front panel. Degeneration (developed by resistor A1R30)controls the gain and improve the distortion characteristics of amplifier A1Q9. The amplified output of amplifier A1Q9 is applied to the USB LINE LEVEL control on the front panel (see figure 4-11).

4-116. AM DETECTOR, TEST DATA.

4-117. Pertinent references and applicable test data for the AM detector circuit are as follows:

a. Radio Receiver R-1051/URR, Main Frame, Schematic Diagram, Figure 5-1.

b. Receiver IF./Audio Amplifier Electronic Assembly, Servicing Block Diagram, Figure 4-55.

c. Receiver IF./Audio Electronic Assembly, Schematic Diagram, Figure 5-3.

d. Receiver IF./Audio Electronic Assembly, Adjustments, Paragraph 5-47.

e. Product/AM Detectors, Component Location, Figure 5-29.

f. Required Test Equipment:

(1) RF Signal Generator, CAQI-606A.

(2) Electronic Multimeter, ME-6( )/U.

(3) Multimeter, AN/PSM-4.

(4) Cable Assembly, W1.

(5) Common Electronic Circuit Test Set, TS-2135/WRC-1.

g. AM Detector, Adjustments, Paragraph 5-47.

4-118. AUDIO AMPLIFIER, FUNCTIONAL CIRCUIT DESCRIPTION.

4-119. Audio amplifier (figure 4-13) consists of an audio amplifier (Q7), an emitter follower (Q8), and a push-pull amplifier (Q9, Q10). These circuits, which form a part of Receiver IF./Audio Amplifier Electronic Assembly A2A2 and A2A3, amplify the audio signals from the USB or LSB LINE LEVEL control to a level suitable for driving the headset and the remote audio output accessory. The audio amplifier portion of assembly A2A2 is used during the USB, FSK, AM, and CW modes of operation. The audio amplifier portion of assembly A2A3 is used during the LSB mode of operation. Both audio amplifiers are used during the ISB mode of operation. The audio amplifier circuits are energized during transmit operation to allow the operator to monitor the respective sidetones. The following paragraphs describe the operation of the audio amplifier circuit in detail.

4-120. The audio signals present at the USB or LSB LINE LEVEL control are coupled to the base of audio amplifier Q7 by capacitor C17. (The audio signals are applied from either the product detector, AM detector, or connector J4 on the rear of the R-1051/URR. The operating voltage for amplifier Q7 is developed by voltage divider R26, R27, R28 and emitter resistors R31 and R32 from the positive 20 vdc applied to them from the Mode Selector switch on the front panel. Capacitor C18 and resistor R26 perform a decoupling function to prevent

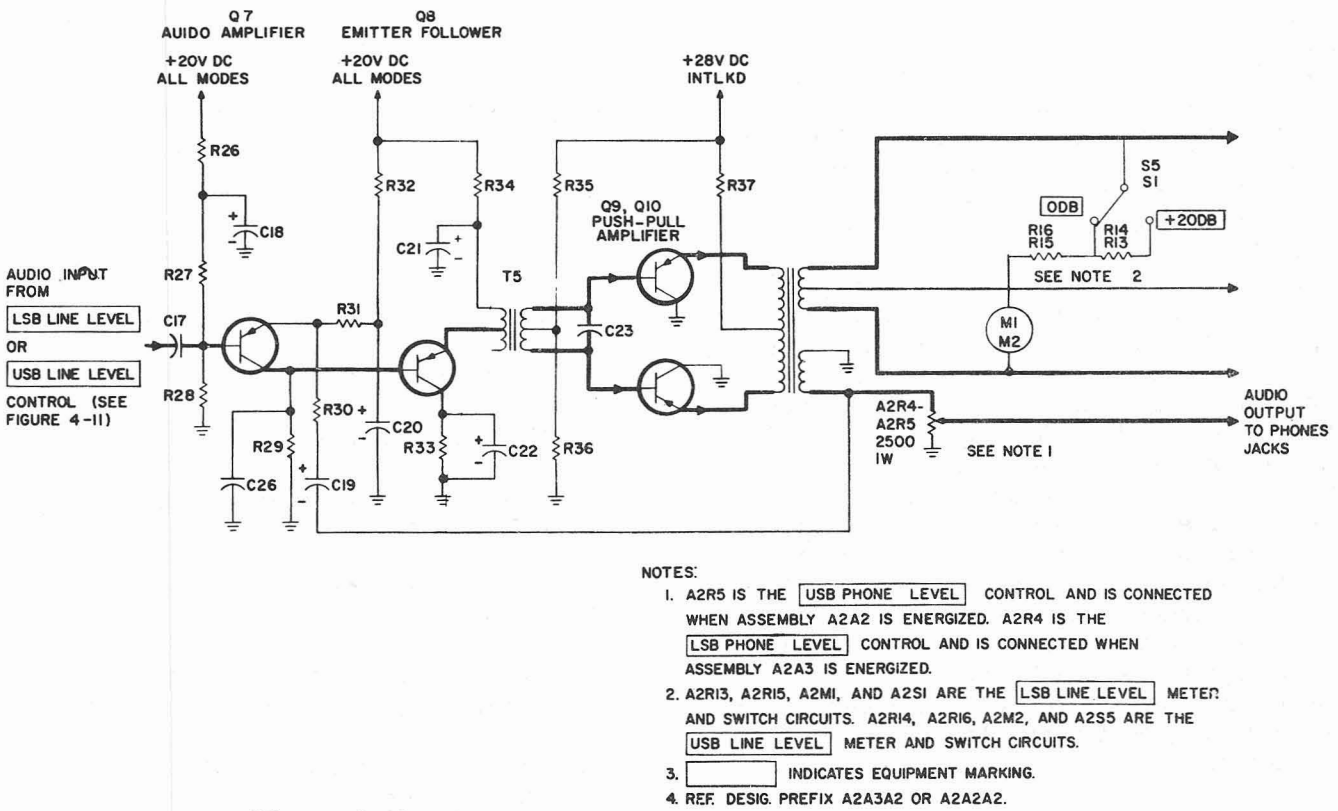

NOTES:

1. A2R5 IS THE [USB PHONE LEVEL] CONTROL AND IS CONNECTED WHEN ASSEMBLY A2A2 IS ENERGIZED. A2R4 IS THE [LSB PHONE LEVEL] CONTROL AND IS CONNECTED WHEN ASSEMBLY A2A3 IS ENERGIZED.
2. A2RI3, A2RI5, A2MI, AND A2SI ARE THE [LSB LINE LEVEL] METER AND SWITCH CIRCUITS. A2RI4, A2RI6, A2M2, AND A2S5 ARE THE [USB LINE LEVEL] METER AND SWITCH CIRCUITS.
3. [ ] INDICATES EQUIPMENT MARKING.
4. REF. DESIG. PREFIX A2A3A2 OR A2A2A2.

Figure 4-13. Audio Amplifier, Simplified Schematic Diagram

any fluctuations in line voltage from affecting the operation of amplifier Q7. Capacitor C20 is an emitter bypass capacitor. Negative feedback is produced by coupling the output from transformer T6 back to the emitter of amplifier Q7 through capacitor C19. Resistors R30 and R31 form a voltage divider for providing the desired amount of feedback to the emitter of amplifier Q7. The RC network consisting of capacitor C26 and resistor R29 provides high frequency suppression to maintain the frequency response of the circuit within the required limitations.

4-121. The amplified audio output from amplifier Q7 is developed across resistor R29 and is applied directly to the base of emitter follower Q8. Operating voltage for emitter follower Q8 is developed by emitter resistor R34 from the positive 20 vdc from the Mode Selector switch on the front panel. Emitter follower Q8 provides the necessary isolation and impedance matching between amplifier Q7 and the push-pull amplifier Q9, Q10. Resistor R33 is the collector resistor, which is bypassed by capacitor C22. The output from emitter follower Q8 is developed across the primary of transformer T5.

4-122. Transformer T5 couples the output from emitter follower Q8 to the bases of push-pull amplifiers Q9 and Q10. The base operating voltage for the push-pull amplifier is developed by voltage divider R35, R36 from the positive 28 vdc from tune relay A2K1 (located on the main frame). This operating voltage is applied through the secondary of transformer T5. Emitter operating voltage for the push-pull amplifier is the positive 28 vdc from tune relay A2K1 (on the main frame), which is applied through resistor R37 and the primary of transformer A2A2T1 or A2A3T1. The 28 vdc is interlocked through relay A2K1 to enable the audio output to be shut off when the R-1051/URR is being tuned. This prevents spurious feedback from affecting the tuning. The amplified output from push-pull amplifier Q9, Q10 is developed across the primary of transformer A2A2T1 or A2A3T1. Transformer A2A2T1 or A2A3T1 couples the audio signals to the PHONES jacks on the front panel for monitoring with the headset, and to the J-1265/U for driving a remote

speaker. The USB or LSB LINE LEVEL meter is connected across the remote audio output. This meter provides an indication of the level of audio on the remote output lines. The USB or LSB LINE LEVEL switches select the meter range to be used.

4-123. AUDIO AMPLIFIER, TEST DATA.

4-124. Pertinent references and applicable test data for the audio amplifier circuit are as follows:

a. Radio Receiver R-1051/URR, Main Frame, Schematic Diagram, Figure 5-1.

b. Receiver IF./Audio Amplifier Electronic Assembly, Servicing Block Diagram, Figure 4-55.

c. Receiver IF./Audio Amplifier Electronic Assembly, Schematic Diagram, Figure 5-3.

d. Gain-Controlled IF./Audio Amplifier, Component Location, Figure 5-31.

e. Required Test Equipment:

(1) Audio Signal Generator, AN/URM-127.

(2) Electronic Multimeter, CCVO-91CA.

(3) Multimeter, AN/PSM-4.

(4) Cable Assembly, W1.

(5) Common Electronic Circuit Test Set, TS-2135/WRC-1.

4-125. 500 KC GATE, FUNCTIONAL CIRCUIT DESCRIPTION.

4-126. The 500 kc gate (CR1, figure 4-14), which forms a part of Receiver Mode Selector Electronic Assembly A2A1, gates the 500-kc if. signal from the 1 mc divide-by-two circuit in Frequency Standard Electronic Assembly A2A5 to the product detector circuit in Receiver IF./ Audio Amplifier Electronic Assemblies A2A2 and/or A2A3. The 500 kc gate circuit is used only during the LSB, FSK, USB, or ISB modes of operation. The following paragraphs describe the operation of this circuit for each of the indicated modes of operation in detail.

4-127. LSB, FSK, USB, and ISB OPERATION. The 500-kc local carrier signal from the 1 mc divide-by-two circuit is coupled by capacitor C2 to the anode of gating diode CR1. To explain the bias development for gate CR1, assume that gate CR1 is removed from the circuit. In LSB, FSK, USB, and ISB modes, 20 vdc is applied to voltage divider R1, R5, R6 and voltage divider R2, R3, R4. This produces a voltage of approximately 18.8 vdc at the junction of resistors R3 and R4 and approximately 6.7 vdc at the junction of resistors R5 and R6. Replacing the diode would result in forward biasing. Since the gate is forward-biased, the 500-kc if. signal is allowed to pass and is coupled by capacitor C4 to the product detector to be used in demodulating.

4-128. AM and CW OPERATION. In AM and CW modes, gating diode CR1 is reverse-biased by removing the 20 vdc from voltage divider

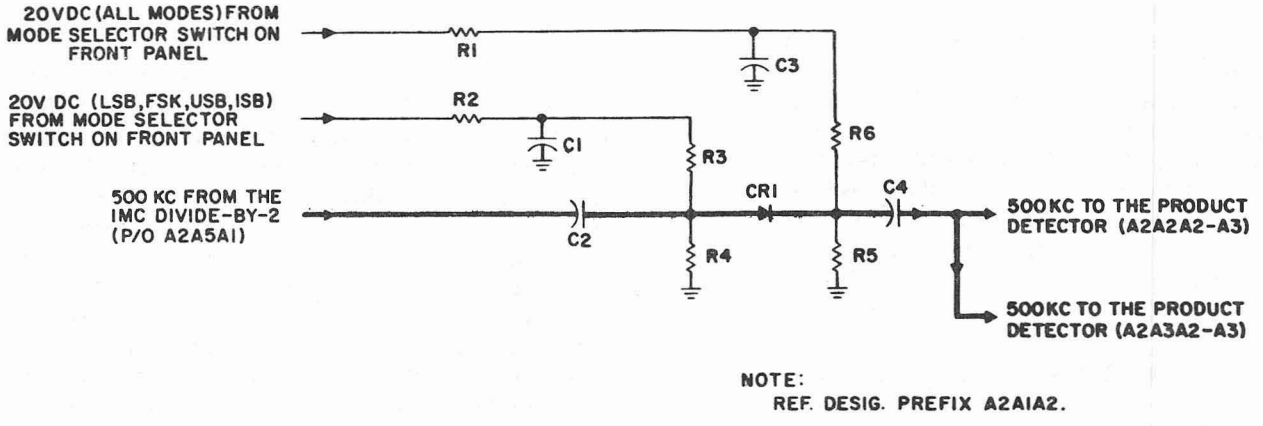

Figure 4-14. 500 KC Gate, Simplified Schematic Diagram

R2, R3, R4, thereby preventing the 500 kc from being passed.

4-129. 500 KC GATE, TEST DATA.

4-130. Pertinent references and applicable test data for the 500 kc gate circuit are as follows:

a. Radio Receiver R-1051/URR, Main Frame, Schematic Diagram, Figure 5-1.

b. Receiver Mode Selector Electronic Assembly, Servicing Block Diagram, Figure 4-54.

c. Receiver Mode Selector Electronic Assembly, Schematic Diagram, Figure 5-2.

d. Required Test Equipment:

(1) Multimeter, AN/PSM-4.

(2) Cable Assemblies, W2 and W3.

(3) Common Electronic Circuit Test Set, TS-2135/WRC-1.

e. 500 KC Gate, Component and Test-Point Location, Figure 5-25.

4-131. STEP AGC, FUNCTIONAL CIRCUIT DESCRIPTION.

4-132. The step agc circuit (figure 4-15) consists of two if. amplifiers (Q7, Q8), a time detector (CR5), a hang detector (CR4), a coincidence detector (Q6), a switch (Q5), an emitter follower (Q4), and three dc amplifiers (Q1, Q2, Q3). These circuits, which form a part of Receiver IF/Audio Amplifier Electronic Assembly A2A2 and A2A3, produce the automatic gain control (agc) voltages, which are used in the gain-controlled if. amplifier circuits and the rf amplifier circuit. (Refer to paragraphs 4-59 and 4-99.) The step agc portion of assembly A2A2 is used during the USB, AM, FSK, and CW modes of operation. The step agc portion of assembly A2A3 is used during the LSB mode of operation. Both step agc circuits are used during the ISB mode of operation. The following paragraphs describe the operation of the step AGC circuit in detail.

4-133. The 500-kc if. output from gain-controlled if. amplifier A2Q4 (paragraph 4-102) is coupled to the base of if. amplifier Q8 by capacitor C4. The operating voltage for if. amplifier Q8 is developed by voltage divider R23, R26 and emitter resistor R22 from the positive 20 vdc applied to them from the Mode Selector switch on the front panel. The amplified output from amplifier if. Q8 is developed across the tuned circuit consisting of capacitor C10 and the primary of transformer T2. Resistors R24 and R25 function together to increase the bandwidth of the amplifier circuit. The gain of if. amplifier Q8 is controlled by potentiometer R25. Capacitor C11 is the emitter bypass capacitor.

4-134. The output from transformer T2 is coupled to the base of if. amplifier Q7 by capacitor C9. Resistor R21 serves as the load for transformer T2. The operating voltage for if. amplifier Q7 is developed by voltage divider R20, R21 and emitter resistor R18 from the 20 vdc applied from the Mode Selector switch on the front panel. The amplified output from if. amplifier Q7 is developed across the tuned circuit consisting of capacitor C8 and the primary of transformer T1. Capacitor C7 is the emitter bypass capacitor.

4-135. Two outputs, identical in frequency and polarity but differing in amplitude by 20 percent are taken from transformer T1. The smaller of the two outputs (designated by E) is applied to hang detector CR4, where it is rectified and used to charge capacitor C3. The resistive network consisting of resistors R16, R15, and thermistor RT1 compensates for variations in the input to hang detector CR4 that result from temperature changes. The charge on capacitor C3 is the emitter bias for coincidence detector Q6. The larger of the two outputs (designated 1.2E) is applied to time detector CR5, where it is rectified and used to charge capacitor C5. The dc voltage at capacitor C5 is the base bias for coincidence detector Q6.

4-136. When a signal is present, coincidence detector Q6 is back-biased, due to the voltage (1.2E) on the base and the voltage (E) on the emitter. When the antenna signal is removed, capacitor C5 discharges through resistor R19, and capacitor C3 discharges through the high input impedance of emitter follower Q4. After a discharge time of approximately 600 milliseconds duration, the voltage on capacitor C5 and capacitor C3 are equal, thereby forward-biasing coincidence detector Q6, and causing it to conduct. Capacitors C3 and C5 then discharge very rapidly to ground, through the small emitter-to-collector resistance of coin-

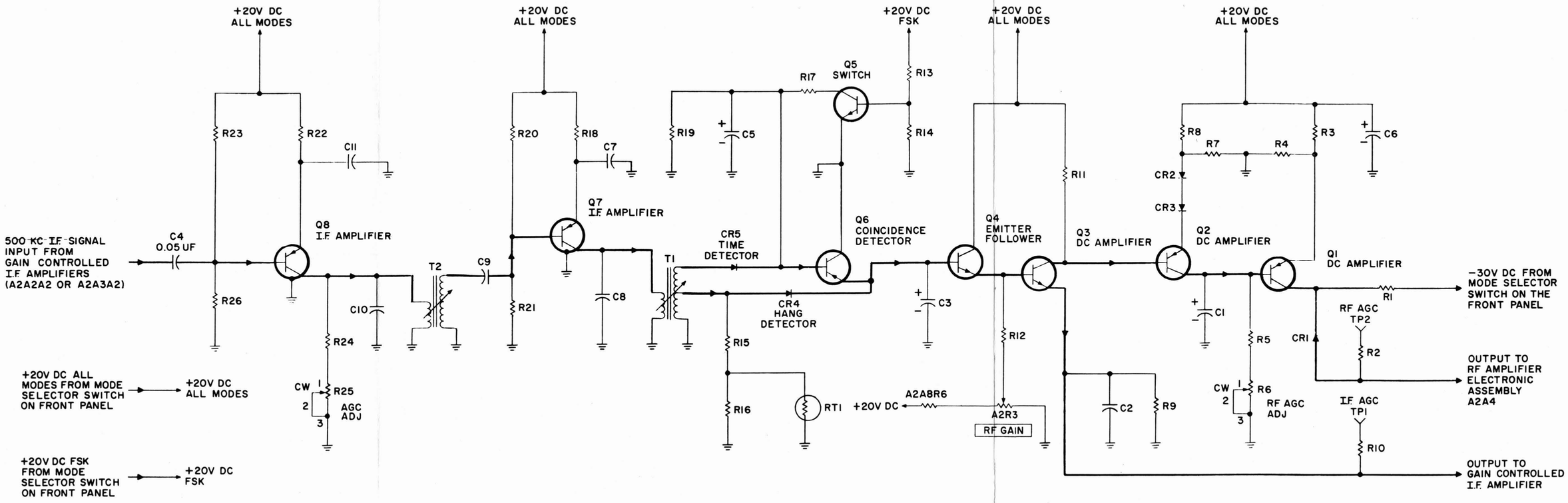

NOTE:

UNLESS OTHERWISE NOTED, REF. DESIG. PREFIX IS A2A2A1 OR A2A3A1.

CAUTION

When making resistance checks at semi-conductor devices, use only the higher scales of the multimeter so as to avoid unintentional damage to the semi-conductor device due to the meters internal voltage.

Figure 4-15. Step AGC, Simplified Schematic Diagram

cidence detector Q6. If, during this process, new signal information is received, the step agc circuit will immediately reset itself on the new information, as described above.

4-137. Due to the continuous nature of an FSK signal, a shorter hang time for the agc voltage is desired. This is accomplished by reducing the RC time constant in the time detector circuit. In the FSK mode of operation, a positive 20 vdc is applied to voltage divider R13, R14 from the Mode Selector switch on the front panel. Since the emitter of switch Q5 is at ground potential, the voltage applied to the base by voltage divider R13, R14 forward-biases switch Q5, causing it to conduct. This terminates resistor R17 at ground through the small collector-to-emitter resistance of switch Q5. Therefore, the discharge path for capacitor C5 is now through the parallel combination of resistors R17 and R19. Since the values of resistors R17 and R19 are identical, the discharge time for capacitor C5 is one-half of that given for the other modes of operation.

4-138. The strength of the input signal determines the level to which capacitor C3 charges and, thereby, determines the base bias on emitter follower Q4. The hang time of the hang detector and time detector circuits are of sufficient duration so that the charge across capacitor C3 remains relatively constant during the reception of intermittent voice signals. The collector voltage for emitter follower Q4 is applied directly from the Mode Selector switch on the front panel. The RF GAIN control is normally set at a maximum sensitivity position (ground). Therefore, when a signal is present, the charge on capacitor C3 will forward-bias emitter follower Q4, causing it to conduct. This results in a voltage across resistor R12, which is the base bias for dc amplifier Q3. The collector voltage for dc amplifier Q3 is developed across resistor R11 from the positive 20 vdc applied to it from the Mode Selector switch on the front panel. Since the emitter of dc amplifier Q3 is essentially at ground (through resistor R9), an output from emitter follower Q4 will forward-bias dc amplifier Q3, causing it to conduct. The resulting voltage developed across emitter resistor R9 is applied to the gain-controlled if. amplifiers as the required agc voltage. Resistor R9 and capacitor C2 constitute an RC network to filter any leakage (500-kc if.) signal from the agc voltage.

4-139. With no signal output, the collector of dc amplifier Q3 is biased at 20 vdc. This same voltage is the base bias for dc amplifier Q2. Voltage divider R7, R8 develops a bias of approximately 17.1 vdc on the anode of diode CR2 from the positive 20 vdc applied to it from the Mode Selector switch on the front panel. The signal strength determines the rate of conduction of dc amplifier Q3 and the resulting voltage drop across resistor R11. Therefore, with an increase in signal strength, the voltage drop across resistor R11 will increase, and the base bias on dc amplifier Q2 will decrease. If diodes CR2 and CR3 were not in the emitter circuit of dc amplifier Q2, the signal strength would have to be of such magnitude as to cause a 3-volt drop across resistor R11 before dc amplifier Q2 would become forward-biased and conduct. Since the if. and rf agc voltages are both taken from the output from dc amplifier Q3, both circuits would have the same agc threshold. Since the rf circuits of a receiver determine its sensitivity to weak signal reception, and the application of an agc voltage to these circuits tends to decrease this weak signal capability, it is desirable to delay the application of agc to the rf amplifier circuits until the received signal strength has reached a sufficient signal-to-noise ratio. Therefore, diodes CR2 and CR3 are placed in the emitter circuit of dc amplifier Q2. Together, these diodes drop the emitter voltage of dc amplifier an additional 0.8 vdc. Therefore, the signal strength must be of sufficient magnitude to cause an additional 0.8-volt drop across resistor R11 before dc amplifier Q2 becomes forward-biased and conducts. Therefore, the agc threshold for the rf amplifier circuits is at a higher signal input level than that of the if. amplifier circuit. The RF GAIN control is used to desensitize the rf and if. amplifier circuits during strong signal receptions. When the RF GAIN control is varied, a dc voltage between 0 and 5 volts is applied to the base of dc amplifier Q2 through resistor R12, thus forcing dc amplifier Q2 to conduct even in the absence of if. signals. The conduction thus caused will be of sufficient magnitude to override the normal if. and rf agc thresholds, resulting in no delay in the application of the two agc voltages.

4-140. When dc amplifier Q2 conducts, the output voltage is developed across resistors R5 and R6. This voltage serves as the base bias for dc amplifier Q1 and may be varied by potentiometer R6. Capacitor C1 attenuates any 500-kc if. signal leakage. The operating voltage for dc amplifier Q1 is developed by voltage divider R3, R4 from the positive 20 vdc

applied to it from the Mode Selector switch on the front panel. With no agc voltage, the base of dc amplifier Q1 will be at ground potential, forward-biased, unless the RF GAIN control has been adjusted. This saturates dc amplifier Q1, resulting in zero or slightly positive voltage at the collector. Diode CR1 prevents any positive levels from being applied to the rf amplifier circuits. The voltage on the collector of dc amplifier Q1 is the agc voltage for the rf amplifier circuits. As the signal strength increases, the output from dc amplifier Q2 increases, decreasing the forward-biasing of dc amplifier Q1. The collector of dc amplifier Q1 goes more negative as the signal strength increases. When the signal strength is of sufficient magnitude to cut off dc amplifier Q1, the -30 vdc will be the agc voltage applied to the rf amplifier circuit. If the RF GAIN control is set to some position other than for maximum sensitivity, the conduction of dc amplifier Q1 will no longer be dependent only on the signal strength.

4-141. STEP AGC, TEST DATA.

4-142. Pertinent references and applicable test data for the step AGC circuit are as follows:

a. Radio Receiver R-1051/URR, Main Frame, Schematic Diagram, Figure 5-1.

b. Receiver IF./Audio Amplifier Electronic Assembly, Servicing Block Diagram, Figure 4-55.

c. Receiver IF./Audio Electronic Assembly, Schematic Diagram, Figure 5-3.

d. Step AGC, Adjustments, Paragraphs 5-24 and 5-29.

e. Step AGC, Component and Test-Point Location, Figure 5-28.

f. Required Test Equipment:

(1) RF Signal Generator, CAQI-606A.

(2) Electronic Multimeter, ME-6 ( )/U.

(3) Multimeter, AN/PSM-4.

(4) Cable Assembly, W1.

(5) Common Electronic Circuit Test Set, TS-2135/WRC-1.

4-143. BFO AND AMPLIFIER, FUNCTIONAL CIRCUIT DESCRIPTION.

4-144. The BFO and amplifier (figure 4-16) consists of a modified Colpitts oscillator (Q1) and an amplifier (Q2). These circuits, which form a part of Receiver Mode Selector Electronic Assembly A2A1, generate and amplify a signal between 496.5 and 503.5 kc and apply it to the product detector in Receiver IF./Audio Amplifier Electronic Assembly A2A2. The BFO and amplifier circuit is used only for CW operation. The following paragraphs describe the operation of this circuit in detail.

4-145. The frequency of the BFO is determined by the setting of the BFO FREQ control on the front panel. The output voltage of this control can be varied between 0.2 and 20 vdc. This voltage is applied across voltage-variable capacitor CR1, producing a capacitance dependent upon the magnitude of the voltage. The output frequency of oscillator Q1 is determined by the tuned circuit consisting of voltage-variable capacitor CR1, inductor L1, and capacitors C2, C3, C4, C5, and C6. Emitter-to-base feedback sustains oscillations in transistor Q1. The negative temperature coefficient characteristic of capacitor C3 compensates for variations in the operating parameters of transistor Q1 that result from ambient temperature changes.

4-146. Operating voltage for oscillator Q1 is developed from the positive 20 vdc applied to voltage divider R3, R4 and emitter resistor R5 from the Mode Selector switch on the front panel. The output from oscillator Q1 is coupled through capacitor C7 and isolating resistor R6 to the base of amplifier Q2. The operating voltage for amplifier Q2 is developed from the positive 20 vdc applied to voltage divider R7, R8 and emitter resistor R9 from the Mode Selector switch on the front panel. The output from amplifier Q2 is applied to limiters CR2 and CR3, where the signal is limited to approximately 150 mw, and applied to the tuned circuit consisting of capacitor C9 and inductance T1. The signal from the tuned circuit passes through isolating resistor R10 to the product detector circuit in Receiver IF./Audio Amplifier Electronic Assembly A2A2.

4-147. BFO AND AMPLIFIER, TEST DATA.

4-148. Pertinent references and applicable test data for the BFO and amplifier circuit are as follows:

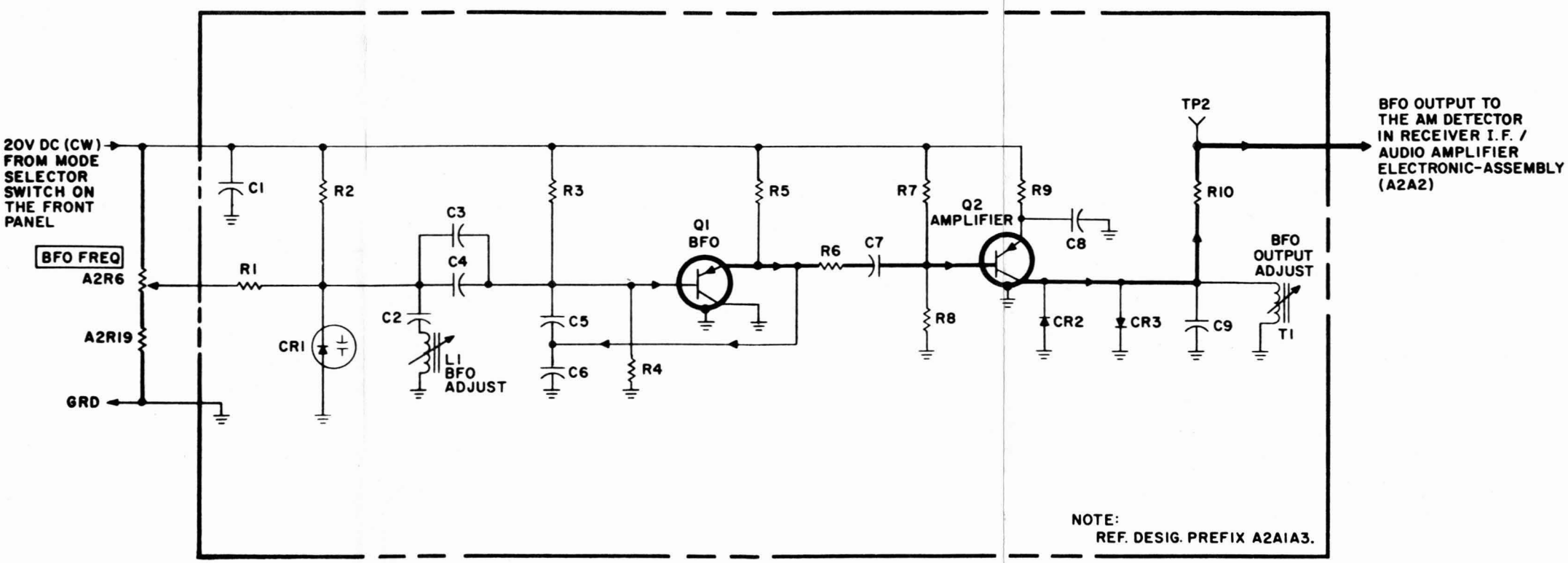

Figure 4-16. BFO and Amplifier, Simplified Schematic Diagram

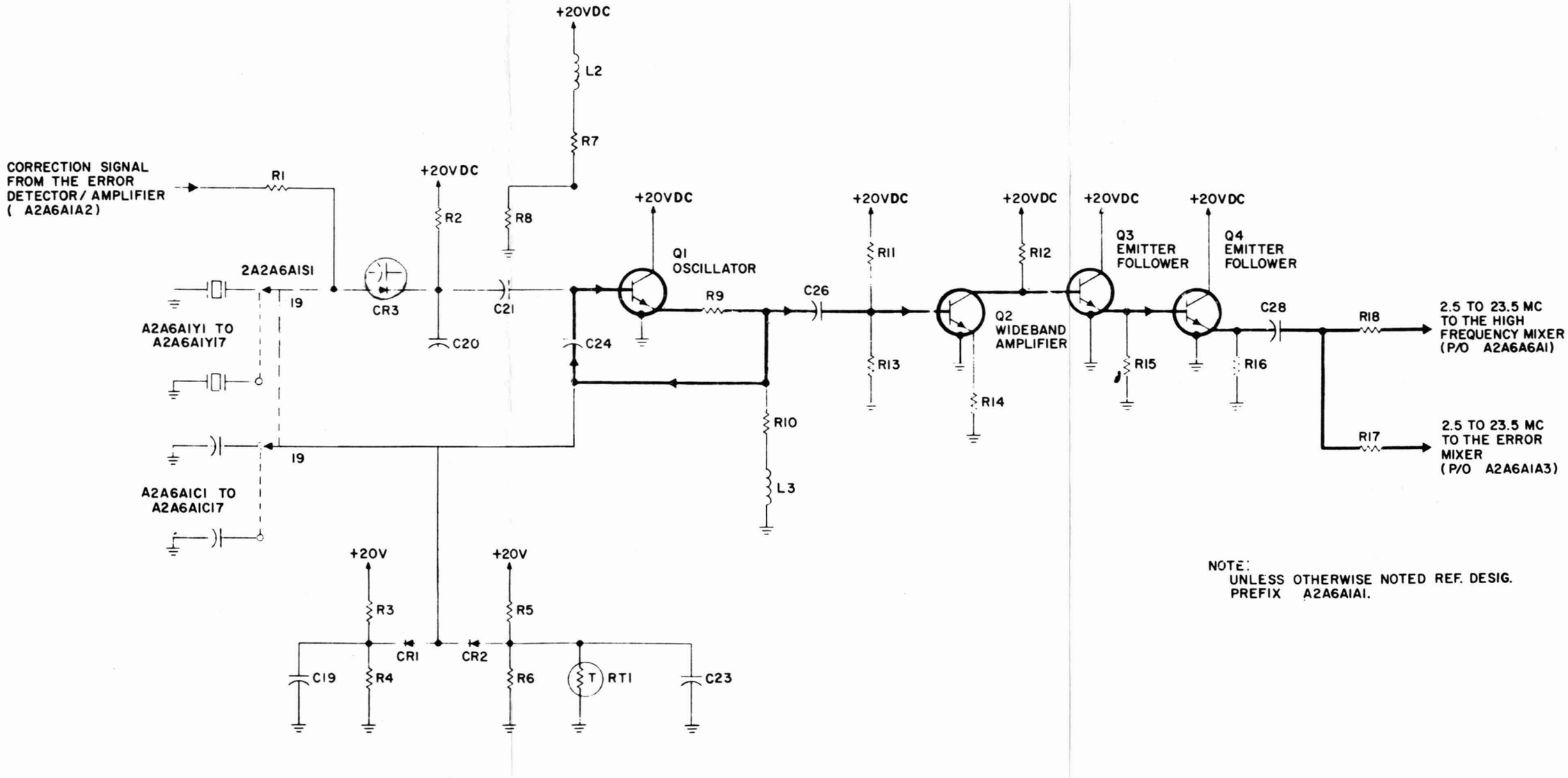

NOTE:
UNLESS OTHERWISE NOTED REF. DESIG. PREFIX A2A6A1A1.

Figure 4-17. MC Oscillator, Simplified Schematic Diagram

a. Radio Receiver R-1051/URR, Main Frame, Schematic Diagram, Figure 5-1.

b. Receiver Mode Selector Electronic Assembly, Servicing Block Diagram, Figure 4-54.

c. Receiver Mode Selector Electronic Assembly, Schematic Diagram, Figure 5-2.

d. Required Test Equipment:

(1) Multimeter, AN/PSM-4.

(2) Oscilloscope, AN/USM-105A.

(3) Electronic Multimeter, CCVO-91CA.

(4) Extender Test Cables, W2 and W3.

(5) Frequency Meter, CAQI-524D

(6) Common Electronic Circuit Test Set, TS-21351 WRC-1.

e. BFO and Amplifier, Component and Test-Point Location, Figure 5-26.

f. BFO and Amplifier, Adjustment, Paragraph 5-23.

4-149. MC OSCILLATOR, FUNCTIONAL CIRCUIT DESCRIPTION.

4-150. MC oscillator (figure 4-17) consists of an oscillator (Q1), a wideband amplifier (Q2) and two emitter followers (Q3 and Q4). These circuits, which form a part of 1 MC Synthesizer Electronic Subassembly A2A6A1, provide 17 discrete frequencies (2.5 to 23.5 mc) for use in the high frequency mixer. The following paragraphs describe the operation of the mc oscillator in detail.

4-151. Oscillator Q1 is a modified, crystal-controlled Colpitts (Pierce) oscillator used with crystals A2A6A1Y1 through A2A6A1Y17 to cover a frequency range from 2.5 to 23.5 mc in 17 discrete steps. Due to the wide range of frequencies required, it is necessary to select a capacitor (A2A6A1C1 through A2A6A1C17) in the feedback network for each crystal and thus provide a uniform output level. The oscillator feedback network consists of capacitors C21, C24, and A2A6A1C1 to A2A6A1C17, voltage variable capacitor CR3 and crystal A2A6A1Y1 to A2A6A1Y17. Voltage-variable capacitor CR3 provides the necessary control for correcting any error in the frequency of oscillator Q1. Resistor R2 references voltage-variable capacitor CR3 to 20 vdc. The error voltage from the error detector/amplifier passes through resistor R1 to voltage-variable capacitor CR3, where it changes the capacity and the resonant frequency of the circuit until the circuit is resonant at the correct frequency. Capacitor C21 is a temperature compensating capacitor, compensating for frequency variations of the oscillator resulting from temperature changes. Since capacitor C21 is in the oscillator feedback path, its temperature coefficient will affect the output amplitude of oscillator Q1. To compensate for this, a temperature compensating capacitor is used. Base bias for oscillator Q1 is developed by voltage divider L2, R7, R8. The output from oscillator Q1 is controlled by diodes CR1 and CR2. The positive-going limit for the signal is established by the cathode bias on diode CR1 (developed by voltage divider R3, R4) plus the drop of diode CR1. The negative-going limit for the signal is established by the anode bias on diode CR2 (developed by voltage divider R5, R6, RT1) minus the drop of diode CR2. Therefore, the peak-to-peak amplitude of the signal is limited by the established dc reference levels. As the temperature of the circuit varies, the forward drop of diodes CR1 and CR2 varies. Without compensation, this would result in variations in the signal amplitude. Thermistor RT1 varies the anode bias of diode CR2 according to the temperature changes. Therefore, the negative-going limit for the signal is shifted so that the limiting region is constant. This ensures that the amplitude of the signal does not vary with changes in temperature. Capacitors C19 and C23 are rf bypass capacitors. Resistor R10 provides degeneration to improve the stability of oscillator Q1. The output from oscillator Q1 is developed across emitter resistor R10 and inductor L3. The output from oscillator bandwidth and uniform gain for this stage. Emitter followers Q3 and Q4 are cascaded, direct-coupled emitter followers that provide the required low source impedance for driving the error loop and the high frequency mixer. Q1 is coupled to the base of wideband amplifier Q2 by capacitor C26.

4-152. The base bias for wideband amplifier Q2 is developed by voltage divider R11, R13 from the positive 20 vdc. Emitter resistor R14 is unbypassed to provide the necessary degeneration and thereby to produce a wide

Capacitor C28 couples the signal from emitter resistor R16 to the high frequency mixer. Resistors R17 and R18 are isolating resistors.

4-153. MC OSCILLATOR, TEST DATA.

4-154. Pertinent references and applicable test data for the mc oscillator are as follows:

a. Radio Receiver R-1051/URR, Main Frame, Schematic Diagram, Figure 5-1.

b. 1 MC Synthesizer Electronic Subassembly, Servicing Block Diagram, Figure 4-61.

c. 1 MC Synthesizer Electronic Subassembly, Schematic Diagram, Figure 5-6.

d. MC Oscillator, Component Location, Figure 5-67.

e. Required Test Equipment:

(1) Frequency Meter, CAQI-524A.

(2) Electronic Multimeter, CCVO-91CH.

(3) Oscilloscope, AN/USM-105A.

(4) Heterodyne Voltmeter, Bruel and Kjaer, 2005.

(5) Translator/Synthesizer Test Set, TS-2133/WRC-1.

(6) Multimeter, AN/PSM-4.

4-155. 4.553 TO 5.453 MC OSCILLATOR, FUNCTIONAL CIRCUIT DESCRIPTION.

4-156. The 4.553 to 5.453 mc oscillator (figure 4-18) consists of a 100 kcs (KCS) crystal switch (A2A6A2S1), a limiter (CR1, CR2), an oscillator (Q1), and an emitter follower (Q2). These circuits, which form a part of 100 KC Synthesizer Electronic Subassembly A2A6A2, produce one of ten outputs in 100 kc steps over the frequency range of 4.553 through 5.453 mc for use in the hi-band/lo-band mixer/amplifier (A2A6A2A4) and the 10.747 mc mixer (A2A6A2A2). These circuits are used in all modes of operation. The following paragraphs describe the operation of the 4.553 to 5.453 mc oscillator in detail.

4-157. The operating voltage for the 4.553 to 5.453 mc oscillator is derived from main frame power supply A2A8. Resistor R12 and capacitor C8 provide decoupling to prevent any interaction with other circuits connected to the positive 20 vdc supply line. Base bias for oscillator Q1 is developed by voltage divider R5, R7. The output frequency of oscillator Q1 is determined by the setting of the 100 kcs (KCS) switch on the front panel. Switch A2A6A2S1 connects the correct crystal (A2A6Y1 through A2A6Y10) into the circuit of oscillator Q1 according to the desired 100 kc digit of the operating frequency. The output of oscillator Q1 is controlled by diodes CR1 and CR2. The negative-going limit for the signal is established by the anode bias on diode CR1 (developed by voltage divider R1, R2, RT1)

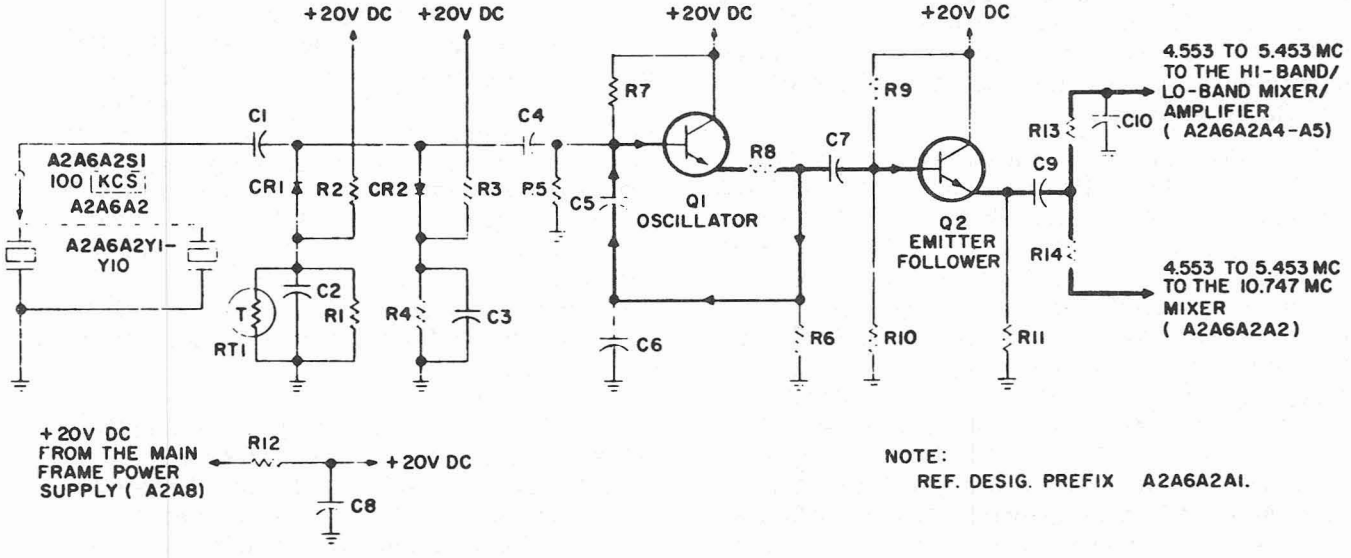

Figure 4-18. 4.553 to 5.453 MC Oscillator, Simplified Schematic Diagram

minus the drop of diode CR1. The positive-going limit for the signal is established by the cathode bias on diode CR2 (developed by voltage divider R3, R4) plus the drop of diode CR2. Therefore, the peak-to-peak amplitude of the signal is limited by the established dc reference levels. As the temperature of the circuit varies, the forward drop of diodes CR1 and CR2 varies. Without compensation, this would result in variations in the signal amplitude. Thermistor RT1 varies the anode bias of diode CR1 according to the temperature changes. Therefore, the negative-going limit for the signal is shifted so that the limiting region is constant. This ensures that the amplitude of the signal does not vary with changes in temperature. Capacitors C2 and C3 are rf bypass capacitors. Capacitor C4 is used for dc blocking and is also used with capacitors C1, C5, and C6 to form the required feedback network. Resistor R8 provides degeneration to increase the stability of oscillator Q1. The output of oscillator Q1 is developed across emitter resistor R6, and is coupled to the base of emitter follower Q2 by capacitor C7.

4-158. The base-bias for emitter follower Q2 is developed by voltage divider R9, R10 from the positive 20 vdc. Emitter follower Q2 is used to isolate the oscillator from the succeeding circuits. The output of emitter follower Q2 is developed across emitter resistor R11 and is coupled to the hi-band/lo-band mixer/amplifier and to the 10.747 mc mixer by capacitor C9. Resistors R13 and R14 are isolating resistors. Capacitor C10 provides a low impedance to ground for the other signals used in the hi-band/lo-band mixer/amplifier, thus preventing them from being coupled into the 10.747 mc mixer.

4-159. 4.553 to 4.453 MC OSCILLATOR, TEST DATA.

4-160. Pertinent references and applicable test data for the 4.553 to 5.453 mc oscillator are as follows:

a. Radio Receiver R-1051/URR, Main Frame, Schematic Diagram, Figure 5-1.

b. 100 KC Synthesizer Electronic Subassembly, Servicing Block Diagram, Figure 4-60.

c. 100 KC Synthesizer Electronic Subassembly, Schematic Diagram, Figure 5-7.

d. 4.553 to 5.453 MC Oscillator, Component Location, Figure 5-74.

e. Required Test Equipment:

(1) Frequency Meter, CAQI-524D

(2) Electronic Multimeter, CCVO-91CA.

(3) Oscilloscope, AN/USM-105A.

(4) Heterodyne Voltmeter, Bruel and Kjaer, 2005.

(5) Translator/Synthesizer Test Set, TS-2133/WRC-1.

(6) Multimeter, AN/PSM-4.

4-161. HI-BAND/LO-BAND MIXER/AMPLIFIER, FUNCTIONAL CIRCUIT DESCRIPTION.

4-162. The hi-band/lo-band mixer/amplifier (figure 4-19) consists of two mixers (A4Q1 and A4Q2), two trap amplifiers (A4Q3 and A4Q4), and an emitter follower (A5Q1). These circuits, which form a part of 100 KC Synthesizer Electronic Subassembly A2A6A2, produce either a high (hi) band of injection frequencies (32.4 to 33.3 mc) or a low (lo) band of injection frequencies (22.4 to 23.3 mc), which is used in the mid-frequency mixer of RF Translator Electronic Subassembly A2A6A6. The output of these circuits is also used in 10.747 mc mixer AGC circuit A2A6A2A5 to develop the agc voltage for controlling the gain of 10.747 mc mixer A2A6A2A2. These circuits are used in all modes of operation. The following paragraphs describe the operation of the hi-band/lo-band mixer/amplifier in detail.

4-163. Only one-half of the hi-band/lo-band mixer/amplifier circuits are on at any one time, depending on whether the hi (32.4 to 33.3 mc) or lo (22.4 to 23.3 mc) band is required for mixing in RF Translator Electronic Subassembly A2A6A6. The hi-band circuits will be discussed first. Unless otherwise noted, all components referenced are located on the A4 assembly.

4-164. The 27.847 mc output from the 17.847/27.847 mc mixer is coupled to the base of mixer Q1 by capacitor C22. The output from the 4.553 to 5.453 mc oscillator is coupled to

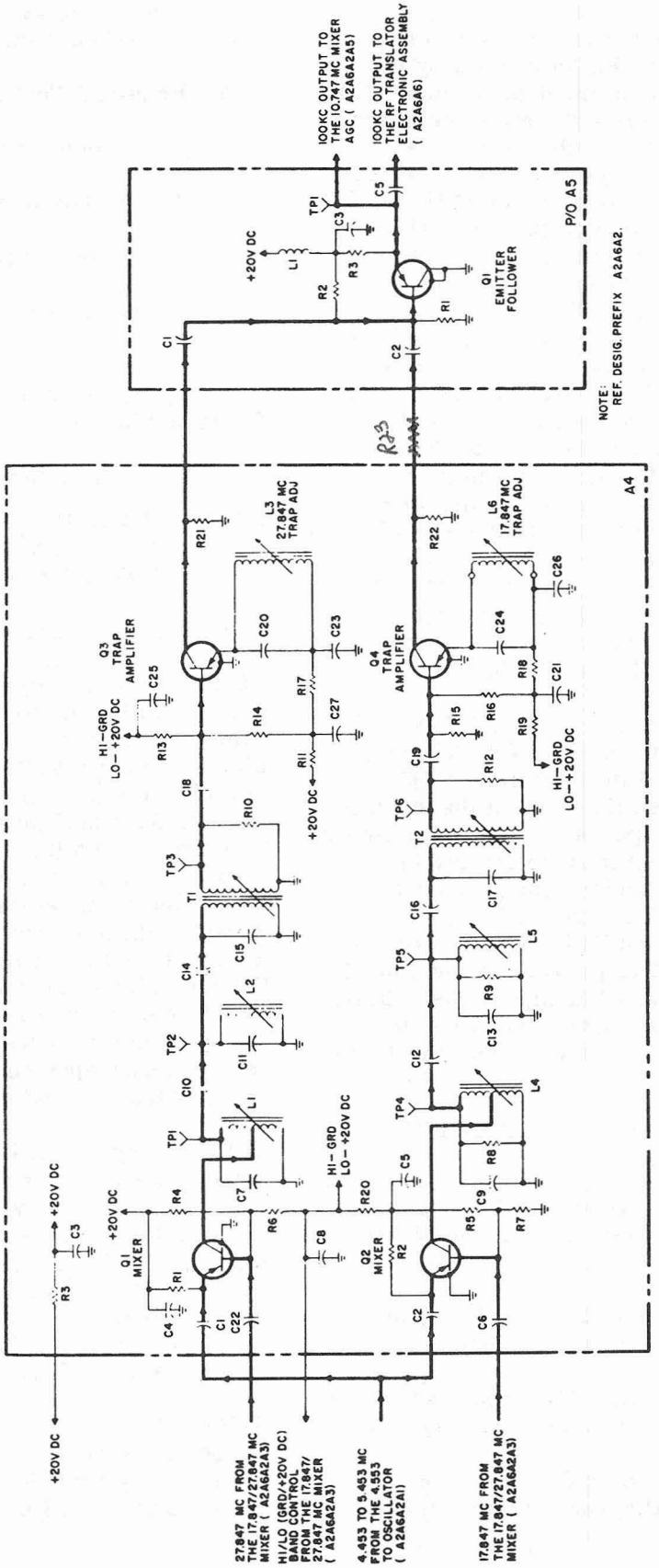

Figure 4-19. Hi-Band/Lo-Band Mixer/Amplifier, Simplified Schematic Diagram

the emitter of mixer Q1 by capacitor C1. When the hi/lo band control line is at ground potential, base-bias will be provided for mixer Q1 and trap amplifier Q3 by voltage divider R4, R6 and voltage divider R13, R14, respectively. Resistor R1 is the emitter resistor. Capacitor C4 is an rf bypass capacitor. At the same time, mixer Q2 and trap amplifier Q4 will be rendered inoperative by the ground potentials applied to the emitter-base bias circuits from the hi/lo band control line. The output from mixer Q1 is a frequency in the band from 32.4 mc to 33.3 mc. All other products of the mixer, except for a small amount of the 27.847 mc, are eliminated by the triple-tuned filter composed of inductors L1 and L2, transformer T1 and capacitors C7, C10, C11, C14 and C15. From the triple-tuned filter, the signal is coupled through capacitor C18 to the base of amplifier Q3. The emitter circuit of trap amplifier Q3 (capacitor C20 and inductor L3) is parallel-tuned to 27.847 mc. At 27.847 mc, the trap provides degeneration to eliminate effectively the 27.847 mc from the output signal. Resistor R11 and capacitor C27 provide decoupling for trap amplifier QB. Resistor R17 is the emitter bias resistor, which is rf bypassed by capacitor C23. The output of trap amplifier Q3 is developed across resistor R21 and is coupled by capacitor A5C1 to the base of emitter follower A5Q1. Base bias for emitter follower Q1 is provided by voltage divider A5R1, A5R2. Inductor A5L1 and A5C3 provide the necessary filtering for the 20 vdc line voltage. The output of emitter follower A5Q1 is developed across emitter resistor A5R3 and is coupled by capacitor A5C5 to the mid-frequency mixer of RF Translator Electronic Subassembly A2A6H6. The output of emitter follower A5Q1 is also applied to 10.747 mc mixer AGC A2A6A2A5.

4-165. The lo-band circuits are identical to the hi-band circuits. When the hi/lo band control line is at +20 vdc, operating voltages are applied to the emitter and bases of mixer Q2 and trap amplifier Q4. At the same time, the +20 vdc is applied to the bases of mixer Q1 and trap amplifier Q3, thereby providing back-bias for the transistors, since the emitters are at +20 vdc also. The 17.847 mc output from the 17.847 mc mixer is coupled to the base of mixer Q2 by capacitor C6. The output from the 4.553 to 5.453 mc oscillator is coupled to the emitter of mixer Q2 by capacitor C2. The output of mixer Q2 is a frequency in the band from 22.4 to 23.3 mc. All other products of the mixer, except for a small amount of 17.847 mc, are eliminated by the triple-tuned filter composed of inductors L4 and L5, transformer T2 and capacitors C9, C12, C13, and C16, and C17. From the triple-tuned filter, the signal is coupled by capacitor C19 to the base of trap amplifier Q4. The emitter circuit of trap amplifier Q4 is parallel-tuned to 17.847 mc to eliminate the 17.847 mc signal. The output of trap amplifier Q4 is coupled by capacitor A5C2 to the base of emitter follower A5Q1. The output of emitter follower A5Q1 is applied to 10.747 mc mixer AGC A2A6A2A5 and the mid-frequency mixer in the RF Translator Electronic Subassembly A2A6A6.

4-166. HI-BAND/LO-BAND MIXER/AMPLIFIER, TEST DATA.

4-167. Pertinent references and applicable test data for the hi-band/lo-band mixer/amplifier circuit are as follows:

a. Radio Receiver R-1051/URR, Main Frame, Figure 5-1.

b. 100 KC Synthesizer Electronic Subassembly, Servicing Block Diagram, Figure 4-60.

c. 100 KC Synthesizer Electronic Subassembly, Schematic Diagram, Figure 5-7.

d. Hi-Band/Lo-Band Mixer/Amplifier, Component and Test-Point Location, Figure 5-76.

e. 10.747 MC Mixer AGC, Component and Test-Point Location, Figure 5-80.

f. Required Test Equipment:

(1) RF Signal Generator, CAQI-606A.

(2) Electronic Multimeter, CCVO-91CA.

(3) Oscilloscope, AN/USM-105A.

(4) Heterodyne Voltmeter, Bruel and Kjaer, 2005.

(5) Translator/Synthesizer Test Set, TS-2133/WRC-1.

(6) Multimeter, AN/PSM-4.

g. Refer to paragraph 3-32 in Technical Manual for Repair of AN/WRC-1 and R-1051/

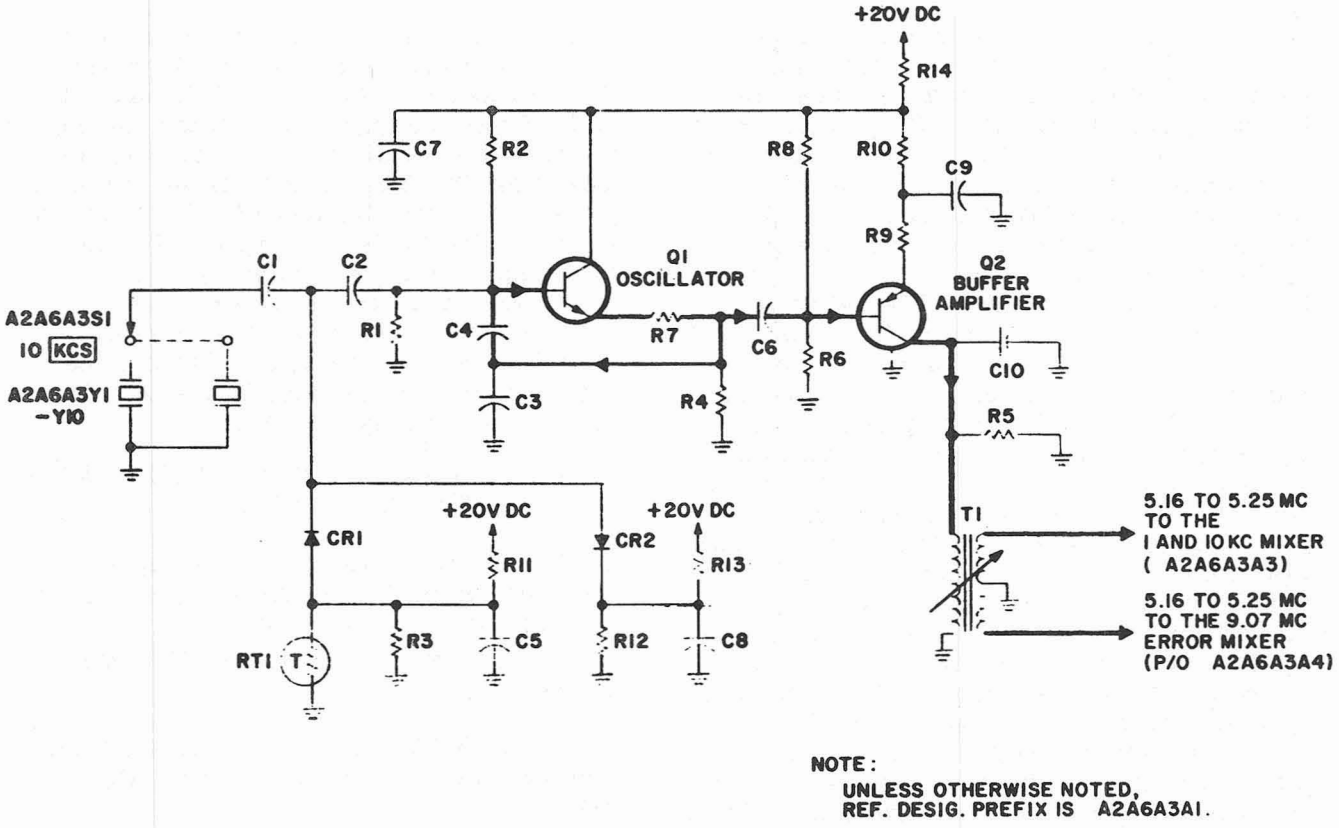

Figure 4-20. 5.16 to 5.25 MC Oscillator, Simplified Schematic Diagram

URR 2N Modules, NAVSHIPS 95700, for hi-band/lo-band mixer/amplifier adjustment procedures.

4-168. 5.16 TO 5.25 MC OSCILLATOR, FUNCTIONAL CIRCUIT DESCRIPTION.

4-169. The 5.16 to 5.25 mc oscillator (figure 4-20) consists of 10 kc (KCS) crystal switch A2A6A3S1, a limiter circuit (CR1, CR2), an oscillator (Q1), and a buffer amplifier (Q2). These circuits, which form a part of 1 and 10 KC Synthesizer Electronic Subassembly A2A6A3, produce one of ten outputs in 10 kc steps over the frequency range of 5.16 through 5.25 mc for use in the 1 and 10 kc output mixer (A2A6A3A3), and the 9.07 mc error mixer (A2A6A3A4). These circuits function in all modes of operation. The following paragraphs describe the operation of the 5.16 to 5.25 mc oscillator in detail.

4-170. The operating frequency of the modified, crystal-controlled Colpitts (Pierce) oscillator (Q1) is determined by the selection of one of ten crystals (A2A6A3Y1 through Y10) by switch A2A6A3S1. Selection is accomplished by positioning the 10 kc (KCS) control located on the front panel. Operating voltage for the oscillator is derived from main frame power supply A2A8. Base bias for oscillator Q1 is developed by voltage divider R1, R2. The output of oscillator Q1 is controlled by diodes CR1 and CR2. The negative-going limit for the signal is established by the anode bias on diode CR1 (developed by voltage divider R3, R11, RT1) minus the drop of diode CR1. The positive-going limit for the signal is established by the cathode bias on diode CR2 (developed by voltage divider R12, R13) plus the drop of diode CR2. Therefore, the peak-to-peak amplitude of the signal is limited by the established dc reference levels. As the temperature of the circuit varies, the forward drop of diodes CR1 and CR2 varies. Without compensation, this would result in variations in the signal amplitude. Thermistor RT1 varies the anode bias of CR1 according to the temperature changes. Therefore, the negative-going limit for the signal is shifted so that the limiting region is constant. This ensures that the amplitude of the signal does not vary with changes in temperature. Capacitors C5 and C8 are rf bypass capacitors. Capacitor C2 is used for dc blocking and is also used with capacitors C1, C3 and C4 to form the required feedback network. Resistor R7

provides degeneration to increase the stability of oscillator Q1. The output of oscillator Q1 is developed across emitter resistor R4 and is coupled to the base of buffer amplifier Q2 by capacitor C6.

4-171. The base bias for buffer amplifier Q2 is developed by voltage divider R6, R8 from the positive 20 vdc. A resonant circuit consisting of the primary of transformer T1 and capacitor C10 provides the collector load for the amplifier. Resistor R5 loads the tank circuit to provide uniform gain over the range of frequencies developed by the oscillator. Resistor R9 in the emitter circuit provides degenerative feedback to stabilize the gain and increase the input impedance of amplifier Q2, thereby, preventing loading of oscillator Q1. Resistor R10 is the emitter bias resistor, which is rf bypassed by capacitor C9. Resistor R14 and capacitor C7 provide decoupling for oscillator Q1 and buffer amplifier Q2. The output from amplifier Q2 is coupled to the 1 and 10 kc mixer circuit and to the 9.07 mc error mixer circuit by the secondary of transformer T1.

4-172. 5.16 TO 5.25 MC OSCILLATOR, TEST DATA.

4-173. Pertinent references and applicable test data for the 5.16 to 5.25 mc oscillator are as follows:

a. Radio Receiver R-1051/URR, Main Frame, Schematic Diagram, Figure 5-1.

b. 1 and 10 KC Electronic Subassembly, Servicing Block Diagram, Figure 4-59.

c. 1 and 10 KC Electronic Subassembly, Schematic Diagram, Figure 5-8.

d. 5.16 to 5.25 MC Oscillator, Component and Test-Point Location, Figure 5-82.

e. Required Test Equipment:

(1) Frequency Meter, CAQI-524D.

(2) Electronic Multimeter, CCVO-91CA.

(3) Oscilloscope, AN/USM-105A.

(4) Multimeter, AN/PSM-4

(5) Heterodyne Voltmeter, Bruel and Kjaer, 2005.

(6) Translator/Synthesizer Test Set, TS-2133/WRC-1.

f. Refer to paragraph 3-28 in Technical Manual for Repair of AN/WRC-1 and R-1051/URR 2N Modules, NAVSHIPS 95700, for 5.16 to 5.25 mc oscillator adjustment procedures.

4-174. 1.850 TO 1.859 MC OSCILLATOR, FUNCTIONAL CIRCUIT DESCRIPTION.

4-175. The 1.850 to 1.859 mc oscillator (figure 4-21) consists of 1 kcs (KCS) crystal switch (A2A6A3S2), a limiter (CR1, CR2), an oscillator (Q1), and a buffer amplifier (Q2). These circuits, which form a part of 1 and 10 KC Synthesizer Electronic Subassembly A2A6A3, produce 1 of 10 outputs in 1 kc steps over the frequency range of 1.850 through 1.859 mc for use in the 1 and 10 kc output mixer (A2A6A3A3) and the 9.07 mc error mixer (A2A6A3A4). These circuits function in all modes of operation. The operation of the 1.850 to 1.859 mc oscillator is identical to that of the 5.16 to 5.25 mc oscillator. (Refer to paragraphs 4-170 and 4-171 for a detailed description of circuit operation.)

4-176. 1.850 TO 1.859 MC OSCILLATOR, TEST DATA.

4-177. Pertinent references and applicable test data for the 1.850 to 1.859 mc oscillator are as follows:

a. Radio Receiver R-1051/URR, Main Frame, Schematic Diagram, Figure 5-1.

b. 1 and 10 KC Synthesizer Electronic Subassembly, Servicing Block Diagram, Figure 4-59.

c. 1 and 10 KC Synthesizer Electronic Subassembly, Schematic Diagram, Figure 5-8.

d. 1.850 to 1.859 MC Oscillator, Component and Test-Point Location, Figure 5-83.

e. Required Test Equipment:

(1) Frequency Meter, CAQI-524D.

(2) Electronic Multimeter, CCVO-91CA.

(3) Oscilloscope, AN/USM-105A.

(4) Multimeter, AN/PSM-4.

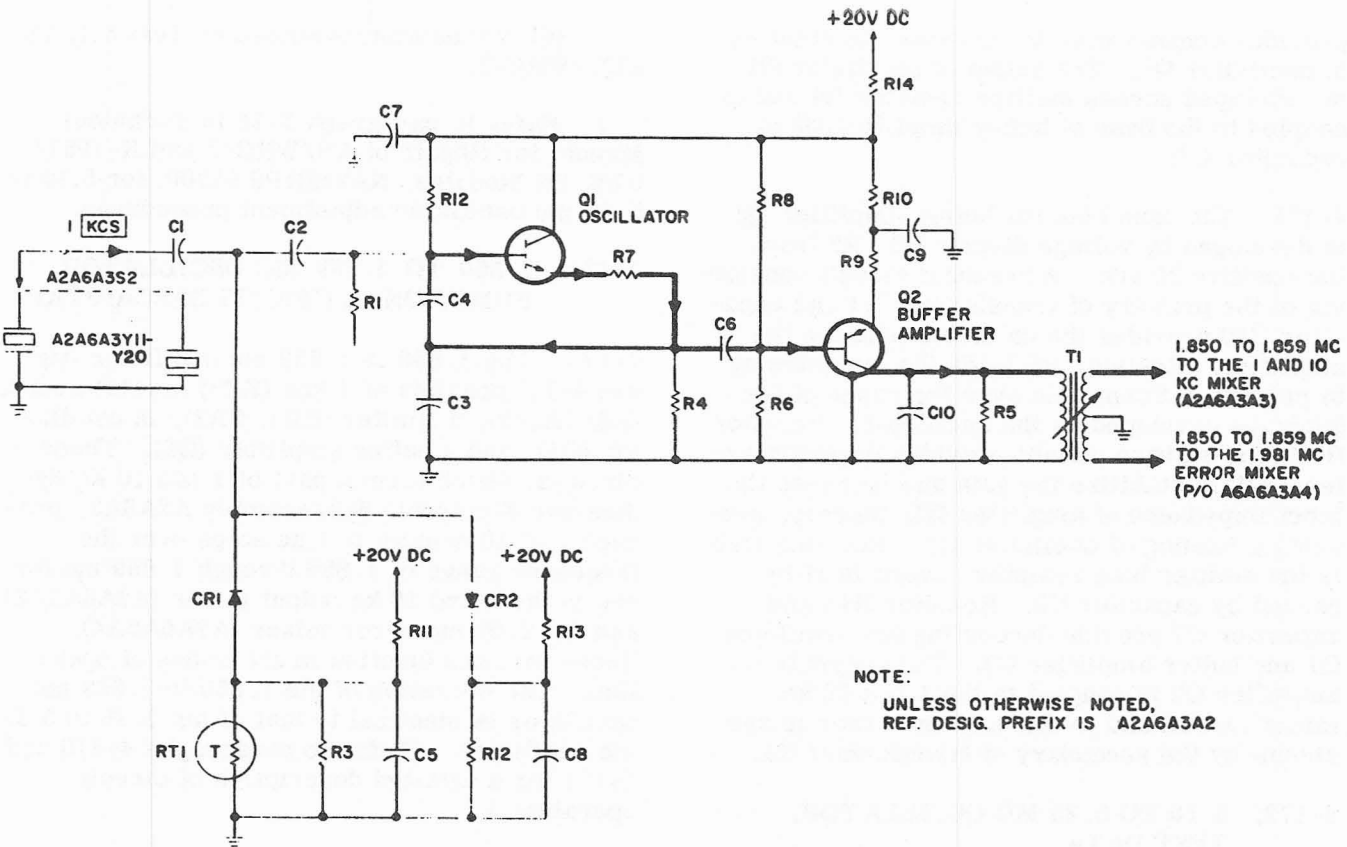

Figure 4-21. 1.850 to 1.859 MC Oscillator, Simplified Schematic Diagram

(5) Heterodyne Voltmeter, Bruel and Kjaer, 2005.

(6) Translator/Synthesizer Test Set, TS-2133/WRC-1.

f. Refer to paragraph 3-28 in Technical Manual for Repair of AN/WRC-1 and R-1051/URR 2N Modules; NAVSHIPS 95700, for 1.850 to 1.859 mc oscillator adjustment procedures.

4-178. 1 AND 10 KC MIXER, FUNCTIONAL CIRCUIT DESCRIPTION.

4-179. The 1 and 10 kc mixer circuit (figure 4-22) consists of a mixer (Q11) and a four section filter (C48-L5, C49-L6, C51-L7, and C54 and the primary of transformer T3 with coupling capacitors C56, C50 and C52). A noise blanker control (Q12) is also included but is not used with the AN/WRC-1 system. These circuits, which form a part of 1 and 10 KC Synthesizer Electronic Subassembly A2A6A3, subtractively mix the signal from the 1.850 to 1.859 mc oscillator with the signal from the 5.16 to 5.25 mc oscillator, producing the 1 and 10 kc injection signal (3.301 to 3.400 mc in 1 kc steps) for use in the low frequency mixer. The following paragraphs describe the operation of the circuits in detail.

4-180. The signal from the 1.850 to 1.859 mc oscillator is applied through resistor A2A6A3A2R16 to resistor A2A6A3A1R16. The signal from the 5.16 to 5.25 mc oscillator is also coupled to resistor A2A6A3A1R16 through capacitor A2A6A3A1C11. Capacitor A2A6A3A1C11 provides a low impedance to the 5.16 to 5.25 mc signal and a high impedance to the 1.850 to 1.859 mc signal. Therefore, the 5.16 to 5.25 mc oscillator will not load the 1.850 to 1.859 mc signal. The two input signals are coupled from resistor A2A6A3A1R16 through capacitor C55 to the base of mixer Q11. The base bias is provided by voltage divider R47, R54. Resistor R52 provides a small amount of degeneration to improve the stability of mixer Q11. Resistor R48 is the emitter bias resistor, which is rf bypassed by capacitor C47. Resistor R49 and capacitor C46 provide decoupling for mixer Q11. The output circuit of mixer Q11 is a four sec-

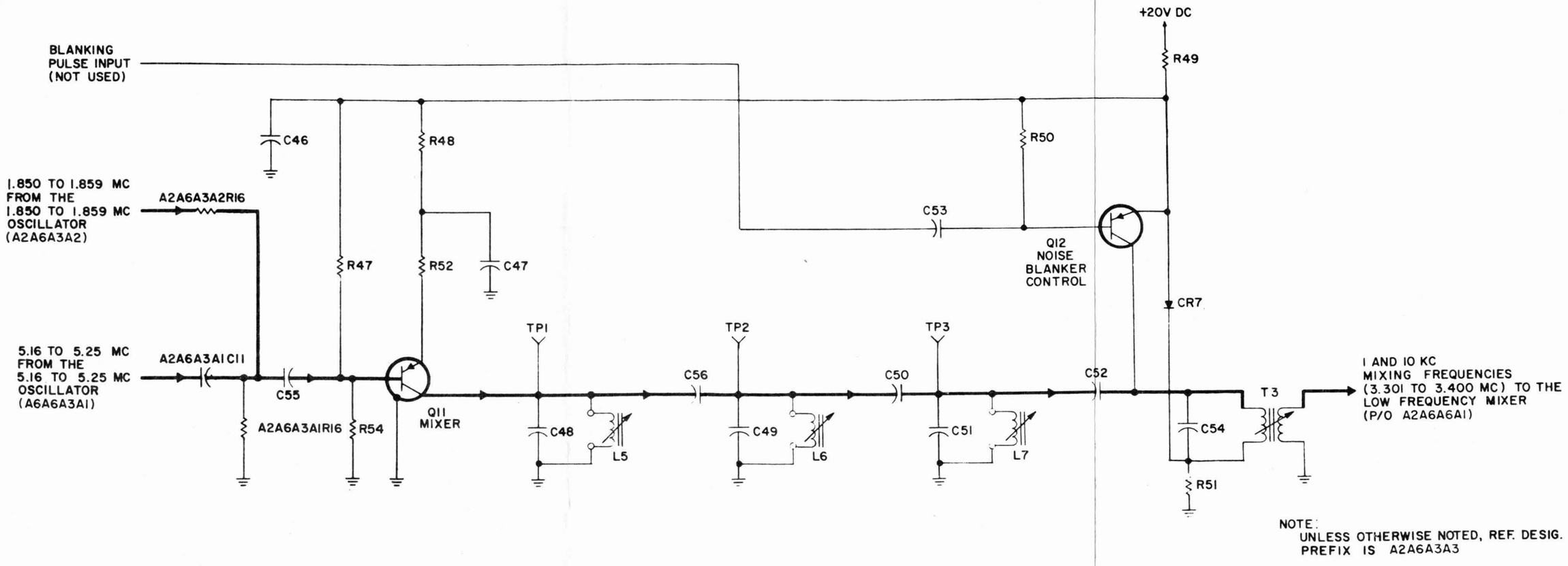

Figure 4-22. 1 and 10 KC Mixer, Simplified Schematic Diagram

tion filter. The filter has a bandwidth of 100 kc (3.3 to 3.4 mc) and sufficient selectivity to attenuate any frequency outside this band. Capacitors C56, C50 and C52 are an integral part of the filter and couple the signal between sections of the filter. Therefore, the four section filter will pass only the difference of the 1.850 to 1.859 mc and 5.16 to 5.25 mc signals (3.301 to 3.400 mc in 1 kc steps). The signal from the four section filter is coupled through transformer T3 and applied to the low frequency mixer.

4-181. If used, noise blanker control Q12 functions as a switch that gates the output from the 1 and 10 kc mixer at a rate and for a duration determined by the pulse received at the input. During the absence of a pulse, diode CR7 references the primary of transformer T3 at a level of about 18.8 vdc. During this time, noise blanker control Q12 is not conducting; therefore, the emitter and collector will be at about 20 vdc and 18.8 vdc, respectively. When a negative pulse arrives at the base of noise blanker control Q12, the transistor is driven into saturation, thus creating a low impedance path from the junction of capacitors C52 and C54 to ac ground for the duration of the pulse. This means that the signal at the junction of capacitors C52 and C54 is essentially shorted to ac ground for the duration of the pulse.

4-182. 1 AND 10 KC MIXER, TEST DATA.

4-183. Pertinent references and applicable test data for the 1 and 10 kc mixer are as follows:

a. Radio Receiver R-1051/URR, Main Frame, Schematic Diagram, Figure 5-1.

b. 1 and 10 KC Synthesizer Electronic Subassembly, Servicing Block Diagram, Figure 4-59.

c. 1 and 10 KC Synthesizer Electronic Subassembly, Schematic Diagram, Figure 5-8.

d. 1 and 10 KC Synthesizer Output, Component and Test-Point Location, Figure 5-86.

e. Required Test Equipment:

(1) RF Signal Generator, CAQI-606A.

(2) Electronic Multimeter, CCVO-91CA.

(3) Oscilloscope, AN/USM-105A.

(4) Heterodyne Voltmeter, Bruel and Kjaer, 2005.

(5) Multimeter, AN/PSM-4.

(6) Translator/Synthesizer Test Set, TS-2133/WRC-1.

f. Refer to paragraph 3-28 in Technical Manual for Repair of AN/WRC-1 and R-1051/URR 2N Modules, NAVSHIPS 95700, for 1 and 10 kc mixer adjustment procedures.

4-184. MC SPECTRUM GENERATOR, FUNCTIONAL CIRCUIT DESCRIPTION.

4-185. The mc spectrum generator (figure 4-23) consists of three shaper amplifiers (Q1, Q2 and Q3). These circuits, which form a part of 1 MC Synthesizer Electronic Subassembly A2A6A1, provide a spectrum of frequencies from 1 to 25 mc in 1 mc steps for use in the mc error mixer. The following paragraphs describe the operation of the circuits in detail.

4-186. These circuits operate from the positive 10 vdc derived by zener diode CR1 and series resistor R1 from the positive 20 vdc. The 1 mc input is applied to inductor L2 through resistor R33. Resistor R33 prevents loading of the 5 mc divide-by-five circuit. Inductor L2 functions as an autotransformer, raising the level of the 1 mc signal and applying it to the diode clipper consisting of diode CR3 and resistor R5. Inductor L2 is tuned to 1 mc by capacitor C3. The diode clipper removes the positive portion of the 1 mc signal. The remaining negative portion is coupled through capacitor C2 to the base of shaper amplifier Q1, driving it into saturation. Diode CR2 protects shaper amplifier Q1 against excessive reverse bias on the base-emitter junction. When the base voltage attempts to go more positive than the emitter voltage, diode CR2 will be forward-biased, thereby clamping the base voltage. The emitter voltage is determined by voltage divider R3, R4, and by the average current drawn by the emitter of shaper amplifier Q1. The output of the shaper amplifier, which is a positive-going waveform with a fast rise time, is developed across collector resistor R6 and is applied through capacitor C5 to the base of shaper amplifier Q2. This positive-going waveform drives shaper amplifier Q2 into saturation, producing a negative going waveform at its collector. Capacitor C6

provides emitter peaking, which results in an overshoot on the output waveform. The output of shaper amplifier Q2 is coupled through capacitor C8 to the base of shaper amplifier Q3. Due to the time constant formed by the output impedance of shaper amplifier Q2, capacitor C8, and the input impedance of shaper amplifier Q3, the output of shaper amplifier Q2 is differentiated at the base of shaper amplifier Q3. The negative-going portion of this signal drives shaper amplifier Q3 into saturation. Diode CR4, like diode CR2, is used as a protective device and is also used to clamp the positive portion of the input signal. Resistor R15 is used to limit the collector current and to minimize the variations in the saturation characteristics of shaper amplifier Q3. The output of shaper amplifier Q3 is developed across an LR differentiating network consisting of resistor R15 and inductor L3. The output of shaper amplifier Q3 is taken across inductor L3. The network consisting of diode CR5, resistor R17 and resistor R22 form a diode clipper circuit eliminating the negative portion of the output across inductor L3. Resistors R17 and R22 also form an attenuator with the output taken across resistor R22. The output obtained is a positive pulse that provides a uniform spectrum from 1 mc to 25 mc. This output is applied to the mc error mixer.

4-187. MC SPECTRUM GENERATOR, TEST DATA.

4-188. Pertinent references and applicable test data for the mc spectrum generator are as follows:

a. Radio Receiver R-1051/URR, Main Frame, Schematic Diagram, Figure 5-1.

b. 1 MC Synthesizer Electronic Subassembly, Servicing Block Diagram, Figure 4-61.

c. 1 MC Synthesizer Electronic Subassembly, Schematic Diagram, Figure 5-6.

d. Spectrum Generator/Mixer, Component and Test-Point Location, Figure 5-70.

e. Required Test Equipment:

(1) RF Signal Generator, CAQI-606A.

(2) Electronic Multimeter, CCVO-91CA.

(3) Oscilloscope, AN/USM-105A.

(4) Multimeter, AN/PSM-4.

(5) Heterodyne Voltmeter, Bruel and Kjaer, 2005.

(6) Translator/Synthesizer Test Set, TS-2133/WRC-1.

f. Refer to paragraph 3-34 in Technical Manual for Repair of AN/WRC-1 and R-1051/URR 2N Modules, NAVSHIPS 95700, for mc spectrum generator adjustment procedures.

4-189. MC ERROR MIXER, FUNCTIONAL CIRCUIT DESCRIPTION.

4-190. The MC error mixer (figure 4-24) consists of an isolation amplifier (Q5), an emitter follower (Q6), and a mixer (Q4). These circuits, which form a part of 1 MC Synthesizer Electronic Subassembly A2A6A1, mix the signal from the mc oscillator with the signal from the mc spectrum generator. This results in an error signal, which in the locked condition is proportional to the phase relationship between the spectrum and the oscillator. The following paragraphs describe the operation of the circuits in detail.

4-191. The input from the mc oscillator is coupled through capacitor C18 to the emitter of isolation amplifier Q5. Isolation amplifier Q5 is used in a grounded-base amplifier configuration, which provides a high reverse attenuation to the output products of mixer Q4, thereby preventing them from appearing in the output from the mc oscillator. Base bias for isolation amplifier Q5 is provided by voltage divider R27, R28. Resistor R30 and capacitor C20 are used for decoupling. The output of isolation amplifier Q5 is taken across collector resistor R29 and is coupled through capacitor C14 to the base of emitter follower Q6. Base bias for emitter follower Q6 is provided by voltage divider R23, R24. Resistor R31 and capacitor C12 are used for decoupling. Emitter follower Q6 provides a low source impedance to mixer Q4 and prevents loading of isolation amplifier Q5. The output of emitter follower Q6 is coupled through capacitor C13 to the emitter of mixer Q4. The signal from the mc spectrum generator is coupled through capacitor C9 to the base of mixer Q4. Base bias for mixer Q4 is provided by voltage divider R18, R21. Resistor R20 provides a small amount of degeneration to stabilize mixer Q4. The output of mixer Q4 is a double-tuned cir-

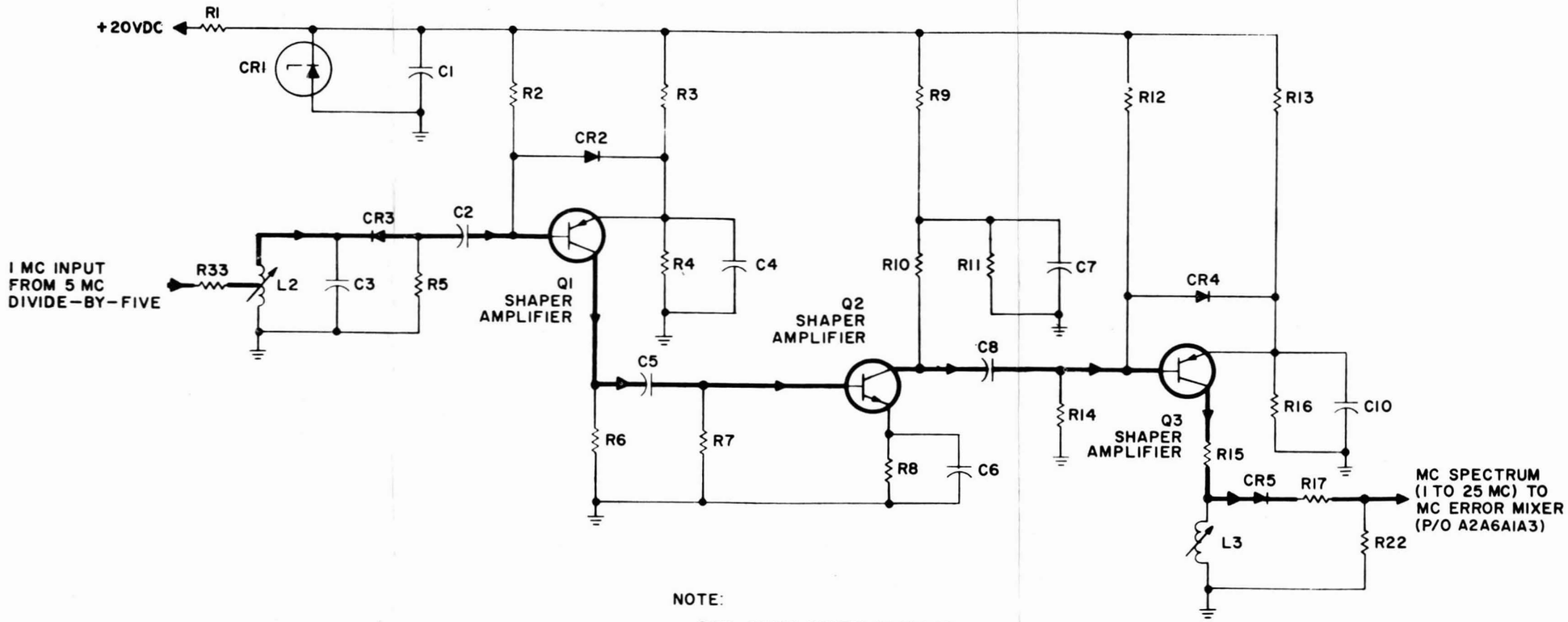

NOTE:
REF. DESIG. PREFIX A2A6A1A3.

Figure 4-23. MC Spectrum Generator, Simplified Schematic Diagram

CAUTION

When making resistance checks at semi-conductor devices, use only the higher scales of the multimeter so as to avoid unintentional damage to the semi-conductor device due to the meters internal voltage.

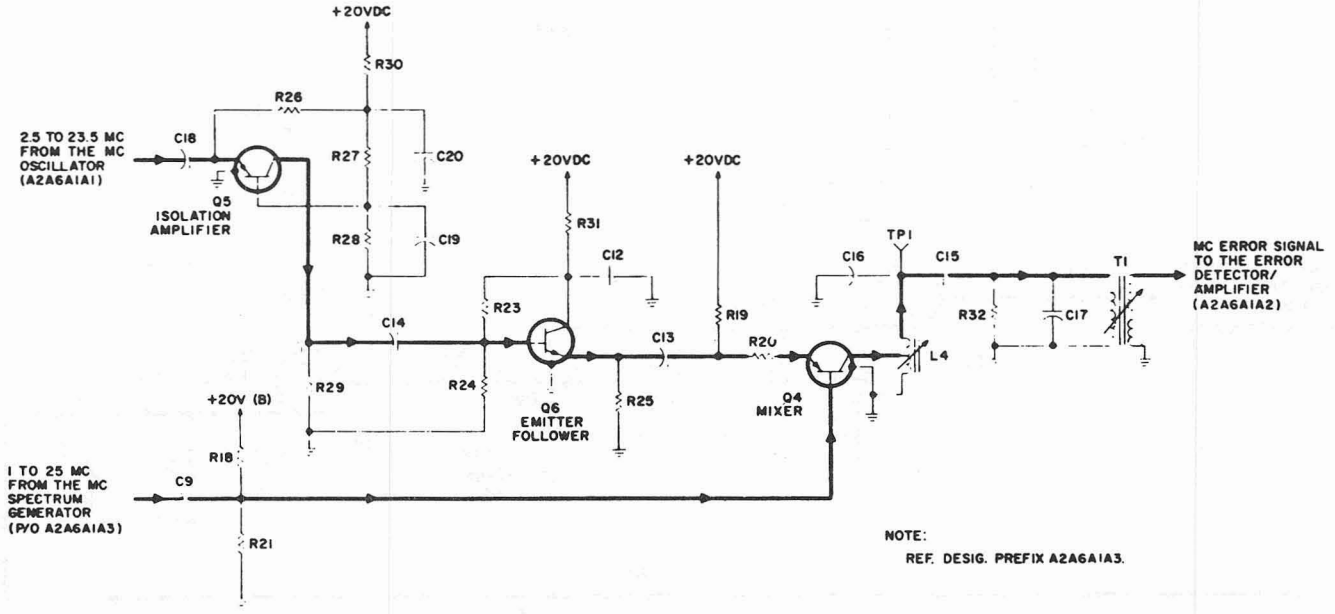

Figure 4-24. MC Error Mixer, Simplified Schematic Diagram

cuit consisting of inductor L4, capacitors C16, C15, and C17, resistor R32, and transformer T1, which is tuned to 1.5 mc. When there is a frequency error, the signal from the mc oscillator is mixed with the two spectrum points that are within ±1.5 mc of the oscillator frequency. The output of mixer Q4 consists of two frequencies (one less than 1.5 mc and one more than 1.5 mc), if the mc oscillator has an error. When the mc oscillator is locked, only one frequency is present, since the frequency of the oscillator ± the spectrum points is 1.5 mc. To understand this more readily, assume that the mc oscillator frequency is 11.499 mc; therefore, the two closest spectrum points will be 10 and 13 mc, which when mixed will produce difference frequencies of 1.499 and 1.501 mc. It can be seen that when the mc oscillator frequency is exactly 11.5 mc, the two difference frequencies will be identical (1.5 mc). The double-tuned circuit attenuates all mixer products except the difference frequencies. The output of the double-tuned filter is coupled through transformer T1 to the error detector/ amplifier.

4-192. MC ERROR MIXER, TEST DATA.

4-193. Pertinent references and applicable test data for the mc error mixer are as follows:

a. Radio Receiver R-1051/URR, Main Frame, Schematic Diagram, Figure 5-1.

b. 1 MC Synthesizer Electronic Subassembly, Servicing Block Diagram, Figure 4-61.

c. 1 MC Synthesizer Electronic Subassembly, Schematic Diagram, Figure 5-6.

d. Spectrum Generator/Mixer, Component and Test-Point Location, Figure 5-70.

e. Required Test Equipment:

(1) RF Signal Generator, CAQI-606A.

(2) Electronic Multimeter, CCVO-91CA.

(3) Oscilloscope, AN/USM-105A.

(4) Multimeter, AN/PSM-4.

(5) Heterodyne Voltmeter, Bruel and Kjaer, 2005.

(6) Translator/Synthesizer Test Set, TS-2133/WRC-1.

f. Refer to paragraph 3-34 in Technical Manual for Repair of AN/WRC-1 and R-1051/ URR 2N Modules, NAVSHIPS 95700, for mc error mixer adjustment procedures.

4-194. ERROR DETECTOR/AMPLIFIER, FUNCTIONAL CIRCUIT DESCRIPTION.

4-195. The error detector/amplifier (figure 4-25) consists of two if. amplifiers (Q1 and Q2)

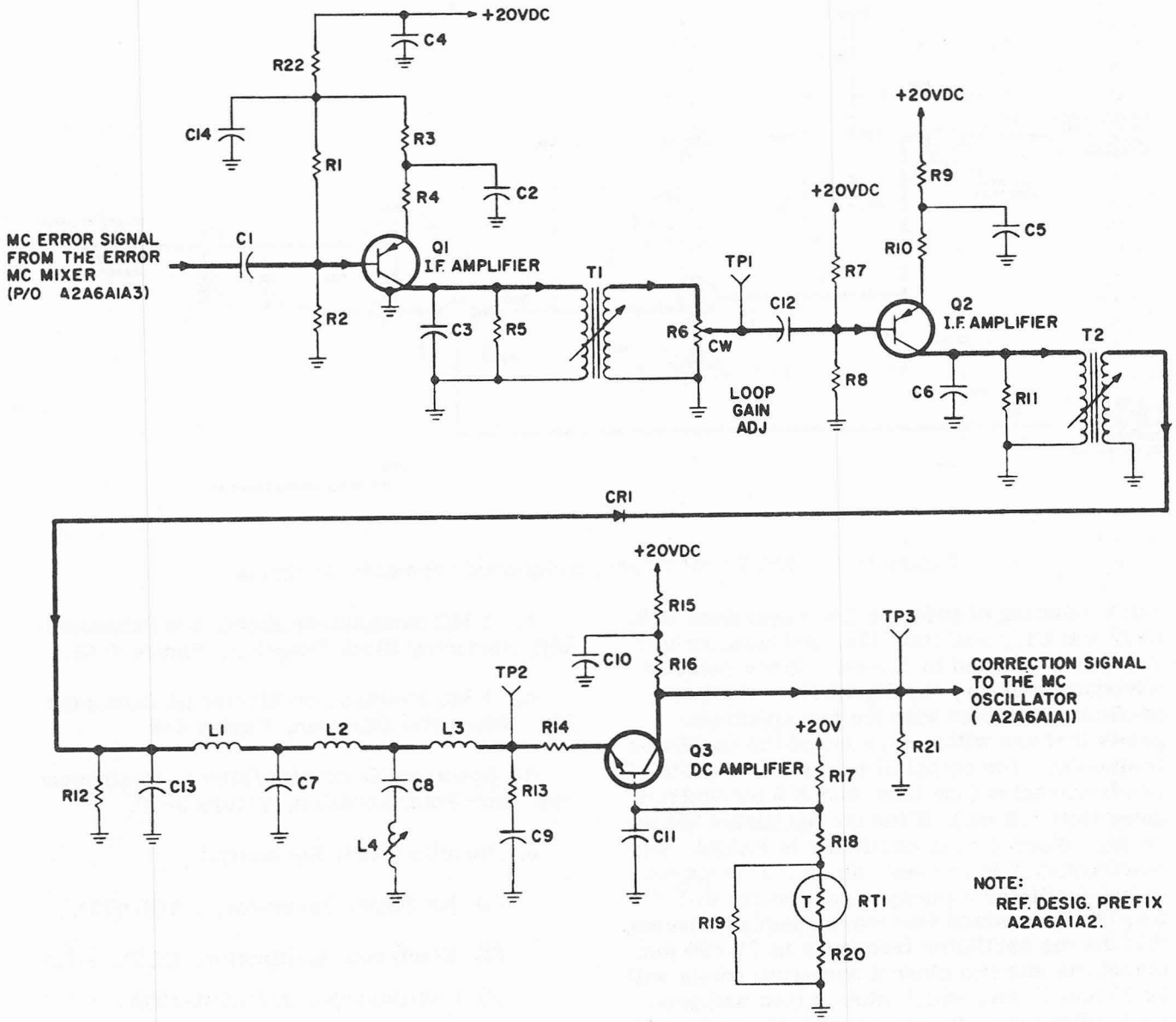

Figure 4-25. Error Detector/Amplifier, Simplified Schematic Diagram

and a dc amplifier (Q3). These circuits, which form a part of 1 MC Synthesizer Electronic Subassembly A2A6A1, amplify and detect the mc error signal, resulting in a correction signal for application to the mc oscillator. The following paragraphs describe the operation of the error detector/amplifier circuit in detail.

4-196. The signal from the error mixer is coupled through capacitor C1 to the base of if. amplifier Q1. The base bias for if. amplifier Q1 is provided by voltage divider R1, R2. Resistor R22 and capacitor C14 are used for decoupling. Resistor R4 provides a small amount of degeneration to add to the stability of if. amplifier Q1. The output circuit of if. amplifier Q1 is a tuned circuit consisting of capacitor C3 and transformer T1, which is tuned to 1.5 mc. Resistor R5 is used to load the tank circuit sufficiently to ensure uniformity. The output signal of if. amplifier Q1 is coupled through transformer T1 to potentiometer R6, which is used to adjust the gain of the phase lock loop. The output from the wiper of this potentiometer is coupled through capacitor C12 to the base of if. amplifier Q2. The base bias for if. amplifier Q2 is provided by voltage divider R7, R8. Resistor R10 provides a small amount of degeneration to add to the stability of if. amplifier Q2. The output circuit of if. am-

plifier Q2 is a tuned circuit consisting of capacitor C6 and transformer T2, which is tuned to 1.5 mc. Resistor R11 is used to load the tank circuit sufficiently to ensure uniformity. The output signal from error amplifier Q2 is coupled through transformer T2 and applied to a diode detector circuit. The diode detector circuit consists of diode CR1, resistor R12, and capacitor C13. The output of the diode detector is filtered by the network consisting of a composite of a constant-k section and an m-derived section. The constant-k section consists of capacitor C7, inductor L1, and a portion of inductor L2. The m-derived section consists of inductors L3 and L4, capacitor C8, and the remaining portion of inductor L2. Inductor L4 is made variable to compensate for the tolerance of the components used in the m-derived section. Resistor R13 and capacitor C9 form the termination of the filter. The output of this filter is applied to the emitter of dc amplifier Q3. Resistor R14 provides a small amount of degeneration to add to the stability of dc amplifier Q3. Base bias for dc amplifier Q3 is provided by voltage divider R17, R18, R19, R20, RT1. Thermistor RT1 varies the bias with temperature to compensate for changes in the base-emitter voltage of dc amplifier Q3 that result from temperature changes. Resistors R15 and R16, and capacitor C10 in the collector circuit of dc amplifier Q3 serve as the collector load and as a lag network for the phase-locked loop, which decreases the noise output and increases the loop stability. Resistor R21 prevents the collector voltage of dc amplifier Q3 from rising above 19 vdc and forward-biasing voltage variable capacitor A2A6A1A1CR3. The error voltage is taken from the collector of dc amplifier Q3 and applied to the mc oscillator.

4-197. ERROR DETECTOR/AMPLIFIER, TEST DATA.

4-198. Pertinent references and applicable test data for the error detector/amplifier are as follows:

a. Radio Receiver R-1051/URR, Main Frame, Schematic Diagram, Figure 5-1.

b. 1MC Synthesizer Electronic Subassembly, Schematic Diagram, Figure 5-6.

c. 1 MC Synthesizer Electronic Subassembly, Servicing Block Diagram, Figure 4-61.

d. Mc Oscillator AGC, Component and Test-Point Location, Figure 5-68.

e. Required Test Equipment:

(1) RF Signal Generator, CAQI-606A.

(2) Electronic Multimeter, CCVO-91CA.

(3) Oscilloscope, AN/USM-105A.

(4) Multimeter, AN/PSM-4.

(5) Heterodyne Voltmeter, Bruel and Kjaer, 2005.

(6) Translator/Synthesizer Test Set, TS-2133/WRC-1.

f. Refer to paragraph 3-34 for Repair of AN/WRC-1 and R-1051/URR 2N Modules, NAVSHIPS 95700, for error detector/amplifier adjustment procedures.

4-199. 5 MC FREQUENCY STANDARD, FUNCTIONAL CIRCUIT DESCRIPTION.

4-200. The 5 mc frequency standard (figure 4-26) consists of an oscillator (Q5) and a buffer amplifier (Q6). These circuits, which form a part of Frequency Standard Electronic Assembly A2A5, provide an accurate 5.000000-mc signal to be used as a standard throughout the R-1051/URR. The 5 mc frequency standard circuit is used during all modes of operation. Assembly A2A5A2 is housed in an oven, the temperature of which is maintained at a constant 85°C by the oven control circuit. The following paragraphs describe the operation of the circuits in detail.

4-201. The frequency of oscillator Q5 is 5.000000 mc as determined by the parallel resonant tuned circuit consisting of capacitor C7 and the primary of transformer T2 and controlled by the series resonant circuit consisting of parallel capacitors A2A5C1 and C10 and crystal Y1. To sustain oscillations, feedback for oscillator Q5 is obtained from a tap on the primary of transformer T2 and passed through trimmer capacitor A2A5C1, capacitors C9 and C10, and crystal Y1 to the emitter of oscillator Q5. The amplitude of the output from oscillator Q5 is limited by diodes CR5 and CR6. Crystal Y1 allows only a 5.000000-mc signal to

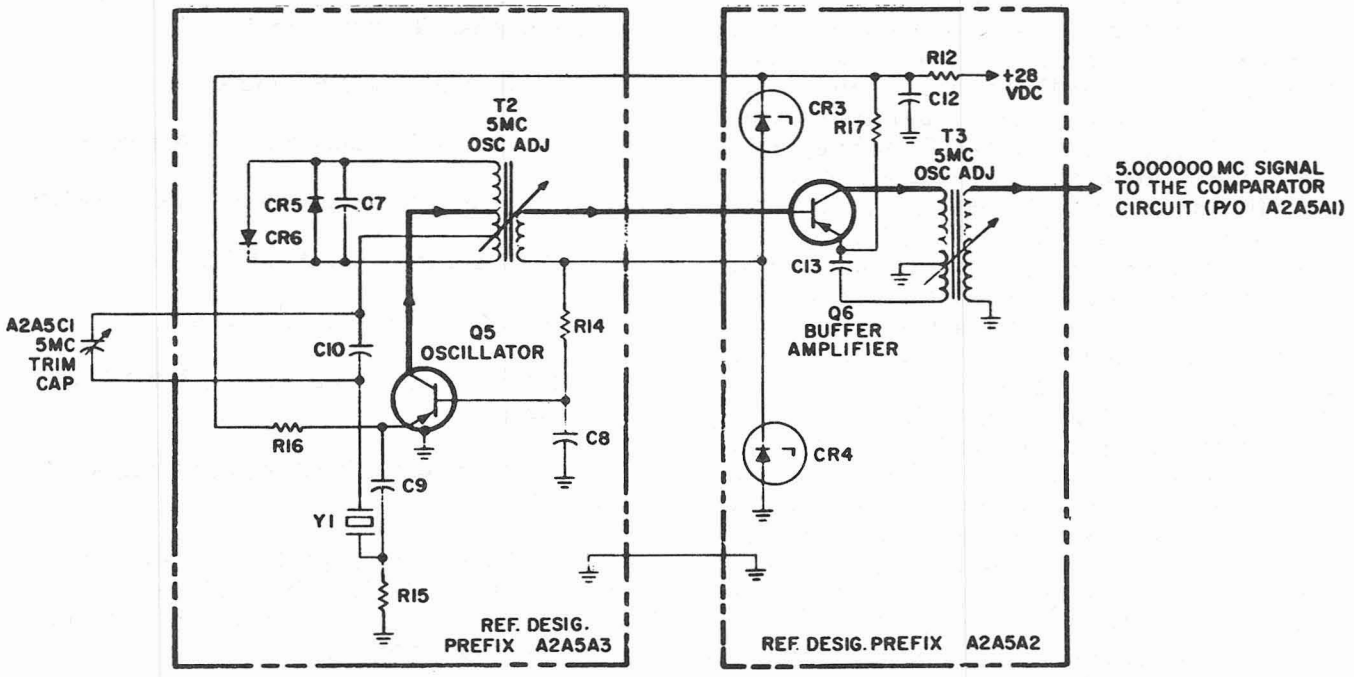

Figure 4-26. 5 MC Frequency Standard, Simplified Schematic Diagram

pass, which holds oscillator Q5 to oscillations at only 5 mc. Stable operating voltages of 15 vdc and 7.5 vdc are assured by resistor R12 and two 7.5-volt Zener diodes CR3 and CR4 in series across 28 vdc supply. Base bias for oscillator Q5 is taken from the junction of Zener diodes CR3 and CR4 and is applied through resistor R14 to the base of oscillator Q5. Capacitor C8 is a bypass capacitor. Resistor R16 is an emitter load resistor.

4-202. The output of oscillator Q5 is coupled by transformer T2 to the base of buffer amplifier Q6, where it is amplified. The output load of buffer amplifier Q6 is tuned transformer T3. A tap on the primary of transformer T3 supplies negative feedback to the emitter circuit of buffer amplifier Q6, assuring the stability of amplifier Q6.

4-203. 5 MC OSCILLATOR, TEST DATA.

4-204. Pertinent references and applicable test data for the 5 mc frequency standard circuit are as follows:

a. Radio Receiver R-1051/URR, Main Frame, Schematic Diagram, Figure 5-1.

b. Frequency Standard Electronic Assembly, Servicing Block Diagram, Figure 4-56.

c. Frequency Standard Electronic Assembly, Schematic Diagram, Figure 5-5.

d. Refer to paragraph 2-29 in Technical Manual for Repair of AN/WRC-1 and R-1051/URR 2N Modules, NAVSHIPS 95700, for 5 mc oscillator adjustment procedures.

e. Required Test Equipment:

(1) Frequency Standard, AN/URQ-9.

(2) Electronic Multimeter, CCVO-91CA.

(3) Frequency Meter, CAQI-524D.

(4) Multimeter, AN/PSM-4.

(5) Frequency Standard Test Set, TS-2134/WRC-1.

f. 5 MC Frequency Standard, Component Location, Figure 5-64.

g. Oven Control and Buffer Amplifier, Component Location, Figure 5-63.

4-205. OVEN CONTROL, FUNCTIONAL CIRCUIT DESCRIPTION.

4-206. The oven control (figure 4-27) consists of an oscillator (Q1, Q2), an emitter follower

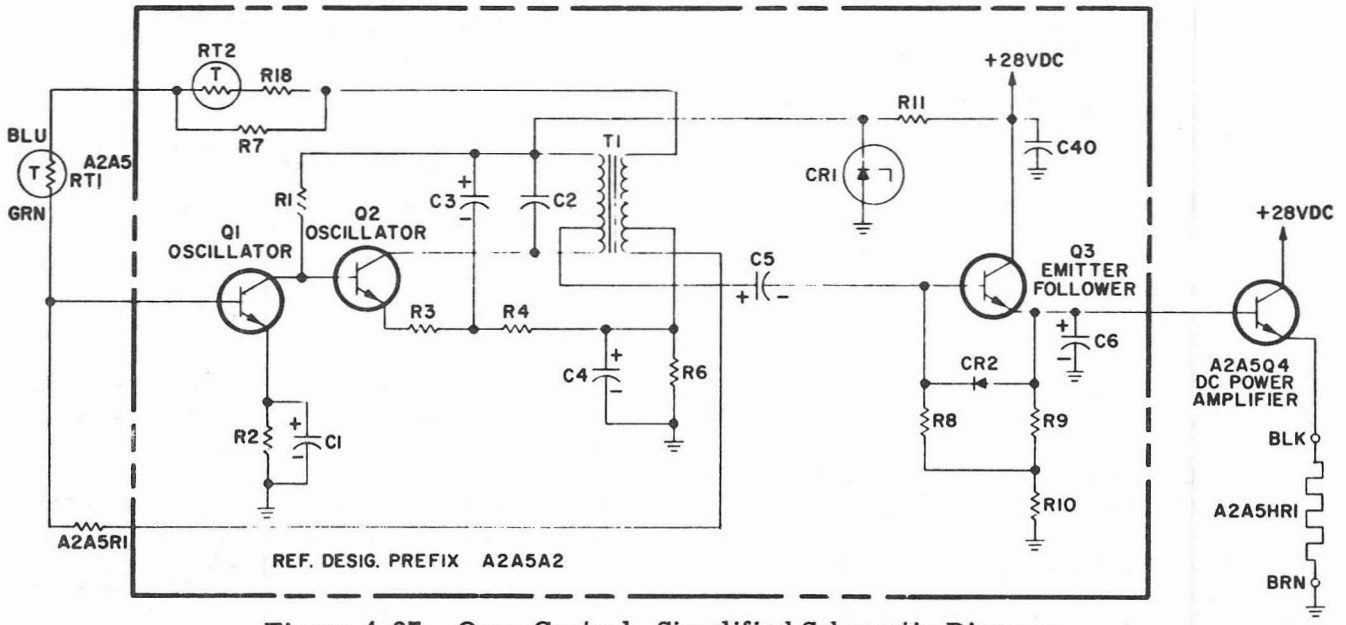

Figure 4-27. Oven Control, Simplified Schematic Diagram

(Q3), a dc power amplifier (A2A5Q4), and an oven heater (A2A5HR1). These circuits, which form a part of Frequency Standard Electronic Assembly A2A5, maintain the 5-mc crystal oven at a constant temperature of 85°C (185°F). The oven control circuit is used during all modes of operation. The following paragraphs describe the operation of the circuits in detail.

4-207. The frequency of oscillator Q1, Q2 is approximately 18 kc, as determined by the tuned circuit consisting of capacitor C2 and the primary of transformer T1. The feedback for oscillator Q1, Q2 is produced by a bridge circuit. The center-tapped secondary of transformer T1 acts as two of the legs of the bridge and resistor A2A5R1 and thermistor A2A5RT1, thermistor RT2, resistor R18, resistor R7 act as the other two legs. This bridge is designed to balance when thermistor A2A5RT1 is at a temperature of 85°C. Thermistor A2A5RT1 is physically mounted underneath heater A2A5HR1. Due to heat loss to its surroundings, the bridge will never become balanced; therefore, the oscillator will never stop oscillating. Emitter resistor R2 provides self-bias for oscillator Q1. Capacitor C1 functions as an emitter bypass capacitor. Emitter resistors R3, R4, and R6 provide self-bias for oscillator Q2. DC bias is also taken from the junction of resistors R4 and R6 and applied through the secondary of transformer T1 and resistor A2A5R1 to the base of oscillator Q1. Capacitors C3 and C4 function as emitter bypass capacitors.

4-208. The 18-kc signal is taken from a tap on the primary of transformer T1, and is coupled through capacitor C5 to the base of emitter follower Q3, where it is rectified. Capacitor C6 smoothes the rectified signal. The rectified signal is applied to the base of power amplifier A2A5Q4. This controls the amount of current through heater A2A5HR1 in the emitter circuit of power amplifier A2A5Q4 and consequently the temperature of the oven. The amount of current flow is directly proportional to the amount of unbalance caused in the bridge circuit, which determines the amplitude of the output signal from oscillator Q1, Q2. Diode CR2 protects emitter follower Q3 against excessive reverse-bias on the emitter-base junction. When the base voltage attempts to go more negative than the emitter voltage, diode CR2 will be forward-biased, thereby keeping the base voltage at the same level as the emitter voltage.

4-209. Stable operating voltages for oscillator Q1, Q2 are provided by resistor R11 and zener diode CR1.

4-210. OVEN CONTROL, TEST DATA.

4-211. Pertinent references and applicable test data for the oven control circuit are as follows:

a. Radio Receiver R-1051/URR, Main Frame, Schematic Diagram, Figure 5-1.

b. Frequency Standard Electronic Assembly, Servicing Block Diagram, Figure 4-56.

c. Frequency Standard Electronic Assembly, Schematic Diagram, Figure 5-5.

d. Required Test Equipment:

(1) Electronic Multimeter, CCVO-91CA.

(2) Multimeter AN/PSM-4.

(3) Frequency Standard Test Set, TS-2134/WRC-1.

e. Oven Control and Buffer Amplifier, Component Location, Figure 5-63.

f. Refer to paragraph 2-27 in Technical Manual for Repair of AN/WRC-1 and R-1051/URR 2N Modules, NAVSHIPS 95700, for oven control adjustment procedures.

4-212. COMPARATOR, FUNCTIONAL CIRCUIT DESCRIPTION.

4-213. The comparator (figure 4-28) consists of a buffer amplifier (Q5), a comparator stage (Q7), and an amplifier (Q6). These circuits, which form a part of Frequency Standard Electronic Assembly A2A5, compare the 5.000000-mc signal received from the 5 mc frequency standard circuit with an accurate external 5-mc signal. This function is required to determine and maintain the accuracy of the applied internal 5-mc frequency standard signal. The following paragraphs describe the operation of this circuit in detail.

4-214. In the INT position of switch A2A5S1, the 5-mc signal from the 5 mc frequency standard is applied to buffer amplifier Q5 through 5 MC LEVEL ADJ potentiometer R22, contacts 2 and 4 of switch A2A5S1, and coupling capacitor C19. The amplified 5-mc signal output of

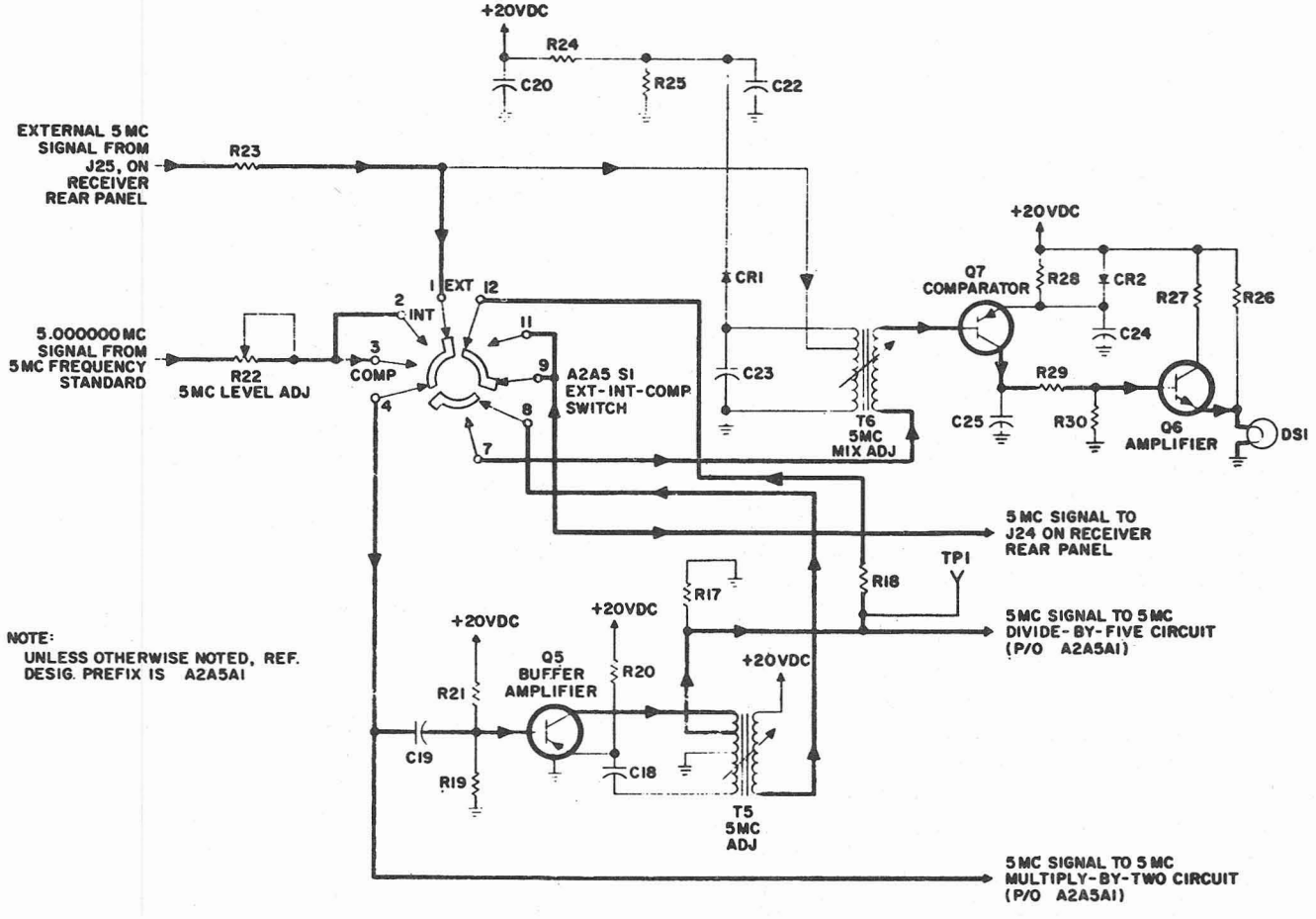

Figure 4-28. Comparator, Simplified Schematic Diagram

this stage is applied to the 5 mc divide-by-five circuit through a portion of the primary winding of 5 MC ADJ transformer T5. When switch A2A5S1 is in the INT position, the input 5-mc frequency standard signal is also applied to the 5 mc multiply-by-two circuit through 5 MC ADJ potentiometer R22 and switch A2A5S1. Base bias for buffer amplifier Q5 is provided by voltage divider R19 and R21. Negative-feedback to the emitter of buffer amplifier Q5 is provided by transformer coupling of the amplifier's 5-mc output through the center-tapped primary winding of 5 MC ADJ transformer T5 and capacitor C18. This feedback provides frequency stability to this amplification stage. Comparator Q7 is cut off at this time by the positive voltage applied through resistor R31 and transformer T6 to the base. Resistor R17 is the output load resistor for buffer amplifier Q5. Resistor R20 is the emitter resistor.

4-215. When switch A2A5S1 is in the EXT position, the externally-supplied 5-mc signal is amplified by buffer amplifier Q5 and applied to the 5 mc divide-by-five circuit in the same manner as described above for INT operation. Similarly, the signal is coupled directly to the 5 mc multiply-by-two circuit through contacts 1 and 4 of switch A2A5S1. Since contacts 7-8 are not closed, no internal 5 mc signal is applied to comparator Q7, which is held at cutoff (para 4-214). Comparison of the internally-generated 5-mc signal with an externally-applied 5-mc standard is possible by placing switch A2A5S1 in the COMP position. In this condition, the 5-mc internal signal is applied to the secondary winding of transformer T6 through contacts 3 and 4 of switch A2A5S1, buffer amplifier Q5, transformer T5 and contacts 7-8 of switch A2A5S1. The 5-mc external signal is also applied to transformer T6 from connector J25, on the rear panel of the R-1051/URR, through isolating resistor R23. Comparator Q7 and associated amplifier Q6 operate since both the external and internal 5 mc signals are available to the circuit. The amplitude of externally-applied signals is limited to approximately 300 millivolts peak by means of the voltage divider network consisting of resistors R24 and R25 and diode CR1. In the event that the frequencies of the two signals are different, the resulting difference frequency is coupled to the base of comparator Q7. A portion of the output from comparator Q7 is dc coupled to the base of amplifier Q6 by voltage divider-collector load resistors R29 and R30. The output of amplifier Q6 is developed across lamp DS1 in its emitter circuit, causing the lamp to flash at the difference frequency. Resistor R28 is the emitter bias resistor, which is rf bypassed by capacitor C24. Capacitor C25 is an rf bypass capacitor. Diode CR2 in the emitter circuit of comparator Q7 keeps the gain of the stage constant in spite of temperature variations. This control is effected since the resistance of diode CR2 varies with temperature change. Resistor R27 is the collector dropping resistor for amplifier Q6. Resistor R26 is a bleeder resistor for stabilizing the quiescent emitter bias for dc amplifier Q6.

4-216. COMPARATOR, TEST DATA.

4-217. Pertinent references and applicable test data for the comparator circuit are as follows:

a. Radio Receiver R-1051/URR, Main Frame, Schematic Diagram, Figure 5-1.

b. Frequency Standard Electronic Assembly, Servicing Block Diagram, Figure 4-56.

c. Frequency Standard Electronic Assembly, Schematic Diagram, Figure 5-5.

d. Refer to paragraph 2-25 and 2-29 in Technical Manual for Repair of AN/WRC-1 and R-1051/URR 2N Modules, NAVSHIPS 95700, for comparator adjustment procedures.

e. Required Test Equipment:

(1) Electronic Multimeter, CCVO-91CA.

(2) Multimeter, AN/PSM-4.

(3) RF Signal Generator, CAQI-606A.

(4) Frequency Standard Test Set, TS-2134/WRC-1.

f. 5 MC Multiplier, Dividers and Comparator, Component and Test-Point Location, Figure 5-62.

4-218. 5 MC DIVIDE-BY-FIVE, FUNCTIONAL CIRCUIT DESCRIPTION.

4-219. The 5 mc divide-by-five circuit (see figure 4-29) consists of a 4 mc amplifier (Q2) and a 1 mc amplifier (Q3). These circuits, which form a part of Frequency Standard Electronic Assembly A2A5, derive a 1 mc signal

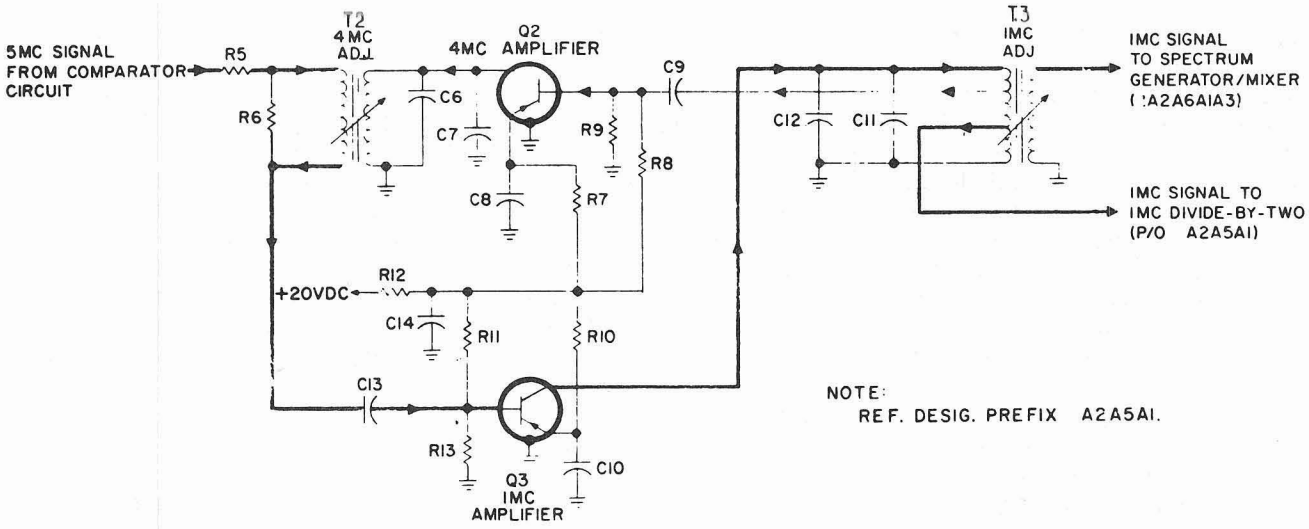

Figure 4-29. 5 MC Divide-By-Five, Simplified Schematic Diagram

for use in the 1 MC Synthesizer Electronic Subassembly A2A6A1 from the 5 mc signal from the comparator circuit (see paragraph 4-212). The following paragraphs describe the operation of the circuits in detail.

4-220. Amplifiers Q2 and Q3 form a regenerative closed loop to provide a 1 mc output. At the instant that power is applied, circuit disturbance causes noise to be produced in the tuned outputs of amplifiers Q2 and Q3. The tuned output of amplifier Q3 allows only the 1 mc portion of the noise to pass. This low level 1-mc signal is applied to 4 mc amplifier Q2. Amplifier Q2 is biased in a non-linear condition so that the fourth harmonic of the 1 mc is amplified. The 4 mc is mixed with the 5 mc input, providing a 1 mc input to amplifier Q3. The 1 mc is amplified and applied to amplifier Q2. This resultant flywheel effect is repeated until a stable 1 mc output is produced, which is locked to the 5 mc frequency standard.

4-221. The 5 mc signal, applied to the primary of transformer T2, is mixed with the 4 mc signal from the secondary, producing a 1 mc difference frequency. The 1 mc signal is coupled by capacitor C13 to the base of 1 mc amplifier Q3. The base-bias for amplifier Q3 is provided by voltage divider R12, R11, R13. The output load for 1 mc amplifier Q3 consists of the primary of transformer T3 and capacitors C11 and C12. This output circuit is tuned to 1 mc. Capacitor C12 has a negative temperature coefficient and compensates for changes in the 1 mc amplifier caused by temperature changes. The 1 mc signal is taken from a tap on the primary of transformer T3 and coupled to the base of 4 mc amplifier Q2 by capacitor C9. Base bias for amplifier Q2 is provided by voltage divider R8, R9, R12. The output load for 4 mc amplifier Q2 consists of the primary of transformer T2 and capacitors C6 and C7. This output circuit is tuned to 4 mc. Capacitor C7 has a negative temperature coefficient and compensates for changes in the 4 mc amplifier output caused by temperature changes. Resistors R7 and R10 are emitter bias resistors, which are rf bypassed by capacitors C8 and C10, respectively. Resistor R12 and capacitor C14 provide decoupling for amplifiers Q2 and Q3. The two 1 mc outputs from the 5 mc divide-by-five circuits are taken from the primary and secondary of transformer T3 and applied to the 1 mc divide-by-two circuit and to the spectrum generator/mixer circuit in 1 MC Synthesizer Electronic Subassembly A2A6A1.

4-222. 5 MC DIVIDE-BY-FIVE, TEST DATA.

4-223. Pertinent references and applicable test data for the 5 mc divide-by-five circuit are as follows:

a. Radio Receiver R-1051/URR, Main Frame, Schematic Diagram, Figure 5-1.

b. Frequency Standard Electronic Assembly, Servicing Block Diagram, Figure 4-56.

c. Frequency Standard Electronic Assembly, Schematic Diagram, Figure 5-5.

d. Refer to paragraph 2-25 in Technical Manual for Repair of AN/WRC-1 and R-1051/URR 2N Modules, NAVSHIPS 95700, for 5 mc divide-by-five adjustment procedures.

e. Required Test Equipment:

(1) Electronic Multimeter, CCVO-91CA.

(2) Multimeter, AN/PSM-4.

(3) RF Signal Generator, CAQI-606A.

(4) Frequency Standard Test Set, TS-2134/WRC-1.

f. 5 MC Multiplier, Divider and Comparator, Component and Test-Point Location, Figure 5-62.

4-224. 1 MC DIVIDE-BY-TWO, FUNCTIONAL CIRCUIT DESCRIPTION.

4-225. The 1 mc divide-by-two circuit, which consists of the 500 kc amplifier (Q1) in a regenerative oscillator configuration (figure 4-30) forms a part of Frequency Standard Electronic Assembly A2A5. This circuit derives a 500 kc signal from the 1 mc signal obtained from the 5 mc divide-by-five circuit. The 500 kc signal is used as the local carrier for reinsertion into the signal in the product detector and serves as the trigger for 100 KC spectrum generator A2A6A5A1. The following paragraph describes the operation of the circuit in detail.

4-226. With no 1 mc signal input, the 1 mc divide-by-two circuit will not oscillate. When the 1 mc signal is applied through isolating resistor R4, the feedback winding of transformer T1, and coupling capacitor C4 to the base of 500 kc oscillator Q1, the transistor will be biased on. At this time, turning on transistor causes noise to be produced. Since transformer T1 is tuned to 500 kc, the 500 kc portion of this noise will pass through transformer T1 and mix with the 1 mc signal, producing a 500 kc difference frequency. This difference will be amplified by 500 kc amplifier Q1 and again applied to transformer T1, thereby sustaining oscillations. Resistor R2 is the base bias resistor. Resistor R1 is the emitter resistor, which is rf bypassed by capacitor C1. Resistor R3 and capacitors C2 and C3 provide decoupling for 500 kc amplifier Q1. The 500 kc output is taken from the secondary of transformer T1 and applied to the 500 kc gates in Receiver Mode Selector Electronic Assembly A2A1 and, 100 kc spectrum generator circuit A2A6A5A1.

4-227. 1 MC DIVIDE-BY-TWO, TEST DATA.

4-228. Pertinent references and applicable test data for the 1 mc divide-by-two circuit are as follows:

a. Radio Receiver R-1051/URR, Main Frame Schematic Diagram, Figure 5-1.

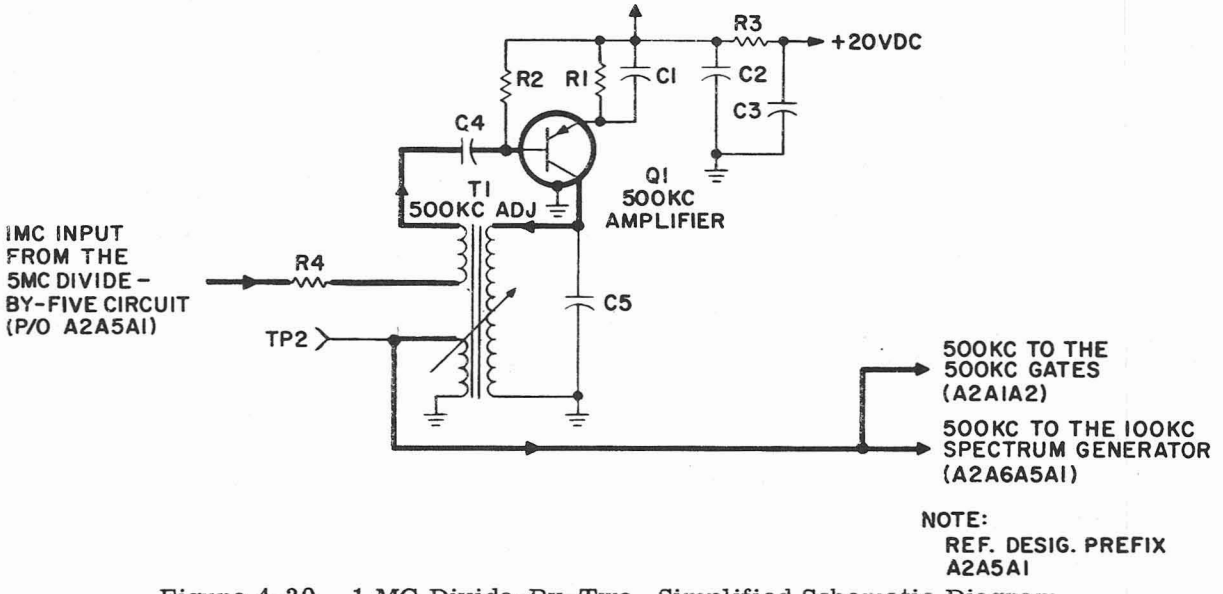

Figure 4-30. 1 MC Divide-By-Two, Simplified Schematic Diagram

b. Frequency Standard Electronic Assembly, Servicing Block Diagram, Figure 4-56.

c. Frequency Standard Electronic Assembly, Schematic Diagram, Figure 5-5.

d. Refer to paragraph 2-25 in Technical Manual for Repair of AN/WRC-1 and R-1051/URR 2N Modules, NAVSHIPS 95700, for 1 mc divide-by-two adjustment procedures.

e. Required Test Equipment:

(1) Electronic Multimeter, CCVO-91CA.

(2) Multimeter, AN/PSM-4.

(3) RF Signal Generator, CAQI-606A.

(4) Frequency Standard Test Set, TS-2134/WRC-1.

f. 5 MC Multiplier, Dividers and Comparator, Component and Test-Point Location, Figure 5-62.

4-228A. 5 MC FREQUENCY STANDARD USED IN RECEIVER R-1051B/URR, FUNCTIONAL CIRCUIT DESCRIPTION.

4-228B. The 5-mc frequency standard (figure 4-30A) consists of a Pierce oscillator (Q1) and buffer amplifier (Q2 and Q3). These circuits, which form a part of Frequency Standard Electronic Assembly A2A5, provide an accurate 5.000,000-mc signal used as a standard throughout the T-827B/URT. The crystal oscillator assembly is housed in an oven maintained at a temperature selected in the range 70° ±4°C (158.0°F to 172.4°F) for optimum operation of the crystal. The 5-mc frequency standard circuit is used during all modes of operation. The following paragraphs describe the operation of this circuit.

4-228C. The frequency of oscillator Q1 is 5 mc obtained from a Pierce configuration. Capacitor C3 is for coarse adjustment and capacitor C4 is for fine adjustment of the oscillator frequency. The signal from oscillator Q1 is amplified by amplifier stages Q2 and Q3. These amplifiers not only increase the signal level of oscillator Q1 but isolate it from the useful load to increase stability. Conventional bias circuits are used for oscillator Q1 and isolation amplifier Q2. Base bias, for amplifier Q3 is developed across resistor R111 in series with diode CR2 as a result of

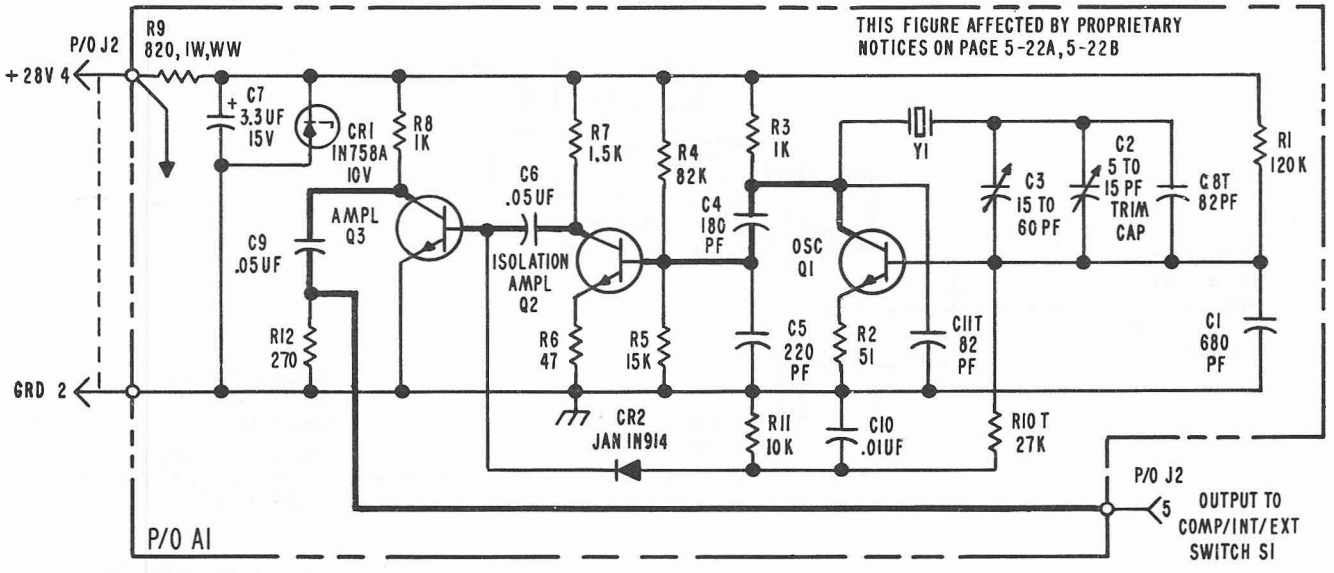

Figure 4-30A. 5 MC Frequency Standard, Simplified Schematic Diagram (Used on R-1051B/URR)

the r-f excitation from the collector of isolation amplifier Q2.

4-228D. Operating voltage for the oscillator and amplifiers is obtained by dropping the 20-vdc supply to 10 vdc by Zener diode CR1 and resistor R9. Filtering is provided by capacitor C7. The oscillator-amplifier circuits are resistance-capacitive coupled throughout, to avoid frequency drifts generally produced by transformer coupling.

4-228E. 5 MC FREQUENCY STANDARD, TEST DATA.

4-228F. Pertinent references and applicable test data for the 5-mc frequency standard are as follows:

a. Radio Receiver R-1051B/URR, Main Frame, Schematic Diagram, Figure 5-1A.

b. Frequency Standard Electronic Assembly, Servicing Block Diagram, Figure 4-56A.

c. Frequency Standard Electronic Assembly, Schematic Diagram, Figure 5-5A.

d. Refer to paragraph 2A-19 in Technical Manual for Repair of AN/WRC-1 and R-1051/URR 2N Modules, NAVSHIPS 0967-034-2000 for 5-mc oscillator circuit alignment.

e. Required test equipment:

(1) Frequency Standard AN/URQ-9.

(2) RF Voltmeter CCVO-91CA.

(3) Frequency Meter CAQI-524D.

(4) Multimeter AN/PSM-4.

(5) Frequency Standard Test Set, TS-2134/WRC-1.

f. Output frequency: 5,000,000.1 to 4,999,999.1 cps.

g. 5 MC Frequency Standard, Component Location, Figure 5-62A and 5-64A.

h. Oven Component Location, Figure 5-62B.

4-228G. OVEN CONTROL, FUNCTIONAL CIRCUIT DESCRIPTION.

4-228H. The oven control (figure 4-30B) consists of a bridge circuit, a differential

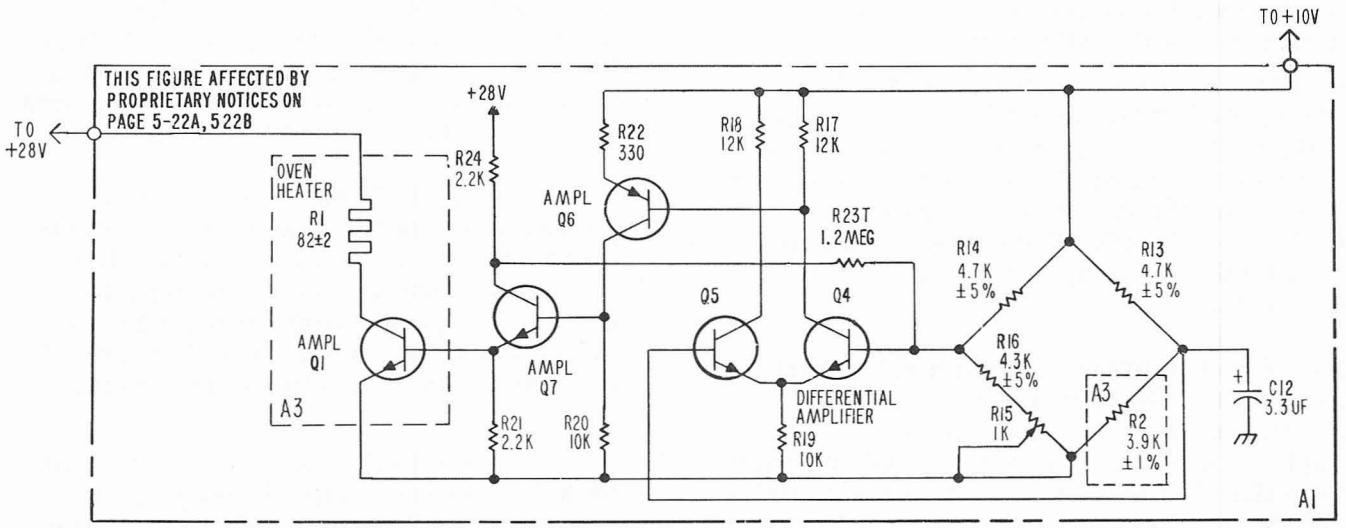

Figure 4-30B. Oven Control, Simplified Schematic Diagram (Used on R-1051B/URR)

amplifier (Q4, Q5), a Darlington amplifier (Q6 and Q7), and a d-c power amplifier A3Q1. These circuits, which form a part of Frequency Standard Electronic Assembly A2A5, maintain the 5-mc crystal oven at a constant temperature in the range of 74° ±4°C (158.0°F to 172.4°F) for optimum frequency stability of the crystal. The oven control circuit is used during all modes of operation. The following paragraphs describe the operation of the oven control circuits.

4-228I. Resistors R13, R14, A3R2, R15, and R16 form a bridge circuit, with temperature sensitive resistor A3R2 in one of the arms. This resistor, with a well-defined temperature characteristic, is attached to the oven wall, sensing its temperature. Any variation in temperature will unbalance the bridge giving a d-c voltage differential between the bases of transistors Q4 and Q5. This voltage differential is sensed and amplified by differential amplifier (Q4, Q5) and further amplified by transistors Q6 and Q7 connected in cascade (Darlington configuration) to increase stability, gain, and input impedance. This amplified dc voltage controls the oven amplifier transistor A3Q1, increasing or decreasing the current flow (and thus the power dissipation in oven heater resistor A3R1. The increase or decrease in temperature thus obtained will be sensed by temperature sensitive resistor A3R2 driving the input bridge toward balance and maintaining the required temperature for proper oscillator operation.

4-228J. Potentiometer R15 (part of one arm of the bridge) is set by trial and error to the optimum temperature of the oven (74° ±4°C) to take care of the differences obtained during manufacturing of the crystal. Resistor R23T is in a feedback loop. This increases the stability of the differential amplifier.

4-228K. The bridge circuit and transistors Q4, Q5, and Q6 operate from the same 10-vdc supply used for the oscillator and amplifier circuits. Transistor Q7 operates from the 20-vdc supply, and power transistor A3Q1 and oven heater resistor A3R1 operate from a 28-vdc supply.

4-228L. OVEN CONTROL, TEST DATA.

4-228M. Pertinent references and applicable test data for the oven control circuit are as follows:

a. Radio Receiver R-1051B/URR Main Frame, Schematic Diagram, Figure 5-1A.

b. Frequency Standard Electronic Assembly, Servicing Block Diagram, Figure 4-56A.

c. Frequency Standard Electronic Assembly, Schematic Diagram, Figure 5-5A.

d. Required test equipment:

(1) RF Voltmeter CCVO-91CA.

(2) Multimeter AN/PSM-4.

(3) Frequency Standard Test Set TS-2134/WRC-1.

e. Oven Component Location, Figure 5-62B.

4-228N. COMPARATOR, FUNCTIONAL CIRCUIT DESCRIPTION.

4-228O. The comparator (figure 4-30C) consists of mixer Q10 and amplifier Q11. These circuits, which form a part of Frequency Standard Electronic Assembly A2A5, compare the 5:000,000-mc signal received from the 5-mc frequency standard circuit with an accurate external 5-mc signal. This function is required to determine and maintain the accuracy of the internal 5-mc frequency standard signal. The following paragraphs describe the operation of the circuit.

4-228P. In the INT position of switch S1, any externally applied signal is completely disconnected from the system and only the 5-mc signal from the oscillator (Q1) is used. This signal is applied through contacts 10 and 12 on switch S1 and directed to the regenerative multipliers and dividers.

4-228Q. In the COMP position of selector switch S1, the 5-mc signal generated by the oscillator (Q1) is applied to the mixer Q10 through contacts 9 and 10 of switch

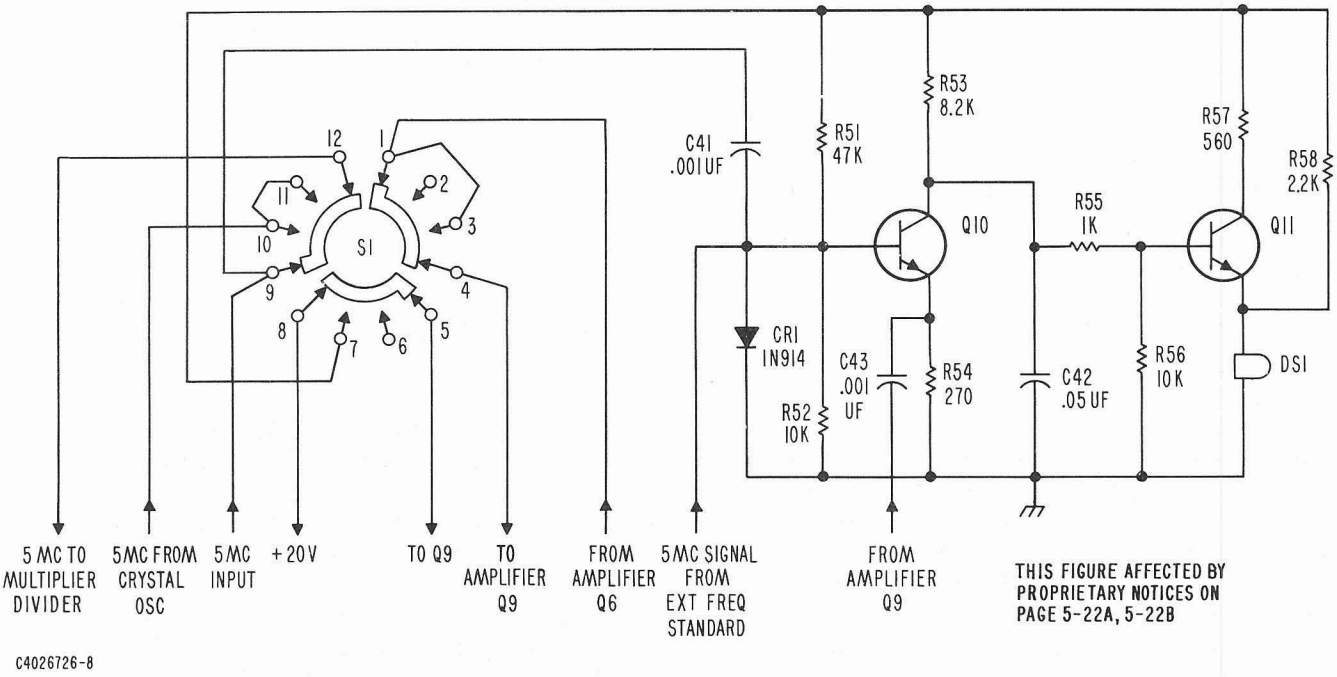

Figure 4-30C. Comparator, Simplified Schematic Diagram (Used on R-1051B/URR)

S1, then through transistor amplifier Q6, through switch contacts 3 and 4 to amplifier Q9 and then to the emitter of mixer Q10. A 5-mc signal (from a highly stable source) is injected through J1-A4 into the base of Q10. Diode CR1 acts as a limiter and temperature compensation element. The difference frequency between the internally generated 5-mc ± error signal and the highly stable external 5-mc signal is filtered by resistor R53 and capacitor C42 combination and applied to the base of amplifier Q11 through resistor R55. The emitter load of amplifier (lamp driver) Q11 is a lamp (DS1) which will light on-and-off at a rate determined by the previously mentioned frequency error difference. When both signals are at the same frequency, lamp DS1 will not light. This comparator circuit allows an operator in the field to roughly adjust the frequency to 5-mc by adjusting capacitor C2 (on the oscillator board assembly) whose shaft protrudes through the top cover. Power for operation of the comparator circuit is obtained through contacts 7 and 8 of switch S1. In any other position of the switch (INT or EXT) no power is available for the comparator operation. In the EXT position of the switch, the internally generated 5-mc signal is completely disconnected from the system and is not used. The external 5-mc signal from J1-A4 is used instead via contacts 9 and 12 of S1. From here it is directed to the locked oscillators and doubler.

4-228R. COMPARATOR, TEST DATA.

4-228S. Pertinent references and applicable test data for the comparator circuit are as follows:

a. Radio Receiver R-1051B/URR Main Frame, Schematic Diagram, Figure 5-1A.

b. Frequency Standard Electronic Assembly, Servicing Block Diagram, Figure 4-56A.

c. Frequency Standard Electronic Assembly, Schematic Diagram, Figure 5-5A.

d. Refer to paragraph 2A-21 in Technical Manual for Repair of AN/WRC-1 and R-1051/URR2N Modules, NAVSHIPS 0967-034-2000 for comparator adjustment procedures.

e. Required test equipment:

(1) RF Voltmeter CCVO-91CA.

(2) Multimeter AN/PSM-4.

(3) RF Signal Generator CAQI-606A.

(4) Frequency Standard Test Set TS-2134/WRC-1. (See note in table 1-4.)

f. 5 MC Multiplier, Dividers and Comparator, Component Location, Figure 5-62A.

4-228T. 5 MC MULTIPLY-BY-TWO, FUNCTIONAL CIRCUIT DESCRIPTION.

4-228U. The 5-mc multiply-by-two circuit consists of two amplifier stages and a doubler stage, which form part of the circuit group of Frequency Standard Electronic Assembly A2A5. This circuit derives a 10-mc signal for use in the 100-kc Synthesizer Electronic Assembly A2A6A2. The following paragraph describes the operation of this circuit.

4-228V. The 5-mc signal from the internal oscillator or the external source (depending on the setting of the selector switch) is fed via capacitor C25 to the base of amplifier Q6. It is then fed from the collector of this amplifier to amplifier Q7 and then to doubler stage Q8. The collector load of the transistor is a tank circuit tuned to 10-mc and consisting of capacitor C33 and transformer T3. From the secondary of the transformer the 10-mc signal is fed to J1-A5.

4-228W. 5 MC MULTIPLY-BY-TWO, TEST DATA.

4-228X. Pertinent references and applicable test data for the 5-mc multiply-by-two circuit are as follows:

a. Radio Receiver R-1051B/URR, Main Frame, Schematic Diagram, Figure 5-1A.

b. Frequency Standard Electronic Assembly, Servicing Block Diagram, Figure 4-56A.

c. Frequency Standard Electronic Assembly, Schematic Diagram, Figure 5-5A.

d. Refer to paragraph 2A-19 in Technical Manual for Repair of AN/WRC-1 and R-1051/URR 2N Modules, NAVSHIPS 0967-034-2000 for 5-mc multiply-by-two procedures.

e. Required test equipment:

(1) RF Voltmeter CCVO-91CA.

(2) Multimeter AN/PSM-4.

(3) RF Signal Generator CAQI-606A.

(4) Frequency Standard Test Set TS-2134/WRC-1.

f. Output level.

g. 5 MC Doubler, Divider and Comparator, Component Location, Figure 5-62A.

4-228Y. 1 MC LOCKED OSCILLATOR, FUNCTIONAL DESCRIPTION.

4-228Z. The 1-mc locked oscillator circuit, which forms part of Frequency Standard Electronic Assembly A2A5, derives a 1-mc signal for use in the spectrum generator mixer circuit of the 1MC Synthesizer Electronic Subassembly A2A6A3 from the 5-mc signal (internal or external) selected by the selector switch. The following paragraphs describe the operation of this circuit.

4-228AA. The 5-mc signal from the selector switch is amplified by amplifier Q1, and applied to the base of locked oscillator Q2 whose collector circuit is tuned to 1-mc. The 5-mc signal serves to lock the Q2 oscillator circuit output to 1-mc. This 1-mc signal level is divided down in the emitter circuit of locked oscillator Q2 and applied to the base of amplifier Q3.

4-228AB. The collector circuit of this stage consists of a tuned circuit, C13 and T1, resonated at 1-mc. The 1-mc signal is available at the secondary of T1 and is then fed to J1-A3.

4-228AC. 1 MC LOCKED OSCILLATOR.

4-228AD. Pertinent references and applicable test data for the 1-mc locked oscillator circuit are as follows:

a. Radio Receiver R-1051B/URR, Main Frame, Schematic Diagram, Figure 5-1A.

b. Frequency Standard Electronic Assembly, Servicing Block Diagram, Figure 4-56A.

c. Frequency Standard Electronic Assembly, Schematic Diagram, Figure 5-5A.

d. Refer to paragraph 2A-17 in Technical Manual for Repair of AN/WRC-1 and R-1051/URR 2N Modules, NAVSHIPS 0968-034-2000 for 1-mc locked oscillator alignment procedures.

e. Required test equipment:

(1) RF Voltmeter, CCVO-91CA.

(2) Multimeter, AN/PSM-4.

(3) RF Signal Generator CAQI-606A.

(4) Frequency Standard Test Set, TS-2134/WRC-1.

f. 1 MC Locked Oscillator, Component Location, Figure 5-62A.

4-228AE. 500 KC LOCKED OSCILLATOR, FUNCTIONAL DESCRIPTION.

4-228AF. The 500-kc locked oscillator derives the 500-kc signal from the 1-mc signal by syncing a 500-kc oscillator by means of the 1-mc signal. The circuit consists of the 500-kc locked oscillator Q4 and amplifier Q5. The 500-kc signal is the local carrier used in the mode selector A2A1A2 and triggers the 100-kc spectrum generator circuit A2A6A5A1. The following paragraph describes the operation of the 500-kc locked oscillator circuit.

4-228AG. The 1-mc signal at the emitter of the 1-mc locked oscillator Q2 is applied to the base of the 500-kc locked oscillator Q4. The resonant circuit in the collector of Q4 is tuned to 500-kc. The 1-mc signal locks the frequency of Q4 to 500-kc. The output of the oscillator is applied to the base of 500-kc, tuned amplifier Q5. The output of this amplifier is the secondary of T2 and is available at two output jacks J1-A1 and J1-A2.

4-228AH. 500 KC LOCKED OSCILLATOR TEST DATA.

4-228AI. Pertinent references and applicable test data for the 500-kc locked oscillator circuit are as follows:

a. Radio Receiver R-1051B/URR, Main Frame, Schematic Diagram, Figure 5-1A.

b. Frequency Standard Electronic Assembly, Servicing Block Diagram, Figure 4-56A.

c. Frequency Standard Electronic Assembly, Schematic Diagram, Figure 5-5A.

d. Refer to paragraph 2A-17 in Technical Manual for Repair of AN/WRC-1 and R-1051/URR 2N Modules, NAVSHIPS 0967-034-2000 for 500-kc locked oscillator adjustment procedures.

e. Required test equipment:

(1) RF Voltmeter CCVO-91CA.

(2) Multimeter AN/PSM-4.

(3) RF Signal Generator CAQI-606A.

(4) Frequency Standard Test Set TS-2134/WRC-1.

f. 5 MC Multiplier, Dividers and Comparator, Component and Test Point Location, Figure 5-62A.

4-229. 100 KC SPECTRUM GENERATOR FUNCTIONAL CIRCUIT DESCRIPTION.

4-230. The 100-kc spectrum generator (figure 4-31) consists of a trigger amplifier (Q1), a divide-by-five multivibrator (Q2 and Q3), a gate amplifier (Q4), a keyed oscillator (Q5), an amplifier (Q6), and a double tuned filter (L5 and T2). This circuit, which forms a part of Spectrum Generator Electronic Subassembly A2A6A5, produces a spectrum of frequencies between 15.3 and 16.2 mc. These frequencies are applied to 10.747 mc mixer A2A6A2A2 to produce the 10.747 mc reference frequency used for error cancellation in the 100 kc mixing frequency scheme. This circuit also provides the 100 kc trigger pulses to 10 kc spectrum

generator A2A6A5A2. The following paragraphs describe the operation of the 100 kc spectrum generator in detail.

4-231. The input to the 100 kc spectrum generator is the 500 kc sinusoidal output of 1 mc divide-by-two circuit A2A5A1. This signal is applied to auto-transformer L2, where it is stepped up and, in turn, coupled to the base of trigger amplifier Q1 by capacitor C3. A positive 20 vdc is applied to the 100 kc spectrum generator in all modes of operation from main frame power supply A2A8. The positive 20 vdc is regulated to 10 vdc by Zener diode CR1, which draws enough current, in addition to the current drawn by the load, to maintain a 10 vdc drop across R1. This regulated 10 vdc is used to provide a stable supply for trigger amplifier Q1 and multivibrator Q2, Q3. The negative halves of the 500 kc signal applied to the base of trigger amplifier Q1 are of sufficient magnitude to drive it into saturation. Thus, the collector of trigger amplifier Q1 is switched between zero (non-conducting) and 9.0 vdc (saturated). The small drop (1 volt) is caused by the small forward resistance of the diode and the collector-to-emitter resistance of the transistor. Diode CR2 provides temperature compensation for trigger amplifier Q1 and aids in the shaping of the positive output triggers. Resistor R2 is the base-return resistor, providing a discharge path for coupling capacitor C3. The output pulses from trigger amplifier Q1 are developed across resistor R3 and are differentiated by capacitor C4 together with the input impedance of divide-by-five multivibrator Q2, Q3. This results in a series of positive and negative triggers to multivibrator Q2, Q3 at a 500 kc repetition rate.

4-232. Divide-by-five multivibrator Q2, Q3 is an astable multivibrator, which is locked at a 500 kc rate. The following is a detailed discussion of multivibrator Q2, Q3 (see Timing Diagram, Figure 4-32). Multivibrator Q2, Q3 is free running until locked by the 500 kc input trigger pulses from trigger amplifier Q1. Assume that a positive trigger pulse is applied to the base of transistor Q2, and that transistors Q2 and Q3 are both cut off. The collector of transistor Q2 and the base of transistor Q3 are both at the voltage supply level (10 vdc) at this time. When the input pulse causes transistor Q2 to conduct, a voltage drop is developed across resistor R6, decreasing the voltage at the base of transistor Q3. Since the emitter of transistor Q3 is essentially at the supply voltage level (when it is cut off), transistor Q3 becomes forward-biased and begins to conduct. Conduction causes the collector of transistor Q3 to go from 0 volts (no conduction) to approximately 9 volts. The 1 volt drop from the 10 vdc supply voltage level is caused by the small forward drop of diode CR3 and the collector-to-emitter drop of transistor Q3. The base voltage divider for transistor Q2 (R4, R5, R7) now has the 9 vdc (collector voltage of transistor Q3) at one end and the 10 vdc supply voltage at the other end. This causes transistor Q2 to become saturated. Therefore, transistors Q2 and Q3 are now both in saturation. Capacitor C6 now charges through two paths. One path is through transistor Q2 and resistors R4.

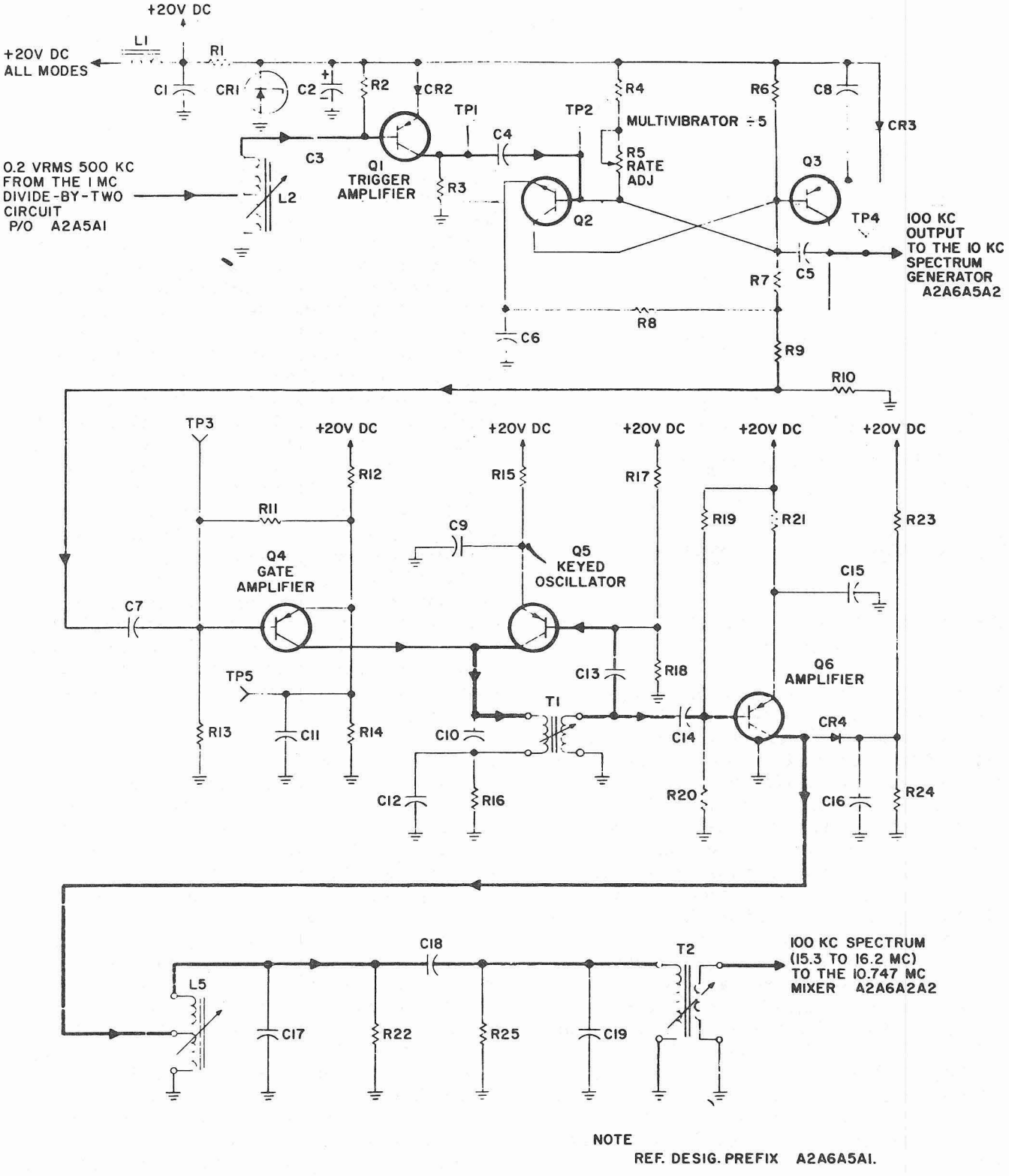

Figure 4-31. 100 KC Spectrum Generator, Simplified Schematic Diagram

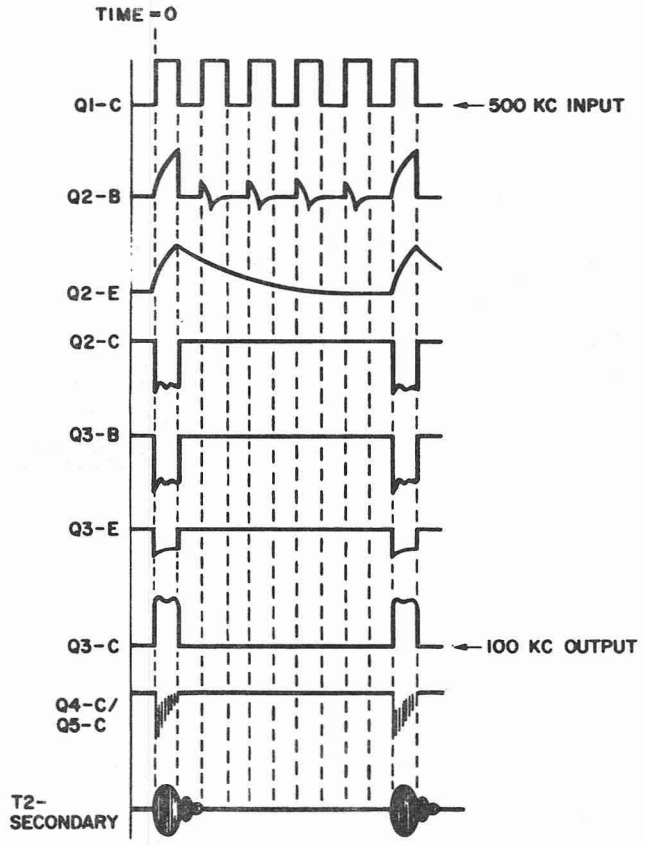

Figure 4-32. Divide-By-Five Multivibrator, Timing Diagram

R5, and R6. The other path is through resistor R8, transistor Q3, and diode CR3. As capacitor C6 charges, the emitter voltage of transistor Q2 increases, resulting in a decrease of forward-bias on transistor Q2. This reduces the collector current of transistor Q2, resulting in a decreased drop across resistor R6. Therefore, the base voltage on transistor Q3 will start to go positive, resulting in a decrease of its forward-bias. The collector current for transistor Q3 then begins to decrease as the forward-bias decreases. Therefore, the collector voltage of transistor Q3 begins to decrease, increasing the voltage across the base voltage divider of transistor Q2. This reduces the forward-bias of transistor Q2 even more. This regeneration brings transistors Q2 and Q3 out of saturation and continues until they are both cut off. Capacitor C6 now starts to discharge through resistors R10, R9, and R8. During this discharge period, the positive and negative trigger pulses are still applied to the base of transistor Q2, but are not of sufficient amplitude to forward-bias and turn on transistor Q2. When transistors Q2 and Q3 are cut off, the base bias of transistor Q2 is determined by voltage divider R4, R5, R7, R9, R10. The emitter voltage of transistor Q2 is the charge on capacitor C6. Therefore, capacitor C6 must discharge to such a level that a positive trigger pulse applied to the base of transistor Q2 increases the base voltage beyond the emitter voltage, before transistor Q2 can again be forward-biased into conduction. The time constant of the RC network, C6, R8, R9, and R10, is fixed such that resistor R5 can adjust the bias on transistor Q2 to a level which allows every sixth positive trigger pulse, after the initial trigger pulse, to turn transistor Q2 on. When this occurs, the collector voltage on transistor Q2 will again drop, and the regeneration process described above will be repeated. Thus, the process of regeneration occurs before the natural period has been completed and is triggered by every sixth positive trigger pulse on the base of transistor Q2. This results in an output (collector of transistor Q3) that is exactly one-fifth of the input trigger pulse rate. The 100 kc signal present on the collector of transistor Q3 is applied to the 10 kc spectrum generator. Capacitor C8 prevents any degeneration that may be introduced by the small forward resistance of diode CR3. Capacitor C5 speeds up the application of the pulses from the collector of transistor Q3 to the base of transistor Q2. The 100 kc output signal from multivibrator Q2, Q3, which is developed across voltage divider R9, R10, is coupled to the base of gate amplifier Q4 by capacitor C7.

4-233. During the off time of multivibrator Q2, Q3, gate amplifier Q4 is forward-biased to saturation. Forward-bias voltage for gate amplifier Q4 is developed by voltage dividers R12, R14 and R12, R11, R13 from the positive 20 vdc supplied. Capacitor C11 is the emitter by pass capacitor. When gate amplifier Q4 conducts, the base is at approximately 10. 1 vdc and the emitter is at approximately 10. 3 vdc: the drop is caused by the small emitter-to-base resistance. With gate amplifier Q4 in saturation, the tank circuit (capacitor C10 and the primary of transformer T1) of keyed oscillator Q5 will be heavily loaded by the small collector-to-emitter resistance of gate amplifier Q4, preventing regeneration. When a positive pulse is coupled to the base of gate amplifier Q4, the transistor is reverse-biased and cut off for the duration of the pulse. This removes the load from the tank circuit of keyed oscillator Q5, permitting it to oscillate at its natural frequency. Resistor R16 limits the current

flow through gate amplifier Q4 during saturation.

4-234. Bias voltage for oscillator Q5 is developed by voltage divider R17, R18 and emitter resistor R15 from the positive 20 vdc supplied. Capacitor C9 is the emitter bypass capacitor. When the load created by the conduction of gate amplifier Q4 is removed from the tank circuit of keyed oscillator Q5, the tank circuit will produce a sinusoidal burst of frequencies 0.8 microseconds in duration. This results in a spectrum of frequencies centered around the free running frequency of keyed oscillator Q5. The desired spectrum consists of ten spectrum points, which are below the free running (center) frequency of keyed oscillator Q5 and are separated by the 100 kc keying rate. The secondary of transformer T1 and capacitor C13 provide the required feedback path for keyed oscillator Q5, so that the necessary loop gain can be developed to sustain oscillations. Capacitor C12 is an rf bypass, for resistor R16, at the output frequency of keyed oscillator Q5.

4-235. The spectrum output from the tank circuit is coupled to the base of amplifier Q6 by capacitor C14. Operating voltage for amplifier Q6 is developed by voltage divider R19, R20 and emitter resistor R21 from the positive 20 vdc supplied. The output of amplifier Q6 is limited by diode CR4. The amount of limiting is adjusted by selecting the value of resistor R24. Resistor R23 and R24 form a voltage divider that develops the cathode bias on limiter CR4. Capacitors C15 and C16 are bypass capacitors. The output of amplifier Q6 is developed across a tuned circuit consisting of capacitor C17 and inductor L5. Resistor R22 increases the bandwidth of the tuned circuit and ensures uniformity. The output from tuned circuit L5, C17 is coupled by capacitor C18 to another tuned circuit consisting of capacitor C19 and the primary of transformer T2. Resistor R25 increases the bandwidth of this tuned circuit. The passband of these two tuned filters is sufficient to pass the desired 15.3 to 16.2 mc spectrum, but has sufficient selectivity to eliminate all the undesired harmonics and products produced by keyed oscillator Q5. The output from the 100 kc spectrum generator is coupled to 10.747 mc mixer A2A6A2A2.

4-236. 100 KC SPECTRUM GENERATOR, TEST DATA.

4-237. Pertinent references and applicable test data for the 100 kc spectrum generator are as follows:

a. Radio Receiver R-1051/URR, Main Frame, Schematic Diagram, Figure 5-1.

b. Spectrum Generator Electronic Subassembly, Servicing Block Diagram, Figure 4-57.

c. Spectrum Generator Electronic Subassembly, Schematic Diagram, Figure 5-10.

d. 100 KC Spectrum Generator, Component and Test-Point Location, Figure 5-96.

(e) Required Test Equipment:

(1) RF Signal Generator, CAQI-606A.

(2) Oscilloscope, AN/USM-105A.

(3) Electronic Multimeter, CCV0-91CA.

(4) Multimeter, AN/PSM-4.

(5) Translator/Synthesizer Test Set, TS-2133/WRC-1.

(f) Refer to paragraph 3-26 in Technical Manual for Repair of AN/WRC-1 and R-1051/URR 2N Modules, NAVSHIPS 95700, for 100 kc spectrum generator adjustment procedures.

4-238. 10.747 MC MIXER, FUNCTIONAL CIRCUIT DESCRIPTION.

4-239. The 10.747 mc mixer (figure 4-33) consists of an isolation amplifier (Q2), a mixer (Q1), and a 10.747 mc crystal filter (FL1). These circuits, which form a part of 100 KC Synthesizer Electronic Subassembly A2A6A2, produce a 10.747 mc output at a level suitable for use in 17.847/27.847 mc mixer A2A6A2A3. The following paragraphs describe the operation of the 10.747 mc mixer in detail.

4-240. The 4.553 to 5.453 mc output from the 4.553 to 5.453 mc oscillator is coupled to the emitter of isolation amplifier Q2 by capacitor C7. Operating voltage for isolation amplifier Q2 is developed by voltage divider R4, R5 and emitter resistor R7 from the positive 20 vdc supply line. Resistor R6 and capacitor C6 provide decoupling to prevent any interaction with other circuits connected to the positive 20 vdc supply line. Capacitor C3 is an rf bypass capacitor. Isolation amplifier Q2 is a grounded-base amplifier, which prevents the spectrum frequencies and mixer products of mixer Q1 from being fed back into the hi-band/lo-band

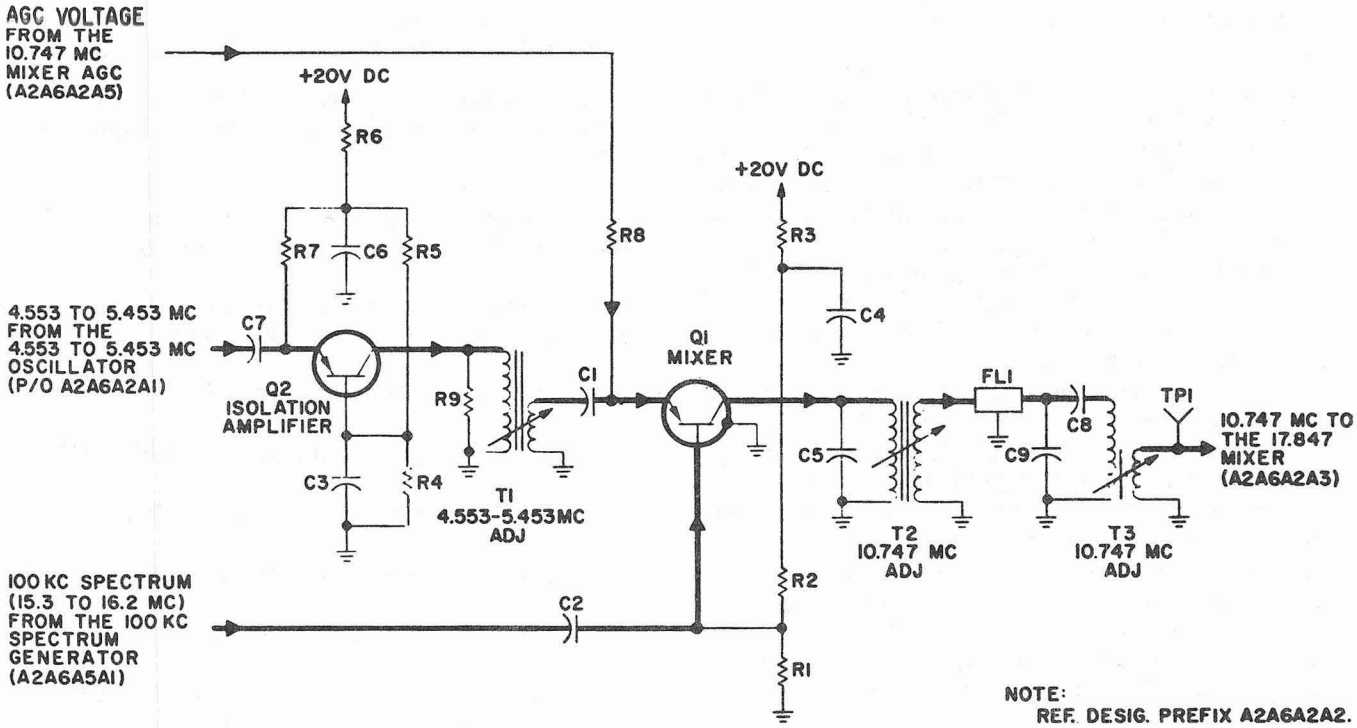

Figure 4-33. 10.747 MC Mixer, Simplified Schematic Diagram

mixer/amplifier circuits via the 4.553 to 5.453 mc oscillator circuits. The output of isolation amplifier Q2 is developed across the primary of transformer T1. Resistor R9 is used to ensure uniformity of the signal developed across transformer T1.

4-241. The 4.553 to 5.453 mc output from isolation amplifier Q2 is coupled to the emitter of mixer Q1 by capacitor C1. The 100 kc spectrum (15.3 to 16.2 mc) from the 100 kc spectrum generator is coupled to the base of mixer Q1 by capacitor C2. Base bias for mixer Q1 is developed by voltage divider R1, R2 from the positive 20 vdc supply line. Resistor R3 and capacitor C4 provide decoupling to prevent any interaction with the other circuits connected to the positive 20 vdc supply line. The emitter bias for mixer Q1 is developed from the output of the 10.747 mc mixer agc circuit by emitter resistor R8. The agc voltage is a variable voltage that controls the amount of forward-biasing, and thereby, the gain of mixer Q1. The output of the 4.553 to 5.453 mc oscillator is mixed with each of the ten spectrum points applied by the 100 kc spectrum generator. The resulting mixer products are developed across a tuned circuit consisting of capacitor C5 and the primary of transformer T2. This circuit is tuned to 10.747 mc, the desired mixer product. Transformer T2 couples the output from mixer Q1 to filter FL1. Filter FL1 is a crystal lattice filter tuned to 10.747 mc to eliminate all other mixing products. The 10.747 mc output from filter FL1 is developed across the tuned circuit consisting of capacitors C8 and C9 and the primary of transformer T3. The output from the 10.747 mc mixer circuit is coupled to 17.847/27.847 mc mixer A2A6A2A3 by transformer T3.

4-242. 10.747 MC MIXER, TEST DATA.

4-243. Pertinent references and applicable test data for the 10.747 mc mixer are as follows:

a. Radio Receiver R-1051/URR, Schematic Diagram, Figure 5-1.

b. 100 KC Synthesizer Electronic Subassembly, Servicing Block Diagram, Figure 4-60.

c. 100 KC Synthesizer Electronic Subassembly, Schematic Diagram, Figure 5-7.

d. 10.747 MC Mixer, Component and Test-Point Location, Figure 5-78.

e. Required Test Equipment:

(1) RF Signal Generator, CAQI-606A.

(2) Electronic Multimeter, CCV0-91CA.

(3) Oscilloscope, AN/USM-105A.

(4) Multimeter, AN/PSM-4

(5) Translator/Synthesizer Test Set, TS-2133/WRC-1.

f. Refer to paragraph 3-32 in Technical Manual for Repair of AN/WRC-1 and R-1051/URR 2N Modules, NAVSHIPS 95700, for 10.747 mc mixer adjustment procedures.

4-244. 10.747 MC MIXER AGC, FUNCTIONAL CIRCUIT DESCRIPTION.

4-245. The 10.747 mc mixer agc circuit (figure 4-34) consists of two agc amplifiers (Q2 and Q3), and detector (Q4). These circuits, which form a part of 100 KC Synthesizer Electronic Subassembly A2A6A2, produce an agc voltage which is used to control the gain of mixer Q1 in 10.747 mc mixer A2A6A2A2. These circuits are used in all modes of operation. The following paragraphs describe the operation of the 10.747 mc mixer agc circuit in detail.

4-246. The 22.4 to 23.3 mc or 32.4 to 33.3 mc output from the hi-band/lo-band mixer/amplifier is coupled to the base of agc amplifier Q2 by capacitor C4. Bias voltage for agc amplifier Q2 is developed by voltage divider R4, R5 from the positive 20 vdc supply line. Inductor L2 is a peaking coil which compensates high frequency roll-off, and provides a uniform output for both the hi- and lo-band mixing frequencies. Resistor R7 develops enough degeneration to flatten the frequency response and provide stability. Resistor R8 is the emitter resistor, which is rf bypassed by capacitor C6. The output of agc amplifier Q2 is developed across resistor R6 and inductor L2, and is coupled to the base of agc amplifier Q3 by capacitor C7.

4-247. Bias voltage for agc amplifier Q3 is developed by voltage divider R9, R10 from the positive 20 vdc supply line. Resistors R12 and R13 develop degeneration for increased stability and for controlling the agc loop gain. The gain of agc amplifier Q3 is set by adjusting potentiometer R13. Resistor R14 is the emitter resistor, which is rf bypassed by capacitor C9. The output of agc amplifier Q3 is developed across resistor R11 and is coupled to the base of detector Q4 by capacitor C8.

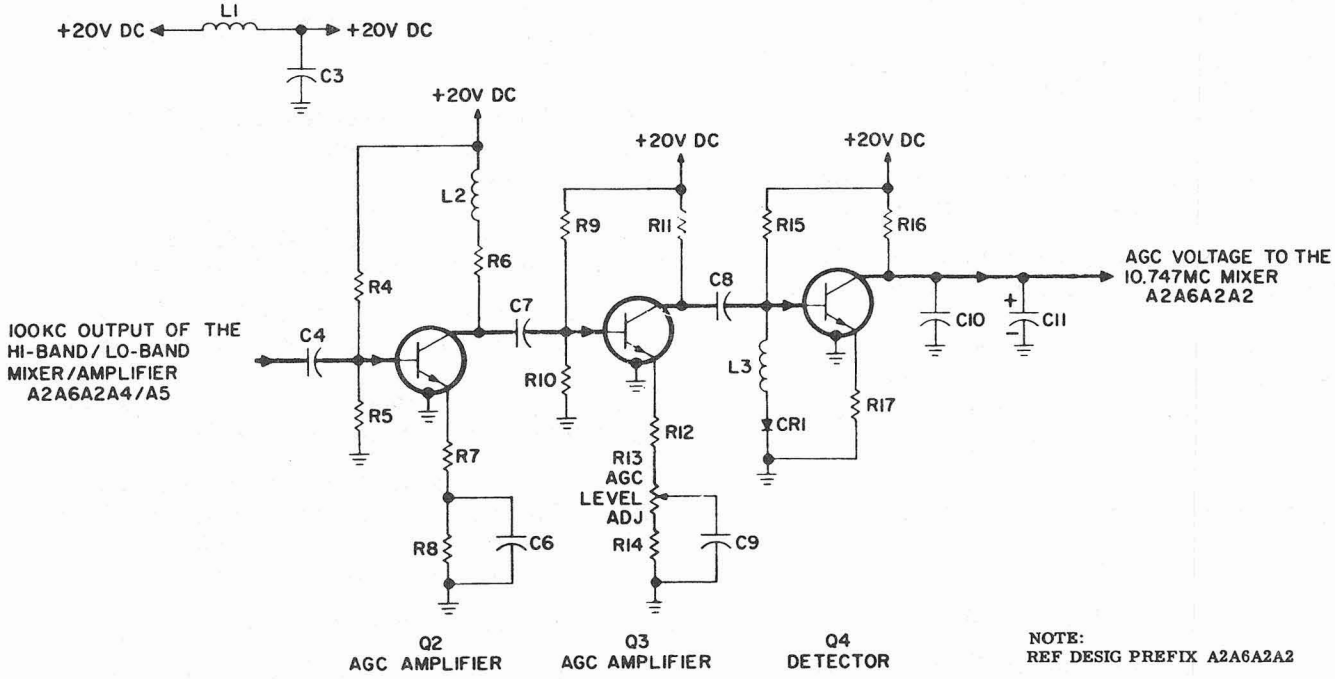

Figure 4-34. 10.747 MC Mixer AGC, Simplified Schematic Diagram

4-248. Bias voltage for detector Q4 is developed by resistor R15, inductor L3, and diode CR1 from the positive 20 vdc supply line. Inductor L3 provides a high input impedance and a low dc resistance to the ac signal. This prevents loading the output of agc amplifier Q3. Diode CR1 is used to compensate for temperature variations in the base-to-emitter circuit of detector Q4. Resistor R17 provides a small amount of degeneration to improve the stability of detector Q4. With no signal applied, detector Q4 is non-conducting. The positive portions of the applied signal forward-bias the base-to-emitter diode of detector Q4, causing current to flow. Capacitor C11 starts to charge to the 20 vdc when there is no collector current in detector Q4. When collector current starts to flow, the collector voltage drops, causing capacitors C10 and C11 to discharge through transistor Q4. Once the output of agc amplifier Q3 reaches a steady state, each input cycle sustains the charge on capacitors C10 and C11, preventing fluctuations in the dc output voltage. Since this circuit forms a closed loop with all the other circuits of the 100 KC Synthesizer Electronic Subassembly, the gain of all circuits will reach a steady state condition, thus maintaining a constant output from detector Q4, and a constant output from the hi-band/lo-band mixer/amplifier A2A5A2A4/A5.

4-249. 10.747 MC MIXER AGC, TEST DATA.

4-250. Pertinent references and applicable test data for the 10.747 mc mixer are as follows:

a. Radio Receiver R-1051/URR, Main Frame, Schematic Diagram, Figure 5-1.

b. 100 KC Synthesizer Electronic Subassembly, Servicing Diagram, Figure 4-60.

c. 100 KC Synthesizer Electronic Subassembly, Schematic Diagram, Figure 5-7.

d. 10.747 MC Mixer AGC, Component and Test-Point Location, Figure 5-80.

e. Required Test Equipment:

(1) RF Signal Generator, CAQI-606A.

(3) Multimeter, AN/PSM-4.

(2) Oscilloscope, AN/USM-105A.

(4) Translator/Synthesizer Test Set, TS-2133/WRC-1.

f. Refer to paragraph 3-32 in Technical Manual for Repair of AN/WRC-1 and R-1051/URR 2N Modules, NAVSHIPS 95700, for 10.747 mc mixer agc adjustment procedures.

4-251. 5 MC MULTIPLY-BY-TWO, FUNCTIONAL CIRCUIT DESCRIPTION.

4-252. The 5 mc multiply-by-two circuit (figure 4-35) doubles the 5 mc input signal from switch A2A5S1 in the comparator circuit, for use in 17.847/27.847 mc mixer A2A6A2A3. This circuit consists of a 10 mc amplifier (Q4) and is part of Frequency Standard Electronic Assembly A2A5. The following paragraph describes the operation of this circuit in detail.

4-253. The 5 mc input signal, from the comparator circuit, is coupled to the base of 10 mc amplifier Q4 by capacitor C17. Bias for the base of 10 mc amplifier Q4 is provided by voltage divider R15, R16. Resistor R14 is the emitter resistor, which is rf bypassed by capacitor C15. The tuned output circuit, consisting of the primary of transformer T4 and capacitor C16, is tuned to 10 mc. Since this stage is biased so that the amplification is non-linear, the second harmonic (10 mc) of the 5 mc signal will be produced and amplified. The 10 mc signal is coupled through transformer T4 and applied to the 17.847/27.847 mc mixer.

4-254. 5 MC MULTIPLY-BY-TWO, TEST DATA.

4-255. Pertinent references and applicable test data for the 5 mc multiply-by-two circuit are as follows:

a. Radio Receiver R-1051/URR, Main Frame, Schematic Diagram, Figure 5-1.

b. Frequency Standard Electronic Assembly, Servicing Block Diagram, Figure 4-56.

c. Frequency Standard Electronic Assembly, Schematic Diagram, Figure 5-5.

d. Refer to paragraph 2-25 in Technical Manual for Repair of AN/WRC-1 and R-1051/URR 2N Modules, NAVSHIPS 95700, for 5 mc multiply-by-two adjustment procedures.

e. Required Test Equipment:

(1) Electronic Multimeter, CCVO-91CA.

(2) Multimeter, AN/PSM-4.

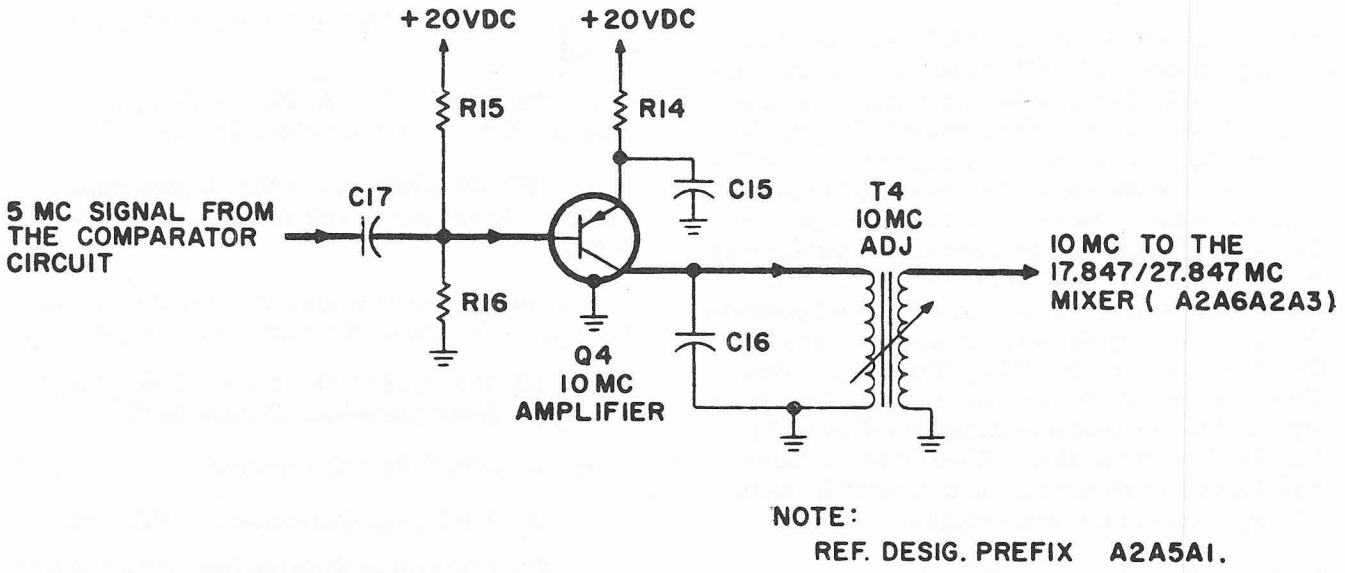

Figure 4-35. 5 MC Multiply-By-Two, Simplified Schematic Diagram

(3) RF Signal Generator, CAQI-606A.

(4) Frequency Standard Test Set, TS-2134/WRC-1.

f. 5 MC Multiplier, Divider and Comparator, Component and Test-Point Location, Figure 5-61.

4-256. 17.847/27.847 MC MIXER, FUNCTIONAL CIRCUIT DESCRIPTION.

4-257. The 17.847/27.847 mc mixer (figure 4-36) consists of two mixers (Q1 and Q2), a gating circuit (CR1, CR3), a 17.847 mc filter (Y1), and a 27.847 mc filter (Y2). These circuits, which form a part of 100 KC Synthesizer Electronic Subassembly A2A6A2, produce either a 17.847 mc or 27.847 mc frequency for use in the mixing circuits of the hi-band/lo-band mixer/amplifier. These circuits are used in all modes of operation. The following paragraphs describe the operation of the 17.847/27.847 mc mixer in detail.

4-258. The 7.1 mc output from the 7.1 mc mixer is coupled to the emitter of mixer Q1 by capacitor C5. The 10.747 mc output from 10.747 mc mixer A2A6A4A1 is coupled to the base of mixer Q1 by capacitor C1. Operating voltage for mixer Q1 is developed by voltage divider R1, R2 and emitter resistor R4 from the positive 20 vdc supply line. Resistor R3 and capacitor C6 provide decoupling to prevent interaction with the other circuits connected to the 20 vdc supply line. Resistor R16 is the terminating resistor for the 7.1 mc input signal. Mixer Q1 mixes the two input signals and develops the resulting mixing products across the tuned circuit consisting of capacitor C7 and the primary of transformer T1. The circuit is tuned to 17.747 mc, the desired additive product.

4-259. The output of mixer Q1 is coupled to a crystal filter consisting of transformers T1 and T2, capacitors C8 and C9, and crystal Y1. Crystal Y1 is series resonant at 17.847 mc to pass the desired additive mixing product. Since the crystal can also be parallel resonated with its own shunt capacitance, capacitor C8 and the bottom half of transformer T2 primary are adjusted to cancel the effect of this shunt capacitance. The output of the filter is coupled to the hi-band/lo-band mixer/amplifier (when the lo-band of mixing frequencies is required) and to the base of mixer Q2 (when the hi-band of mixing frequencies is required) by transformer T2. Resistor R5 is the termination for the crystal filter.

4-260. The 10 mc signal from the 5 mc multiply-by-two circuit (P/O A2A5A1) is coupled to the anode of diode CR1 by capacitor C15. Zener diode CR2 regulates the positive 20 vdc to 10 vdc by drawing enough current, in addition to the load current, to maintain a 10 vdc drop across resistor R12. The regulated 10 vdc is applied to the cathode of diode CR3 and to the anode of diode CR1 through isolating resistor R11. When the lo-band output from the hi-band/lo-band mixer/amplifier is required, 20

vdc is applied to resistors R6, R10 and R14. Voltage divider R6, R7, which biases the base of mixer Q2, then has 20 vdc applied to both ends. Thus, mixer Q2 is biased off when the lo-band of frequencies is being used. The lo-band positive 20 vdc is also applied through resistor R10 to the cathode of diode CR1. Therefore, when the lo-band of frequencies is being used, diode CR1 is back-biased and blocks the 10 mc signal. The lo-band positive 20 vdc is also applied to the anode of diode CR3 through resistor R14. Therefore, diode CR3 is forward-biased and conducts the 10 mc signal through coupling capacitor C16 to 51 ohm load resistor R13. Therefore, resistor R13 loads the 10 mc signal when the lo-band mixing frequencies are required.

4-261. When the hi-band mixing frequencies are required, a ground is applied to resistors R14, R10, and R6. The ground is applied through isolating resistors R14 and R10 to diodes CR3 and CR1, respectively. This back-biases diode CR3 and forward-biases diode CR1. When diode CR1 is forward-biased, it conducts the 10 mc signal through coupling capacitor C13 to the emitter of mixer Q2.

4-262. Operating voltage for mixer Q2 is developed by voltage divider R6, R7 and emitter resistor R9 from the positive 20 vdc supply line. Resistor R8 and capacitor C11 provide decoupling to prevent interaction with other circuits connected to the positive 20 vdc supply line. Capacitor C12 is the emitter bypass capacitor. The 17.847 mc output from the crystal filter is coupled to the base of mixer Q2 by capacitor 10. The 17.847 mc and 10 mc signals are mixed, and the resulting products are developed across the tuned circuit consisting of capacitor C18 and the primary of transformer T3. This circuit is tuned to 27.847 mc, the desired additive mixer product. Transformer T3 couples the output of mixer Q2 to a crystal filter consisting of crystal Y2, transformers T3 and T4, and capacitors C19, and C20, which have the same functions as the corresponding components in the 17.847 mc crystal filter. Resistor is the termination impedance for the crystal filter. The output of this crystal filter is coupled to the hi-band/lo-band mixer/amplifier by transformer T4.

4-263. 17.847/27.847 MC MIXER, TEST DATA.

4-264. Pertinent references and applicable test data for the 17.847/27.847 mc mixer are as follows:

a. Radio Receiver R-1051/URR, Main Frame, Schematic Diagram, Figure 5-1.

b. 100 KC Synthesizer Electronic Subassembly, Servicing Block Diagram, Figure 4-60.

c. 100 KC Synthesizer Electronic Subassembly, Schematic Diagram, Figure 5-7.

d. 17.847/27.847 MC Mixer, Component and Test-Point Location, Figure 5-72.

e. Required Test Equipment:

(1) RF Signal Generator, CAQI-606A.

(2) Electronic Multimeter, CCVO-91CA.

(3) Frequency Meter, CAQI-S24D.

(4) Multimeter, AN/PSM-4.

(5) Translator/Synthesizer Test Set, TS-2133/WRC-1.

f. Refer to paragraph 3-32 in Technical Manual for Repair of AN/WRC-1 and R-1051/URR 2N Modules, NAVSHIPS 95700, for 17.847/27.847 mc adjustment procedures.

4-265. 10 KC SPECTRUM GENERATOR, FUNCTIONAL CIRCUIT DESCRIPTION.

4-266. The 10 kc spectrum generator (figure 4-37) consists of a divide-by-two multivibrator (Q1, Q2), a divide-by-five multivibrator (Q3, Q4), a gate amplifier (Q5), and a keyed oscillator (Q6). These circuits, which form a part of Spectrum Generator Electronic Subassembly A2A6A5, produce a spectrum of frequencies between 3.82 and 3.91 mc. This spectrum is applied to the 9.07 mc error mixer, which is part of A2A6A3A4, to produce the reference frequencies used in the error cancelling scheme. These circuits also provide the 10 kc trigger pulses to the 1 kc spectrum generator. The 10 kc spectrum generator is used in all modes of operation. The following paragraphs describe the operation of the 10 kc spectrum generator in detail.

4-267. The input to the 10 kc spectrum generator is the 100 kc pulsed output of the 100 kc spectrum generator. A positive 20 vdc is applied to the 10 kc spectrum generator in all modes of operation by main frame power supply

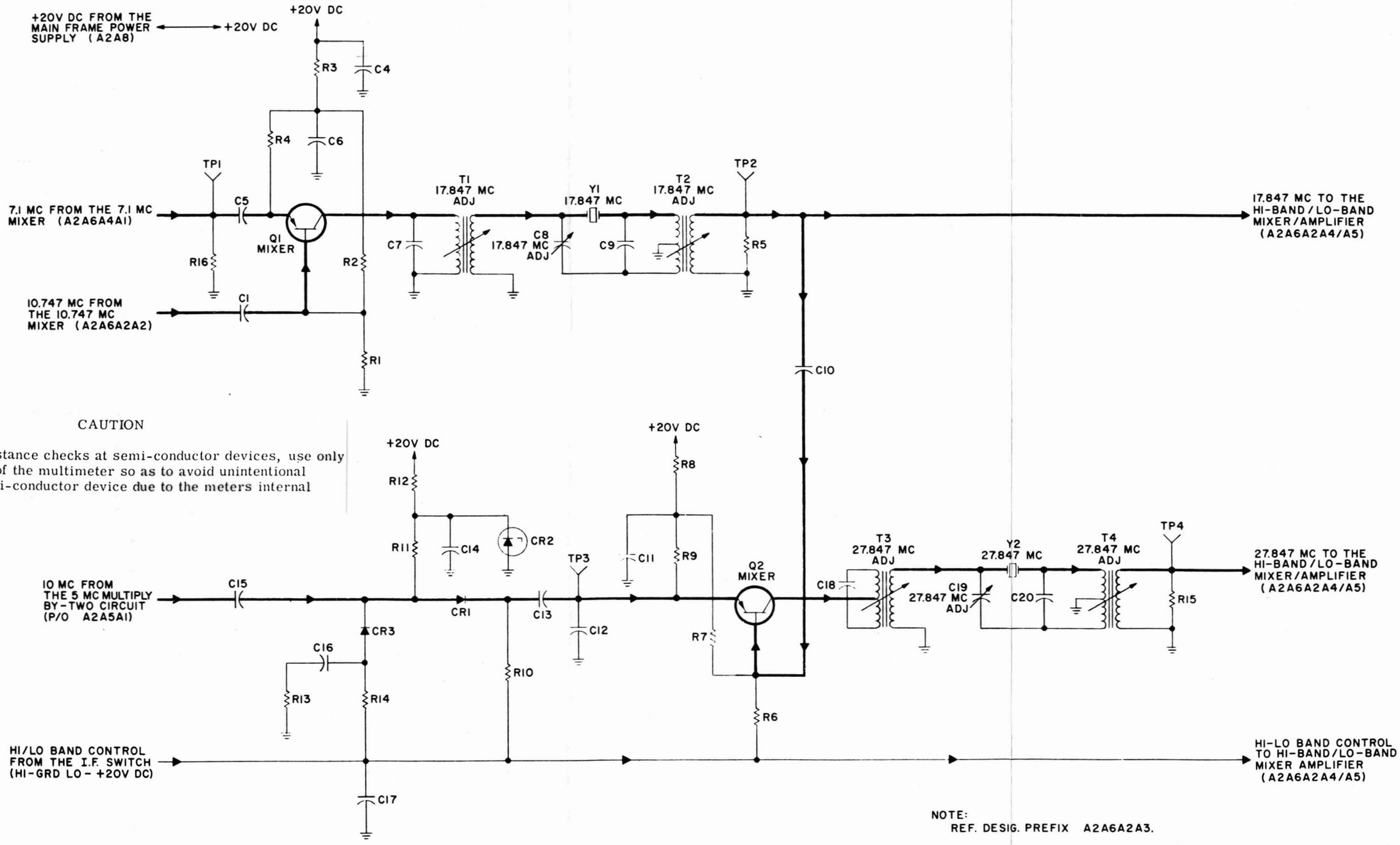

NOTE:
REF. DESIG. PREFIX A2A6A2A3.

Figure 4-36. 17.847/27.847 MC Mixer, Simplified Schematic Diagram

CAUTION

When making resistance checks at semi-conductor devices, use only the higher scales of the multimeter so as to avoid unintentional damage to the semi-conductor device due to the meters internal voltage.

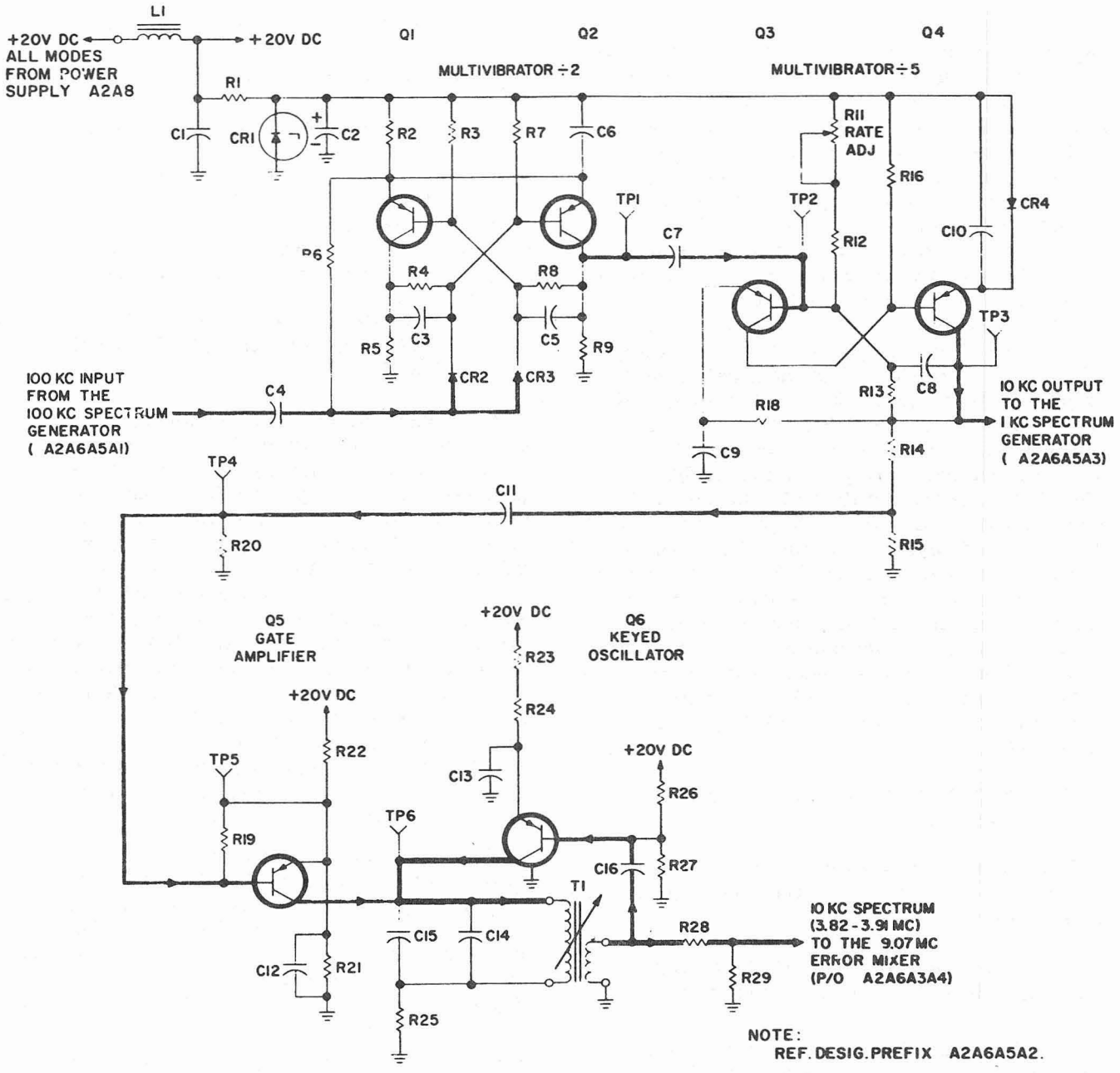

Figure 4-37. 10 KC Spectrum Generator, Simplified Schematic Diagram

A2A8. The positive 20 vdc is regulated to 10 vdc by Zener diode CR1, which draws enough current, in addition to the current drawn by the load, to maintain a 10 vdc drop across resistor R1. The regulated 10 vdc is the stable supply voltage for divide-by-two multivibrator Q1, Q2 and divide-by-five multivibrator Q3, Q4.

4-268. Divide-by-two multivibrator Q1, Q2 is a conventional bistable multivibrator, producing one output pulse for every two input pulses. The 100 kc input pulses are differentiated by capacitor C4 and the input impedance of multivibrator Q1, Q2. The resulting positive triggers are directed to the saturated transistor of the divide-by-two multivibrator Q1, Q2 by steering diodes CR2 and CR3. This cuts off the saturated transistor and starts the process of regeneration. Resistor R6 references the anodes of steering diodes CR2 and CR3 to the same potential as the emitters of transistors Q1 and Q2, and provides the return path for capacitor C4.

4-269. The output of divide-by-two multivibrator Q1, Q2 is a square wave at a 50 kc re-

petition rate. This signal is differentiated by capacitor C7 and the input impedance of divide-by-five multivibrator Q3, Q4. The resulting positive pulses are used to trigger divide-by-five multivibrator Q3, Q4. Divide-by-five multivibrator Q3, Q4 is identical to divide-by-five multivibrator Q2, Q3 in the 100 kc spectrum generator (refer to paragraph 4-232), except for the time constants. The 10 kc output signal from divide-by-five multivibrator Q3, Q4 is applied directly to the 1 kc spectrum generator. The 10 kc output signal is also divided by resistors R14 and R15 and coupled to the base of gate amplifier Q5 by capacitor C11. Gate amplifier Q5 is identical to gate amplifier Q4 in the 100 kc spectrum generator (refer to paragraph 4-233). Gate amplifier Q5 turns keyed oscillator Q6 on and off at a 10 kc repetition rate. Keyed oscillator Q6 is identical to keyed oscillator Q5 in the 100 kc spectrum generator (refer to paragraph 4-234). The output of keyed oscillator Q6 is a sinusoidal burst of frequencies about 0.7 microseconds in duration, repeated at a 10 kc rate. The spectrum of frequencies thus produced is 3.82 to 3.91 mc; the spectrum points are separated by 10 kc. The output of keyed oscillator Q6 is divided by resistors R28 and R29, and applied to the 9.07 mc error mixer which is part of A2A6A3A4.

4-270. 10 KC SPECTRUM GENERATOR, TEST DATA.

4-271. Pertinent references and applicable test data for the 10 kc spectrum generator are as follows:

a. Radio Receiver R-1051/URR, Main Frame, Schematic Diagram, Figure 5-1.

b. Spectrum Generator Electronic Subassembly, Servicing Block Diagram, Figure 4-57.

c. Spectrum Generator Electronic Subassembly, Schematic Diagram, Figure 5-10.

d. 10 KC Spectrum Generator, Component and Test-Point Location, Figure 5-97.

e. Required Test Equipment:

(1) RF Signal Generator, CAQI-606A.

(2) Electronic Multimeter, CCVO-91CA.

(3) Oscilloscope, AN/USM-105A.

(4) Frequency Meter, CAQI-524D.

(5) Multimeter, AN/PSM-4.

(6) Translator/Synthesizer Test Set, TS-2133/WRC-1.

f. Refer to paragraph 3-26 in Technical Manual for Repair of AN/WRC-1 and R-1051/URR 2N Modules, NAVSHIPS 95700, for 10 kc spectrum generator adjustment procedure.

4-272. 1 KC SPECTRUM GENERATOR, FUNCTIONAL CIRCUIT DESCRIPTION.

4-273. The 1 kc spectrum generator (figure 4-38) consists of a divide-by-two multivibrator (Q1, Q2), a divide-by-five multivibrator (Q3, Q4), a gate amplifier (Q5), and a keyed oscillator (Q6). These circuits, which form a part of the Spectrum Generator Electronic Subassembly A2A6A5, produce a spectrum of frequencies between 0.122 and 0.131 mc. This spectrum is applied to the 1.981 mc error mixer, which is part of A2A6A3A4, to produce the reference frequencies used in error cancellation. These circuits also provide the 5 kc trigger frequency to the 5 kc spectrum generator. The 1 kc spectrum generator is used in all modes of operation. The following paragraphs describe the operation of the 1 kc spectrum generator in detail.

4-274. The input to the 1 kc spectrum generator is the 10 kc pulsed output of the 10 kc spectrum generator. This input signal is differentiated by capacitor C4 and the input impedance of divide-by-two multivibrator Q1, Q2. The resulting positive pulses trigger divide-by-two multivibrator Q1, Q2. Divide-by-two multivibrator Q1, Q2 is identical to divide-by-two multivibrator Q1, Q2 in the 10 kc spectrum generator (refer to paragraph 4-268), except for the additional output. The 5 kc pulsed output of the divide-by-two multivibrator is divided by voltage divider R9, R10 and applied to the 5 kc spectrum generator as trigger pulses. The 5 kc pulsed output of the divide-by-two multivibrator is also differentiated by capacitor C7 and the input impedance of divide-by-five multivibrator Q3, Q4. Diode CR4 provides a fast turn-on time for transistor Q3 and holds transistor Q3 in saturation during its conductive period. Divide-by-five multivibrator Q3, Q4 is identical to divide-by-five multivibrator Q3, Q4 in the 100 kc spectrum generator (refer to paragraph 4-232),

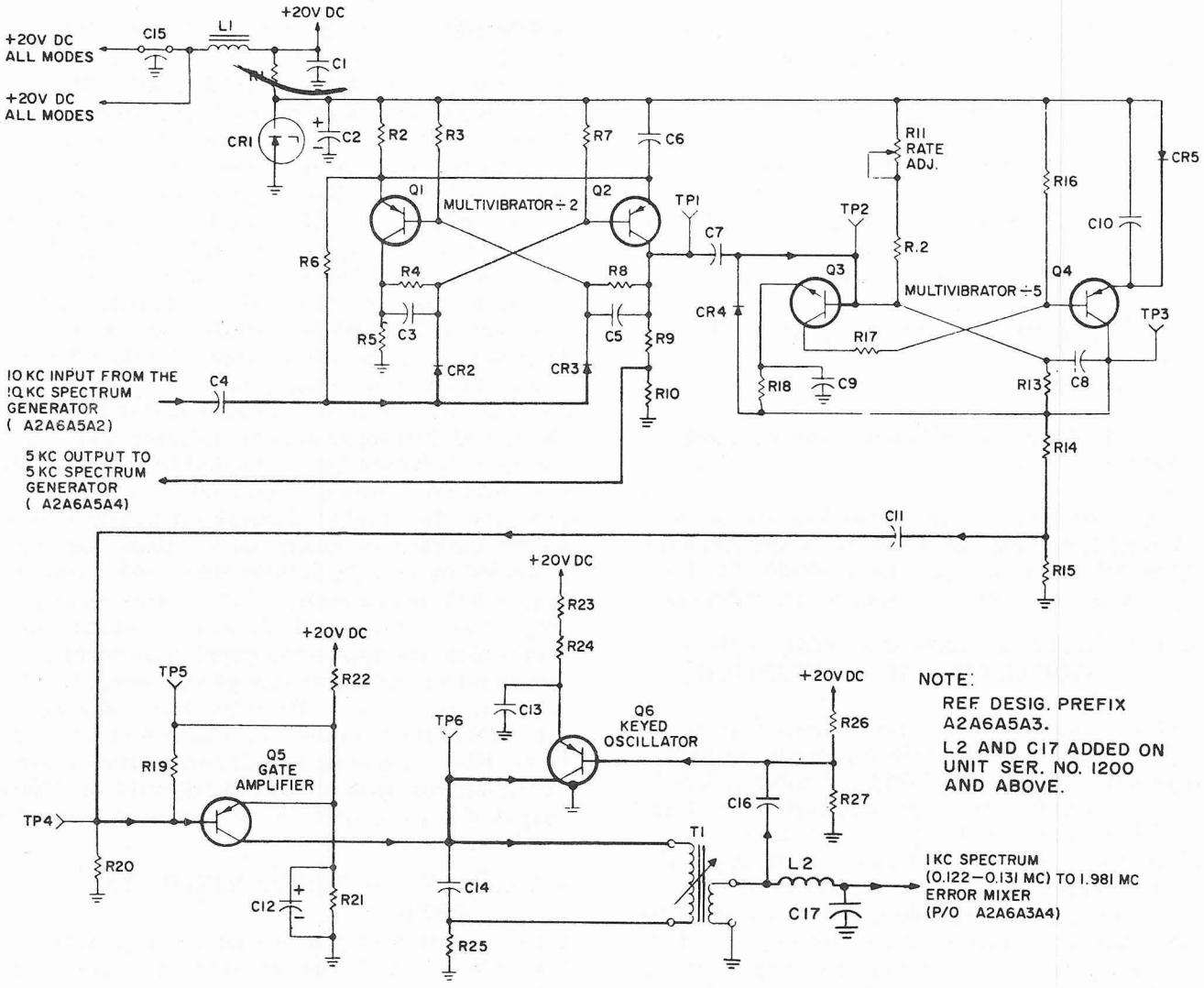

Figure 4-38. 1 KC Spectrum Generator, Simplified Schematic Diagram

except for the time constants. The 1 kc pulsed output of divide-by-five multivibrator Q3, Q4 is coupled to the base of gate amplifier Q5. Gate amplifier Q5 is identical to gate amplifier Q4 in the 100 kc spectrum generator (refer to paragraph 4-233). Gate amplifier Q5 turns keyed oscillator Q6 on and off at a 1 kc repetition rate. Keyed oscillator Q6 is identical to keyed oscillator Q5 in the 100 kc spectrum generator (see paragraph 4-234). The output of keyed oscillator Q6 is a 10-microsecond sinusoidal burst of frequencies filtered by L2 and C17. The spectrum of frequencies thus produced is 0.122 to 0.131 mc; the spectrum points are separated by 1 kc.

4-275. 1 KC SPECTRUM GENERATOR, TEST DATA.

4-276. Pertinent references and applicable test data for the 1 kc spectrum generator are as follows:

a. Radio Receiver R-1051/URR, Main Frame, Schematic Diagram, Figure 5-1.

b. Spectrum Generator Electronic Subassembly, Servicing Block Diagram, Figure 4-57.

c. Spectrum Generator Electronic Subassemly, Schematic Diagram, Figure 5-10.

d. 1 KC Spectrum Generator, Component and Test-Point Location, Figure 5-98.

e. Required Test Equipment:

(1) RF Signal Generator, CAQI-606A.

(2) Electronic Multimeter, CCVO-91CA.

(3) Oscilloscope, AN/USM-105A.

(4) Frequency Meter, CAQI-524D.

(5) Multimeter, AN/PSM-4.

(6) Translator/Synthesizer Test Set, TS-2133/WRC-1.

f. Refer to paragraph 3-26 in Technical Manual for Repair of AN/WRC-1 and R-1051/URR 2N Modules, NAVSHIPS 95700, for 1 kc spectrum generator adjustment procedures.

4-277. 1.981 MC ERROR MIXER, FUNCTIONAL CIRCUIT DESCRIPTION.

4-278. The 1.981 mc error mixer (figure 4-39) consists of an isolation amplifier (Q7), a mixer (Q10), and a 1.981 mc filter (FL2). These circuits, which form a part of the 1 and 10 KC Synthesizer Electronic Subassembly A2A6A3, mix the output signal from the 1.850 to 1.859 mc oscillator with one of the 1 kc spectrum points to produce the 1.981 mc product signal used in the 7.089 mc mixer. The following paragraph describes the operation of the 1.981 mc error mixer in detail.

4-279. The signal from the 1.850 to 1.859 mc oscillator is coupled through capacitor C30 to the emitter of isolation amplifier Q7. The grounded base configuration of isolation amplifier Q7 provides a high reverse attenuation to the spectrum and mixer products present in mixer Q10. Base bias is provided by voltage divider R29, R27. Resistor R12 and capacitor C13 provide decoupling for isolation amplifier Q7. Capacitor C29 is used to provide ac ground to the base of isolation amplifier Q7. The output of isolation amplifier Q7 is applied to inductor L4, which provides the impedance transformation necessary to drive mixer Q10. Resistor R26 is used to ensure uniformity of the signal developed across inductor L4. The output of inductor L4 is coupled through capacitor C43 to the base of mixer Q10. The 1 kc spectrum is coupled through capacitor C44 to the emitter of mixer Q10. Base bias is provided by voltage divider R44, R42. Resistor R12 and capacitor C13 provide decoupling. The mixing products at the collector of mixer Q10 are applied to crystal filter FL2 where all the products except the sum, 1.981 mc, are attenuated. Resistor R41 and capacitor C9 form the input termination of crystal filter FL2. Capacitor C8 forms a part of the output termination of crystal filter FL2. The output of crystal filter FL2 is applied to the 7.089 mc mixer.

4-280. 1.981 MC ERROR MIXER, TEST DATA.

4-281. Pertinent references and applicable test data for the 1.981 mc error mixer are as follows:

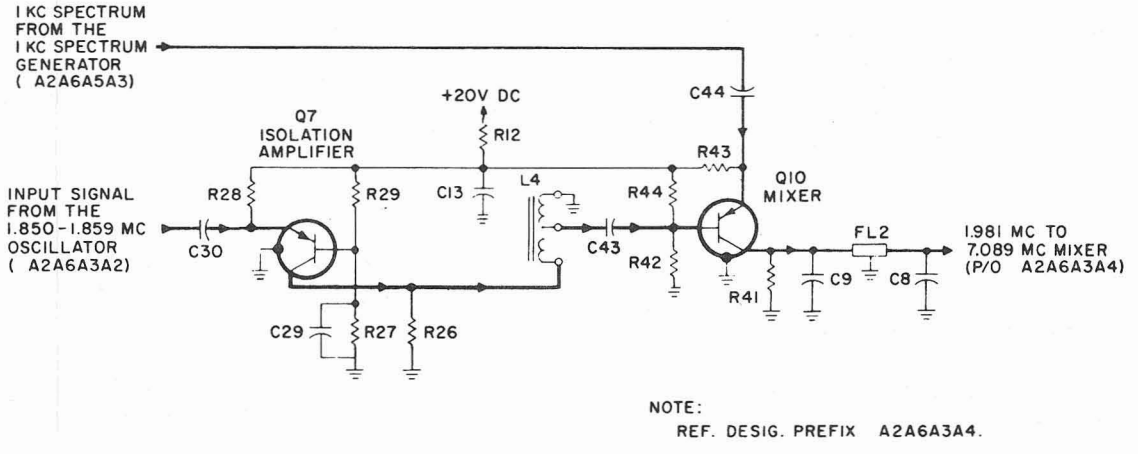

Figure 4-39. 1.981 MC Error Mixer, Simplified Schematic Diagram

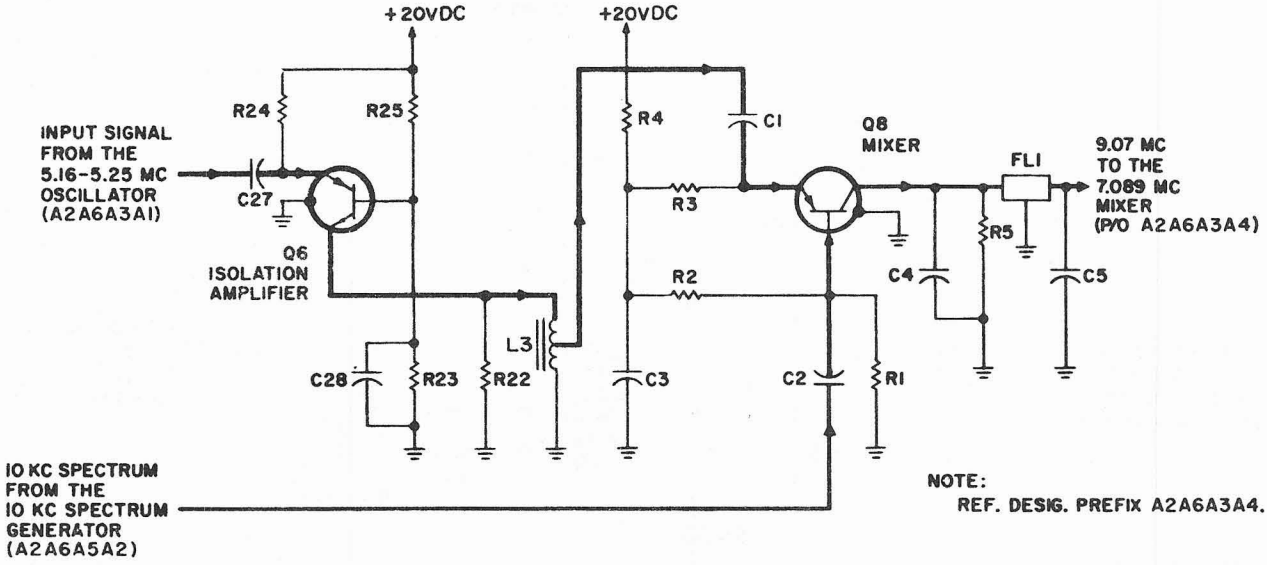

Figure 4-40. 9.07 MC Error Mixer, Simplified Schematic Diagram

a. Radio Receiver R-1051/URR, Main Frame, Schematic Diagram, Figure 5-1.

b. 1 and 10 kc Synthesizer Electronic Subassembly, Servicing Block Diagram, Figure 4-59.

c. 1 and 10 kc Synthesizer Electronic Subassembly, Schematic Diagram, Figure 5-8.

d. 7.089 mc Mixer, Component and Test-Point Location, 5-84.

e. Required Test Equipment:

(1) RF Signal Generator, CAQI-606A.

(2) Electronic Multimeter, CCVO-91CA.

(3) Frequency Meter, CAQI-524D.

(4) Multimeter, AN/PSM-4.

(5) Translator/Synthesizer Test Set, TS-2133/WRC-1.

4-282. 9.07 MC ERROR MIXER, FUNCTIONAL CIRCUIT DESCRIPTION.

4-283. The 9.07 mc error mixer (figure 4-40) consists of an isolation amplifier (Q6), a mixer (Q8), and a 9.07 mc filter (FL1). These circuits, which form a part of the 1 and 10 KC Synthesizer Electronic Subassembly A2A6A3, mix the output signal from the 5.16 to 5.25 mc oscillator with one of the 10 kc spectrum points to produce the 9.07 mc product signal used in the 7.089 mc mixer. This circuit is identical, except for a few component values, to the 1.981 mc error mixer. Refer to paragraph 4-279 for details of circuit operation.

4-284. 9.07 MC ERROR MIXER, TEST DATA.

4-285. Pertinent references and applicable test data for the 9.07 mc error mixer are as follows:

a. Radio Receiver R-1051/URR, Main Frame, Schematic Diagram, Figure 5-1.

b. 1 and 10 KC Synthesizer Electronic Subassembly, Servicing Block Diagram, Figure 4-59.

c. 1 and 10 KC Synthesizer Electronic Subassembly, Schematic Diagram, Figure 5-8.

d. 7.089 mc Mixer, Component and Test-Point Location, Figure 5-84.

e. Required Test Equipment:

(1) RF Signal Generator, CAQI-606A.

(2) Electronic Multimeter, CCVO-91CA.

(3) Frequency Meter, CAQI-524D.

(4) Multimeter, AN/PSM-4.

(5) Translator/Synthesizer Test Set, TS-2133/WRC-1.

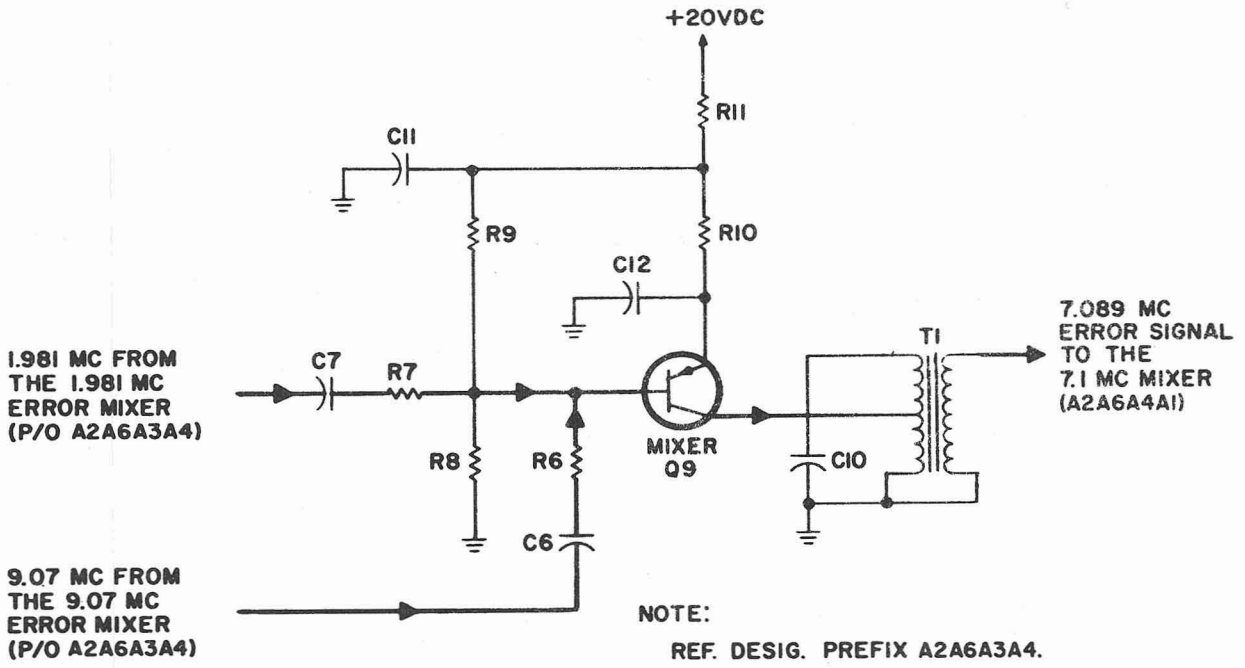

Figure 4-41. 7.089 MC Mixer, Simplified Schematic Diagram

4-286. 7.089 MC MIXER, FUNCTIONAL CIRCUIT DESCRIPTION.

4-287. The 7.089 mc mixer circuit (figure 4-41), which forms a part of 1 and 10 KC Synthesizer Electronic Subassembly A2A6A3, mixes the 1.981 mc signal from the 1.981 mc error mixer with the 9.07 mc signal from the 9.07 mc error mixer. This circuit, which consists of mixer Q9, produces the 7.089 mc error signal used in the 7.1 mc mixer of 500 CPS Synthesizer Electronic Subassembly A2A6A4. The following paragraph describes the operation of the circuit in detail.

4-288. The 1.981 mc signal is coupled through capacitor C7 and isolating resistor R7 to the base of mixer Q9. The 9.07 mc signal is coupled through capacitor C6 and isolating resistor R6 to the base of mixer Q9. Since the outputs of the 1.981 mc error mixer and the 9.07 mc error mixer are combined at the base of mixer Q9, the output termination for the respective filters is located in the 7.089 mc mixer. This termination consists of resistors R6 and R7, capacitors C5, C6, C7, and C8, the input impedance of mixer Q9, and the output impedance of the respective filters. Base bias for mixer Q9 is provided by voltage divider R9, R8. Resistor R11 and capacitor C11 provide decoupling for mixer Q9. The output circuit of mixer Q9 is a tuned circuit consisting of capacitor C10 and transformer T1, and is tuned to 7.089 mc. Therefore, all mixing products except the difference frequency, 7.089 mc, will be attenuated by the output circuit of mixer Q9. The 7.089 mc signal is coupled through transformer T1 to the 7.1 mc mixer circuit in 500 CPS Synthesizer Electronic Subassembly A2A6A4.

4-289. 7.089 MC ERROR MIXER, TEST DATA.

4-290. Pertinent references and applicable test data for the 7.089 mixer are as follows:

a. Radio Receiver R-1051/URR, Main Frame, Schematic Diagram, Figure 5-1.

b. 1 and 10 kc Synthesizer Electronic Subassembly, Servicing Block Diagram, Figure 4-59.

c. 1 and 10 kc Synthesizer Electronic Subassembly, Schematic Diagram, Figure 5-8.

d. 7.089 mc Mixer Component and Test-Point Location, Figure 5-84.

e. Required Test Equipment:

(1) RF Signal Generator, CAQI-606A.

(2) Electronic Multimeter, CCVO-91CA.

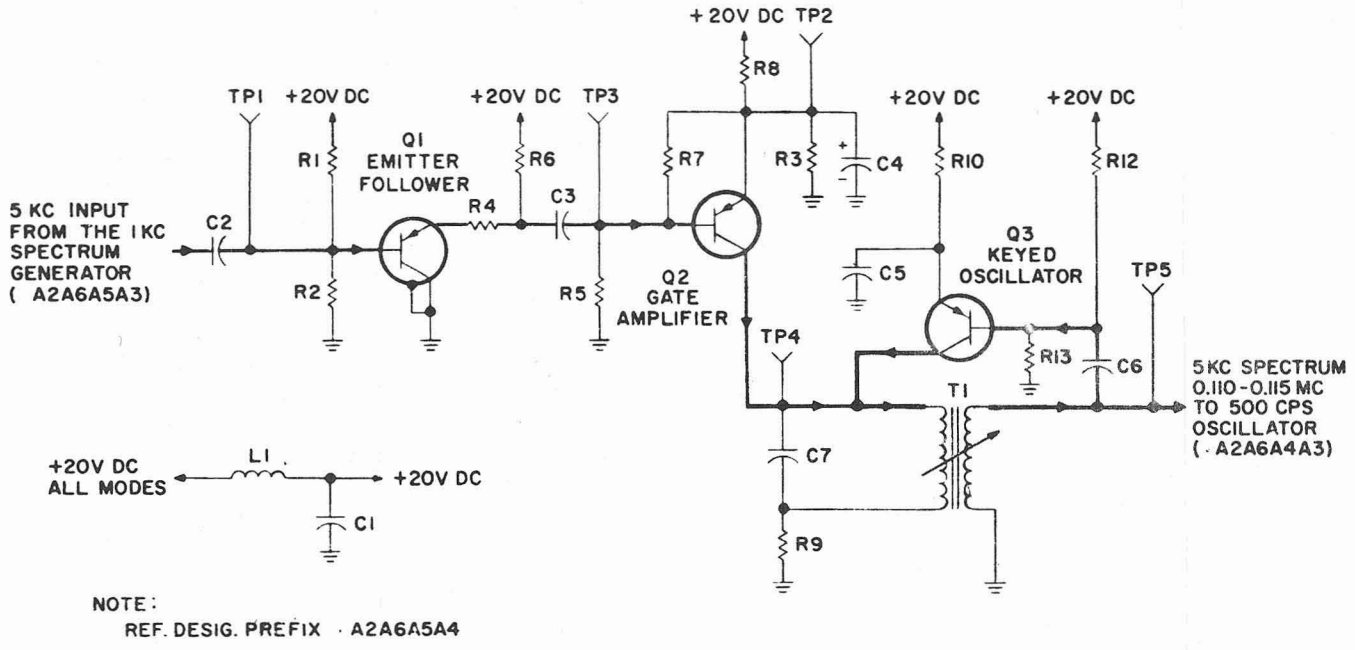

Figure 4-42. 5 KC Spectrum Generator, Simplified Schematic Diagram

(3) Frequency Meter, CAQI-524D.

(4) Multimeter, AN/PSM-4.

(5) Translator/Synthesizer Test Set, TS-2133/WRC-1.

f. Refer to paragraph 3-28 in Technical Manual for Repair of AN/WRC-1 and R-1051/URR 2N Modules, NAVSHIPS 95700, for 7.089 mc error mixer adjustment procedures.

4-291. 5 KC SPECTRUM GENERATOR, FUNCTIONAL CIRCUIT DESCRIPTION.

4-292. The 5 kc spectrum generator (figure 4-42) consists of an emitter follower (Q1), a gate amplifier (Q2), and a keyed oscillator (Q3). These circuits, which form a part of Spectrum Generator Electronic Subassembly A2A6A5, produce a frequency spectrum at 0.110 mc and 0.115 mc. These spectra are supplied to 500 cps oscillator A2A6A4A3 for use in the automatic phase lock loop. The 5 kc spectrum generator is used in all modes of operation. The following paragraph describes in detail the operation of the 5 kc spectrum generator.

4-293. The input to the 5 kc spectrum generator is the 5 kc pulsed output of the 1 kc spectrum generator. This input signal is coupled to the base of emitter follower Q1. Bias voltage for emitter follower Q1 is developed by voltage divider R1, R2 and emitter resistors R4 and R6 from the positive 20 vdc supplied by main frame power supply A2A8. Emitter follower Q1 prevents loading the multivibrator in 1 kc spectrum generator A2A6A5A3, and provides a low impedance source for gate amplifier Q2. The output of emitter follower Q1 is coupled to the base of gate amplifier Q2 by capacitor C3. Gate amplifier Q2 is identical to gate amplifier Q4 in the 100 kc spectrum generator (refer to paragraph 4-234). Gate amplifier Q2 turns keyed oscillator Q3 on and off at a 5 kc repetition rate. Keyed oscillator Q3 is identical to keyed oscillator Q5 in the 100 kc spectrum generator (refer to paragraph 4-235). The output of keyed oscillator Q3 is a sinusoidal burst of frequencies 100 microseconds in duration, repeated at a 5 kc rate. The desired spectra of frequencies thus produced are 0.110 mc and 0.115 mc. The output of keyed oscillator Q3 is applied to 500 CPS Synthesizer Electronic Subassembly A2A6A4.

4-294. 5 KC SPECTRUM GENERATOR, TEST DATA.

4-295. Pertinent references and applicable test data for the 5 kc spectrum generator are as follows:

a. Radio Receiver R-1051/URR, Main Frame, Schematic Diagram, Figure 5-1.

b. Spectrum Generator Electronic Subassembly, Servicing Block Diagram, Figure 4-57.

c. Spectrum Generator Electronic Subassembly, Schematic Diagram, Figure 5-10.

d. 5 KC Spectrum Generator, Component and Test-Point Location, Figure 5-99.

e. Required Test Equipment:

(1) RF Signal Generator, CAQI-606A.

(2) Electronic Multimeter, CCV0-91CA.

(3) Oscilloscope, AN/USM-105A.

(4) Frequency Meter, CAQI-524D.

(5) Multimeter, AN/PSM-4.

(6) Translator/Synthesizer Test Set, TS-2133/WRC-1.

f. Refer to paragraph 3-26 in Technical Manual for Repair of AN/WRC-1 and R-1051/URR 2N Modules, NAVSHIPS 95700, for 5 kc spectrum generator adjustment procedures.

4-296. 500 CPS OSCILLATOR, FUNCTIONAL CIRCUIT DESCRIPTION.

4-297. The 500 cps oscillator (figure 4-43) consists of a Clapp oscillator (Q1, Q2), three emitter followers (Q3, Q5 and Q6), two amplifiers (Q4 and Q7), and a phase detector (CR8, CR9 and T1). The 500 cps oscillator, which forms a part of 500 CPS Synthesizer Electronic Subassembly A2A6A4, produces either a locked 110 or 115 kc signal, or an unlocked 108 to 122 kc signal for driving divide-by-ten multivibrators A2A6A4A2. These circuits are used in all modes of operation. The following paragraphs describe the operation of 500 cps oscillator in detail.

4-298. The positive 20 vdc supply voltage for all circuits of the 500 cps oscillator circuits is produced by main frame Power Supply A2A8 and is applied directly to these circuits. Zener diode CR1 regulates this 20 vdc to 15 vdc, for use in the circuit by drawing enough current, in addition to the load current, to maintain a 5 vdc drop across resistor R1. Capacitors C2 and C3 filter the regulated 15 vdc output of Zener diode CR1.

4-299. Oscillator Q1, Q2 is a Clapp oscillator, the tank circuit of which consists of capacitors C4, C5, C7, C8, C9, C10, C11; inductor L4; and voltage variable capacitors CR2, CR3, and CR4. Voltage variable capacitors (VVC) CR2 and CR3 are the main tuning elements of oscillator Q1, Q2. Capacitor C10 is selected to adjust the initial frequency of oscillator Q1, Q2. Required pulling range for the phase lock loop is provided by VVC CR4. Capacitor C9 compensates for the non-linear tuning characteristics of VVC CR4. Capacitor C11 has a negative temperature coefficient to compensate for temperature changes in oscillator Q1, Q2. The parallel and series combination of these capacitances results in a single variable capacity, which is designated C'. For the purpose of ready recognition, the simplified ac circuit equivalent to oscillator Q1, Q2 can now be drawn as illustrated in figure 4-44. It can now be readily seen that capacitors C4, C5, C7, C8, C' and inductor L4 compose the parallel-resonant tank circuit for oscillator Q1, Q2.

4-300. The regulated 15 vdc supplied by Zener diode CR1 is filtered by A2A6A4A1L1, A2A6A4A1C1 and applied to voltage divider A2A11R4, A2A11R5, A2A11R3 located on the main frame through contacts 3 or 4 and 5 of switch A2S6. The voltage developed across the voltage divider is tapped in one of two places, depending on the setting of CPS switch A2S6. When the CPS switch is in the 000 position, the voltage applied through contacts 2 and 5, filter L5, C12, and isolating resistor R12 sets the capacity of VVC CR2 and VVC CR3 to such value as to cause the output of oscillator Q1, Q2 to be approximately 110 kc if the phase lock loop is open, and exactly 110 kc if the phase lock loop is closed. When the CPS switch is in the 500 position, the voltage applied through contacts 3 and 5, filter L5, C12, and isolating resistor R12 sets the capacity of VVC CR2 and VVC CR3 to such value as to cause the output of oscillator Q1, Q2 to be 115 kc. Filter L5, C12 removes any spurious ac signals present on the 15 vdc line. Resistor A2A11R3 establishes the lower reference point for the 000 and 500 positions of the CPS switch. When the CPS switch is in the VERNIER position, the voltage applied to VVC CR2 and VVC CR3 can be adjusted by VERNIER control A2R7, allowing the output of oscillator Q1, Q2 to be varied from 108 to 122 kc. Resistor A2A11R1 establishes the lower reference point for VERNIER control A2R7.

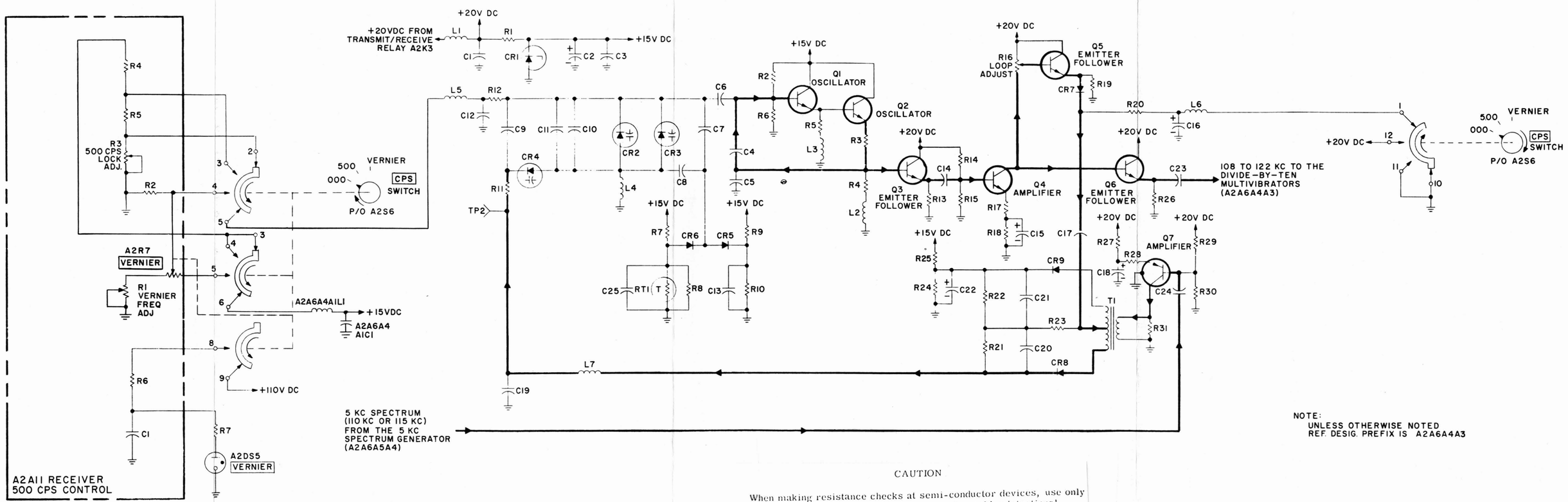

CAUTION

When making resistance checks at semi-conductor devices, use only the higher scales of the multimeter so as to avoid unintentional damage to the semi-conductor device due to the meters internal voltage.

Figure 4-43. 500 CPS Oscillator, Simplified Schematic Diagram

The 15 vdc applied through contacts 6 and 5 of switch A2S6 establishes the upper reference point (122 kc) for VERNIER control A2R7. Resistor A2A11R2 isolates the vernier network from the 000 - 500 network. When the CPS switch is in the VERNIER position, VERNIER indicator A2DS5 flashes. Capacitor A2A11C1 charges through resistor A2A11R6 until the charge causes A2DS5 to fire. When A2DS5 fires, capacitor A2A11C1 discharges through A2A11R7 until A2DS5 is extinguished. Capacitor A2A11C1 will then charge again, and the process is repeated until the CPS switch is placed in some other position.

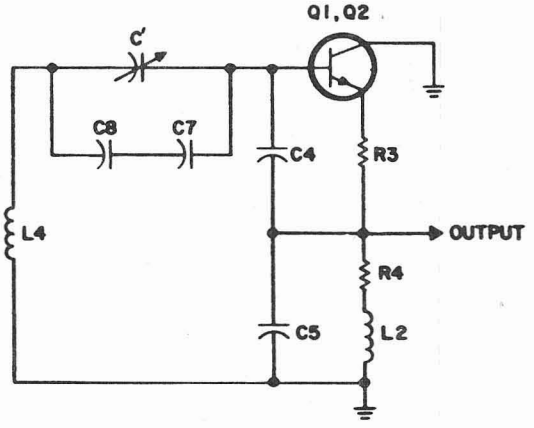

Figure 4-44. 500 CPS Oscillator, AC Equivalent Circuit, Schematic Diagram

4-301. When operating voltage is applied to oscillator Q1, Q2, the oscillator will produce an approximate output corresponding to the setting of the CPS switch. Resistors R2 and R6 compose the voltage divider that develops the base-bias for transistor Q1. Resistors R5, R3 and R4 are the emitter resistors for transistors Q1 and Q2. Inductors L2 and L3 provide a ground path for the dc voltages and a high impedance for the ac voltages. Capacitor C6 is a dc blocking capacitor. The output of oscillator Q1, Q2 is limited by diodes CR5 and CR6. The negative-going limit for the signal is established by the anode bias, which is developed by voltage divider R7, R8, RT1, minus the forward drop across diode CR6. The positive-going limit for the signal is established by the cathode bias, which is developed by voltage divider R9, R10, plus the forward drop across diode CR5. Therefore, the peak-to-peak amplitude of the signal is limited by the two established dc reference levels. The bias on diodes CR5 and CR6 is nearly equal at room temperature. As the temperature of the circuit varies, the forward drop of diodes CR5 and CR6 varies. Without compensation, this would result in variations in the output signal amplitude. Thermistor RT1 varies the anode bias of diode CR6 according to the temperature changes. Therefore, the negative-going limit for the signal is shifted so that the difference between the two dc references is constant. This insures that the amplitude of the signal does not vary with changes in temperature. Capacitors C13 and C25 are rf bypass capacitors.

4-302. The output of oscillator Q1, Q2 is applied directly to the base of emitter follower Q3, which in turn develops the signal across resistor R13. Emitter follower Q3 provides isolation for oscillator Q1, Q2, preventing succeeding stages from adversely loading the oscillator. The output of emitter follower Q3 is coupled to the base of amplifier Q4 by capacitor C14. Bias voltage for amplifier Q4 is developed by voltage divider R14, R15. A small amount of degeneration is developed by unbypassed emitter resistor R17 in order to increase the stability of amplifier Q4. The amplified output of amplifier Q4 is applied directly to the base of emitter follower Q6, which develops the signal across resistor R26. Emitter follower Q6 provides a low impedance source for the divide-by-ten multivibrators. The output of emitter follower Q6 is coupled to the divide-by-ten multivibrators by capacitor C23.

4-303. The output of amplifier Q4 is also applied to the base of emitter follower Q5. Potentiometer R16 establishes the signal level at the base of emitter follower Q5 and also serves as a voltage divider for developing the base-bias, thereby setting the gain of the phase lock loop. Emitter follower Q5 provides a low impedance source for phase detector circuit CR8, CR9, and T1. When the CPS switch is in the 000 or 500 position, a ground potential is applied through filter L6, C16 to resistor R20. Therefore, diode CR7 is forward-biased, allowing the signals developed across resistor R19, by emitter follower Q5, to pass. This signal is coupled to the center tapped secondary of transformer T1 by capacitor C17. When the CPS switch is in the VERNIER position, 20 vdc is applied through filter L6, C16 and resistor R20 to the cathode of diode CR7. The back-biased diode then blocks the oscillator output.

4-304. The 5 kc spectrum output of the 5 kc spectrum generator is coupled to the base of amplifier Q7 by capacitor C24. Operating voltage for amplifier Q7 is developed by voltage divider R29, R30 and emitter resistor R27, R28 from the positive 20 vdc supply. A small amount of degeneration is developed by resistor R28 and is used to increase the stability of amplifier Q7. The output of amplifier Q7 is developed across the primary of transformer T1. Resistor R31 ensures that a uniform signal is developed across the primary of transformer T1.

4-305. The phase detector circuit compares the output of oscillator Q1, Q2 with the 5 kc spectrum reference frequency when the CPS switch is in the 000 or 500 position. If a difference exists between the two, the output of the phase detector circuit will be an ac function that varies about the circuit dc reference. This ac function will vary the capacity of VVC CR4, and thus will sweep the oscillator. As the oscillator output sweeps through the reference frequency, the output frequency of the phase detector will decrease with each sweep and eventually go to zero. The output of the phase detector will then be a dc level, which locks the output of the oscillator to the frequency standard. Whenever the oscillator begins to drift, the phase difference will be detected by the phase detector, which will shift the dc potential applied to VVC CR4 accordingly. Thus the phase detector holds the oscillator on frequency.

4-306. The phase detector circuit is referenced at a dc potential, which is developed by voltage divider R25, R24. This dc reference, the voltage across resistor R24, is applied to the cathode of diode CR9. Since there is no other dc path in the phase detector circuit, this level references the output, at the cathode of diode CR8, to the same dc potential. Capacitor C22 serves as a bypass for resistor R24. The output of oscillator Q1, Q2 is developed across resistor R23. The 5 kc spectrum output of amplifier Q7 is induced into the secondary of transformer T1. The secondary of transformer T1 provides a balanced output from amplifier Q7, and also forms a part of the phase detector circuit. Each half of the balanced output is composed of a diode (CR8 or CR9), a resistor (R21 or R22), and capacitor (C21 or C20) with a common path through resistor R23. The center-tapped secondary of transformer T1 is the common path for all signals. Since the output of transformer T1 is balanced, the net dc current through resistor R23 is zero, and, in the absence of an oscillator signal, the net voltage from the cathode of diode CR8 to the cathode of diode CR9 is also zero. With an oscillator signal present, this net voltage will remain about zero, unless the oscillator frequency is nearly coincident with the 5 kc spectrum reference frequency. When the oscillator and 5 kc spectrum frequencies are nearly coincident, the net output voltage across resistors R21 and R22 will no longer be zero. This net voltage will now be a function that varies with time and that has a frequency equal to the difference between the oscillator frequency and the 5 kc spectrum frequency. In order for oscillator Q1, Q2 to be locked, the difference between the oscillator frequency and the 5 kc spectrum reference frequency must be zero.

4-307. Assume that the output of the oscillator is 110.4 kc and that the desired oscillator output is 110 kc. The 5 kc spectrum contains the two spectrum points 110 kc and 115 kc. The 110.4 kc and 115 kc signals are not coincident enough to materially change the net voltage between diodes CR8 and CR9. However, the 110.4 kc signal is in close coincidence with the 110 kc spectrum point. This causes a 400 cps ac output from the phase detector circuit. The ac output of the phase detector varies the capacity of VVC CR4 by varying the applied voltage above and below the dc reference, and thus sweeps the oscillator at 400 cps. Since the loop is closed, the phase detector output, or sweep frequency, will decrease with time as the oscillator output frequency decreases as a result of being swept. After this sweep frequency has been decreased to a frequency within the pull-in range of the oscillator, the oscillator will pull-in and lock at the desired 110 kc. At this time, the output from phase detector CR8 and CR9 is the dc reference level. If the phase of the oscillator begins to drift, the phase difference will be detected by the phase detector circuit, and the dc output will be shifted to correct the oscillator frequency. The network of inductor L7 and capacitor C19 filters the output of the phase detector circuit.

4-308. A vector diagram of the phase detector circuit will clarify its operation. Consider, first, the series circuit composed of R23, C21, and C22, across which the output of oscillator Q1, Q2 is developed (figure 4-45a). At frequencies near 110 kc, the reactance of capacitor C21 is approximately 145 ohms, and

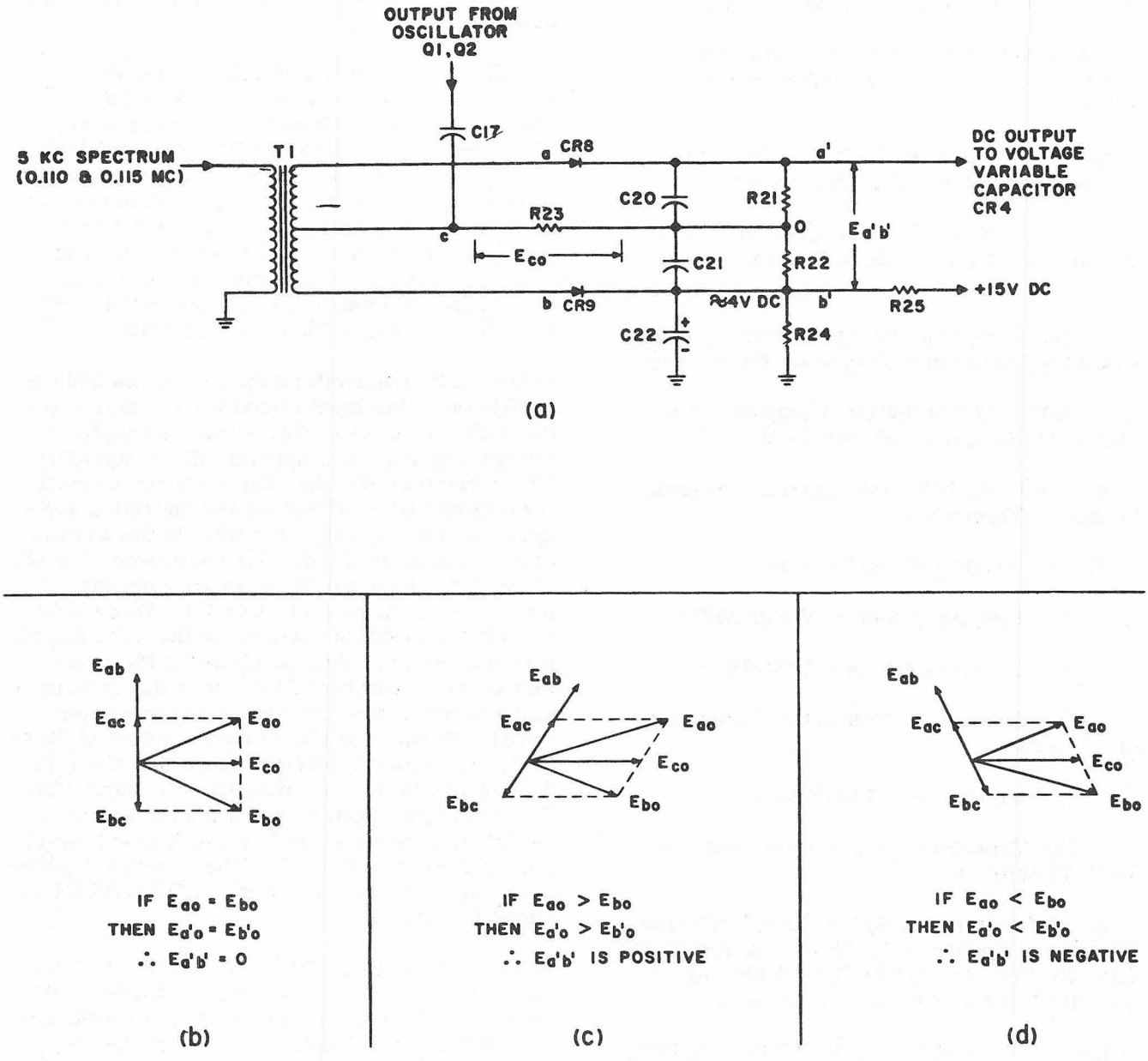

Figure 4-45. Phase Detector, Vector Diagram

the reactance of capacitor C22 is approximately 0.65 ohms. Therefore, nearly all the signal from oscillator Q1, Q2 is developed across resistor R23. Next, consider the situation when the oscillator frequency equals the 110 kc spectrum point. The potentials E_{ao} and E_{bo} then have amplitudes and phases somewhat as illustrated in figure 4-45b. Since $E_{ao} = E_{bo}$, then $E_{a'o} = E_{b'o}$; therefore $E_{a'b'} = 0$. When the phase difference between the oscillator frequency and the 110 kc spectrum point is positive (oscillator output greater than the spectrum point), E_{ao} and E_{bo} will have amplitude and phases as illustrated in figure 4-45c. Since $E_{ao} > E_{bo}$, then $E_{a'o} > E_{b'o}$; therefore, $E_{a'b'}$ is positive. When the phase difference between the oscillator and the 110 kc spectrum point, is negative (oscillator output less than the spectrum point, E_{ao} and E_{bo} will have amplitudes and phases as illustrated in figure 4-45d. Since $E_{ao} < E_{bo}$, then $E_{a'o} < E_{b'o}$; $E_{a'b'}$ is negative. The preceding discussion also holds true if the desired output of the oscillator is 115 kc.

4-309. 500 KC OSCILLATOR, TEST DATA.

4-310. Pertinent references and applicable test data for the 500 cps oscillator are as follows:

a. Radio Receiver R-1051/URR, Main Frame, Schematic Diagram, Figure 5-1.

b. 500 CPS Synthesizer Electronic Subassembly, Servicing Block Diagram, Figure 4-58.

c. 500 CPS Synthesizer Electronic Subassembly, Schematic Diagram, Figure 5-9.

d. 500 CPS Oscillator, Component and Test-point Location, Figure 5-92.

e. Receiver 500 CPS Control, Components Location, Figure 5-19.

f. Required Test Equipment:

(1) Frequency Meter, CAQI-524D.

(2) Oscilloscope, AN/USM-105A.

(3) Heterodyne Voltmeter, Bruel and Kjaer, 2005.

(4) Multimeter, AN/PSM-4.

(5) Translator/Synthesizer Test Set, TS-2133/WRC-1.

g. Refer to paragraph 3-30 in Technical Manual for Repair of AN/WRC-1 and R-1051/URR 2N Modules, NAVSHIPS 95700, for 500 cps oscillator adjustment procedures.

4-311. DIVIDE-BY-TEN MULTIVIBRATORS, FUNCTIONAL CIRCUIT DESCRIPTION.

4-312. The divide-by-ten multivibrators circuit (figure 4-46) consists of a shaping amplifier (Q9), a divide-by-five circuit (Q1, Q2, Q3, Q4, Q5, Q6), and a divide-by-two circuit (Q7, Q8). These circuits, which form a part of 500 CPS Synthesizer Electronic Subassembly A2A6A4, divide the locked 110 kc or 115 kc, or the unlocked 108 to 122 kc output from 500 cps oscillator A2A6A4A3 by ten. The result of the division is the locked 11 kc or 11.5 kc, or the unlocked 10.8 to 12.2 kc signal required for mixing in 7.1 mc mixer A2A6A4A1. These circuits are used in all modes of operation. The following paragraphs describe the operation of the divide-by-ten multivibrators in detail.

4-313. The operation voltage for the divide-by-ten multivibrators is the positive 10 vdc output from Zener diode CR1. Zener diode CR1 regulates the positive 20 vdc output from main frame power supply A2A8 to 10 vdc by drawing enough current, in addition to the current drawn by the load, to maintain a 10 vdc drop across resistor R1. Capacitor C1 and inductor L1 filter the 20 vdc input to Zener diode CR1, and capacitor C2 filters the positive 10 vdc output of Zener diode CR1.

4-314. The sinusoidal output from the 500 cps oscillator is the input signal for the divide-by-ten multivibrators. This signal is coupled to the base of shaping amplifier Q9 by capacitor C3. Resistors R3, R4, and R6 form a resistive network which develops the operating voltages for shaping amplifier Q9. In the absence of a signal input, diode CR2 holds amplifier Q9 at cut-off. As a result, a small input signal overdrives shaping amplifier Q9. Diode CR2 clamps the positive portions of the input signal. Resistor R2 provides isolation for the input signal, and capacitor C4 reduces the transistor storage time, thus increasing the switching speed. Because of the clamping action of diode CR2, the negative portions of the input signal will drive shaper amplifier Q9 into saturation. The resulting negative-going pulses are inverted by shaping amplifier Q9, and are developed across resistor R5. These positive pulses are coupled to steering diodes CR3 and CR4 by capacitor C6.

4-315. Transistors Q1, Q2, Q3, Q4, Q5 and Q6 compose three conventional bistable multivibrators, which are connected in a configuration employing a feedback loop to divide the input signal by five. Bistable multivibrator Q7, Q8 divides the output from this circuit by two. Refer to figure 4-47 and table 4-1 during the following discussion.

4-316. Assume that transistors Q1 through Q8 are in the condition shown by the start condition line of table 4-1. The first input pulse from shaping amplifier Q9 is differentiated by capacitor C6 and the input impedance of multivibrator Q1, Q2. The resulting positive trigger pulse switches transistor Q2 to cutoff and transistor Q1 to saturation, producing a negative pulse at the collector of transistor Q2. This pulse is differentiated by capacitor C10 and the input impedance of multivibrator Q3,

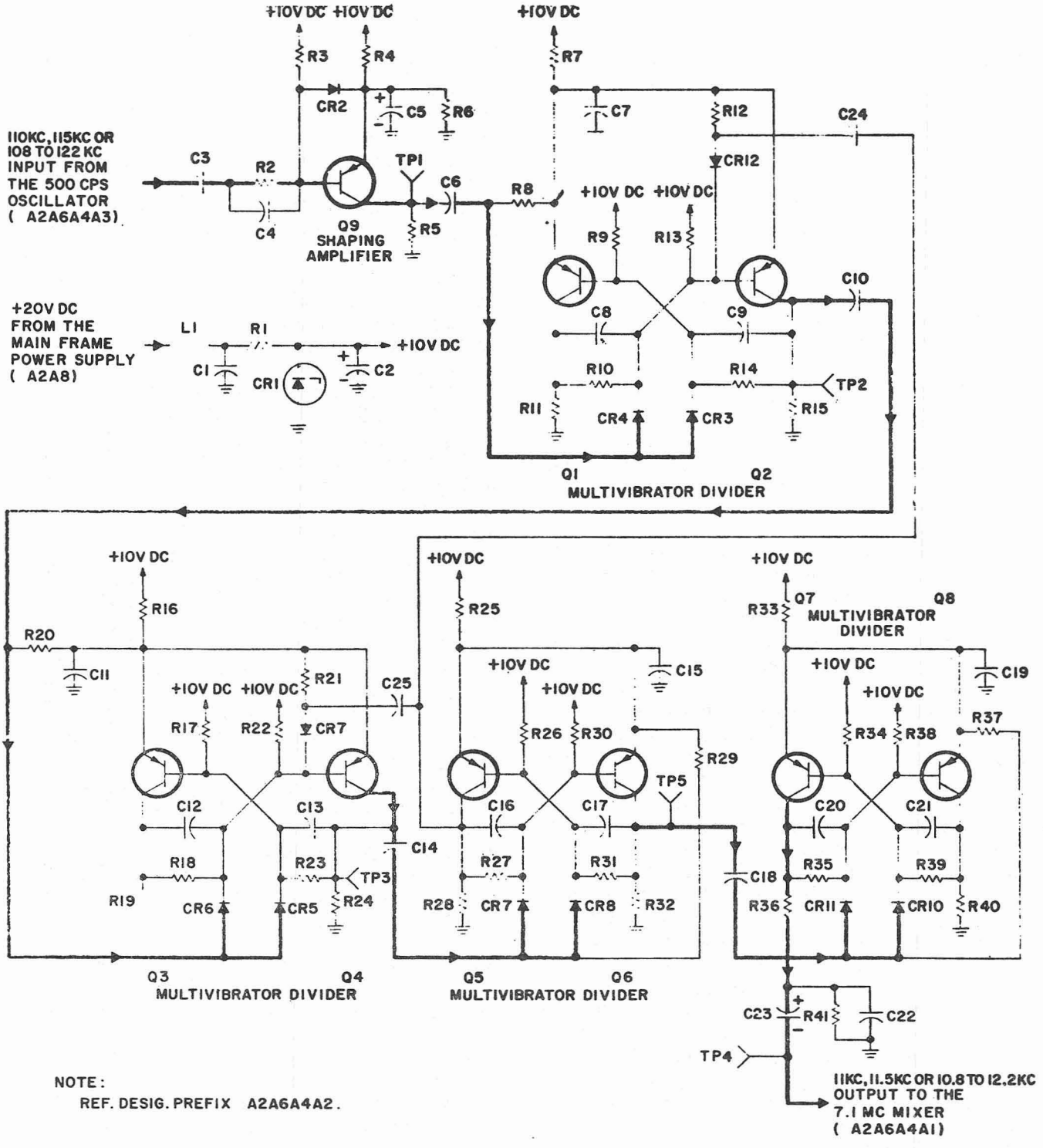

Figure 4-46. Divide-By-Ten Multivibrators, Simplified Schematic Diagram

Q4. This back-biases steering diodes CR5 and CR6, preventing an input to multivibrator Q3, Q4. Therefore, the remaining transistors of the divide-by-ten multivibrators circuit do not change condition (pulse 1 line of table 4-1). The second input pulse to multivibrator Q1, Q2 is differentiated, and the resulting positive trigger pulse switches transistor Q1 to cutoff

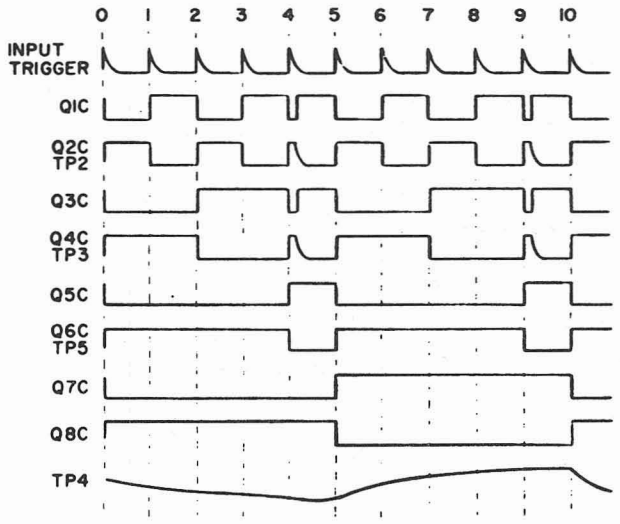

Figure 4-47. Divide-By-Ten Multivibrators, Timing Diagram

and transistor Q2 back into saturation, producing a postive pulse on the collector of transistor Q2. This pulse is differentiated, producing a positive trigger pulse, which switches transistor Q4 to cutoff and transistor Q3 to saturation. The negative pulse on the collector of transistor Q4 is differentiated by capacitor C14 and the input impedance of multivibrator Q5, Q6. This back-biases steering diodes CR8 and CR9. Therefore, the remaining transistors of the divide-by-ten multivibrators do not change condition (pulse 2 line of table 4-1). The third input pulse to multivibrator Q1, Q2 switches transistor Q2 to cutoff and transistor Q1 to saturation, producing another negative pulse on the collector of transistor Q2. Therefore, there is no further change in the remaining transistors of the divide-by-ten multivibrators (pulse 3 line of table 4-1). The fourth input pulse to multivibrator Q1, Q2 switches transistor Q1 to cutoff and transistor Q2 to saturation. The positive pulse on the collector of transistor Q2 is differentiated, and the resulting positive trigger pulse switches transistor Q3 to cutoff and transistor Q4 to saturation. The positive pulse on the collector of transistor Q4 is differentiated, and the resulting positive trigger pulse switches transistor Q6 to cutoff and transistor Q5 to saturation. The negative pulse on the collector of transistor Q6 is differentiated by capacitor C18 and the input impedance of multivibrator Q7, Q8. This back-biases steering diodes CR10 and CR11. Therefore, transistors Q7 and Q8 do not change condition (pulse 4 line of table 4-1). As noted above, when the fourth input pulse is applied to the multivibrator Q1, Q2, transistor Q5 is switched to saturation. The positive pulse on the collector of transistor Q5 is differentiated by capacitor C25 and the input impedance of multivibrator Q3, Q4. The resulting positive trigger pulse is applied through diode CR7 to the base of transistor Q4, switching transistor Q4 to cutoff and transistor Q3 to saturation. The positive going pulse on the collector of transistor Q5 is also differentiated by capacitor C24 and the input impedance of multivibrator Q1, Q2. The resulting positive trigger pulse is applied through diode CR12 to the base of transistor Q2, switching transistor Q2 to cutoff and transistor Q1 to saturation. Transistors Q1 through Q8 are now in the conditions shown in the feedback line of table 4-1. The fifth pulse applied to multivibrator Q1, Q2, causes changes in all four of the multivibrators as shown in the pulse 5 line of table 4-1. As shown in table 4-1, transistors Q1 through Q6 are now in the same condition they were in prior to the application of the first input pulse. Thus, the input signal is divided by five by transistors Q1 through Q6. The sixth, seventh, eighth, and ninth input pulses to multivibrator Q1, Q2 cause the same changes in circuit conditions for transistors Q1 through Q6 as previously explained (pulse 6, 7, 8, 9, and feedback lines of table 4-1). The tenth input pulse to multivibrator Q1, Q2, like the fifth input pulse, switches transistors Q1 through Q6 back to the starting position. The positive pulse on the collector of transistor Q6 is differentiated; the resulting positive trigger pulse switches transistor Q7 to cutoff and transistor Q8 to saturation. Therefore, for every ten input pulses to multivibrator Q1, Q2; multivibrator Q7, Q8 produces one complete output cycle.

4-317. Resistors R36 and R41 and capacitor C22 serve as the collector load and also form an integrating network to integrate the square wave output at the collector of transistor Q7. The resulting sawtooth output of multivibrator Q7, Q8 is coupled to the 7.1 mc mixer by capacitor C23. Resistor R41 provides a d-c conduction path to ground for transistor Q7.

4-318. DIVIDE-BY-TEN MULTIVIBRATORS, TEST DATA.

4-319. Pertinent references and applicable test data for the divide-by-ten multivibrators are as follows:

a. Radio Receiver R-1051/URR, Main Frame, Schematic Diagram, Figure 5-1.

TABLE 4-1. DIVIDE-BY-TEN MULTIVIBRATORS, TIMING CHART

PULSE NUMBER	Q1	Q2	Q3	Q4	Q5	Q6	Q7	Q8
START CONDITION	OFF	ON	OFF	ON	OFF	ON	OFF	ON
1	ON	OFF	OFF	ON	OFF	ON	OFF	ON
2	OFF	ON	ON	OFF	OFF	ON	OFF	ON
3	ON	OFF	ON	OFF	OFF	ON	OFF	ON
4	OFF	ON	OFF	ON	ON	OFF	OFF	ON
FEEDBACK	ON	OFF	ON	OFF	ON	OFF	OFF	ON
5	OFF	ON	OFF	ON	OFF	ON	ON	OFF
6	ON	OFF	OFF	ON	OFF	ON	ON	OFF
7	OFF	ON	ON	OFF	OFF	ON	ON	OFF
8	ON	OFF	ON	OFF	OFF	ON	ON	OFF
9	OFF	ON	OFF	ON	ON	OFF	ON	OFF
FEEDBACK	ON	OFF	ON	OFF	ON	OFF	ON	OFF
10	OFF	ON	OFF	ON	OFF	ON	OFF	ON

ON - SATURATION

OFF - CUTOFF

b. 500 CPS Synthesizer Electronic Subassembly, Servicing Block Diagram, Figure 4-58.

c. 500 CPS Synthesizer Electronic Subassembly, Schematic Diagram, Figure 5-9.

d. Divide-By-Ten Multivibrators, Component and Test-Point Location, Figure 5-94.

e. Required Test Equipment:

(1) RF Signal Generator, CAQI-606A.

(2) Electronic Multimeter, CCVO-91CA.

(3) Frequency Meter, CAQI-524D.

(4) Multimeter, AN/PSM-4.

(5) Translator/Synthesizer Test Set TS-2133/WRC-1.

4-320. 7.1MC MIXER, FUNCTIONAL CIRCUIT DESCRIPTION.

4-321. The 7.1 mixer (figure 4-48) consists of two amplifiers (Q3 and Q5), a mixer (Q1), two emitter followers (Q2 and Q4), and a 7.1 mc crystal filter (FL1). These circuits, which form a part of 500 CPS Synthesizer Electronic Subassembly A2A6A4, mix the output from divide-by-ten multivibrators A2A6A4A2 with the 7.089 mc output from 7.089 mc mixer A2A6A3A4 to produce a nominal 7.1 mc output. The output level is suitable for use in 17.847/27.847 mc mixer A2A6A2A3. These circuits are used in all modes of operation. The following paragraphs describe the operation of the 7.1 mc mixer in detail.

4-322. The output from the divide-by-ten multivibrators is coupled to the base of amplifier Q5 by capacitor C20. Operating voltage

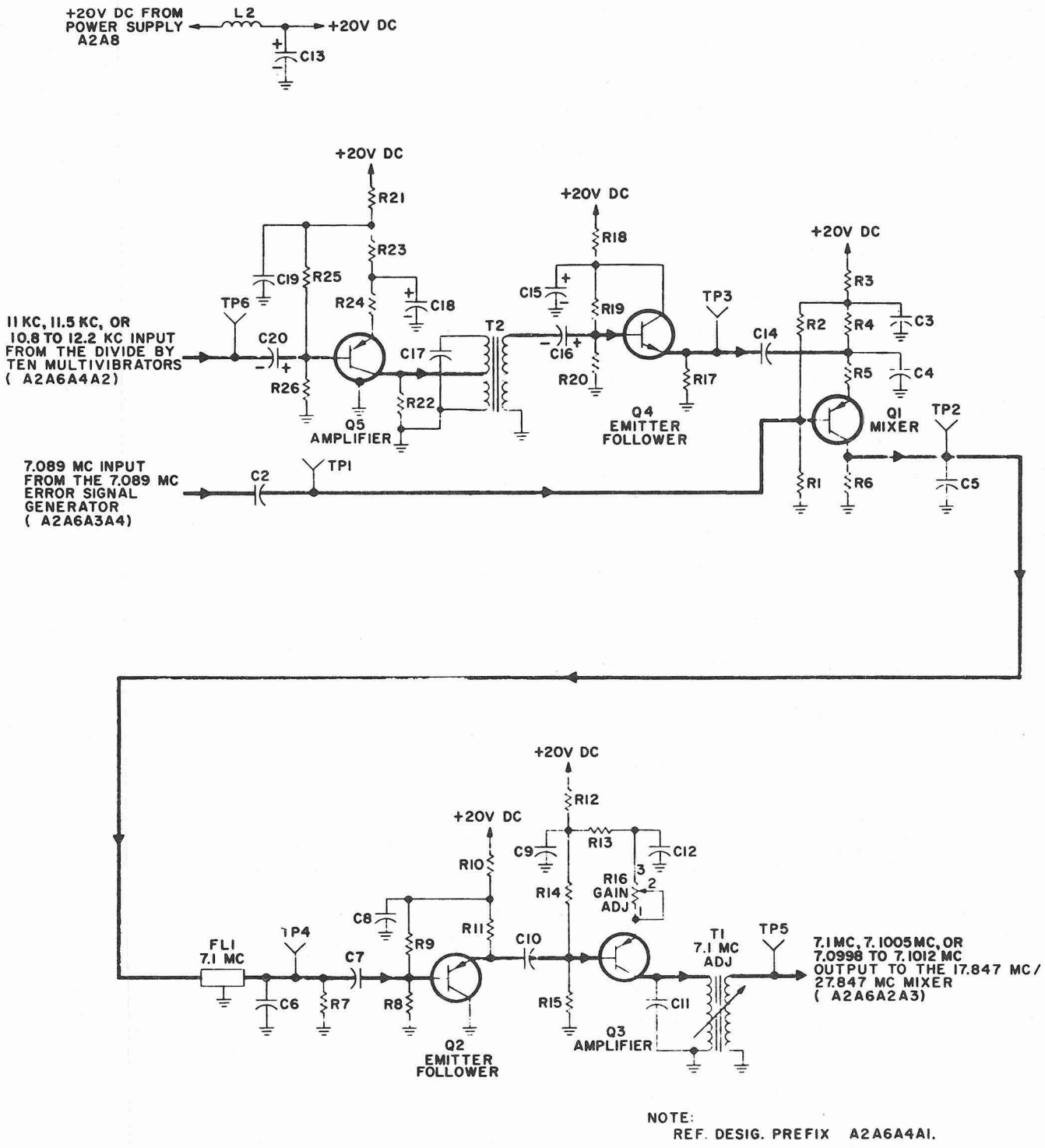

Figure 4-48. 7.1 MC Mixer, Simplified Schematic Diagram

for amplifier Q5 is developed by voltage divider R25, R26 and emitter resistors R23 and R24 from the positive 20 vdc supply line. Capacitor C19 and resistor R21 provide decoupling to prevent interaction with the other circuits connected to the positive 20 vdc supply line. Capacitor C18 is the emitter bypass capacitor of amplifier Q5. Unbypassed emitter resistor R24 provides degeneration to increase the stability of amplifier Q5. The amplified output signals from amplifier Q5 are developed across the fixed tuned circuit consisting of

capacitor C17 and the primary of transformer T2. Resistor R22 increases the bandwidth of transformer T2.

4-323. The sinusoidal output of amplifier Q5 is coupled to the base of emitter follower Q4 by capacitor C16. Operating voltage for emitter follower Q4 is developed by voltage divider R19, R20. Resistor R18 and capacitor C15 provide decoupling to prevent interaction with the other circuits connected to the positive 20 vdc supply line. Emitter follower Q4 provides a low impedance source for mixer Q1. The output of emitter follower Q4 is developed across resistor R17, and is coupled to the emitter of mixer Q1 by capacitor C14.

4-324. Operating voltage for mixer Q1 is developed by emitter resistor R4 and voltage divider R1, R2 from the positive 20 vdc supply line. Resistor R3 and capacitor C3 provide decoupling to prevent interaction with the other circuits connected to the positive 20 vdc supply line. Capacitor C4 is the emitter bypass capacitor. Because of the large difference in frequency between the two inputs, resistor R5 is used to develop a small amount of degeneration to increase the stability of mixer Q1. The 7.089 mc output from 7.089 mixer A2A6A3A4 is coupled to the base of mixer Q1 by capacitor C2. Transistor Q1 mixes the 10.8 to 12.2 kc signal with the 7.089 mc signal. The output signals are developed across resistor R6 and are applied to filter FL1. Filter FL1 is very selective, allowing only the nominal 7.1 mc signal to pass. Capacitor C5 and resistor R6, and capacitor C6 and resistor R7 form the input and output terminations, respectively, for crystal filter FL1. The output of filter FL1 is coupled to the base of emitter follower Q2 by capacitor C7.

4-325. Operating voltage for emitter follower Q2 is developed by voltage divider R8, R9 and emitter resistor R11 from the positive 20 vdc supply line. Resistor R10 and capacitor C8 provide decoupling to prevent interaction with the other circuits connected to the positive 20 vdc supply line. Emitter follower Q2 isolates filter FL1 to prevent it from being adversely loaded by amplifier Q3. The output from emitter follower Q2 is developed across resistor R11 and is coupled to the base of amplifier Q3 by capacitor C10.

4-326. Operating voltage for amplifier Q3 is developed by voltage divider R14, R15 and emitter resistor R13. Resistor R12 and capacitor C9 provide decoupling to prevent interaction with the other circuits connected to the positive 20 vdc supply line. Capacitor C12 is the emitter bypass capacitor. The amount of gain provided by amplifier Q3 is controlled by adjusting the amount of degeneration developed by potentiometer R16. The output of amplifier Q3 is developed across the tuned circuit consisting of capacitor C11 and the primary of transformer T1, and is applied to 17.847/27.847 mc mixer A2A6A2A3.

4-327. 7.1 MC MIXER, TEST DATA.

4-328. Pertinent references and applicable test data for the 7.1 mc mixer are as follows:

a. Radio Receiver R-1051/URR, Main Frame, Schematic Diagram, Figure 5-1.

(1) 500 CPS Synthesizer Electronic Subassembly, Servicing Block Diagram, Figure 4-58.

(2) 500 CPS Synthesizer Electronic Subassembly, Schematic Diagram, Figure 5-9.

b. 7.1 MC Mixer, Component and Test-Point Location, Figure 5-90.

c. Required Test Equipment:

(1) RF Signal General, CAQI-606A.

(2) Electronic Multimeter CCVO-91CA.

(3) Frequency Meter CAQI-524D.

(4) Multimeter, AN/PSM-4.

(5) Translator/Synthesizer Test Set, TS-2133/WRC-1.

d. Refer to paragraph 3-30 in Technical Manual for Repair of AN/WRC-1 and R-1051/URR 2N Modules, NAVSHIPS 95700, for 7.1 mc mixer adjustment procedures.

4-328A. 100 CPS OSCILLATOR, FUNCTIONAL CIRCUIT DESCRIPTION. (For purposes of nomenclature, the variable output oscillator of the 100-CPS synthesizer shall be referred to as the 100-cps oscillator.) The 100-cps oscillator (figure 4-48A) consists of a modified Colpitts (Clapp) oscillator Q2, a dc amplifier Q1, a buffer amplifier Q3, and a phase detector (integrated circuit IC1). The 100-cps oscillator, which forms a part of 100-CPS Synthesizer Electronic Subassembly A2A6A4, generates the 100-cps increments and vernier frequency. Tuning the oscillator from 110-119 kc in 1-kc steps and vernier frequency control from 108-123 kc is accomplished by reactance control circuit using voltage variable capacitors CR7, CR8 and CR9. When locked 100-cps steps are required, the phase detector IC1 furnishes the desired frequency control voltages. In vernier, the phase detector IC1 is disabled by removing its supply voltage. The voltage to the voltage variable capacitors CR7, CR8, and CR9 is the varied manually. The oscillator output is coupled to buffer amplifier Q3 whose input is stabilized by a set of limiting diodes CR5 and CR6.

4-328B. The positive 20-vdc supply voltage for all circuits of the 100-cps oscillator is obtained from main frame power supply A2A8.

4-328C. The tank circuit of oscillator Q2 consists of capacitors C9, C10, C11, C13, C14, C15, C5, and the voltage variable capacitors CR7, CR8, and CR9. Capacitor C14 is selected to adjust the initial frequency of oscillator Q2. The voltage variable capacitors CR7, CR8, and CR9 provide the required pulling range for the phase-lock loop. Capacitor C15 has a negative temperature coefficient to compensate for temperature changes in oscillator Q2. The parallel and series combination of the aforementioned capacitances results in a single variable capacity C1. A simplified a-c equivalent circuit of oscillator Q2 is included in figure 4-48B as an aid in analyzing the oscillator tank circuit. Figure 4-48B makes it readily evident that capacitor C1 and transformer T1 form the parallel resonant tank circuit of oscillator Q2.

4-328D. When operating voltage is applied to oscillator Q2, the oscillator produces an output of approximately 110 kc to 119 kc, depending on the setting of the CPS switch. These output frequencies will only approximate the desired operating frequencies until the phase-lock loop is closed. The output of oscillator Q2 is limited by diodes CR5 and CR6. Both the negative and the positive-going limit of the oscillator signal are established by the diode bias voltages developed across the secondary of transformer T1 and the forward voltage drop of the diodes.

4-328E. The output of oscillator Q2 is applied through transformer T1 to the base of amplifier Q3, which, in turn, develops the signal across resistor R10. Amplifier Q3 provides isolation for oscillator Q2, preventing succeeding stages from adversely loading the oscillator. The output of amplifier Q3 is coupled to the base of pulse shaper A1Q6 by capacitor C13. A small amount of degeneration is developed by unbypassed emitter resistor R8 to increase the stability of amplifier Q3.

4-328F. The 1-kc pulse output of the spectrum generator module is coupled directly to phase detector IC1. A reset pulse from counter A2A6A4A1 is also coupled directly to phase detector IC1. The output voltage from phase detector IC1 is applied to amplifier Q1 by the network consisting of resistor R3 and capacitor C3. The output of amplifier Q1 is filtered and then applied to the voltage variable capacitors to control the oscillator Q2 frequency.

4-328G. The phase detector is basically a flip-flop (figure 4-48C). The reset pulses are applied to both stages of the flip-flop while the 1-kc Standard Frequency Reference pulse is applied to one side only. Therefore, if the input frequencies are both equal, the output will be a pulse with a duration equal to the time between the input reference and the preset dividier output (reset pulse). If the output is a symmetrical waveform, the triggers are 180 degrees out of phase. When a low-pass filter is employed, the flip-flop output provides an average voltage which is a linear function of the phase difference. Thus, for the case where the phase-detector output is a symmetrical waveform (180

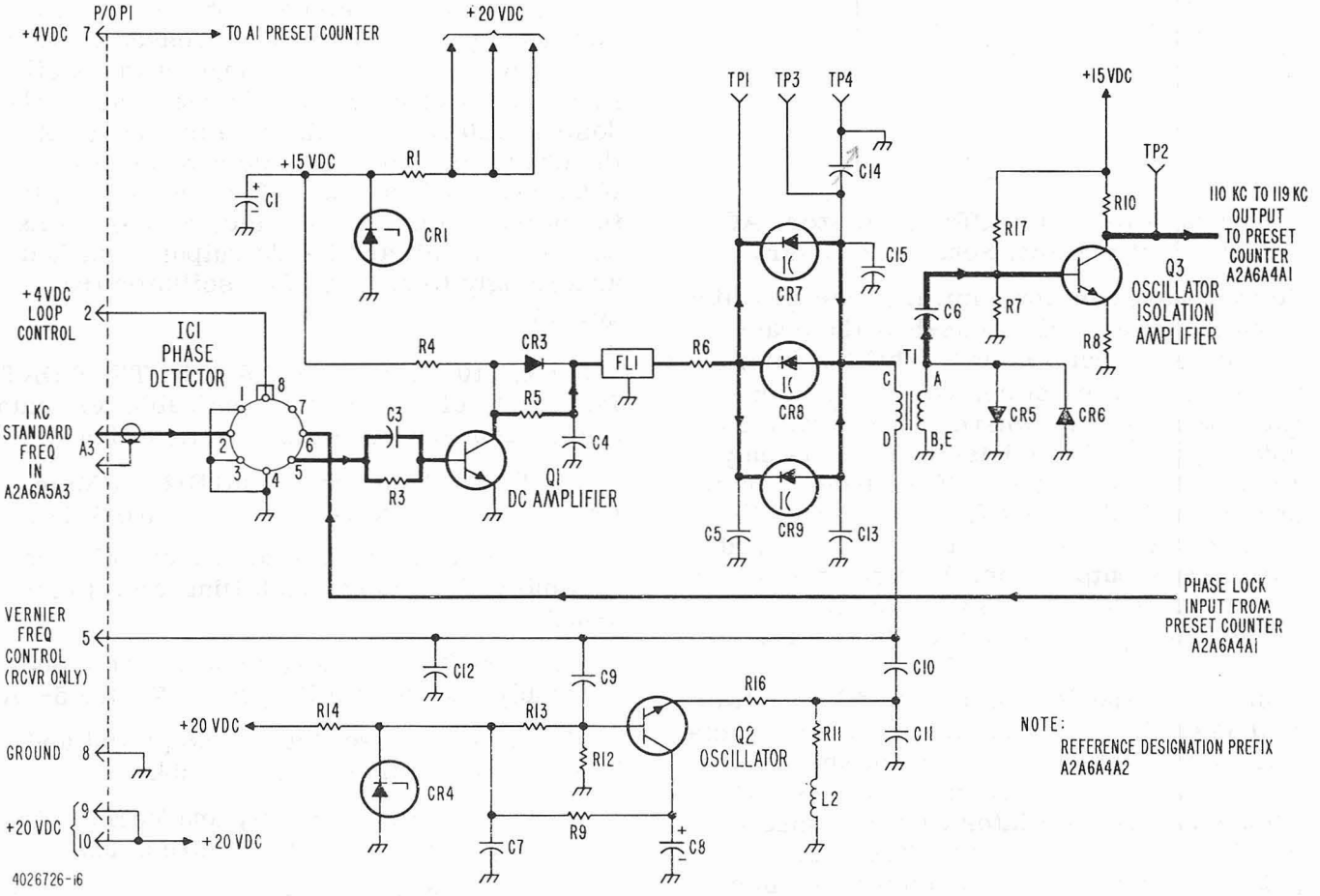

Figure 4-48A. 100 CPS Oscillator, Schematic Diagram

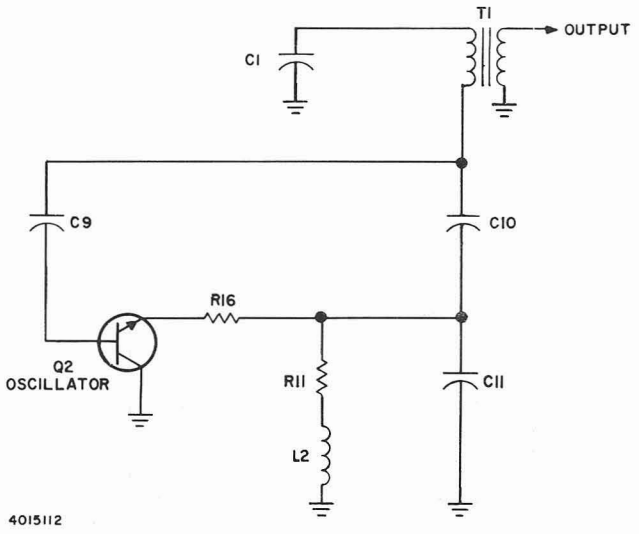

Figure 4-48B. 100 CPS Oscillator, AC Equivalent Circuit, Schematic Diagram

degree phase relationship), the average voltage from the filter will be one-half the peak-to-peak phase detector output. This circuit permits up to 360 degrees of control in phase between two signals, whereas the usual sinusoidal type of phase detector permits only 180 degrees of control. If the frequency of one signal is different from the other, the triggers will pass each other in time, and the average output from the circuit will be a sawtooth. These cases are shown in figure 4-48D, for $f_1 = f_2$, $f_2 > f_1$, and $f_1 > f_2$.

4-328H. In the feedback loop, filter network FL1 is designed to have a low pass characteristic with a cut-off frequency at about 250 cps, well above the loop cut-off frequency. Consequently, the oscillator capture range is equal to its hold-in range. The filtered dc output is then applied to the voltage variable capacitors CR7, CR8, and CR9 which execute reactance control of the oscillator tuning it to a frequency that is preset into the divider chain of counter A2A6A4A1.

4-328J. Assume that the output of the oscillator is 110.2 kc. The desired oscillator frequency is 110 kc. The oscillator output of 110.2 kc is coupled to the pulse shaper circuit of the counter. This output is then coupled to the preset dividers and divided down by a factor of 110 to a frequency of 1.02 kc. This output is coupled directly to phase detector IC1. A 1-kc pulse from the spectrum generator also is coupled directly to the phase detector. The two inputs of 1 kc and 1.02 kc are compared and an ac voltage (sawtooth waveform) is developed. This ac output is coupled to amplifier Q1 and filtered in the filter network FL1. The voltage is then applied to the voltage variable capacitors, CR7, CR8, and CR9, thus sweeping the oscillator frequency. Since the feedback loop is closed, this frequency decreases with time due to the decrease of the oscillator output frequency as it is being swept. After this sweep frequency has been decreased to a frequency within the pull-in range of the oscillator, the oscillator pulls in and locks at the desired 110 kc. At this time the output of the phase detector is the dc reference level. If the phase of the oscillator begins to drift, the phase difference is detected by the phase detector circuit and the dc output is shifted accordingly to correct the oscillator frequency.

4-328K. 100 CPS OSCILLATOR, TEST DATA. Pertinent references and applicable test data for the 100-cps oscillator are as follows:

a. Radio Receiver R-1051B/URR Main Frame, Schematic Diagram, Figure 5-1A.

b. 100 CPS Synthesizer Electronic Subassembly, Servicing Block Diagram, Figure 4-58A.

c. 100 CPS Synthesizer Electronic Subassembly, Schematic Diagram, Figure 5-9A.

d. 100 CPS Oscillator, Component and Test Point Location, Figure 5-94A.

e. 4 VDC Power Supply and Vernier Control Component Location, Figure 5-21A.

f. Required Test Equipment:

(1) Frequency Meter, CAQI-524D.

(2) Oscilloscope, AN/USM-105A.

(3) Heterodyne Voltmeter, CDAN-2005.

(4) Multimeter, AN/PSM-4.

(5) Translator/Synthesizer Test Set, TS-2133/WRC-1.

4-328L. PRESET COUNTER, FUNCTIONAL CIRCUIT DESCRIPTION. The preset counter circuits (figure 4-48E) consist of a pulse shaper (Q5 and Q6), three decade dividers (integrated circuits IC1, IC2, and IC3), an inverter

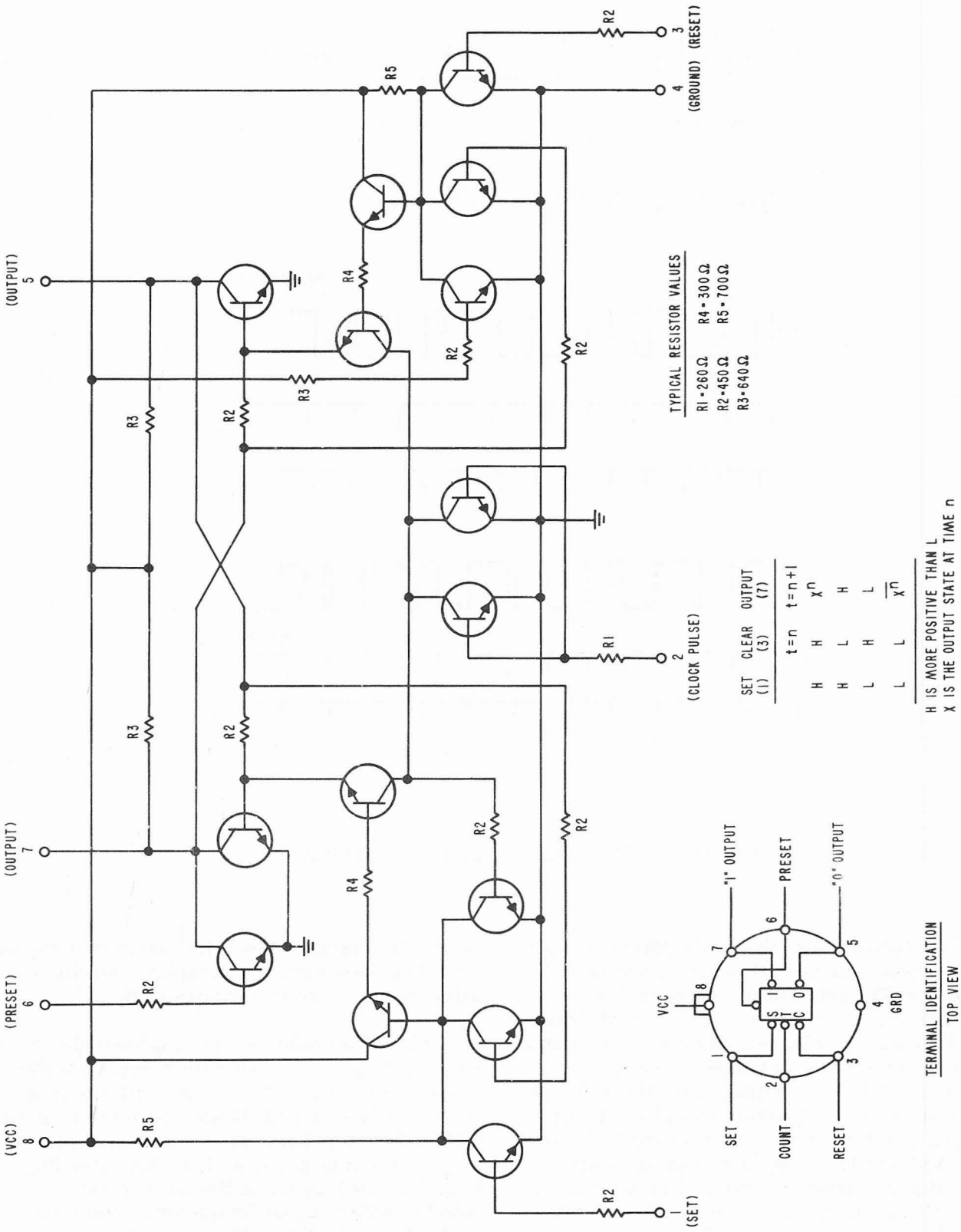

Figure 4-48C. Phase Detector (Integrated Circuit IC1), Simplified Schematic Diagram and Truth Table

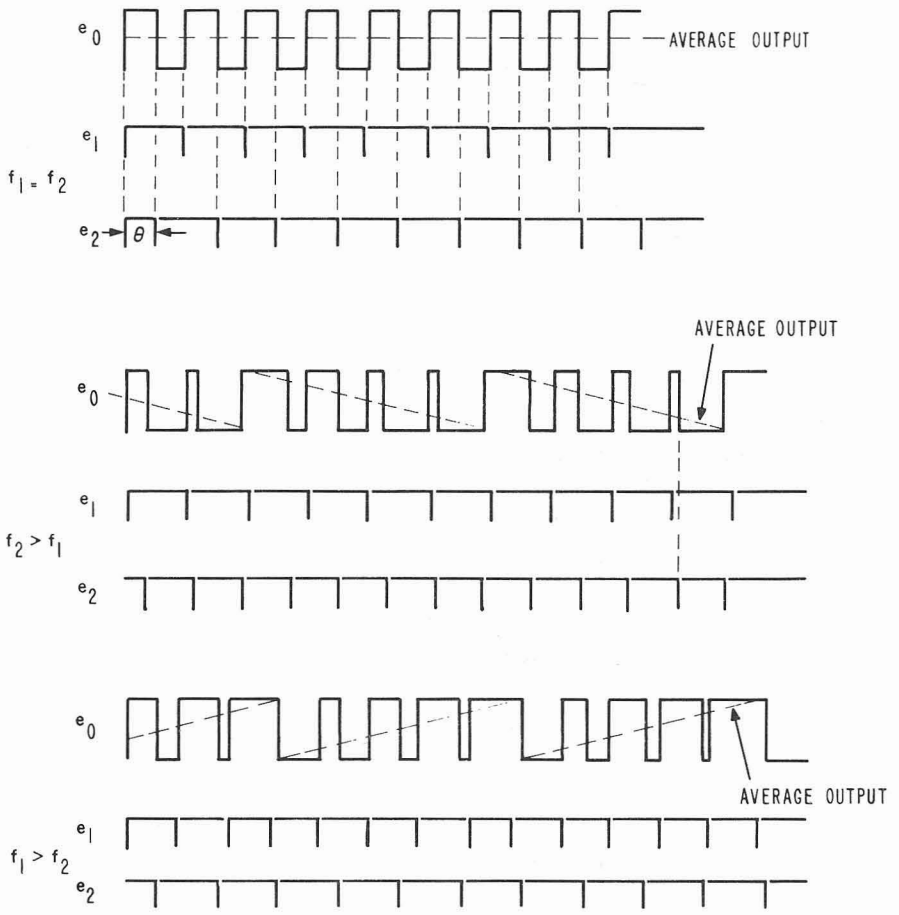

Figure 4-48D. Phase Detector, Waveforms

amplifier (Q8), a flip-flop (integrated circuit IC4), a reset pulser (Q1, Q2, Q3, and Q4), an amplifier (Q7), and emitter follower (Q9). These circuits form a part of 100 CPS Synthesizer Electronic Subassembly A2A6A4. These circuits provide two functions. They divide the 110-kc to 119-kc output from the 100-cps oscillator by ten to provide the 11-kc to 11.9-kc signal required for mixing in the 7.1-mc mixer A2A6A4A3. They generate a reset pulse, the frequency of which dictates whether any oscillator frequency error exists from that which is preselected. This reset pulse is coupled to phase detector A2A6A4A2IC1 for comparison to the 1-kc standard frequency. The following paragraphs describe operation of the counter circuits in detail.

4-328M. The pulse shaper, Q5 and Q6, is a Schmitt trigger circuit which receives the locked 110-kc to 119-kc sinusoidal output from the 100-cps oscillator through capacitor C13. This input signal is developed into a negative output pulse with a sharp leading edge for each cycle of the oscillator A2A6A4A2Q2 output frequency. Resistors R23, R24, R25, R26, R27, and R39 comprise resistive networks for developing the required

operating voltages for pulse shaper Q5 and Q6. The pulse shaper output is coupled directly to decade divider IC1 and to decade divider IC3 of the preset divider group.

4-328N. Operating voltage for the decade IC1 is applied from the 4-vdc supply. The divider provides one output pulse for every ten input pulses applied from the shaper. The 11-kc to 11.9-kc output from divider IC1 is coupled to amplifier Q7.

4-328P. The 11-kc to 11.9 kc output from decade divider IC1 is coupled to the base of amplifier Q7 by capacitor C16. The operating voltage for amplifier Q7 is developed by voltage divider R38, R30, and emitter resistors R32, R33 from the positive 20-vdc supply line. Decoupling is provided by capacitor C15 and resistor R31 to prevent interaction with other circuits connected to the positive 20-vdc supply line. Capacitor C17 is the emitter bypass capacitor of amplifier Q7. The amplified output signals from amplifier Q7 are developed across a tuned circuit consisting of capacitor C14 and the primary of transformer T1. Resistor R34 increases the bandwidth of the tuned circuit. The sinusoidal output from the secondary of transformer T1 is applied to the 7.1-mc mixer A2A6A4A3.

4-328Q. The preset divider is a digital device composed of integrated circuits IC2 to IC4 and coding from CPS switch, S6, on the front panel. When a preselected count is reached, a coincidence gate triggers a circuit which resets the dividers. The preset dividers are reset to zero and a count is initiated by the pulses derived from the oscillator A2Q2. This count continues until coincidence is reached at some digitally preselected count from S6 on the front panel, then a reset is generated. The reset-to-zero time of the counter must be shorter than the time between incoming pulses. When the counter is reset, a trigger is also generated for the binary phase detector A2IC1. If the oscillator frequency is precisely the frequency for which the preset divider is coded, the reset circuitry output will be exactly 1 kc. If, however, there is a 0.5 percent error in oscillator frequency, a reset trigger output frequency to the phase detector will contain the same percent error or 5 cps. When this signal is compared in the phase detector against the 1 kc derived from the frequency standard, a phase detector correction voltage is generated. This voltage, by means of A2CR7 thru A2CR9, corrects the oscillator frequency so that the divider output is 1 kc, thus maintaining the oscillator in lock with the frequency standard.

4-328R. Integrated circuits IC2 thru IC4 and Q8 is a preset divider which may be coded to divide by any number between 110-119. Therefore, any oscillator frequency between 110-119 kc may be divided down to 1 kc for phase comparison in the phase detector A2IC1 with the standard 1-kc reference pulse. This produces 1-kc increments from 110 kc to 119 kc. The preset divider chain is used to provide a coded count that is representative of the corresponding frequency digit.

4-328S. The decade divider IC3 has been designed to divide by a maximum of ten, but it may be programmed by S6 on the front panel to reset at any integer count less than ten. The four flip-flops in the decade are arranged to generate a binary code. This is accomplished by diode coding gates CR3 thru CR10 which, when energized, contribute to the generation of a reset pulse. The table included in figure 4-48F indicates what combination of coding leads must be energized in order to achieve the desired count in the dividers. Figure 4-48G indicates the method of programming a decade of the preset divider. The absence of coding voltage on any of the four gates effectively removes the flip-flop corresponding to that gate from the coincidence circuit. by selectively energizing 0, 1, 2, or 3 lines-per-decade, the coding from 0 to 9 is accomplished.

4-328T. The decade divider output is fed to integrated circuits IC2 and IC4 which are programmed by diodes CR11 through CR14 to divide by 11. Amplifier Q8 functions as a buffer-inverter amplifier between IC2 and IC4. Gate outputs from the decade and divide-by-eleven counters are summed to provide control voltage

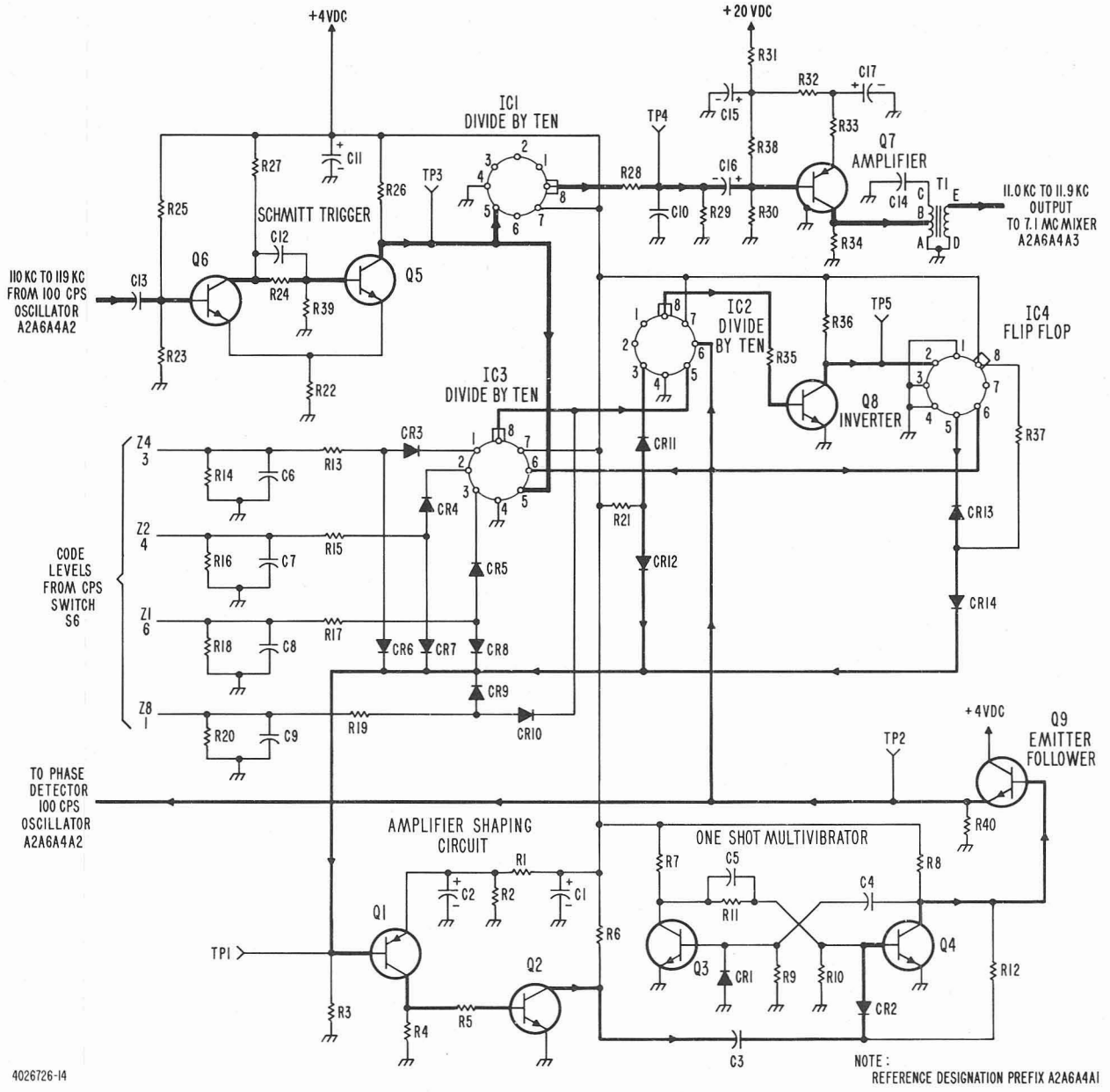

Figure 4-48E. Preset Counter, Schematic Diagram

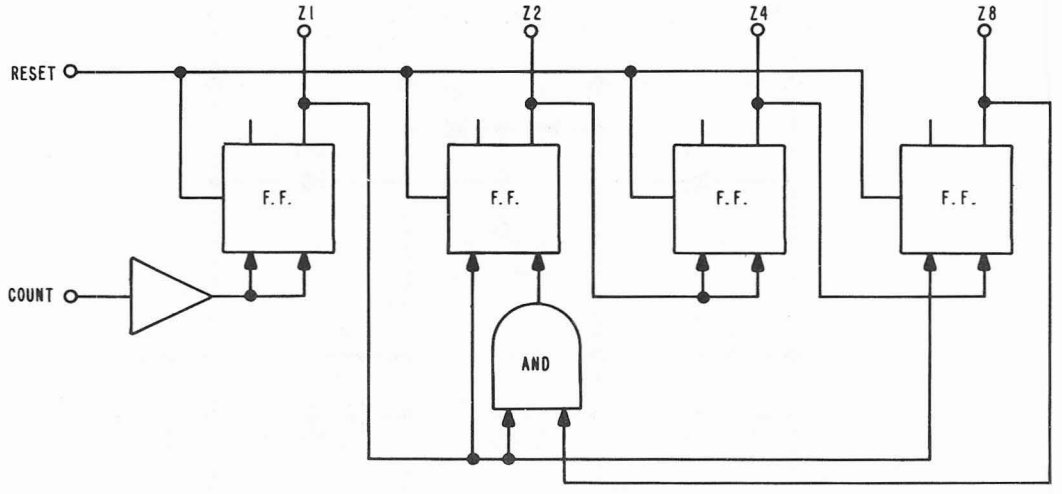

BLOCK DIAGRAM

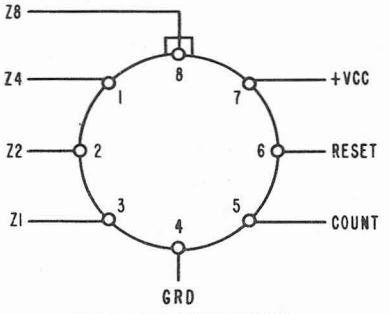

TERMINAL IDENTIFICATION
(TOP VIEW)

COUNT H = HIGH L = LOW

	0	1	2	3	4	5	6	7	8	9
Z1	H	L	H	L	H	L	H	L	H	L
Z2	H	H	L	L	H	H	L	L	H	H
Z4	H	H	H	H	L	L	L	L	H	H
Z8	H	H	H	H	H	H	H	H	L	L

TABLE OF OUTPUT STATES

Figure 4-48F. Decade Counter (IC1, IC2, IC3), Simplified Block Diagram and Truth Table

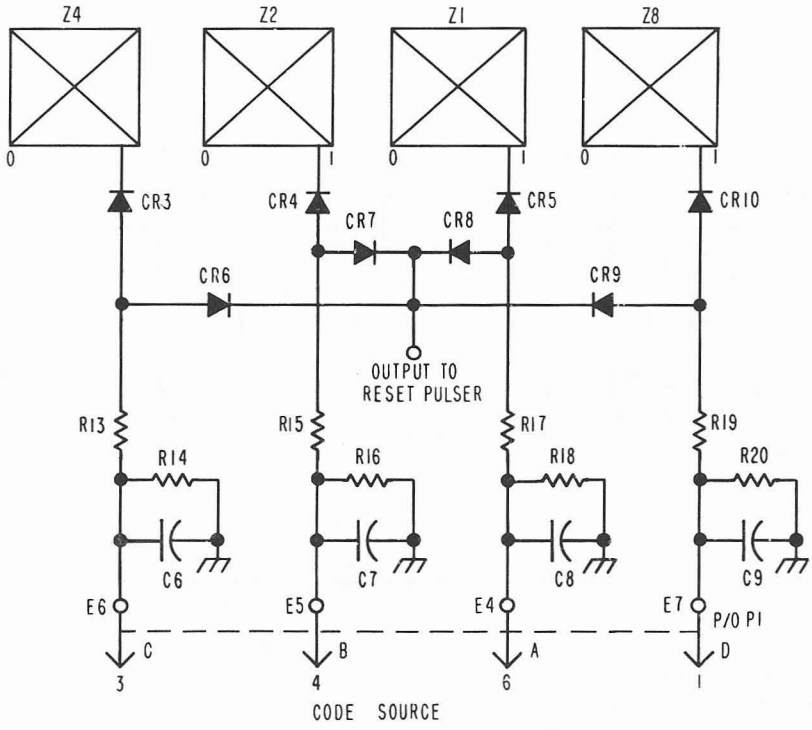

DECADE PROGRAM SEQUENCE

DESIRED COUNT	LINE CODE D	C	B	A
DIVIDE BY 110	0	0	0	0
111	0	0	0	1
112	0	0	1	0
113	0	0	1	1
114	0	1	0	0
115	0	1	0	1
116	0	1	1	0
117	0	1	1	1
118	1	0	0	0
119	1	0	0	1

4026726-24

Figure 4-48G. Decade Counter Coding Scheme

to the reset pulser. When the entire programmed count is reached, the disappearance of control voltage on the output gates (junction of diodes CR6 thru CR9) initiates a reset pulse.

4-328U. The reset pulser consists of a pair of overdriven amplifiers Q1 and Q2 which shape a pulse suitable to trigger the 7-microsecond delay multivibrator (DMV) Q3 and Q4. The DMV generates a 7-microsecond positive pulse which is applied through emitter follower Q9 to the reset circuit (pin 6) of all the integrated circuits in the preset divider group. The count is now complete and a new identical sequence follows.

4-328V. PRESET COUNTER, TEST DATA. Pertinent references and applicable test data for the preset counter are as follows:

a. Radio Receiver R-1051B/URR, Main Frame, Schematic Diagram, Figure 5-1A.

b. 100 CPS Synthesizer Electronic Subassembly, Servicing Block Diagram, Figure 4-58A.

c. 100 CPS Synthesizer Electronic Subassembly, Schematic Diagram, Figure 5-9A.

d. Preset Counter, Component and Test Point Location, Figure 5-94D.

e. Required Test Equipment:

(1) RF Signal Generator, CAQI-606A.

(2) RF Voltmeter, CCVO-91CA.

(3) Frequency Meter, CAQI-524D.

(4) Multimeter, AN/PSM-4.

(5) Translator/Synthesizer Test Set, TS-2133/WRC-1.

4-328W. 7.1 MC MIXER, FUNCTIONAL CIRCUIT DESCRIPTION. The 7.1 mixer (figure 4-48H) consists of an amplifier (Q4), a mixer (Q2), two emitter followers (Q1 and Q3), and a 7.1-mc crystal filter (FL1.) These circuits, which form a part of 100 CPS Synthesizer Electronic Subassembly A2A6A4, mix the 11-kc to 11.9-kc output from counter A2A6A4A1 with the 7.089-mc output from 7.089-mc mixer A2A6A3A4 to produce a nominal 7.1-mc output with the level suitable for use in 17.847/27.847 mixer A2A6A2A3. These circuits are used in all modes of operation. The following paragraphs describe the operation of the 7.1-mc mixer in detail.

4-328X. The sinusoidal output from transformer A2A6A4A1T1 is coupled to the base of emitter follower Q1 by capacitor C15. The operating voltage for emitter follower Q1 is developed by voltage divider R2, R3. Resistor R1 and capacitor C1 provide decoupling to prevent interaction with the other circuits connected to the positive 20-vdc supply line. Emitter follower Q1 provides a low impedance source for mixer Q2. The output from emitter follower Q1 is developed across resistor R4 and coupled to the emitter of mixer Q2 by capacitor C2.

4-328Y. The operating voltage for mixer Q2 is developed from the positive 20-vdc supply line by emitter resistor R5 and voltage divider R7, R8. Resistor R21 and capacitor C4 provide decoupling to prevent interaction with the other circuits connected to the positive 20-vdc supply line. Capacitor C3 is the emitter bypass capacitor. Due to the large difference in frequency between the two inputs, resistor R6 develops a small amount of degeneration to increase the stability of mixer Q2. The 7.089-mc output from 7.089-mc mixer A2A6A3A4 is coupled to the base of mixer Q2 by capacitor C5. Transistor Q2 mixes the 11-kc to 11.9-kc signal with the 7.089-mc signal to provide one of ten fixed outputs depending upon the position of the CPS control on the front panel. If the 11 kc is used (front panel CPS control at 000 setting), the mixing products are 11 kc, 7.089 mc, 7.078 mc, and 7.1 mc. If the 11.9 kc is used (front panel CPS control at 900 setting), the mixer products are 11.9 kc, 7.089 mc, 7.0771 mc, and 7.1009 mc. One of these two groups of mixing products is developed across resistor R9. The signals developed across resistor R9 are applied to filter FL1. Filter FL1 is very selective, allowing only the 7.100 mc to 7.1009 mc signals to pass. Capacitor C7 and resistor R9, and capacitor C8 and resistor R10 for the input and output terminations, respectively, for crystal filter FL1. The output from filter FL1 is coupled to the base of emitter follower Q3 by capacitor C16.

4-328Z. The operating voltage for emitter follower Q3 is developed from the positive 20-vdc supply line by voltage divider R11, R12, and emitter resistor R15. Resistor R13 and capacitor C11 provide decoupling to prevent interaction with the other circuits connected to the positive 20-vdc supply line. Emitter follower Q3 isolates filter FL1 to prevent it from being adversely loaded by amplifier Q4. The output from emitter follower Q3 is developed across resistor R15 and is coupled to the base of amplifier Q4 by capacitor C10.

4-328AA. The operating voltage for amplifier Q4 is developed by voltage divider R16, R18, and emitter resistor R19. Resistor R17 and capacitor C12 provide decoupling to prevent interaction with the other circuits connected to the positive 20-vdc supply line. Capacitor C14 is the emitter bypass capacitor. The amount of gain provided by amplifier Q4 is controlled by adjusting the amount of degeneration developed by potentiometer R20. The amplified output from amplifier Q4 is developed across the tuned circuit consisting of capacitor C13 and the primary of transformer T1 and is applied to 17.847/27.847 mixer A2A6A2A3.

4-328AB. 7.1 MC MIXER, TEST DATA. Pertinent references and applicable test data for the 7.1-mc mixer are as follows:

a. Radio Receiver R-1051B/URR Frame, Schematic Diagram, Figure 5-1A.

b. 100 CPS Synthesizer Electronic Subassembly, Servicing Block Diagram, Figure 4-58A.

c. 100 CPS Synthesizer Electronic Subassembly, Schematic Diagram, Figure 5-9A.

d. 7.1 MC Mixer, Components and Test Point Location, Figure 5-94F.

e. Required Test Equipment:

(1) RF Signal Generator, CAQI-606A.

(2) RF Voltmeter, CCVO-91CA.

(3) Frequency Meter, CQAI-524D.

(4) Multimeter, AN/PSM-4.

(5) Translator/Synthesizer Test Set, TS-2133/WRC-1.

4-328AC. 4 VDC POWER SUPPLY, FUNCTIONAL CIRCUIT DESCRIPTION. This power supply (figure 5-1A) provides a source of 4 vdc, a dc voltage to the VERNIER control, and a turn-on voltage to the neon VERNIER lamp on the front panel.

4-328AD. The input power of 20 vdc is applied from the main supply (A2A8) through the 100 CPS Synthesizer module. When the 100 CPS Synthesizer module is removed from the unit, input power is removed from the 4-vdc supply. The 20-vdc input is applied at terminal A11E7. Voltage divider network A11R1 through A11R3 provides approximately 11.5 vdc to the remote VERNIER control A2R7. Potentiometer A11R2 is used to adjust the dc voltage applied to the VERNIER control. Zener diode CR2 limits the dc voltage swing of the remote VERNIER control to approximately 3.3 volts. Zener diode CR1 drops the 20-vdc input to 4 vdc which is applied through terminal A11E6 to the 100 CPS Synthesizer module. Resistors A11R6 and A11R7 are current-limiters for the ac voltage applied to VERNIER lamp A2DS5 located on the front panel. The +110 dc is present at terminal A11E9 only when the remote CPS switch is placed in the VERNIER position.

4-328AE. 4 VDC POWER SUPPLY AND VERNIER CONTROL, TEST DATA. Pertinent references for the 4 VDC Power Supply and Vernier Control are as follows:

a. Radio Receiver R-1051B/URR Main Frame, Schematic Diagram, Figure 5-1A.

b. 4 VDC Power Supply and Vernier Control, Component Location, Figure 5-21A.

4-328AF. 1 KC SPECTRUM GENERATOR INVERTER (A2A6A5A4) FUNCTIONAL CIRCUIT DESCRIPTION (Used on R-1051B).

4-328AG. The positive 1 KC pulsed output of the divide-by-five multivibrator Q3, Q4 is inverted by Q1 (inverter circuit A2A6A5A4) before being applied through J1 of P22 to the 100 cycle synthesizer. This is a normal NPN base-input amplifier whose sole purpose is pulse inversion. Input resistor R4 pre-

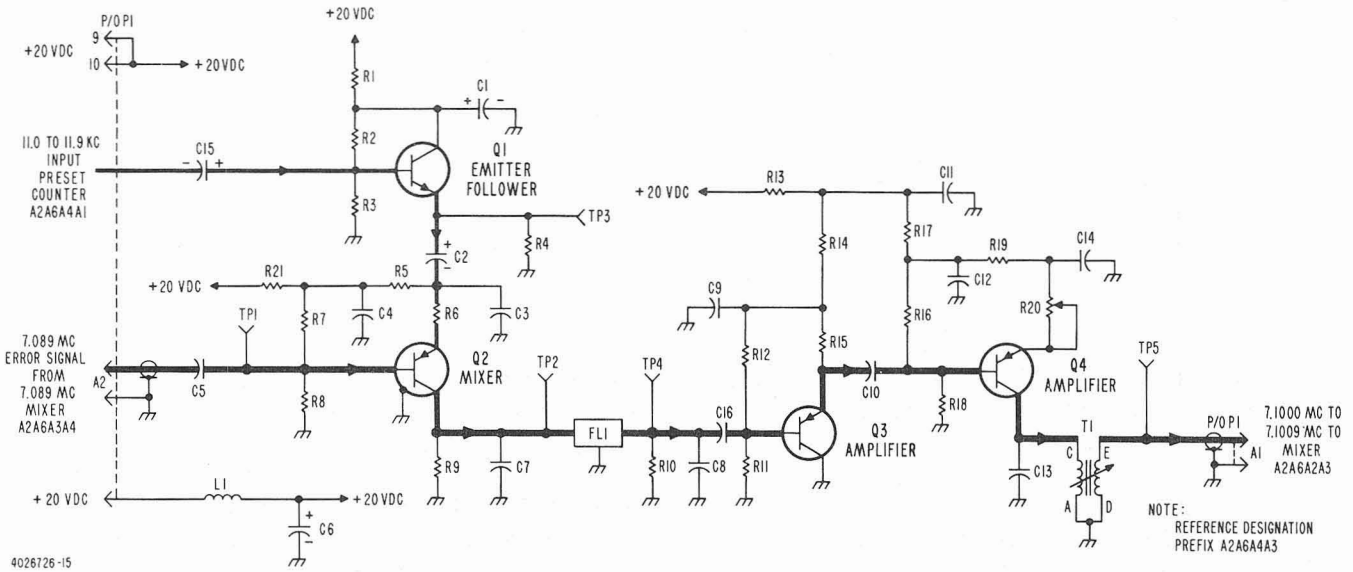

Figure 4-48H. 7.1 MC Mixer, Simplified Schematic Diagram

vents loading the divide-by-five multivibrator. Resistance-capacitance circuit R1-C1 decouples the transistor circuit from the power supply. Output loading is made up of R2 and R3 in parallel. Proper transistor collector voltage is provided by the resistance ratio of R3 to R2.

4-329. POWER SUPPLY, FUNCTIONAL CIRCUIT DESCRIPTION.

4-330. The Power Supply (figure 4-49) consists of the +110-vdc supply, the +28-vdc supply, the -30-vdc supply, and the regulated +20 vdc supply. These circuits which form a part of the Receiver Main Frame A2, supply operating power to all the circuits of the R-1051/URR. The following paragraphs describe the operation of the power supply in detail.

4-331. All power is derived from the nominal 115-vac line, which is applied through switches A2S7, A2S8, A2S2 and fuses A2F1, A2F2 to the primary power transformer A2T1. Indicator lamps A2DS1 and A2DS2 will light if fuses A2F1 and A2F2 open. The primary of transformer A2T1 is tapped, so that, in locations where line voltages differ slightly from the normal 115 vac on a reasonably permanent basis, one can compensate for the difference by reconnecting to a new tap. The 6.3 vac from terminals 13 and 14 of the secondary of transformer A2T1 supplies power to the filaments of rf amplifiers V1 and V2 in RF Amplifier Electronic Assembly A2A4. The output from terminals 7 and 8 of transformer A2T1 is applied to a bridge rectifier consisting of diodes CR1 through CR4; the output of the bridge is applied to a choke input filter consisting of choke A2L1 and capacitor A2C1. The output of the choke input filter, +110 vdc, is used to supply plate and screen voltage to rf amplifiers V1 and V2 in RF amplifier Electronic Assembly A2A4 and to light the vernier tuning indicator. Resistor A2R20 is a bleeder load for the +110-vdc supply. The output from terminals 9 and 10 of transformer A2T1 is applied to a bridge rectifier consisting of diodes CR5 through CR8; the output of the bridge is applied to a choke input filter consisting of choke A2L2 and capacitor C2. The output of the choke input filter, +28 vdc, is used in the RF Amplifier, Frequency Standard, Receiver IF./Audio Amplifiers, and Translator/Synthesizer Electronic Assemblies. The regulated +20-vdc supply is derived from the +28-volt supply. Resistor A2R8 is the bleeder load for the +28-vdc supply. When primary power is supplied, lamps A2A10DS3 and A2A10DS4 light, illuminating the frequency display windows above the MCS and KCS controls. Resistors R1 and R2 are series drop-

ping resistors. The output from terminals 11 and 12 of transformer T1 is applied to a bridge rectifier consisting of diodes CR9 through CR12; the output of the bridge is applied to a filter network consisting of resistor R3 and capacitor C3. The output from this network is applied to resistor R4 and Zener diodes CR13 and CR14. Since the Zener voltage of each diode is 15 vdc, the output from this network is regulated -30 vdc. Capacitor C4 is used to provide additional filtering. The -30 vdc is used in the step agc circuit of Receiver IF./Audio Amplifier Electronic Assembly A2A2 and A2A3.

4-332. The regulated +20 vdc supply consists of series regulator A2Q1, dc amplifiers Q1 and Q2, comparators Q3 and Q4, 12-vdc Zener diode CR16, and 4.7-vdc Zener diode CR17. This circuit provides a constant +20 vdc regardless of the load. The input voltage of +28 vdc is applied to the collector of series regulator A2Q1, through contacts 7 and 6 of section C front of switch S2, in any position other than OFF or STDBY, and contacts 8 and 6 of relay A2K1. If the MCS controls are set in their 00 or 01 positions, a ground is applied to relay A2K1, causing it to energize. This cuts off the input to the +20 vdc supply unless the operating frequency is 2.0 to 30.0 mc. The collector-to-emitter resistance is directly proportional to the amount of base-to-emitter current. The output voltage, +20 vdc in this case, is selected by adjusting Output Voltage Control (R14), which determines the bias voltage on comparator Q4. The bias voltage determines the amount of emitter current flow, thereby determining the voltage across emitter resistor R12. Since the bias voltage on the base of comparator Q3 is held constant by Zener diode CR17, the collector current flow will be determined by the emitter voltage. The emitter of comparator Q3 is connected to the emitter of comparator Q4; therefore, collector current of comparator Q3 will be controlled by the bias voltage on comparator Q4. Since the base voltage of dc amplifier Q2 is held constant by Zener diode CR16, the collector current flow is controlled by the collector voltage on comparator Q3. The collector current of dc amplifier Q1 is controlled by the collector current of dc amplifier Q2. The collector current through resistor R5 determines the bias voltage on the base of series regulator A2Q1, which, in turn, determines the emitter-to-collector resistance.

4-333. In order to better understand the operation of the regulated +20-vdc supply, assume that some of the load on the +20-vdc supply has been removed. This condition causes the base-bias voltage of comparator Q4 to increase, thereby increasing the voltage across resistor R12. This increase causes a decrease in the base-to-emitter voltage in comparator Q3, thereby causing an increase in collector voltage. Since the emitter of the dc amplifier is connected to the collector of comparator Q3, and the base voltage is held constant by Zener diode CR16, the increase in collector voltage in comparator Q3 causes the collector current to decrease in dc amplifier Q2. Since the collector of dc amplifier Q2 is connected to the base of

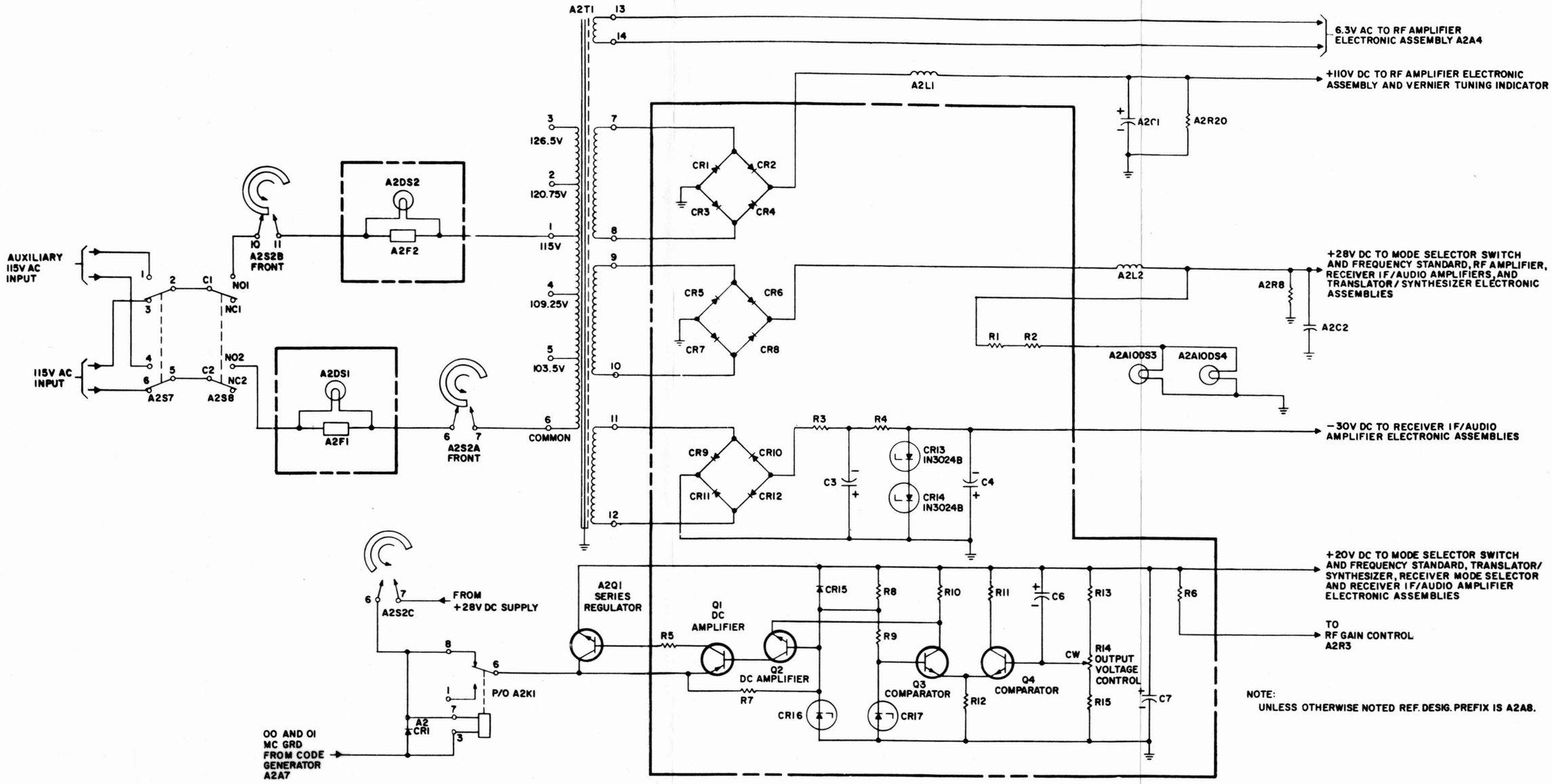

Figure 4-49. Power Supply, Simplified Schematic Diagram

CAUTION

When making resistance checks at semi-conductor devices, use only the higher scales of the multimeter so as to avoid unintentional damage to the semi-conductor device due to the meters internal voltage.

dc amplifier Q1, the decrease in collector current in dc amplifier Q2 causes a decrease in collector current in dc amplifier Q1. Since the collector of dc amplifier Q1 is connected to the base of series regulator A2Q1 through resistor R5, a decrease in collector current in dc amplifier Q1 causes the collector-to-emitter resistance to increase, thereby causing the output voltage to return to +20 vdc. Resistor R5 acts as a parasitic suppressor. Diode CR15 protects the circuit if the +20 vdc line is accidentally grounded. Normally, diode CR15 is back-biased by the +20 vdc on its anode and +12 vdc on its cathode. If the +20 vdc line becomes grounded, the diode will be forward-biased, dropping the base of dc amplifier Q2 to ground potential and preventing damaging current flow in dc amplifiers Q1 and Q2.

4-334. POWER SUPPLY, TEST DATA.

4-335. Pertinent references and applicable test data for the Receiver Power Supply Electronic Assembly are as follows:

a. Radio Receiver R-1051/URR, Main Frame, Schematic Diagram, Figure 5-1.

b. Required Test Equipment:

(1) Multimeter, AN/PSM-4.

(2) Oscilloscope, AN/USM-105A.

c. Receiver Power Supply Electronic Assembly, Component and Test-Point Location, Figure 5-18.

d. 20-volt Regulator, Adjustment, Paragraph 5-4.

4-336. TUNING, FUNCTIONAL CIRCUIT DESCRIPTION.

4-337. The tuning circuit (figure 4-50) consists of code generator A2A7; switch S1, motor B1, and relay K1 in RF Amplifier Electronic Assembly A2A4; and switch S1, motor B1, and relay K1 in 1 MC Synthesizer Electronic Subassembly A2A6A1. Code generator A2A7 consists of switches S3 and S4, which form three parallel open-seeking tuning circuits, each employing a five wire coding scheme. Two of these tuning circuits generate a tuning code for positioning the turret assembly in RF Amplifier Electronic Assembly A2A4 and the crystal switch in 1 MC Synthesizer Electronic Subassembly A2A6A1. The third tuning circuit is not used in tuning the R-1051/URR. The following paragraphs describe the tuning circuits for the R-1051/URR in detail.

4-338. Switches S3 and S4 in A2A7 are controlled by the 10 mcs (MCS) and 1 mcs (MCS) controls on the front panel. These two switches are analogously represented (figure 4-50) by sections A, B, C, D, and E; sections A and C form two 28-position masters and sections B and D form two 28-position images. For the schematic diagram of these switches, see figure 5-12. Section A establishes the tuning code for turret switch S1 in RF Amplifier Electronic Assembly A2A4, and section C establishes the tuning code for crystal switch S1 in 1 MC Synthesizer Electronic Subassembly A2A6A1. The tuning code generated by section A is one of 28 series of opens and grounds; each series represents one of the 28 tuning positions of turret switch S1 (refer to table 4-2). Although section C is also a 28-position switch, the tuning code it generates is one of 17 series of opens and grounds; each series represents one of the 17 positions of crystal switch S1 (refer to table 4-2). Section A (master) applies the coded information to turret switch S1-A (master). This establishes a ground path through the common contact of S1-A to pin 7 of turret motor relay K1; since positive 28 vdc is applied to pin 3, the ground causes relay K1 to energize. When turret motor relay K1 energizes, turret motor B1 is energized by application of positive 28 vdc through contacts 5 and 2 of turret motor relay K1. When energized, motor B1 rotates turret switch S1 until the complement of the code on section A (master) is reflected by turret motor switch S1-A (master). Whenever the codes on the two masters are complementary, the ground path to turret motor relay K1 is broken, causing it to de-energize. Similarly, section C generates a code to energize crystal switch S1 motor, and to rotate crystal switch S1 to the position established by the 1 and 10 mc (MCS) controls on the front panel.

4-339. The image switches in code generator A2A7 (sections B and D), turret switch S1-B, and crystal switch S1-B, always have the complementary code of their respective masters. This ensures that the ground,or grounds, will be applied to the masters whenever a new code is selected. This is accomplished by the cut of the wafer, which is the exact mirror image of the respective master. All contacts appearing as opens at the master appear as grounds at the image, and vice versa.

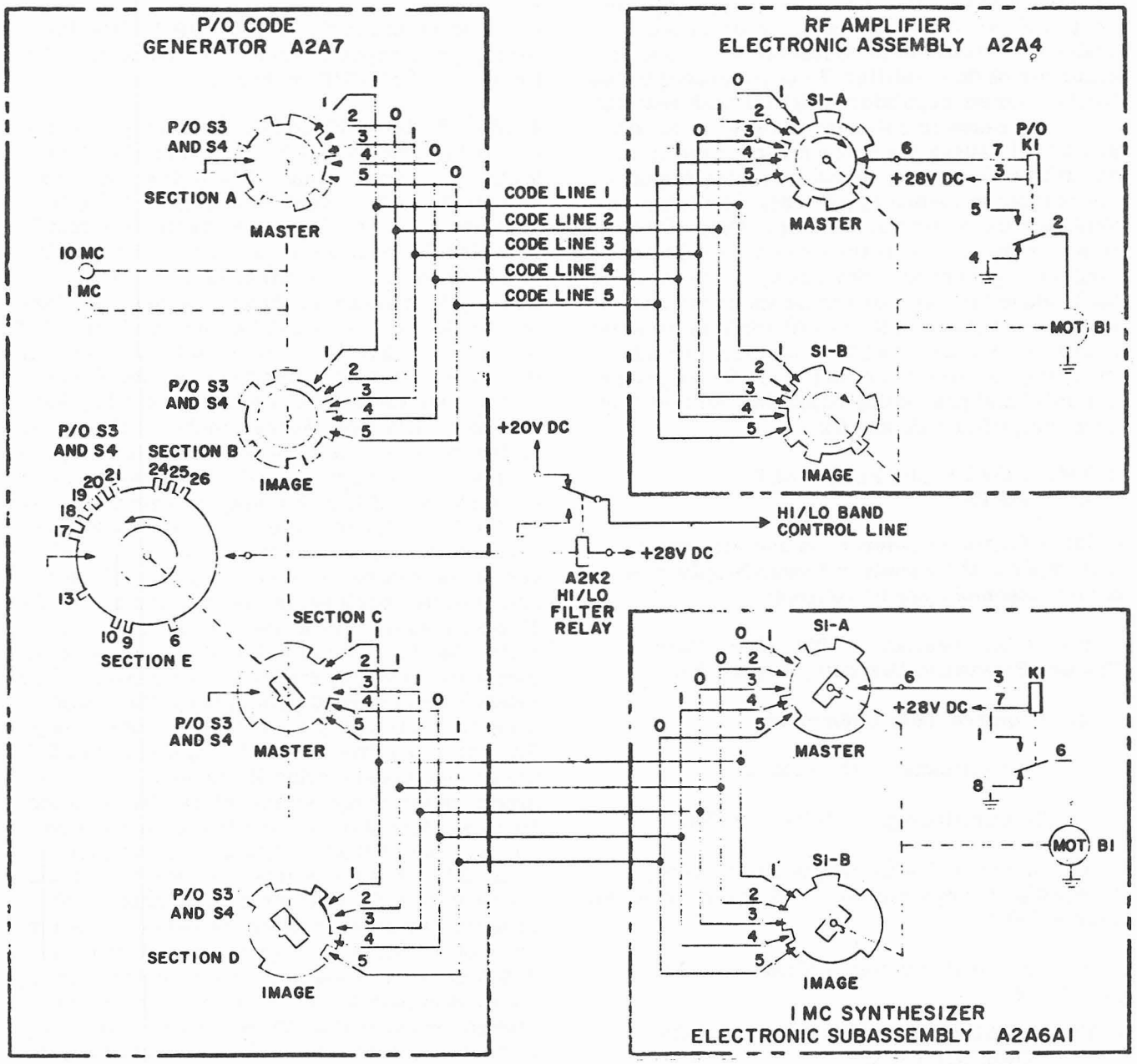

Figure 4-49. Power Supply, Simplified Schematic Diagram

4-340. In figure 4-50 sections A and B are positioned to represent the code 10100 (x2.xxx mc). If the MCS controls on the front panel were set at x3.xxx mc, sections A and B would be rotated one position counterclockwise, creating the new code 01000 (refer to table 4-2). A ground path would be established to pin 7 of turret motor relay K1 through code line 2 and turret motor switch S1-A. This energizes turret motor relay K1, which in turn energizes turret motor B1. Turret motor switch S1 is rotated until image code 10111 is reflected by turret motor switch S1-A. At this time, the ground path is broken, causing turret motor relay K1 to de-energize. Ground is then applied through contacts 2 and 4 of turret motor relay K1 to turret motor B1. This dynamically brakes turret motor B1. If the MCS controls on the front panel were set to 22.xxx mc rather than x2.xxx mc, the code generated by section A would have been 10000. As shown in figure 4-50, there is no ground path directly between the two masters. This time the ground path would be through code line 1 to turret motor

TABLE 4-2. TUNING CODE CHART

MCS AND 100 KCS CONTROLS	A2A4 CODES LINES					A2A6A1 CODES LINES				
SETTING	1	2	3	4	5	1	2	3	4	5
2	1	0	1	0	0	1	1	1	0	1
3	0	1	0	0	0	1	0	1	1	1
4	1	0	0	0	1	1	1	0	1	1
5	0	0	0	1	1	0	1	1	0	1
6	0	0	1	1	0	0	1	0	0	0
7	0	1	1	0	1	1	0	0	1	1
8	1	1	0	1	1	1	1	0	0	1
9	1	0	1	1	0	1	0	1	0	0
10	0	1	1	0	0	1	1	0	1	0
11	1	1	0	0	0	0	0	1	1	1
12	1	0	0	0	0	0	0	0	1	1
13	0	0	0	0	1	1	0	1	1	1
14	0	0	0	1	0	0	1	1	1	0
15	0	0	1	0	1	0	0	1	1	0
16	0	1	0	1	1	1	1	1	1	0
17	1	0	1	1	1	1	0	0	1	1
18	0	1	1	1	1	1	1	0	0	1
19	1	1	1	1	0	1	1	1	0	0
20	1	1	1	0	0	0	1	1	1	1
21	1	1	0	0	1	0	0	1	1	1
22	1	0	0	1	0	0	0	0	0	1
23	0	0	1	0	0	1	1	1	1	0
24	0	1	0	0	1	0	1	1	1	0
25	1	0	0	1	1	0	0	1	1	0
26	0	0	1	1	1	1	1	1	1	0
27	0	1	1	1	0	0	0	0	1	1
28	1	1	1	0	1	0	0	1	1	1
29	1	1	0	1	0	0	1	1	1	1

switch S1-B (image), code line 3 to section B (image), and code line 2 to turret motor switch S1-A (master). Therefore, the ground path to turret motor relay K1 is estabished using the images. In like manner, any code can be traced, and the tuning of turret switch S1 will be accomplished for any code shown in table 4-2. Similarly, the codes shown in table 4-2 can energize crystal switch motor B1 and tune crystal switch S1 to the position established by the MCS controls on the front panel.

4-341. Section E of code generator A2A7 generates the hi/lo band control line codes. The wiper of section E remains open until it is placed in an mc position that has a tab. At this time, ground is applied to hi/lo filter relay A2K2, causing it to energize. When relay A2K2 is energized, ground is placed on the hi/lo band control line. When hi/lo filter relay A2K2 is de-energized, a positive 20 vdc is applied to the hi/lo band control line.

4-342. TUNING, TEST DATA.

4-343. Pertinent references and applicable test data for the tuning circuit are as follows:

a. Radio Receiver R-1051/URR, Main Frame, Schematic Diagram, Figure 5-1.

b. RF Amplifier Electronic Assembly, Receive Mode, Schematic Diagram, Figure 5-4.

c. 1 MC Synthesizer Electronic Subassembly, Schematic Diagram, Figure 5-6.

d. Receiver Code Generator, Schematic Diagram, Figure 5-12.

e. RF Amplifier Electronic Assembly, Front and Left Side Views, Component Location, Figure 5-32.

f. RF Amplifier Electronic Assembly, Rear and Right Side Views, Component Location, Figure 5-33.

g. RF Amplifier Electronic Assembly, Turret Removed, Front and Left Side Views, Component and Test-Point Location, Figure 5-51.

h. RF Amplifier Electronic Assembly, Turret Removed, Rear and Right Side Views, Component and Test-Point Location, Figure 5-53.

i. 1 MC Synthesizer Electronic Subassembly, Front View, Component Location, Figure 5-66.

j. 1 MC Synthesizer Electronic Subassembly, Rear View, Component Location, Figure 5-69.

k. Code Generator Electronic Assembly, Component Location, Figure 5-102.

l. Required Test Equipment: Multimeter, AN/PSM-4.

4-344. CONTROL SWITCHING, FUNCTIONAL DESCRIPTION.

4-345. The control switching circuits (figure 5-1) consist of switches S2, S7 and S9 and relays K1 and K3. These circuits, which form a part of main frame A2, energize and key the applicable circuits according to the selected mode of operation. The following paragraphs describe the control switching circuits in detail. All components in the following paragraphs have reference designator prefix A2.

4-346. Primary power for the R-1051/URR is received via pins R and S of connector J4 on the rear of the R-1051/URR. In the NORM position of AUX/NORM switch (S7), the nominal 115 vac is connected through interlock switch S8. If desired, primary power may be routed directly to the R-1051/URR by placing AUX/NORM switch (S7) in the AUX position and connecting the primary power to pins A and C of connector J3, thus bypassing the normal input. From interlock switch S8, one side of the 115 vac line (J4-S) passes through fuse F1 to contact 6 of the front part of section A of switch S2, which is an open circuit in the OFF position. The other side of the 115 vac line (J4-R) comes from interlock switch S8 and goes directly to contact 10 of the front part of section B of Mode Selector switch (S2) which also is an open circuit in the OFF position. In the STD-BY position of Mode Selector switch (S2), one side of the 115 vac line is switched directly to terminal 6 of power transformer T1. The other side of the 115 vac line is switched through section B of switch S2 and fuse F2 to terminal 1 of power transformer T1. Therefore, the power input circuit of the R-1051/URR is completed, and transformer T1 and the 6.3 vac, 110 vdc, -30 vdc and 28 vdc power supplies are energized (see paragraph 4-329). The 28 vdc is routed to Frequency Standard Electronic Assembly A5,

TABLE 4-3. MODE SELECTOR SWITCH S2, LSB POSITION

FUNCTION	FROM	THROUGH SWITCH	THROUGH CONTACTS	TO
+28 vdc	K1-6	S2-D-R	4 and 3	J19-1
+110 vdc	Power supply A8	S2-B-R	10 and 9	K3-6
+20 vdc	Power supply A8	S2-A-R	4 and 2	J19-7
+20 vdc	K3-4	S2-C-F	11 and 10	J17-5
		S2-B-R	3 and 2	J19-11 and J19-18
-30 vdc	Power supply A8	S2-D-F	12 and 2	J19-19
GRD	Ground	S2-A-F	11 and 9	J18-17
		S2-A-R	10 and 8	J16-1
LSB Audio	R4	S2-B-F	1 and 3	J21-13

where the 5 mc oscillator and its associated oven-control circuits are energized. The 110 vdc and -30 vdc power supplies are not used in the STD-BY position of Mode Selector switch (S2).

4-347. In any "on" position of Mode Selector switch (S2)(USB, CW, for example), 28 vdc from Power Supply A8 is routed through contacts 7 and 6 of the front part of section C of switch S2. This 28 vdc is applied to RF Amplifier Electronic Assembly A4 and 1 MC Synthesizer Electronic Subassembly A6A1 and contact 6 of SIMPLEX/DUPLEX switch (S9). It is also applied to contact 8 and coil contact 7 of tune relay K1 and coil contact 7 of hi/lo filter relay K2. For operation of hi/lo filter relay K2 see paragraph 4-336. When tune relay K1 is de-energized, the 28 vdc on contact 8 is routed through contact 6 to contacts 4 and 6 on the rear part of section D of switch S2 and also to the regulated 20 vdc supply, providing energizing voltage (see paragraph 4-329). The 20 vdc from power supply A8 is routed through contacts 2 and 4 of transmit/receive relay K3 to pin 4 of connector J17 and pin 6 of connector J16 on Receiver Mode Selector Electronic Assembly A1. Tune relay K1 is energized by a ground applied to coil contact 3 from pin 7 of connection J8 on code generator A7, whenever the MCS dials are tuned to 00 or 01, or whenever the R-1051/URR is being tuned. Provisions are made on pins J and K of connector J4 on the rear panel of the R-1051/URR to receive 28 vdc and a ground keyline respectively from a transmitter used with the R-1051/URR. When SIMPLEX/DUPLEX switch (S9) is in the SIMPLEX position, the 28 vdc will be routed through contacts 4 and 5 to coil contact 7 of transmit/receive relay K3. When the T-827/URT is energized a ground is routed through contacts 1 and 2 of switch S9 and contacts 4 and 2 of tune relay K1 to coil contact 3 of transmit/receive relay K3, thereby energizing it. When transmit/receive relay K3 is energized, the 110 vdc path through contacts 6 and 8 of K3 is broken and the 20-vdc path through contacts 2 and 4 of relay K3 is broken. When SIMPLEX/DUPLEX switch (S9) is in the DUPLEX position transmit/receive relay K3 is energized during tuning by 28 vdc routed through contacts 6 and 5 of switch S9 to coil contact 7 of relay K3 and by a ground routed through contacts 5 and 2 of tune relay K1 to coil contact 3 of relay K3.

4-348. SWITCHING FUNCTIONS FOR MODE SELECTOR SWITCH S2. Paragraphs 4-349 through 4-354 contain switching functions information for the Mode Selector switch S2. All components in the following tables have the reference designation prefix A2. Switch parts are abbreviated in the following tables, for example: S2-A-R means the rear part of section A of switch S2 and S2-C-F means the front part of section C of switch S2.

4-349. LSB Position of Mode Selector Switch S2. Table 4-3 contains information concerning voltage routing through Mode Selector switch S2 in the LSB mode of operation.

4-350. FSK Position of Mode Selector Switch S2. Table 4-4 contains information concerning voltage routing through Mode Selector switch S2 in the FSK mode of operation.

4-351. AM Position of Mode Selector Switch S2. Table 4-5 contains information concerning voltage routing through Mode Selector switch S2 in the AM mode of operation.

TABLE 4-4. MODE SELECTOR SWITCH S2, FSK POSITION

FUNCTION	FROM	THROUGH		TO
		SWITCH	CONTACTS	
+28 vdc	K1-6	S2-D-R	4 and 5	J18-1
+110 vdc	Power supply A8	S2-B-R	10 and 9	K3-6
+20 vdc	Power supply A8	S2-A-R	4 and 5	J18-7
+20 vdc	K3-4	S2-C-F	11, 10 and 12	J17-5, J18-11
		S2-C-R	3, 6 and 2	J16-1, J18-15
-30 vdc	Power supply A8	S2-D-F	11 and 10	J18-19
GRD	ground	S2-A-F	10 and 12	J16-2, J18-17
USB Audio	R5	S2-B-F	4 and 2	J21-13

TABLE 4-5. MODE SELECTOR SWITCH S2, AM POSITION

FUNCTION	FROM	THROUGH		TO
		SWITCH	CONTACTS	
+28 vdc	K1-6	S2-D-R	4 and 5	J18-1
+110 vdc	Power supply A8	S2-B-R	10 and 11	K3-6
+20 vdc	Power supply A8	S2-A-R	4 and 5	J18-7
+20 vdc	K3-4	S2-C-F	11 and 12	J18-11
		S2-C-R	10 and 8	J16-2, J18-17
-30 vdc	Power supply A8	S2-D-F	11 and 10	J18-19
GRD	ground	S2-A-R	10 and 11	J16-1
AM Audio	R5	S2-B-F	5 and 3	J21-13

4-352. CW Position of Mode Selector Switch S2. Table 4-6 contains information concerning voltage routing through MODE SELECTOR switch S2 in the CW mode of operation.

4-353. USB Position of Mode Selector Switch S2. Table 4-7 contains information concerning voltage routing through MODE SELECTOR switch S2 in the USB mode of operation.

TABLE 4-6. MODE SELECTOR SWITCH S2, CW POSITION

FUNCTION	FROM	THROUGH		TO
		SWITCH	CONTACTS	
+28 vdc	K1-6	S2-D-R	6 and 5	J18-1
+110 vdc	Power supply A8	S2-B-R	10 and 9	K3-6
+20 vdc	Power supply A8	S2-A-R	4 and 5	J18-7
+20 vdc	K3-4	S2-C-F	2 and 1	J18-11
		S2-C-R	3, 4 and 8	J17-2, R6, J16-2, J18-17
-30 vdc	Power supply A8	S2-D-F	11 and 10	J18-19
GRD	ground	S2-A-R	10 and 11	J16-1
Audio	R5	S2-B-F	4 and 6	J21-13

TABLE 4-7. MODE SELECTOR SWITCH S2, USB POSITION

FUNCTION	FROM	THROUGH		TO
		SWITCH	CONTACTS	
+28 vdc	K1-6	S2-D-R	4 and 5	J18-1
+110 vdc	Power supply A8	S2-B-R	10 and 11	K3-6
+20 vdc	Power supply A8	S2-A-R	6 and 5	J18-7
+20 vdc	K3-4	S2-C-F	2, 3 and 1	J17-5, J18-11
		S2-C-R	10 and 12	J16-1
		S2-D-R	12 and 11	J18-18
-30 vdc	Power supply A8	S2-D-F	11 and 10	J18-19
GRD	ground	S2-A-F	1 and 3	J16-2, J18-17
USB Audio	R5	S2-B-F	5 and 7	J21-13

4-354. ISB Position of Mode Selector Switch S2. Table 4-8 contains information concerning voltage routing through Mode Selector switch S2 in the ISB mode of operation.

TABLE 4-8. MODE SELECTOR SWITCH S2, ISB POSITION

FUNCTION	FROM	THROUGH SWITCH	THROUGH CONTACTS	TO
+28 vdc	K1-6	S2-D-R	4, 5 and 3	J18-1, J14-1
+110 vdc	Power supply A8	S2-B-R	10 and 9	K36
+20 vdc	Power supply A8	S2-A-R	4, 5 and 2	J18-7, J19-7
+20 vdc	K3-4	S2-C-F	2, 3 and 4	J17-5, J18-11
		S2-B-R	6 and 8	J19-11, J19-18
		S2-C-R	10 and 6	J16-1
		S2-D-R	12 and 11	J18-18
-30 vdc	Power supply A8	S2-D-F	11 and 10	J18-19
		S2-D-F	7 and 6	J19-19
GRD	ground	S2-A-F	4 and 2	J16-2, J18-17
ISB Audio	J4-W	S2-B-F	8 and 6	J21-13

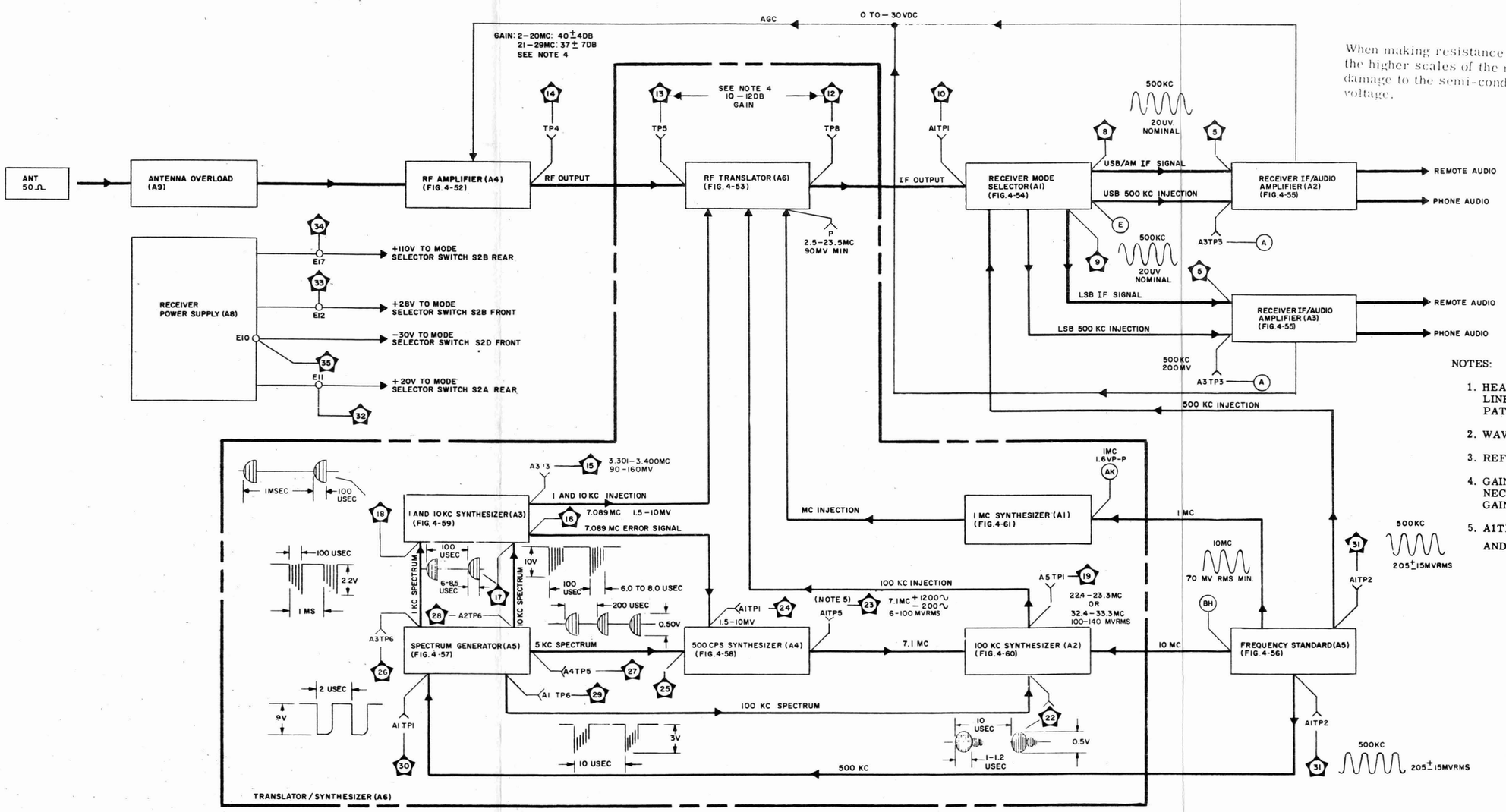

CAUTION

When making resistance checks at semi-conductor devices, use only the higher scales of the multimeter so as to avoid unintentional damage to the semi-conductor device due to the meters internal voltage.

NOTES:

1. HEAVY LINES INDICATE MAIN SIGNAL PATHS; LIGHT LINES INDICATE AUXILIARY OR SECONDARY SIGNAL PATHS.
2. WAVEFORMS RECORDED ON OSCILLOSCOPE AN/USM-105A.
3. REF. DESIG. PREFIX A2.
4. GAIN MEASURED EASIER WITH AGC VOLTAGE DISCONNECTED (REMOVE RECEIVER MODE SELECTOR (A1)). GAIN EXPRESSED AS DB ABOVE PREVIOUS STAGE.
5. A1TP5 DELETED ON UNIT SER. NO. 186 AND ABOVE AND TP 23 CONNECTS TO A1E8.

Figure 4-51. Radio Receiver R-1051/URR, Overall Servicing Block Diagram

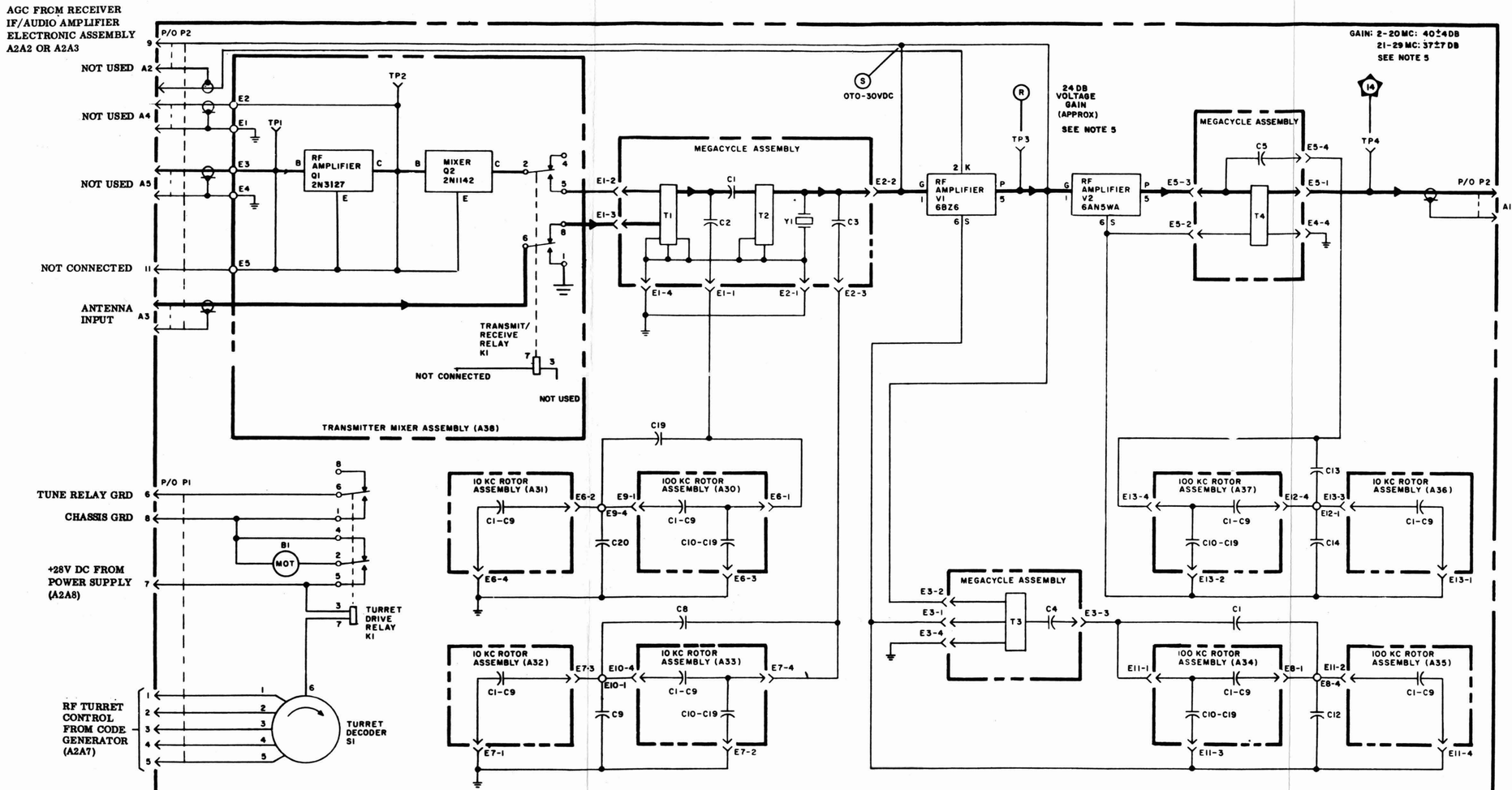

NOTES:

1. HEAVY LINES INDICATE MAIN SIGNAL PATHS; LIGHT LINES INDICATE AUXILIARY OR SECONDARY SIGNAL PATHS.
2. LETTERS OUTSIDE TRANSISTOR AND TUBE BLOCKS INDICATE ELEMENTS.
3. ALL VOLTAGES ARE DC UNLESS OTHERWISE SPECIFIED.
4. REF. DESIG. PREFIX A2A4.
5. GAIN COMPARED TO INPUT VOLTAGE WITH AGC VOLTAGE DISCONNECTED (MODE SELECTOR ELECTRONIC ASSEMBLY REMOVED).

Figure 4-52. RF Amplifier Electronic Assembly, Servicing Block Diagram

CAUTION

When making resistance checks at semi-conductor devices, use only the higher scales of the multimeter so as to avoid unintentional damage to the semi-conductor device due to the meters internal voltage.

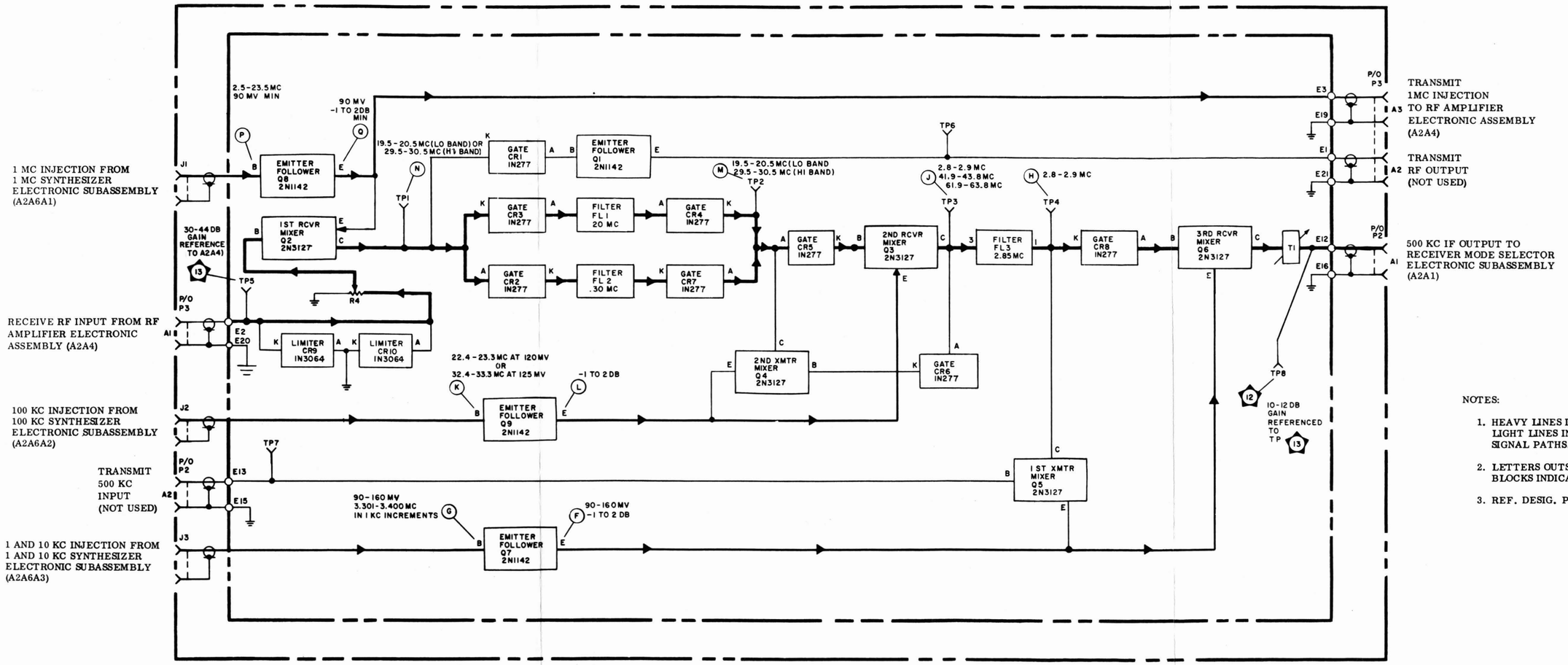

NOTES:

1. HEAVY LINES INDICATE MAIN SIGNAL PATHS; LIGHT LINES INDICATE AUXILIARY OR SECONDARY SIGNAL PATHS.
2. LETTERS OUTSIDE TRANSISTOR AND DIODE BLOCKS INDICATE ELEMENTS.
3. REF. DESIG. PREFIX A2A6A6.

Figure 4-53. RF Translator Electronic Subassembly, Servicing Block Diagram

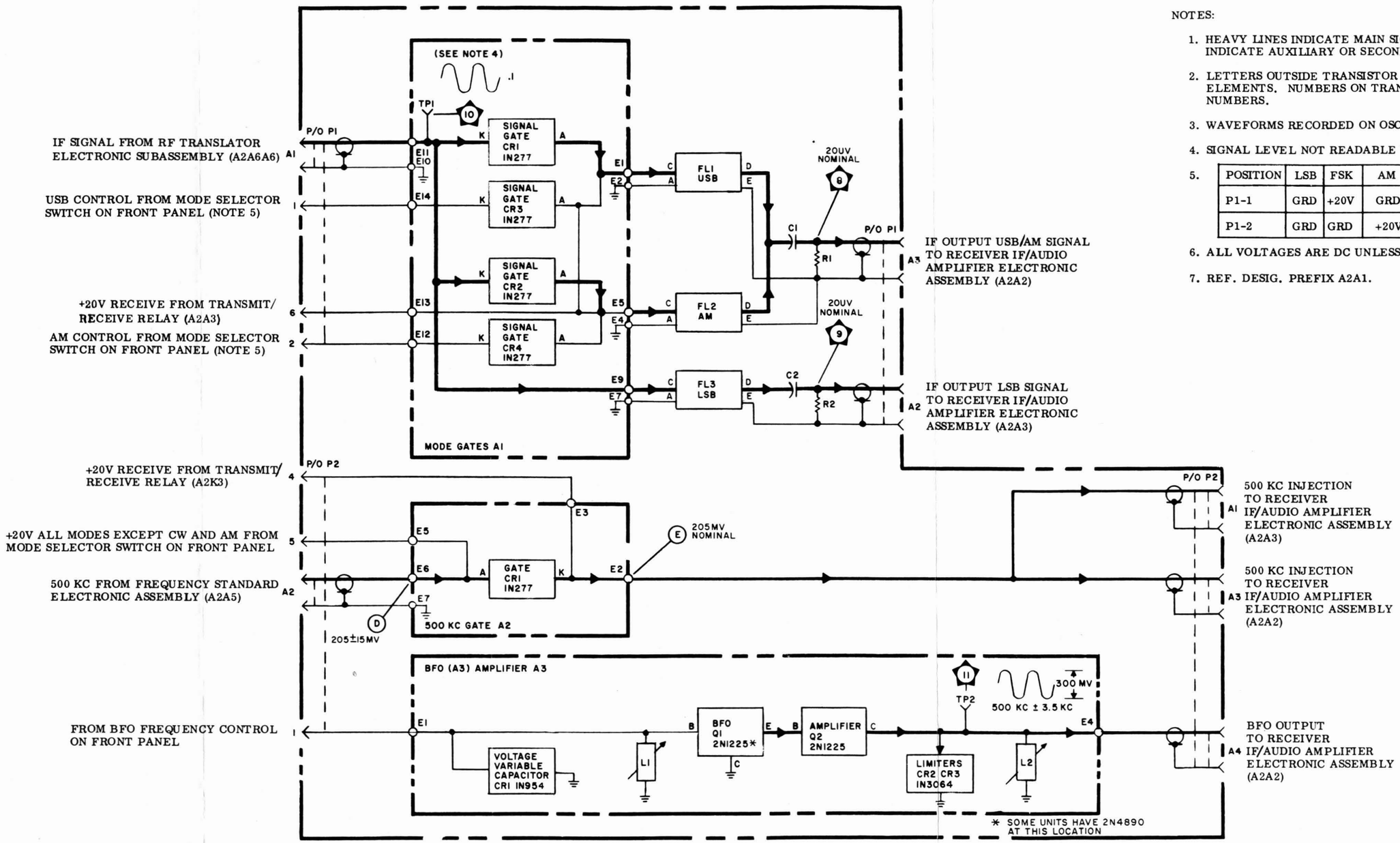

NOTES:

1. HEAVY LINES INDICATE MAIN SIGNAL PATHS; LIGHT LINES INDICATE AUXILIARY OR SECONDARY SIGNAL PATHS.
2. LETTERS OUTSIDE TRANSISTOR AND DIODE BLOCKS INDICATE ELEMENTS. NUMBERS ON TRANSFORMERS INDICATE TERMINAL NUMBERS.
3. WAVEFORMS RECORDED ON OSCILLOSCOPE AN/USM-105A.
4. SIGNAL LEVEL NOT READABLE WITH OSCILLOSCOPE SENSITIVITY.
5.

POSITION	LSB	FSK	AM	CW	USB	ISB
P1-1	GRD	+20V	GRD	GRD	+20V	+20V
P1-2	GRD	GRD	+20V	+20V	GRD	GRD

6. ALL VOLTAGES ARE DC UNLESS OTHERWISE SPECIFIED.
7. REF. DESIG. PREFIX A2A1.

Figure 4-54. Receiver Mode Selector Electronic Assembly, Servicing Block Diagram

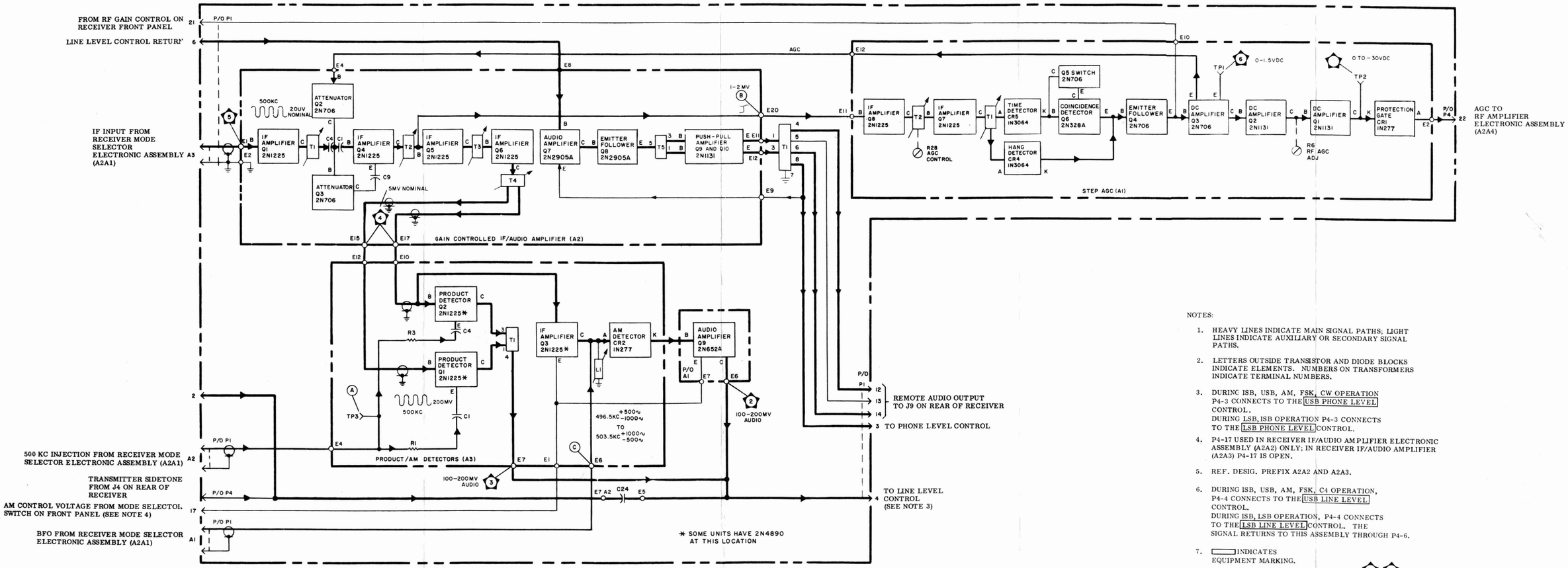

NOTES:

1. HEAVY LINES INDICATE MAIN SIGNAL PATHS; LIGHT LINES INDICATE AUXILIARY OR SECONDARY SIGNAL PATHS.
2. LETTERS OUTSIDE TRANSISTOR AND DIODE BLOCKS INDICATE ELEMENTS. NUMBERS ON TRANSFORMERS INDICATE TERMINAL NUMBERS.
3. DURING ISB, USB, AM, FSK, CW OPERATION P4-3 CONNECTS TO THE USB PHONE LEVEL CONTROL.
   DURING LSB, ISB OPERATION P4-3 CONNECTS TO THE LSB PHONE LEVEL CONTROL.
4. P4-17 USED IN RECEIVER IF/AUDIO AMPLIFIER ELECTRONIC ASSEMBLY (A2A2) ONLY; IN RECEIVER IF/AUDIO AMPLIFIER (A2A3) P4-17 IS OPEN.
5. REF. DESIG. PREFIX A2A2 AND A2A3.
6. DURING ISB, USB, AM, FSK, C4 OPERATION, P4-4 CONNECTS TO THE USB LINE LEVEL CONTROL.
   DURING ISB, LSB OPERATION, P4-4 CONNECTS TO THE LSB LINE LEVEL CONTROL. THE SIGNAL RETURNS TO THIS ASSEMBLY THROUGH P4-6.
7. ▭ INDICATES EQUIPMENT MARKING.
8. TEST POINT MEASUREMENTS (EXCEPT ⑥, ⑦) TAKEN WITH 0 V DC AGC VOLTAGE, 1 UV INPUT TO RECEIVER.

Figure 4-55. Receiver IF./Audio Amplifier Electronic Assembly, Servicing Block Diagram

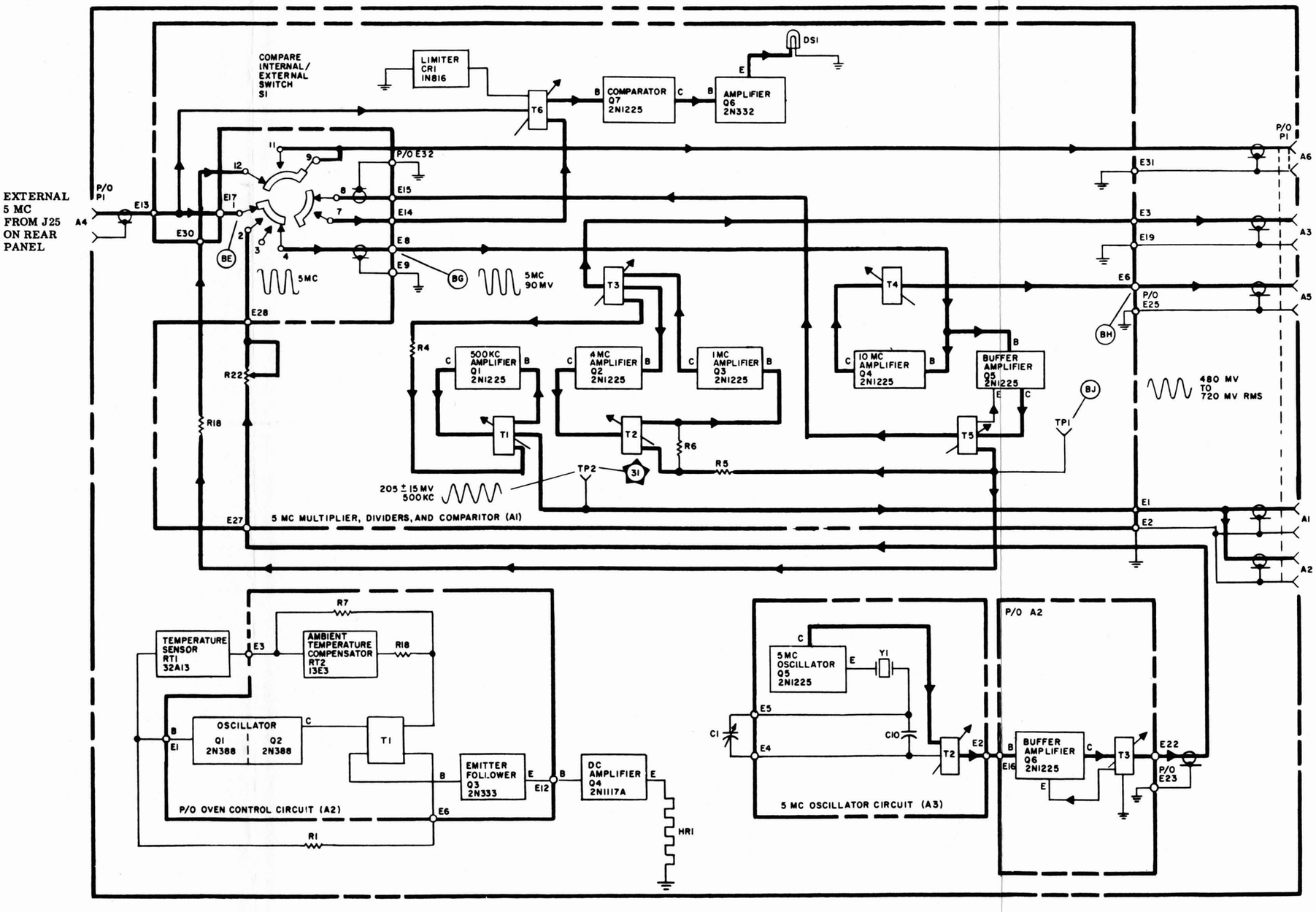

NOTES:

1. HEAVY LINES INDICATE MAIN SIGNAL PATHS; LIGHT LINES INDICATE AUXILIARY OR SECONDARY SIGNAL PATH.
2. LETTERS OUTSIDE TRANSISTOR AND DIODE BLOCKS INDICATE ELEMENTS. NUMBERS ON TRANSFORMERS INDICATE TERMINAL NUMBERS.
3. WAVEFORMS RECORDED USING OSCILLOSCOPE AN/USM-105A.
4. REF. DESIG. PREFIX A2A5.
5. SWITCH S1 IS SHOWN IN EXTERNAL POSITION.

Figure 4-56. Frequency Standard Electronic Assembly, Servicing Block Diagram

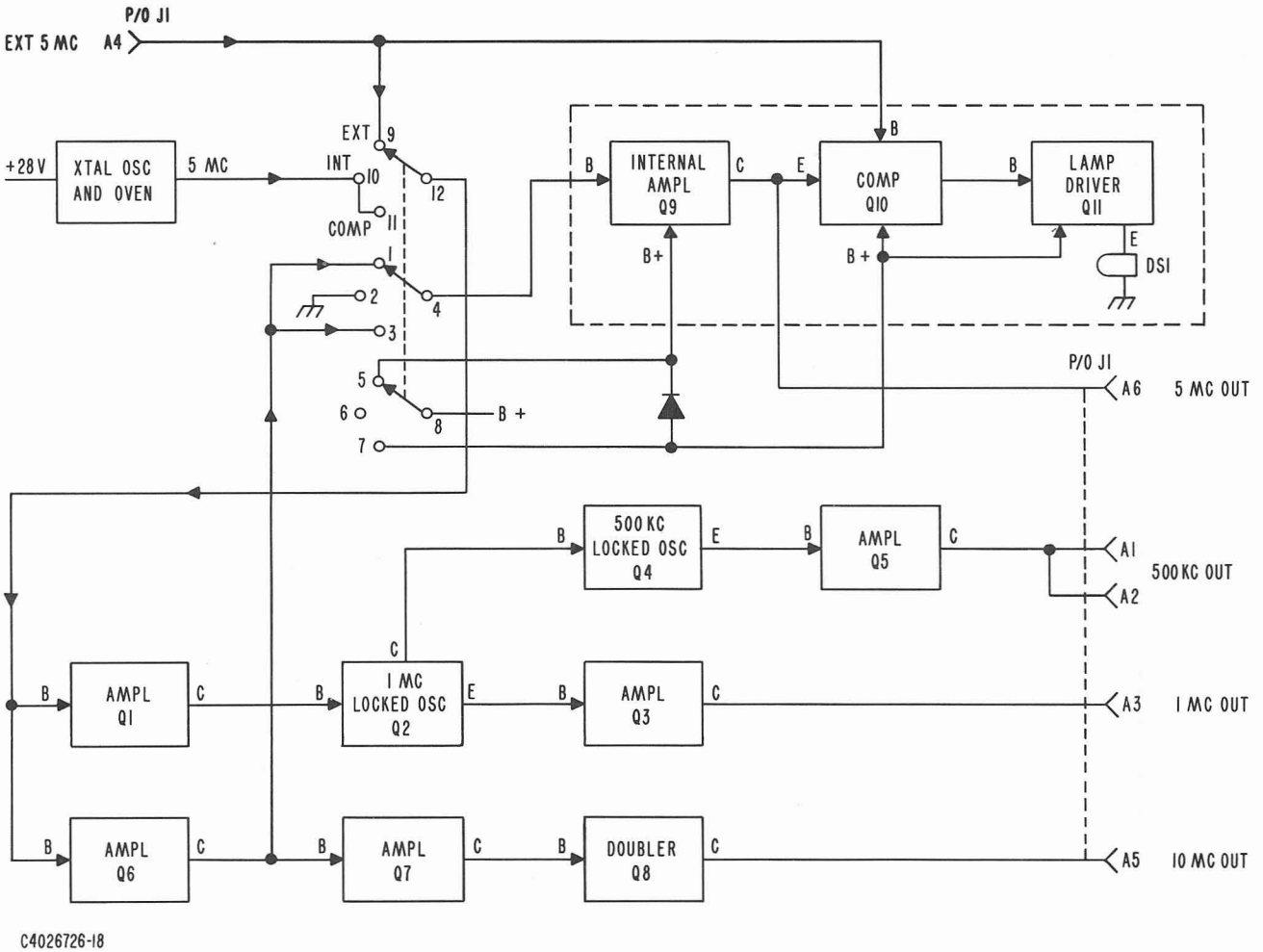

"Furnished under United States Government Contract No. NOBSR 93204. Shall not be either released outside the Government, or used, duplicated, or disclosed in whole or in part for manufacture or procurement, without the written permission of Frequency Electronics Inc., except for: (1) emergency repair or overhaul work by or for the Government, where the item or process concerned is not otherwise reasonably available to enable timely performance of the work; or (ii) release to a foreign government, as the interests of the United States may require; provided that in either case the release, use, duplication or disclosure hereof shall be subject to the foregoing limitations. This legend shall be marked on any reproduction hereof in whole or in part."

Figure 4-56A. Frequency Standard, Electronic Assembly, Servicing Block Diagram (Used on R-1051B/URR)

0.2V RMS 500 KC FROM FREQUENCY STANDARD ELECTRONIC ASSEMBLY (A2A5)

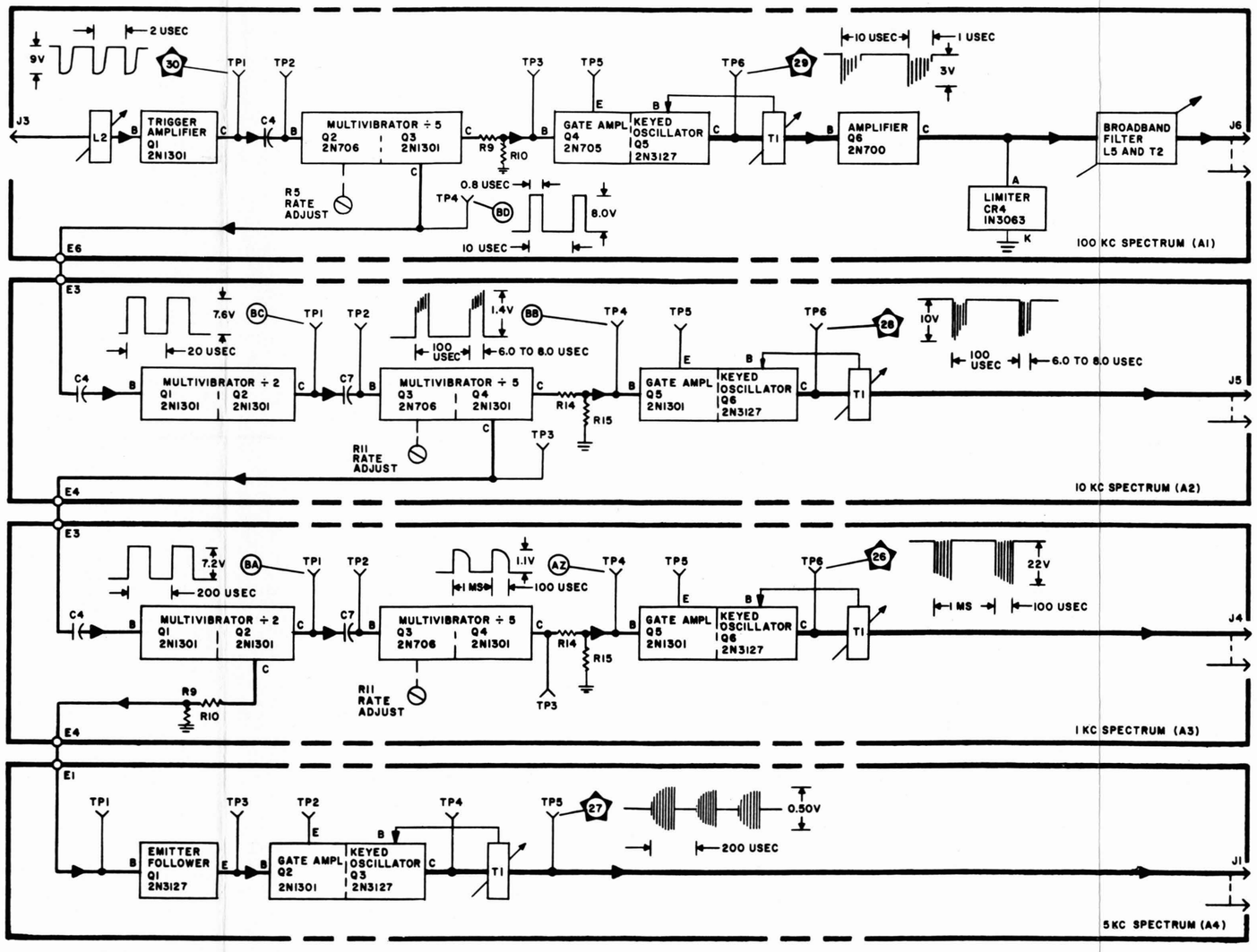

100 KC SPECTRUM (15.3 TO 16.2 MC) TO 100 KC SYNTHESIZER ELECTRONIC SUBASSEMBLY (A2A6A2)

10 KC SPECTRUM (3.82 TO 3.91 MC) TO 1 AND 10 KC SYNTHESIZER ELECTRONIC SUBASSEMBLY (A2A6A3)

1 KC SPECTRUM (0.122 TO 0.131 MC) TO 1 AND 10 KC SYNTHESIZER ELECTRONIC SUBASSEMBLY (A2A6A3)

5 KC SPECTRUM (0.110 TO 0.115 MC) TO 500 CPS SYNTHESIZER ELECTRONIC SUBASSEMBLY (A2A6A4)

NOTES:

1. HEAVY LINES INDICATE MAIN SIGNAL PATHS; LIGHT LINES INDICATE AUXILIARY OR SECONDARY SIGNAL PATHS.
2. LETTERS OUTSIDE TRANSISTOR AND DIODE BLOCKS INDICATE ELEMENTS.
3. WAVEFORMS RECORDED USING OSCILLOSCOPE AN/USM-105A.
4. REF. DESIG. PREFIX A6A5

Figure 4-57. Spectrum Generator Electronic Subassembly, Servicing Block Diagram

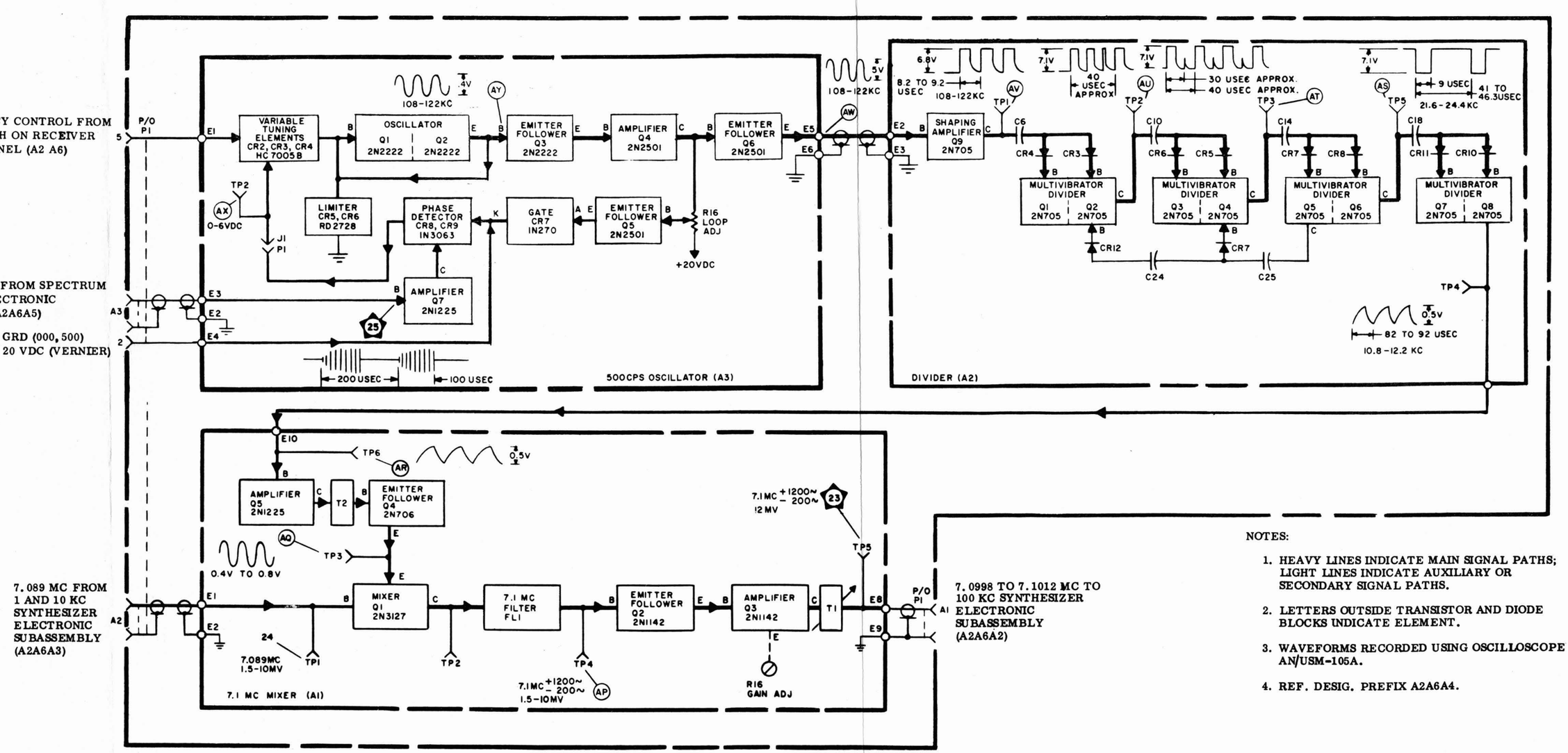

NOTES:

1. HEAVY LINES INDICATE MAIN SIGNAL PATHS; LIGHT LINES INDICATE AUXILIARY OR SECONDARY SIGNAL PATHS.
2. LETTERS OUTSIDE TRANSISTOR AND DIODE BLOCKS INDICATE ELEMENT.
3. WAVEFORMS RECORDED USING OSCILLOSCOPE AN/USM-105A.
4. REF. DESIG. PREFIX A2A6A4.

Figure 4-58. 500 CPS Synthesizer Electronic Subassembly, Servicing Block Diagram

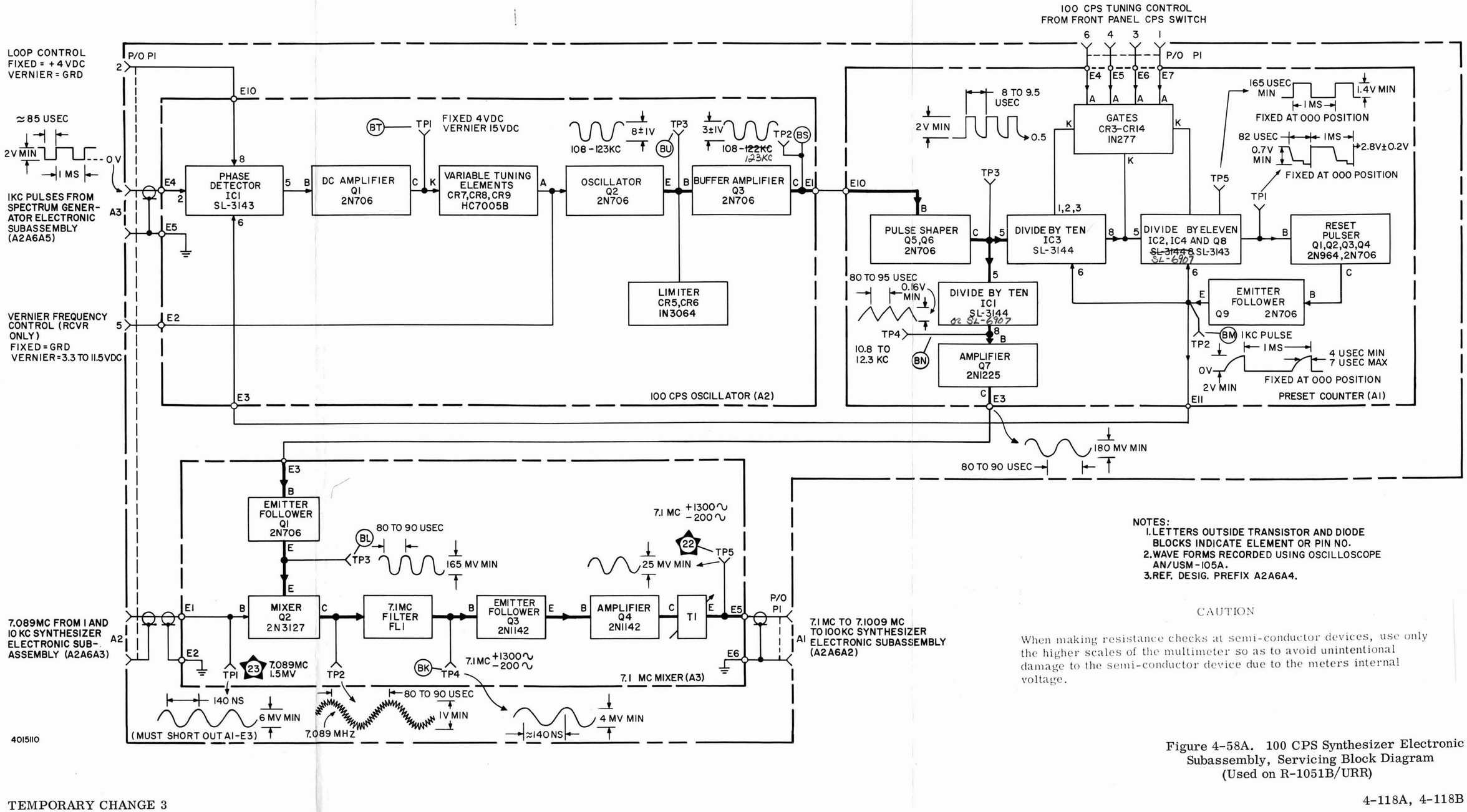

NOTES:
1. LETTERS OUTSIDE TRANSISTOR AND DIODE BLOCKS INDICATE ELEMENT OR PIN NO.
2. WAVE FORMS RECORDED USING OSCILLOSCOPE AN/USM-105A.
3. REF. DESIG. PREFIX A2A6A4.

CAUTION

When making resistance checks at semi-conductor devices, use only the higher scales of the multimeter so as to avoid unintentional damage to the semi-conductor device due to the meters internal voltage.

Figure 4-58A. 100 CPS Synthesizer Electronic Subassembly, Servicing Block Diagram (Used on R-1051B/URR)

CAUTION

When making resistance checks at semi-conductor devices, use only the higher scales of the multimeter so as to avoid unintentional damage to the semi-conductor device due to the meters internal voltage.

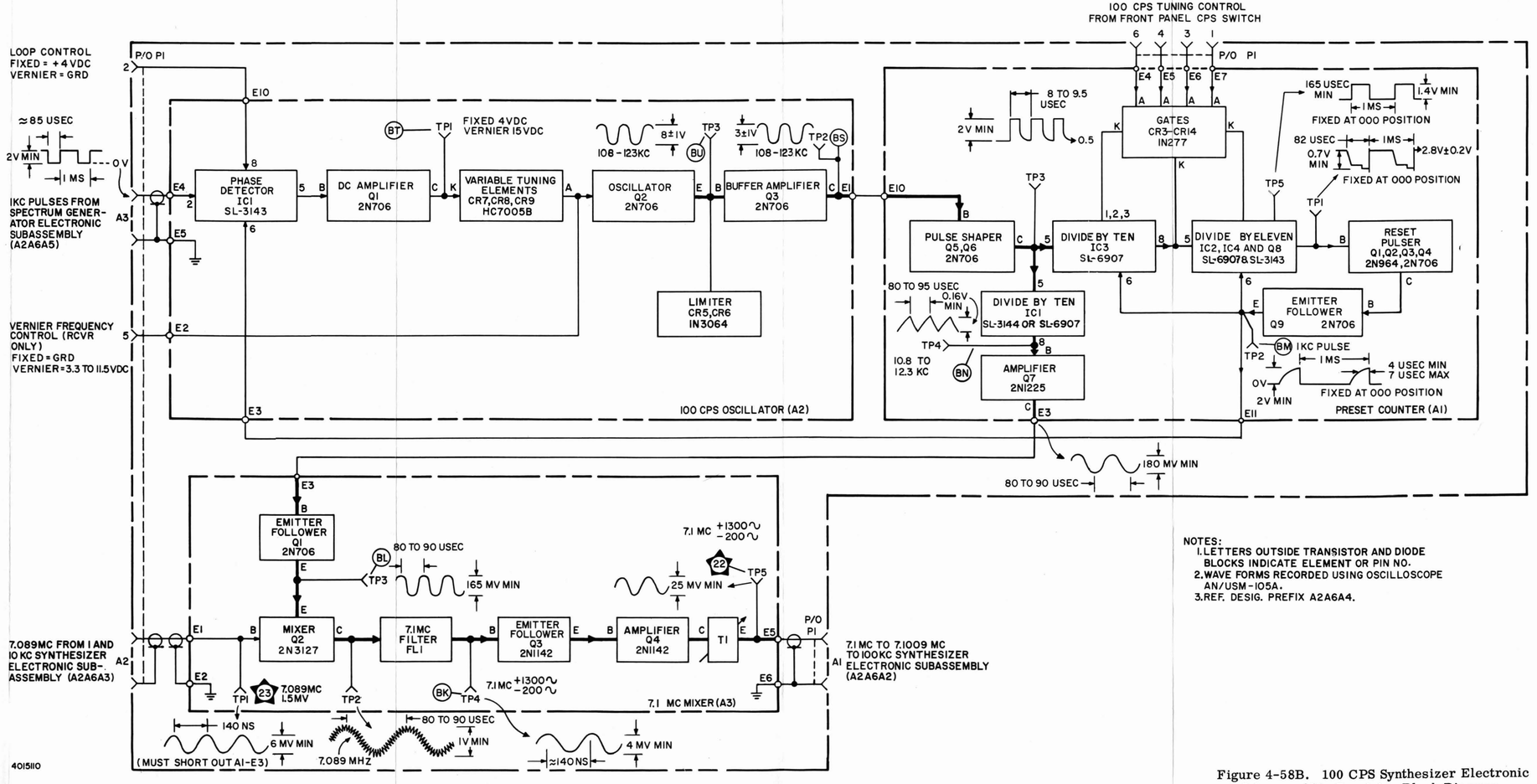

NOTES:
1. LETTERS OUTSIDE TRANSISTOR AND DIODE BLOCKS INDICATE ELEMENT OR PIN NO.
2. WAVE FORMS RECORDED USING OSCILLOSCOPE AN/USM-105A.
3. REF. DESIG. PREFIX A2A6A4.

Figure 4-58B. 100 CPS Synthesizer Electronic Subassembly, Servicing Block Diagram (Used on R-1051B/URR)

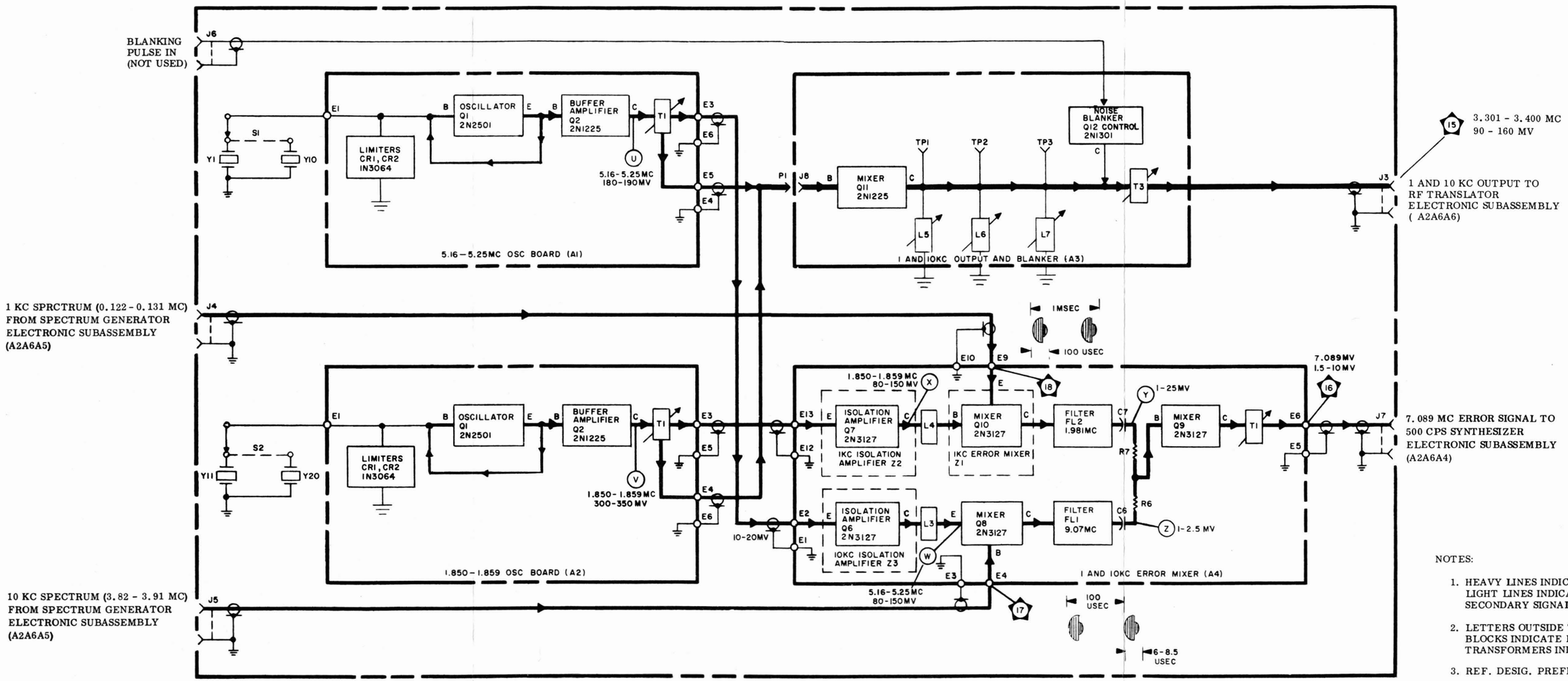

NOTES:

1. HEAVY LINES INDICATE MAIN SIGNAL PATHS; LIGHT LINES INDICATE AUXILIARY OR SECONDARY SIGNAL PATHS.
2. LETTERS OUTSIDE TRANSISTOR AND DIODE BLOCKS INDICATE ELEMENTS. NUMBERS ON TRANSFORMERS INDICATE TERMINAL NUMBERS.
3. REF. DESIG. PREFIX A2A6A3

CAUTION

When making resistance checks at semi-conductor devices, use only the higher scales of the multimeter so as to avoid unintentional damage to the semi-conductor device due to the meters internal voltage.

Figure 4-59. 1 and 10 KC Synthesizer Electronic Subassembly, Servicing Block Diagram

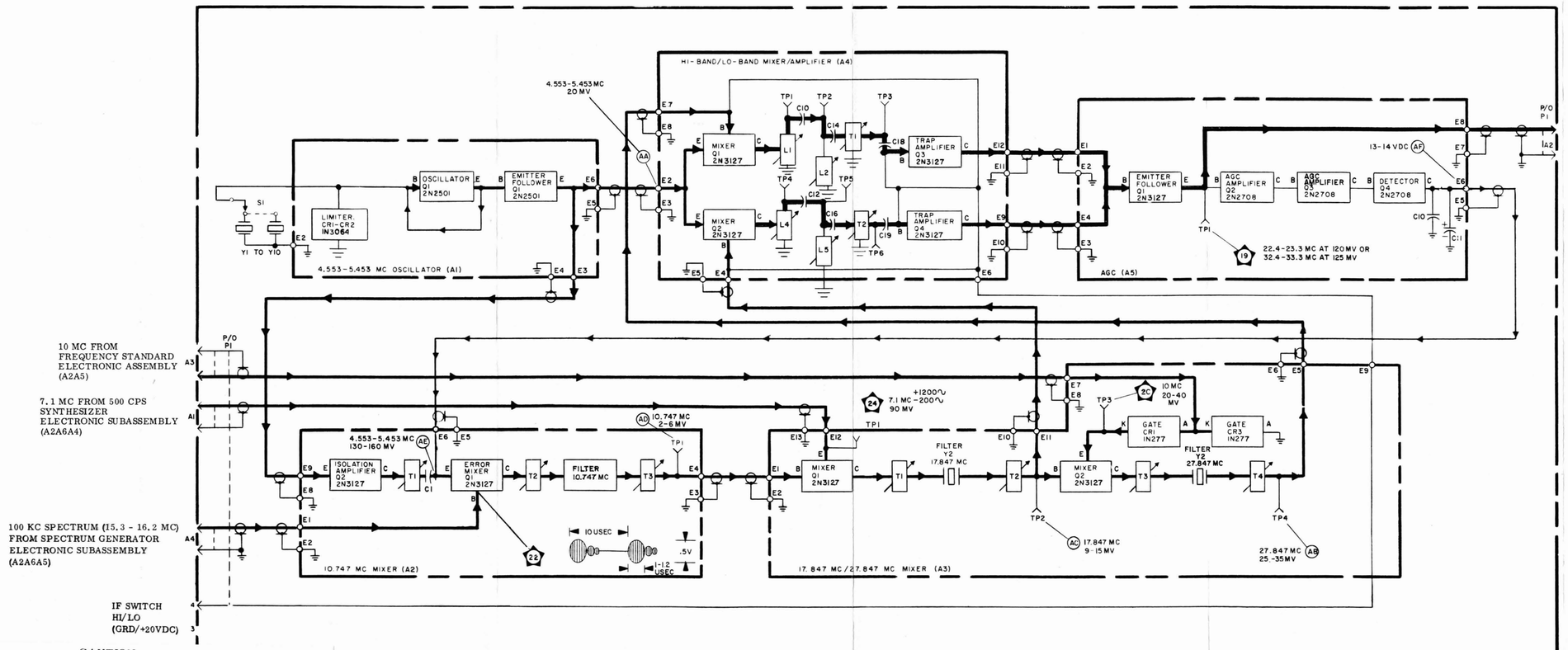

NOTES:

1. HEAVY LINES INDICATE MAIN SIGNAL PATHS; LIGHT LINES INDICATE AUXILIARY OR SECONDARY SIGNAL PATHS.
2. LETTERS OUTSIDE TRANSISTOR AND DIODE BLOCKS INDICATE ELEMENTS.
3. REF. DESIG. PREFIX A2A6A2.

Figure 4-60. 100 KC Synthesizer Electronic Subassembly, Servicing Block Diagram

CAUTION

When making resistance checks at semi-conductor devices, use only the higher scales of the multimeter so as to avoid unintentional damage to the semi-conductor device due to the meters internal voltage.

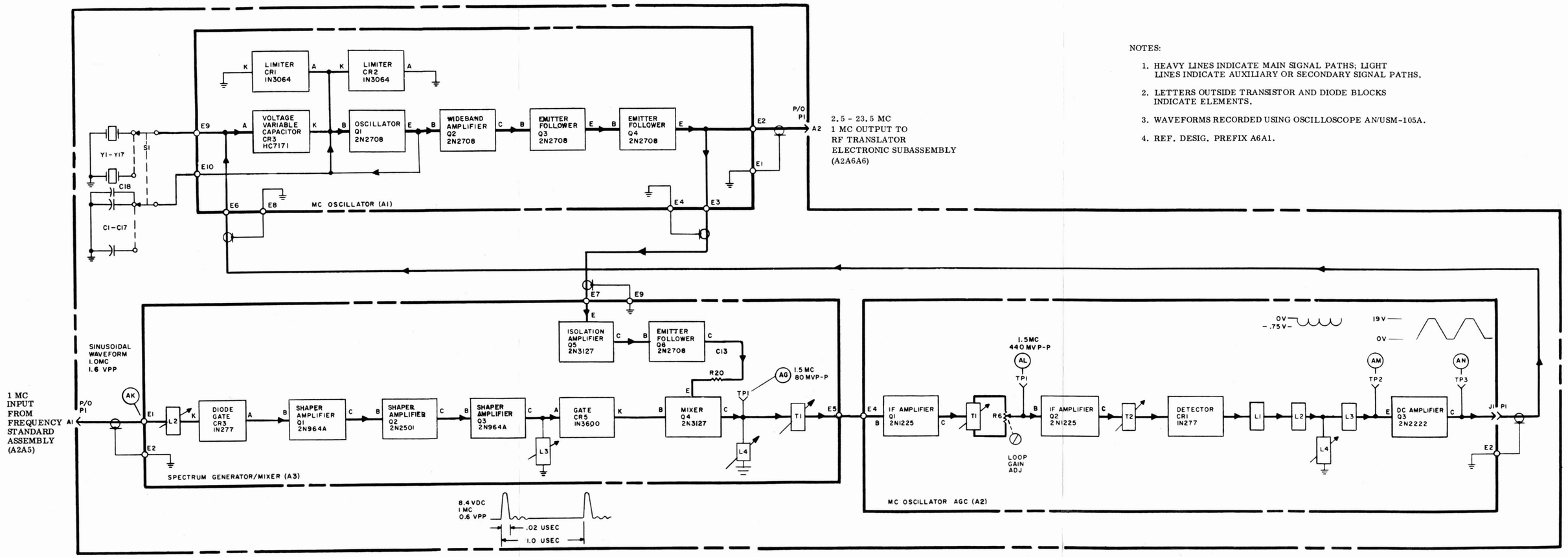

NOTES:

1. HEAVY LINES INDICATE MAIN SIGNAL PATHS; LIGHT LINES INDICATE AUXILIARY OR SECONDARY SIGNAL PATHS.
2. LETTERS OUTSIDE TRANSISTOR AND DIODE BLOCKS INDICATE ELEMENTS.
3. WAVEFORMS RECORDED USING OSCILLOSCOPE AN/USM-105A.
4. REF. DESIG. PREFIX A6A1.

CAUTION

When making resistance checks at semi-conductor devices, use only the higher scales of the multimeter so as to avoid unintentional damage to the semi-conductor device due to the meters internal voltage.

Figure 4-61. 1 MC Synthesizer Electronic Subassembly, Servicing Block Diagram

SECTION 5

MAINTENANCE

5-1. FAILURE, AND PERFORMANCE AND OPERATIONAL REPORTS.

NOTICE

The Bureau of Ships no longer requires the submission of failure reports for all equipments. Failure Reports and Performance and Operational Reports are to be accomplished for designated equipments (refer to Electronics Installation and Maintenance Book, NAVSHIPS 900,000) only to the extent required by existing directives. All failures shall be reported for those equipments requiring the use of Failure Reports.

5-2. PREVENTIVE MAINTENANCE.

5-3. TUNING AND ADJUSTMENT.

5-4. 20-VOLT REGULATOR CIRCUIT ADJUSTMENT. Power Supply Electronic Assembly A2A8 provides a regulated 20-vdc output which must be adjusted if the voltage varies more than ±0.1 volt from 20 vdc.

5-5. Test Equipment. Multimeter AN/PSM-4 is required to perform this adjustment.

5-6. Control Settings. Set the Mode Selector switch (S2) at STD BY prior to the start of the adjustment.

5-7. Test Set-up. Connect the equipment as follows:

a. Loosen the front panel screws and slide the chassis from the case.

b. Pull interlock switch (S8) up and back to defeat the chassis interlock.

c. Tilt the chassis 90 degrees to expose the bottom.

d. Set Multimeter AN/PSM-4 to indicate 40 volts full-scale.

e. Connect the positive lead of multimeter to TP (32) on the bottom of the chassis (figure 5-16).

f. Connect the negative lead of the multimeter to the chassis.

5-8. Instructions. To adjust the 20-volt regulator circuit, proceed as follows:

a. Set the Mode Selector switch (S2) at AM.

b. Observe the multimeter indication and adjust Output Voltage Control A8R14 (figure 5-16) for an indication of 20 ±0.1 vdc.

c. Set Mode Selector switch (S2) at OFF. Tilt the chassis back to horizontal. Slide the chassis into the case and tighten the front panel screws.

5-9. 5 MC OSCILLATOR CIRCUIT ADJUSTMENT. The 5 mc oscillator circuit in Frequency Standard Electronic Assembly A2A5 must be adjusted properly to insure accurate development of frequencies in the receiver. However, the adjustment must not be made until it has been determined that the 5 mc output frequency is in error. Unnecessary adjustment will cause poor equipment operation that is not only difficult to correct, but requires lenghtly maintenance time.

5-10. Test Equipment. Frequency Standard AN/URQ-9 is required to perform this adjustment.

5-11. Control Settings. Set the Mode Selector switch at STD BY. Allow at least a 4-hour warm-up period before proceeding with the adjustment.

5-12. Test Set-up. Connect the equipment as follows:

a. Connect the 5 MC OUTPUT jack on Frequency Standard AN/URQ-9 to the EXT 5 MC IN jack (J25) on the rear of the receiver.

b. Loosen the front panel screws on the receiver and slide the chassis out from the case. Pull interlock switch (S8) up and back to defeat the chassis interlock.

5-13. Instructions. To adjust the 5 mc oscillator circuit, proceed as follows:

a. Using a small screwdriver, rotate the EXT/INT/COMP switch (S1) on top of the Frequency Standard Electronic Assembly to COMP.

b. Observe indicator lamp DS1 on top of the electronic assembly. The indicator lamp will change in brilliance but not flicker if the 5-mc oscillator circuit is adjusted properly; proceed to step (f). If the circuit is improperly adjusted, the indicator lamp will flicker at a rate equal to the rate of error. Make the adjustment only if the lamp flickers. Proceed to step c.

c. If the adjustment is required, remove the dust cover from the electronic assembly.

d. Adjust capacitor C1 on top of the electronic assembly until the indicator lamp remains lighted but changes brilliance.

e. Replace the dust cover.

f. Rotate the EXT/INT/COMP switch (S1) to INT. Set the Mode Selector switch (S2) at OFF. Slide the chassis into the case and tighten the front panel screws.

g. Disconnect Frequency Standard AN/URQ-9.

5-13A. Instructions. To adjust the 5 mc circuit used in the R-1051B/URR receiver, proceed as follows:

a. Using a small screwdriver, rotate the EXT/INT/COMP switch (~~S301~~) on top of the Frequency Standard Electronic Assembly to COMP. S1

b. Observe indicator lamp DS1 on top of the electronic assembly. The indicator lamp will be out if the 5 mc oscillator circuit is adjusted properly: proceed to step f. If the circuit is improperly adjusted the indicator lamp will flicker at a rate equal to the rate of error. Make adjustment only if the lamp flickers. Proceed to step c.

c. If adjustment is required, adjust capacitor ~~C102~~ on top of the electronic assembly until the indicator lamp flickers only occasionally or goes out. C2

S1 d. Rotate the EXT/INT/COMP switch (~~S301~~) to INT. Set the mode selector switch (S2) at OFF. Slide the chassis into the case and tighten the front panel screws.

g. Disconnect Frequency Standard AN/URQ-9.

5-14. 500 CPS OSCILLATOR ADJUSTMENT. The 500 cps oscillator circuit in 500 CPS Synthesizer Electronic Subassembly A2A6A4 is adjusted to lock at a frequency of 110 kc or 115 kc with the CPS switch (S6) at the 000 or 500 positions respectively. An additional adjustment must be made with the CPS switch (S6) in the VERNIER position, so that the oscillator frequency will vary between 108 kc and 122 kc, as the VERNIER control (R7) is rotated from extremely counterclockwise to extremely clockwise.

5-15. Test Equipment. The following test equipment is required to perform this adjustment.

a. Oscilloscope, AN/USM-105A.

b. Frequency Meter, CAQI-524D.

5-16. Control Settings. Set the receiver Mode Selector switch (S2) at USB and the CPS switch (S6) at 000.

5-17. Test Set-up. Connect the equipment as follows:

a. Loosen the front panel screws and slide the chassis from the case.

b. Pull interlock switch (S8) up and back to defeat the chassis interlock.

Note

Voltage-calibrate the oscilloscope.

c. Connect Oscilloscope AN/USM-105A probe to TP2 on the 500 CPS Synthesizer Electronic Subassembly.

5-18. Instructions. To adjust the 500 cps

oscillator circuit, proceed as follows:

a. Set the oscilloscope control as follows:

(1) sweep speed: 5 usec/cm.

(2) vertical deflection: 1 v/cm.

(3) trigger: internal.

(4) type input: DC.

b. A dc voltage level of 2.3 to 2.6 volts should be present on the oscilloscope, with no ac voltage waveform component. If not, adjust the 500 CPS LOCK ADJ (A11R3) located at the top-front of the receiver chassis (figure 5-14), until an ac voltage waveform appears on the oscilloscope. Continue to rotate A11R3 until the frequency of the ac voltage waveform decreases to a point where it snaps into a dc level of 5 to 6 volts. Continue to adjust A11R3 until the dc level decreases to 2.5 volts.

c. Set the CPS switch (S6) at 500. A dc level of 2.3 to 3.1 volts should be present on the oscilloscope. If not, alternate the CPS switch (S6) between the 000 and 500 positions, and adjust A11R3 so that the dc level is 2.3 to 2.6 volts in the 000 position, and 2.3 to 3.1 volts in the 500 position.

d. Connect the frequency meter to TP4 on the 500 CPS Synthesizer Electronic Subassembly. If the signal at TP4 is not sufficient to drive the frequency meter, connect an ME-6( )/U between the frequency meter and TP4.

e. Set CPS switch (S6) at VERNIER. Rotate the VERNIER control (R7) fully clockwise and then fully counterclockwise, and check that it rotates an equal amount past the 000 and 500 positions. Then rotate the VERNIER control (R7) to 000. Adjust the VERNIER FREQ ADJ (A11R1), located next to A11R3, for an indication of 11.000 kc ±30 cps on the frequency meter.

f. Rotate the VERNIER control (R7) fully clockwise. The frequency meter should indicate 12.000 kc.

Note

The frequency cannot be adjusted in the fully-clockwise position of the VERNIER control (R7). If the frequency is not as specified in step f., above, maintenance is required.

g. Set the CPS switch (S6) at 000. Set the Mode Selector switch (S2) at OFF. Disconnect the test equipment. Slide the chassis into the case and tighten the front panel screws.

5-18A. 100 CPS LOCK ADJUSTMENT.

5-18B. A lock adjustment is required in order to establish the proper dc level at which the phase lock portion of the 100-cps oscillator (A2A6A4A2) will operate. The 100-cps oscillator is part of 100 CPS Synthesizer Electronic Subassembly A2A6A4.

5-18C. Test Equipment. The following test equipment is required to make the 100-cps lock adjustment.

a. Oscilloscope AN/USM-105A.

b. Frequency Counter CAQI-524D.

c. Electronic Multimeter AN/USM-116.

5-18D. Control Settings. Set the R-1051B/URR front panel controls as follows:

a. Mode Selector switch (S2): USB.

b. Operating Frequency: 0.2100 mc.

c. CPS switch: 900.

d. LOCAL/REMOTE switch: LOCAL.

5-18E. Instructions. Perform the 100-cps lock adjustment as follows:

a. Loosen front panel screws on R-1051B/URR and slide chassis out from case. Check that the interlock switch (S8) is pulled up.

b. Connect the Frequency Counter CAQI-524D input to vertical output of Oscilloscope AN/USM-105A.

c. Connect oscilloscope probe to test point A2A6A4A1TP1 (figure 5-94D).

d. Apply main power to equipment.

e. Frequency counter display should read 119.0 kc.

f. Connect Multimeter AN/USM-116 between ground and test point A2A6A4A2TP1 (figure 5-94C). The voltmeter should read 8.0 ±0.1 vdc. If necessary, change value of capacitor A2A6A4A2C14 of the 100-cps oscillator to obtain the required dc level.

g. Set CPS switch on the front panel of R-1051B/URR to the 000 position. The counter should read 110.0 kc and the voltmeter should read 4.3 ±0.20 vdc.

h. Set CPS switch to 500 position. The counter should read 115.0 kc and the voltmeter should read approximately 6.5 vdc.

i. Set CPS switch (S6) at VERNIER. Rotate the VERNIER control (R7) fully counterclockwise. Connect oscilloscope probe to test point A2A6A4A1TP4 (figure 5-94D). Adjust VERNIER FREQ ADJ (A11R2) for an indication of 10.800 kc ±30 cps on the frequency counter.

j. Rotate the VERNIER control (R7) fully clockwise. The frequency meter indication should be 12.200 kc ±30 cps.

k. Set the Mode Selector switch (S2) at OFF. Disconnect the test equipment. Slide the chassis into the case and tighten the front panel screws on the R-1051B/URR.

5-19. BFO CIRCUIT ADJUSTMENT. The BFO circuit in Mode Selector Electronic Assembly between 496.5 and 503.5 kc, depending upon the setting of the BFO FREQ control (R6) on the receiver front panel.

5-20. Test Equipment. Frequency Meter CAQI-524D is required to perform this adjustment.

5-21. Control Settings. Set the Mode

Selector switch (S2) at CW.

5-22. Test Set-up. Connect the equipment as follows:

a. Loosen the front panel screws and slide the chassis from the case.

b. Pull interlock switch (S8) up and back to defeat the chassis interlock.

c. Connect the input of Frequency Meter CAQI-S24D to TP2 on the Mode Selector Electronic Assembly (figure 5-14).

5-23. Instructions. To adjust the BFO circuit, proceed as follows:

a. Rotate the BFO FREQ control (R6) fully counterclockwise and note the frequency meter indication.

b. Rotate the BFO FREQ control (R6) fully clockwise and note the frequency meter indication. Adjust the BFO ADJ inductor (L1) so that the frequency is 496.500 kc $^{+500\ cps}_{-1000\ cps}$ with the BFO FREQ control (R6) in the extreme counterclockwise position, and 503.5 kc $^{+1000\ cps}_{-500\ cps}$ with the BFO FREQ control (R6) in the extreme clockwise position.

c. Set the Mode Selector switch (S2) at OFF. Disconnect the frequency meter from TP2. Slide the chassis into the case and tighten the front panel screws.

5-24. RECEIVER USB AGC CIRCUIT ADJUSTMENT. The agc circuit in Receiver IF./Audio Amplifier Electronic Assembly A2A2 is adjusted so that the proper agc voltage is developed with respect to the level of the received upper sideband input signals.

5-25. Test Equipment. The following test equipment is required to adjust the agc voltage.

a. RF Signal Generator, CAQI-606A.

b. Electronic Multimeter, ME-6( )/U.

c. Multimeter, AN/PSM-4.

d. Electronic Multimeter, CCVO-91CA, with 50-ohm adapter.

e. Cable Assembly, W1.

5-26. Control Settings. Before adjusting the agc voltage, set the receiver front panel controls as follows:

a. Mode Selector switch (S2): USB.

b. RF GAIN control (R3): fully clockwise.

c. USB LINE LEVEL switch (S2): +20DB.

d. USB LINE LEVEL control (R2, R12): mid-range.

e. Operating Frequency: 26.500 mc.

f. CPS switch (S6): 000.

5-27. Test Set-up. Connect the equipment as follows:

a. Loosen the front panel screws and slide the chassis from the case. Pull interlock switch (S8) up and back to defeat the chassis interlock.

b. Loosen two corner fastening screws on Receiver IF/Audio Amplifier Electronic Assembly A2A2 and lift it out from chassis.

c. Connect cable assembly W1 to P4 on the bottom of the electronic assembly.

d. Connect cable assembly W1 to J18 on the receiver chassis in place of the electronic assembly.

e. Connect RF Signal Generator CAQI-606A to J23 on the rear of the receiver.

f. Connect Electronic Multimeter ME-6( )/U to J5 on the rear of the receiver.

g. Connect multimeter AN/PSM-4 to TP 6 on the electronic assembly (figure 5-28).

5-28. Instructions. To adjust the agc circuit, proceed as follows:

a. Set the rf signal generator as follows:

(1) Frequency: 26.501 mc

(2) Output Level: 1 uv.

(3) Modulation: CW.

(4) Modulation amplitude: zero.

b. Set the electronic multimeter to indicate 10 volts full-scale. Set the multimeter to indicate 1 volt full-scale.

c. Tune the rf signal generator for a peak indication on the electronic multimeter.

d. Adjust the IF. AGC potentiometer (R25) (figure 5-28) for an indication slightly above 0 volt on the multimeter.

e. Adjust the IF. GAIN potentiometer (R22) for a 5.5 ±0.5v indication on the electronic multimeter.

f. Connect Electronic Multimeter CCVO-91CA with 50-ohm adapter to TP 13 on the Translator/Synthesizer Electronic Assembly (figure 5-14). Set electronic multimeter to indicate 0.3 volts full-scale.

g. Increase the rf signal generator output level to 150,000 uv. Tune the signal generator for a peak indication on both Electronic Multimeter ME-6( )/U and the multimeter.

Note

If a peak indication is observed on Electronic Multimeter ME-6( )/U and not on the multimeter, the rf signal generator is not tuned properly. The electronic multimeter indication may decrease slightly from the peak as a peak is obtained on the multimeter.

h. Adjust the RF AGC potentiometer (R6) (figure 5-28) on the electronic assembly for a 6-mv indication on Electronic Multimeter CCVO-91CA.

i. Disconnect the test equipment. Set the Mode Selector switch (S2) at OFF. Replace the dust cover on the electronic assembly and plug assembly back into the chassis. Tighten the two corner fastening screws. Slide the chassis into the case and tighten the front panel screws.

5-29. RECEIVER LSB AGC CIRCUIT ADJUSTMENT. The agc circuit in Receiver IF./Audio Amplifier Electronic Assembly A2A3 is adjusted in the same manner as that in the Receiver IF./Audio Amplifier Electronic Assembly A2A2. The differences in control settings, test connections and adjustment controls are specified in the following paragraphs.

5-30. Test Equipment. Same as paragraph 5-25.

5-31. Control Settings. Set the receiver controls as follows;

a. Mode Selector switch (S2): LSB.

b. LSB LINE LEVEL switch (S1): +20DB.

c. LSB LINE LEVEL control (R1, R11): mid-range.

5-32. Test Set-up. The test set-up is the same as paragraph 5-27, except that Electronic Multimeter ME-6( )/U is connected to J6 on rear of receiver.

5-33. Instructions. The procedure for adjusting the agc circuit is the same as in paragraph 5-28, except that the measurements and adjustments are made on Receiver IF./Audio Amplifier Electronic Assembly (A2A3) and the rf signal generator should initially be set to 26.499 mc.

5-34. SHIPBOARD REPAIR.

5-35. GENERAL REPAIR INSTRUCTIONS.

5-36. The instructions in this portion of the maintenance section provide repair and adjustment instructions for Receiver IF./Audio Amplifier Electronic Assemblies A2A2 and A2A3 and Mode Selector Electronic Assembly A2A1. RF Amplifier Electronic Assembly A2A4, Frequency Standard Electronic Assembly A2A5 and Translator/Synthesizer Electronic Assembly A2A6 are not repaired aboard ship. They are therefore considered non-repairable assemblies at this level.

5-37. NON-REPAIRABLE ELECTRONIC ASSEMBLIES.

5-38. RF AMPLIFIER ELECTRONIC ASSEMBLY A2A4. The RF Amplifier Electronic Assembly is replaced with a spare electronic assembly aboard ship. To replace a defective electronic assembly, proceed as follows:

a. Turn off power to the receiver.

b. Set the KCS controls for 111.

c. Loosen the four fastening screws at the corners of the RF Amplifier Electronic Assembly and lift the electronic assembly from the chassis.

d. Check that the slots in chassis couplers point toward and are perpendicular to the front panel. If not, refer to paragraph 5-68.

e. Set the couplers on the bottom of the new RF Amplifier Electronic Assembly at position 1. Place the spare RF Amplifier Electronic Assembly into the chassis. Apply a small amount of finger-pressure on the electronic assembly. Rotate the 100 kc (KCS) and 10 kc (KCS) controls to 0, then to 2, and then to 1, while observing the digital tuning rotor assemblies on the turret assembly located inside the electronic assembly. This is done by looking through the tube access slot in top of dust cover. As 100 kc (KCS) control is rotated, the top two wafers (with the vertical posts) should rotate. As the 10 kc (KCS) control is rotated, the lower rotor (with printed circuit visible) should rotate.

f. When it has been determined that the couplers of the electronic assembly are fully engaged with the chassis couplers, tighten the four fastening screws at the corners of the electronic assembly.

5-39. TRANSLATOR/SYNTHESIZER ELECTRONIC ASSEMBLY A2A6. The Translator/Synthesizer Electronic Assembly is also replaced with a spare electronic assembly aboard ship. To replace a defective electronic assembly, proceed as follows:

a. Turn off power.

b. Loosen the four fastening screws at the corners of the Translator/Synthesizer Electronic Assembly.

c. Rotate the KCS controls to 111 and carefully lift out the electronic assembly.

d. Check that slots in couplers point toward and are perpendicular to the rear chassis panel. If not, refer to paragraph 5-68.

e. Rotate the couplers on the bottom of the spare Translator/Synthesizer Electronic Assembly to 1. Carefully place the new electronic assembly into the receiver chassis.

f. Apply slight finger-pressure on top of the electronic assembly and rotate the KCS controls to 9 and back to 0. When it has been determined that the couplers on the bottom of the electronic assembly are fully engaged with the chassis couplers, tighten the four fastening screws in the corners of the electronic assembly.

5-40. FREQUENCY STANDARD ELECTRONIC ASSEMBLY A2A5. The Frequency Standard Electronic Assembly is also a non-repairable electronic assembly aboard ship. To replace a defective electronic assembly, loosen the two corner fastening screws on top of the electronic assembly and lift it from the chassis. Place the spare electronic assembly into the chassis and tighten the fastening screws.

5-41. REPAIRABLE ELECTRONIC ASSEMBLIES.

Note

The variable transformers in the electronic assemblies are glued in the factory after adjustment. In repairing the electronic assemblies, it may be necessary to break the glue seal, or to put in a new transformer that is not glued. In either case, apply a small amount of Glyptal to the transformer after adjustment.

5-42. RECEIVER IF./AUDIO AMPLIFIER ELECTRONIC ASSEMBLIES. The following paragraphs provide instructions for removal, cleaning, repair and adjustment of the Receiver IF./Audio Amplifier Electronic Assemblies.

5-43. Removal. Receiver IF./Audio Amplifier Electronic Assemblies A2A2 and A2A3 are located side-by-side at the rear of the receiver chassis (figure 5-14). They operate identically and are interchangeable. To remove either electronic assembly, loosen the two corner fastening screws on top of the electronic assembly and lift it from the chassis. Remove the two dust cover screws and lift the dust cover off from the electronic assembly.

5-44. Test Equipment. The following test equipment is required to adjust the Receiver IF./Audio Amplifier Electronic Assembly after repair:

a. RF Signal Generator, CAQI-606A.

b. Electronic Multimeter, ME-6 ( )/U.

c. Multimeter, AN/PSM-4.

d. Cable Assembly, W1.

e. 600-ohm, 2-watt, carbon resistor.

5-45. Repair. Clean the electronic assembly of dust and other foreign matter with compressed air. Inspect the entire electronic assembly for defective electrical components, frayed wiring, or loose connections or connectors. The only parts or components to be replaced are electrical components. See figures 5-27 and through 5-31 for component location.

5-46. Reassembly. After repair, replace any component board that may have been removed for repair or replacement of parts.

5-47. Adjustments. If electrical components were replaced in the electronic assembly, adjust the electronic assembly as follows:

a. Plug cable assembly W1 into P4 on the bottom of the electronic assembly (figure 5-3).

b. Plug cable assembly W1 into J18 on the receiver chassis.

c. Set the receiver controls as follows:

(1) Interlock switch (S8): pulled up.

(2) Mode Selector switch (S2): AM.

(3) Operating frequency: 06.000 mc.

(4) RF GAIN control (R3): fully clockwise.

(5) CPS switch (S6): 000.

(6) USB LINE LEVEL switch (S5): +20DB.

(7) USB LINE LEVEL control (R2, R12): mid-range.

d. Connect RF Signal Generator CAQI-606A to J23 on rear of receiver. Set rf signal generator as follows:

(1) Frequency: 6.00 mc.

(2) Output level: 1 millivolt.

(3) Modulation: INT 1000 cps.

(4) Modulation amplitude: 30%.

e. Connect Electronic Multimeter ME-6 ( )/U to J5 on rear of receiver. Connect the 600-ohm resistor across the terminals of the electronic multimeter. Set the electronic multimeter to indicate 10 vdc full-scale.

f. Adjust USB LINE LEVEL control (R2, R12) on receiver for a 2-volt indication on the electronic multimeter.

g. Connect the Multimeter AN/PSM-4 to TP (6) (figure 5-28) on the Receiver IF./ Audio Amplifier Electronic Assembly. Set the multimeter to indicate 1 vdc full-scale. Adjust the rf signal generator output level for a 0.3-to-0.45-volt indication on the multimeter.

h. Tune the rf signal generator for peak indication on the electronic multimeter.

Note

The variable transformers in the electronic assembly have very broad bandwidths and sometimes require repeated adjusting to obtain the correct peak.

i. Tune transformers A2T1, A2T2, A2T3 and A2T4 for peak indication on the electronic multimeter. If the indication on the electronic multimeter exceeds 6 volts, rotate the USB LINE LEVEL control (R2, R12) on the receiver in a counterclockwise direction to decrease the indication.

j. Rotate potentiometer R25 (figure 5-28) fully clockwise. Decrease the rf signal generator output level for a 0.2 to 0.3-volt indication on the multimeter. Tune transformers A1T1 and A1T2 for peak indication on the multimeter.

k. Set Mode Selector switch (S2) at AM. Tune inductor A3L1 on electronic assembly (figure 5-29) for peak indication on electronic multimeter.

l. Proceed to paragraph 5-24 to adjust the agc circuits.

5-48. MODE SELECTOR ELECTRONIC ASSEMBLY (A2A1). The following paragraphs provide instructions for removal, cleaning, repair and adjustment of the Mode Selector Electronic Assembly.

5-49. Removal. To remove the Mode Selector Electronic Assembly, located at the left-rear center of the chassis, loosen the two corner fastening screws on top of the electronic assembly and lift it from the chassis. Remove the dust cover screw and lift the dust cover.

5-50. Test Equipment. Frequency Meter CAQI-524D is required to adjust the Mode Selector Electronic Assembly after repair.

5-51. Repair. Clean the electronic assembly of dust and foreign matter with compressed air.

CAUTION

Do not direct the air spray directly on the filters in the electronic assembly. The wires are very thin and the connections will break.

Inspect the entire electronic assembly for defective electrical components, frayed wiring, or loose connections or connectors. See figures 5-22 through 5-26 for component location.

5-52. Reassembly. Replace any connections removed for repair. Replace the dust cover. Place the electronic assembly into the chassis and tighten the two corner fastening screws.

5-53. Adjustments. The only adjustment performed on the electronic assembly is adjustment of the BFO circuit. Refer to paragraph 5-19.

5-54. EMERGENCY MAINTENANCE FOR ELECTRONIC ASSEMBLIES.

5-55. Receiver IF./Audio Amplifier Electronic Assemblies A2A2 and A2A3 function identically and are interchangeable. If it is essential that the receiver be operated in USB, AM, CW, or FSK modes of operation, and Receiver IF./Audio Amplifier Electronic Assembly A2A2 malfunctions, replace it with Receiver IF./Audio Amplifier Electronic Assembly A2A3. If LSB mode of operation is desired and Receiver IF./Audio Amplifier Electronic Assembly A2A3 malfunctions, replace it with Receiver IF./Audio Amplifier Electronic Assembly A2A2. Both electronic assemblies must be functioning properly for ISB mode of operation.

5-56. In addition, RF Amplifier Electronic Assembly A2A4, Translator/Synthesizer Electronic Assembly A2A6, and Frequency Standard Electronic Assembly A2A5 are interchangeable with the same electronic assemblies (2A2A4, 2A2A6, and 2A2A5) in Radio Transmitter T-827/URT. Refer to paragraphs 5-38 through 5-40 for replacing these electronic assemblies.

5-57. If the 5 mc oscillator in the Frequency

Standard Electronic Assembly malfunctions, refer to paragraph 2-19 for patching the 5 mc output of the Frequency Standard in another unit to the R-1051/URR.

5-58. R-1051/URR CHAIN DRIVE MECHANISM.

5-59. REMOVAL.

5-60. This paragraph provides instructions for removing the drive chains and for removing and disassembling the sprocket assemblies on the bottom of the R-1051/URR chassis. Removal of these components can be accomplished with the chassis in place on the slide mechanisms. To remove the drive chains and sprocket assemblies, proceed as follows, using figure 5-16 as a guide:

a. Turn off power to R-1051/URR. Loosen front panel screws and slide chassis out from case.

b. Remove RF Amplifier and Translator/ Synthesizer Electronic Assemblies from chassis.

c. Tilt chassis 90 degrees to expose bottom.

d. To remove drive chains, proceed as follows:

(1) Loosen the three chain tension idler gears and slide away from chains.

(2) Locate keeper clip on each drive chain. Carefully remove keeper clips and unthread chains.

e. Remove four nuts securing dual and triple sprocket assemblies to chassis and lift off sprocket assemblies.

f. To disassemble the sprocket assemblies, remove the two retaining rings located inside the assembly housing and secured around shaft. Loosen coupler hub-clamp set screw and punch out shaft from end opposite coupler. Separate sprocket assembly parts as they clear shaft.

5-61. REPAIR.

5-62. To repair a defective sprocket assembly, proceed as follows:

a. Wipe all disassembled parts with dry, lint-free cloth.

b. Inspect all parts for damage. Replace worn parts.

c. Replace metal springs if they no longer provide proper tension between associated parts.

d. Replace both coupler and shaft if shaft is scored.

e. Replace detent springs if bent so that too much or too little tension results.

f. Replace hub-clamp if it is evident during equipment operation that proper clamping action was not being maintained.

5-63. REASSEMBLY.

5-64. To reassemble the sprocket assemblies, and to install the sprocket assemblies and drive chains onto bottom of chassis after repair, proceed as follows:

a. Reassemble sprocket assemblies using new retaining rings in place of those that were removed. Do not tighten hub-clamp setscrews.

b. Secure sprocket assemblies in their respective positions on chassis with the four appropriate nuts.

c. Thread drive chains onto gears. Fasten ends of each chain together with keeper clip.

5-65. ADJUSTMENTS.

5-66. After reassembly, the chain drive mechanism must be adjusted to assure proper relationship between the front panel KCS controls, the couplers and their respective detent spring position in the sprocket assemblies.

5-67. DRIVE CHAIN ADJUSTMENT. - To obtain proper positioning of the front panel KCS controls with respect to the full or "seated" position of the detent spring, adjust the position of the drive chain as follows:

a. Replace RF Amplifier and Translator/ Synthesizer Electronic Assemblies. Make sure that all couplers are engaged properly (refer to paragraphs 5-38 and 5-39).

b. For each KCS control, take slack out of associated drive chain by holding associated chain tension idler gear against chain. If digit

is centered in window, tighten chain tension idler gear in that position and proceed to paragraph 5-68. If digit is not centered in window, proceed as follows:

(1) Release chain tension idler gear and slide away from chain.

(2) Lift drive chain away from gears and shift entire chain to a position where front panel control and digit above control, remain fairly stationary when chain is tightened. In most cases, the trial-and-error method must be used to determine the proper chain position.

(3) When the drive chain is positioned properly, tighten chain tension idler gear securely against chain.

c. The dual sprocket assembly provides a means for making a finer adjustment for the 100 kc (KCS) and 10 kc (KCS) controls. To make the fine adjustment, proceed as follows:

(1) Rotate the 100 kc (KCS) and 10 kc (KCS) controls and observe the detent action of the dual sprocket assembly. Proper detent action is displayed by relatively smooth rotation of controls with full detent or "seating" action. If necessary, remove a spacer from under detent spring to increase the spring tension or add a spacer to reduce spring tension.

(2) If digit is still not centered fully in window when detent spring is "seated" fully, loosen the two hex-head screws on wheel index engaged with detent spring. Wheel index provides the "seating" position for the detent spring.

(3) Press firmly on detent spring above roller. Do not allow wheel index to rotate.

(4) Rotate front panel control until digit is exactly centered in window as desired.

(5) Release front panel control and detent spring. If digit moves from center of window, repeat steps (3) through (5). When digit is centered exactly in window, tighten hex-head screws on wheel index.

5-68. COUPLER ADJUSTMENT. Once the drive chains have been adjusted to provide optimum detent positioning, the sprocket assembly couplers which are operated by the KCS controls, must be adjusted for proper electrical-mechanical alignment between the electronic assemblies and the chain drive mechanism. To adjust the couplers, proceed as follows:

a. Remove RF Amplifier and Translator/Synthesizer Electronic Assemblies from chassis.

b. Rotate 100 kc (KCS) and 10 kc (KCS) controls to 1. Insert screw-driver in coupler adjustments in dual sprocket assembly (figure 5-16) and rotate couplers so that in each coupler points toward and is perpendicular to the front panel.

c. Tighten hub-clamp setscrews on dual sprocket assembly.

d. Rotate 100 kc (KCS), 10 kc (KCS) and 1 kc (KCS) controls to 0. Insert screwdriver in respective coupler adjustments in triple sprocket assembly (figure 5-16) and rotate couplers so that each coupler slot points toward and is perpendicular to the rear panel.

e. Tighten hub-clamp setscrews on triple sprocket assembly.

f. Rotate KCS controls to 1. Replace RF Amplifier and Translator/Synthesizer Electronic Assemblies. Restore R-1051/URR to normal operating condition.

5-69. DEPOT REPAIR.

5-70. Instructions for repair of RF Amplifier Electronic Assembly A2A4, Translator/Synthesizer Electronic Assembly A2A6 and Frequency Standard Electronic Assembly A2A5 are contained in Technical Manual for Repair of AN/WRC-1 and R1051/URR 2N Modules, NAVSHIPS 95700. Normally, repair and alignment of the above electronic assemblies is accomplished by established module repair facilities.

TABLE 5-1. RADIO RECEIVER R-1051/URR SPARE CONNECTOR PINS AND SPARE FILTERS

SPARE CONNECTOR PINS			
A2J10 - A2A4P1	A2J16 - A2A1P1	A2J13 - A2A6P2	A2J19 - A2A3P4
-10	-3	-A3	-5
-11	-4	A2J12 - A2A6P1	-8
-12	-5	-9	-10
-13	-8	-11	-16
-14	-9	-13	A1P21 - A2J21
-15	-10	-15	-16
A2J11 - A2A4P2	A2J18 - A2A2P4	-17	-29
-3	-5	-22	-30
-4	-8	A2J9 - A2A5P1	-39
-5	-10	-4	
-6	-16	-5	
		-6	
		-7	

SPARE FILTERS					
A1A1J4	FILTER CAP.	A1P21 - A2J21	A1A1J4	FILTER CAP.	A1P21 - A2J21
-A	C9	-9	-D	D2	-2
-B	C3	-3	-E	C1	-1
-C	C4	-4	-F	C26	-26

PARTS LOCATION INDEX

REF. DESIG.	LOC.	REF. DESIG.	LOC.	REF. DESIG.	LOC.	REF. DESIG.	LOC.	REF. DESIG.	LOC.	REF. DESIG.	LOC.
A1J23	14B	FL1	20H	M1	35G	A3P1	11E, 12E,	A6P9	28B	A8R1	9C
A1J24	34I	FL2	18H	M2	35B		32F, 33G,	A6P10	26B	A8R2	10C
A1J25	14H	J1	34E	Q1	7E		34E, 34F	A6P11	26B	A8R3	8D
A1P21	3B, 3C, 3D, 3E, 3F, 16A, 16I, 36A, 36B, 36C, 36D, 36E, 36F	J2	34D	R1	32F	A4P1	22A, 23B	A6P12	27B	A8R4	9D
		J8	19E, 19F, 20E, 21E	R2	32C	A4P2	24A, 24B	A6P13	26B	A8R5	8E
				R3	11F		22A, 23A,	A6P14	26F	A8R6	11E
		J9	20G, 21F, 22G	R4	35E	A5P1	20G, 21G, 22G	A6P15	26F	A8R7	8E
A1P22	15B, 15H, 34I	J10	22B, 23B	R5	34B	A6A1P1	25C, 26C	A6P16	27E	A8R8	9D
A1A1C5	3B	J11	22A, 24A,	R6	30E	A6A2P1	27D, 27E,	A6P17	26E	A8R9	9E
A1A1C6	16I		24B, 23B	R7	25H		28D, 28E	A6P18	26E	A8R10	9D
A1A1C7	36E	J12	23F, 24C,	R8	11C	A6A3J1	26E	A6P19	26E	A8R11	9D
A1A1C8	16I		24D, 25B,	R9	34D	A6A3J3	26E	A6P21	24F	A8R12	9F
A1A1C10	16A		27G, 28G,	R10	34E	A6A3J4	26E	A6P22	25F	A8R13	10E
A1A1C11	36F		29C, 29D	R11	32G	A6A3J5	26E	A6P23	25E	A8R14	10E
A1A1C12	36F	J13	25B, 29A	R12	32C	A6A3J6	27E	A6P24	25E	A8R15	10E
A1A1C13	36D	J14	25A, 29B	R13	34G	A6A3J7	26E	A6P25	25E	A9C1	18B
A1A1C15	36A	J16	29A, 30C,	R15	35G	A6A4P1	27F, 28F	A6P26	24F	A9C2	18B
A1A1C16	36B		31C, 31A,	R16	35B	A6A5J1	25F	A7P8	19E, 20E, 21E	A9C3	18C
A1A1C17	3B		31B	R17	32G	A6A5J2	24F			A9C4	19B
A1A1C18	3C	J17	29C, 30C,	R18	32C	A6A5J3	24F	A7S3	21E	A9C5	20B
A1A1C19	3C		31C	R19	30F	A6A5J4	25E	A7S4	21E	A9CR1	19B
A1A1C21	3D	J18	12F, 13F,	R20	11B	A6A5J5	25E	A8C3	9D	A9K1	20B
A1A1C22	3D		32A, 32B,	S1	34G	A6A5J6	24E	A8C4	10D	A9Q1	20B
A1A1C23	3F		33C, 34A,	S2A (Front)	6D, 33D	A6A6J1	26B	A8C6	10E	A9R1	18B
A1A1C24	3E		34B, 34C	S2A (Rear)	11D, 32E	A6A6J2	27B	A8C7	10D	A9R2	19B
A1A1C25	36C	J19	11F, 12F,	S2B (Front)	5C, 34C,	A6A6J3	26B	A8CR1	8B	A9R3	19B
A1A1J3	2C, 2B		32F, 33G,	S2B (Rear)	31G	A6A6J4	28B	A8CR2	8B	A9R4	20B
A1A1J4	2B, 2D, 2E, 2F, 14A, 14I, 37A, 37B, 37C, 37D, 37E, 37F		34E, 34F	S2C (Front)	12B, 32D	A6A6J5	28B	A8CR3	8B	A9R5	20B
		J21	4B, 4C, 4D, 4E, 4F, 17I, 17A, 36A, 36B, 36C, 36D, 36E, 36F	S2C (Rear)	31E	A6A6J6	27B	A8CR4	8B	A10DS3	11C
				S2D (Front)	12D	A6A6J7	26B	A8CR5	8C	A10DS4	12C
				S2D (Rear)	8G, 31D	A6C1	28C	A8CR6	8C	A11C1	25H
				S5	34B	A6C2	27C	A8CR7	8C	A11R1	25H
				S6 (Front)	27H	A6J4	25C, 25D, 26C, 26D	A8CR8	8C	A11R2	26H
A1A1J5	37B			S6 (Rear)	30H	A6J5	27F, 28F	A8CR9	8C	A11R3	25G
A1A1J6	37F			S7	4D	A6J6	27D, 27E, 28D, 28E	A9CR10	8C	A11R4	26H
C1	11B	J22	16B, 16H, 34I	S8	5D			A8CR11	8D	A11R5	26G
C2	11C			S9	4E, 4F	A6P1	24C, 24D, 24F, 25B, 27G, 28C, 28D, 28G	A8CR12	8D	A11R6	26H
C3	7E	K1	6E	T1	7A, 7B, 7C, 7D			A8CR13	9D	A11R7	25H
CR1	6E							A8CR14	9D		
CR2	18D	K2	19D	A1P1	30A, 30C, 31A, 31B, 31C	A6P2	25B, 28A, 28E	A8CR15	8D		
CR3	5F	K2A	24H					A8CR16	8F		
CR4	18E	K3	5F					A8CR17	9F		
DS1	6D	K3A	23H	A1P2	30C, 31C	A6P3	25A, 28B	A8Q1	8E		
DS2	6B	K3B	22H	A2P1	12E, 13E, 32A, 32B, 33B, 34A, 34B	A6P7	27B	A8Q2	8E		
DS5	24H	L1	10B			A6P8	28B	A8Q3	9E		
P1	6D	L2	10C					A8Q4	9E		
P2	6C										

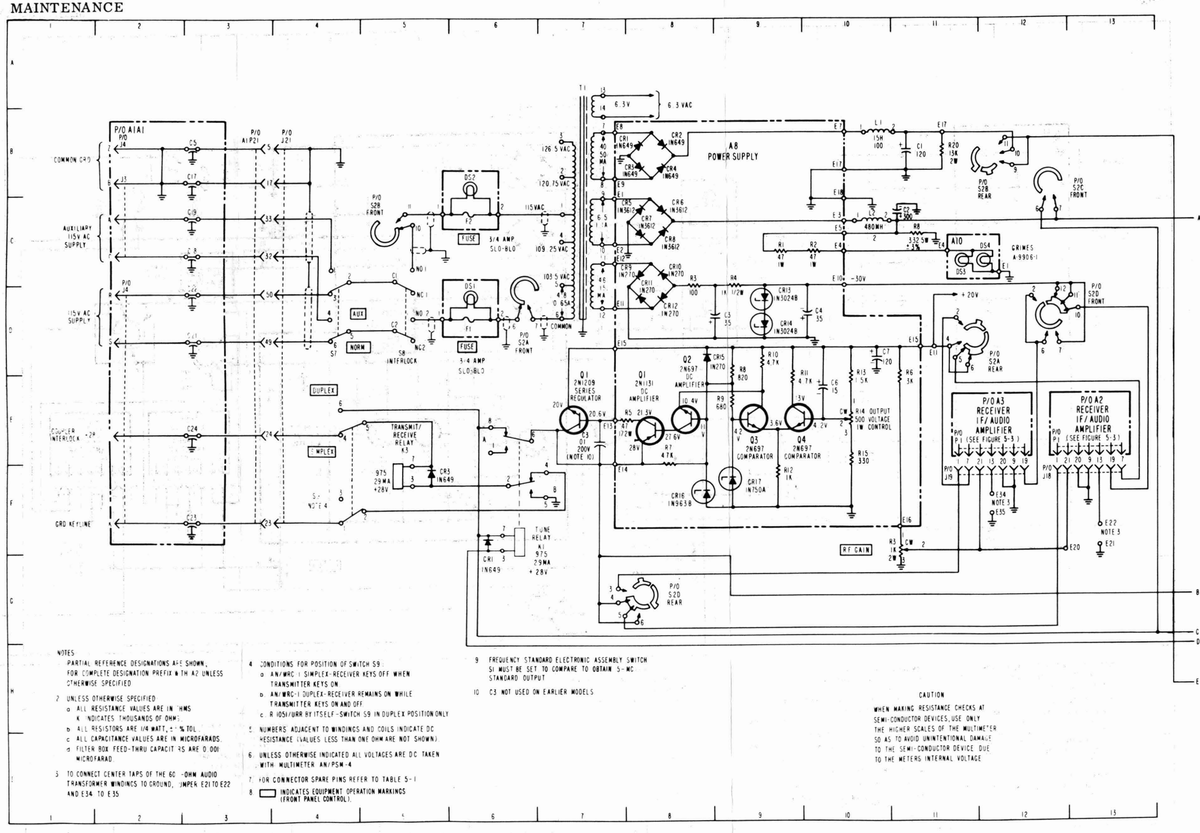

NOTES
1 PARTIAL REFERENCE DESIGNATIONS ARE SHOWN. FOR COMPLETE DESIGNATION PREFIX WITH A1 UNLESS OTHERWISE SPECIFIED
2 UNLESS OTHERWISE SPECIFIED
a. ALL RESISTANCE VALUES ARE IN OHMS
K INDICATES THOUSANDS OF OHMS
b. ALL RESISTORS ARE 1/4 WATT, ± 5% TOL
c. ALL CAPACITANCE VALUES ARE IN MICROFARADS
d. FILTER BOX FEED-THRU CAPACITORS ARE 0.001 MICROFARAD
3 TO CONNECT CENTER TAPS OF THE 600 OHM AUDIO TRANSFORMER WINDINGS TO GROUND, JUMPER E21 TO E22 AND E34 TO E35
4 CONDITIONS FOR POSITION OF SWITCH S9:
a. AN/WRC-1 SIMPLEX-RECEIVER KEYS OFF WHEN TRANSMITTER KEYS ON
b. AN/WRC-1 DUPLEX-RECEIVER REMAINS ON WHILE TRANSMITTER KEYS ON AND OFF
c. R-1051/URR BY ITSELF-SWITCH S9 IN DUPLEX POSITION ONLY
5 NUMBERS ADJACENT TO WINDINGS AND COILS INDICATE DC RESISTANCE (VALUES LESS THAN ONE OHM ARE NOT SHOWN)
6 UNLESS OTHERWISE INDICATED ALL VOLTAGES ARE DC TAKEN WITH MULTIMETER AN/PSM-4
7 FOR CONNECTOR SPARE PINS REFER TO TABLE 5-1
8 INDICATES EQUIPMENT OPERATION MARKINGS (FRONT PANEL CONTROL)
9 FREQUENCY STANDARD ELECTRONIC ASSEMBLY SWITCH S1 MUST BE SET TO COMPARE TO OBTAIN 5-MC STANDARD OUTPUT
10 C3 NOT USED ON EARLIER MODELS

Figure 5-1. Radio Receiver R-1051/URR, Chassis and Main Frame, Schematic Diagram (Sheet 1 of 2)

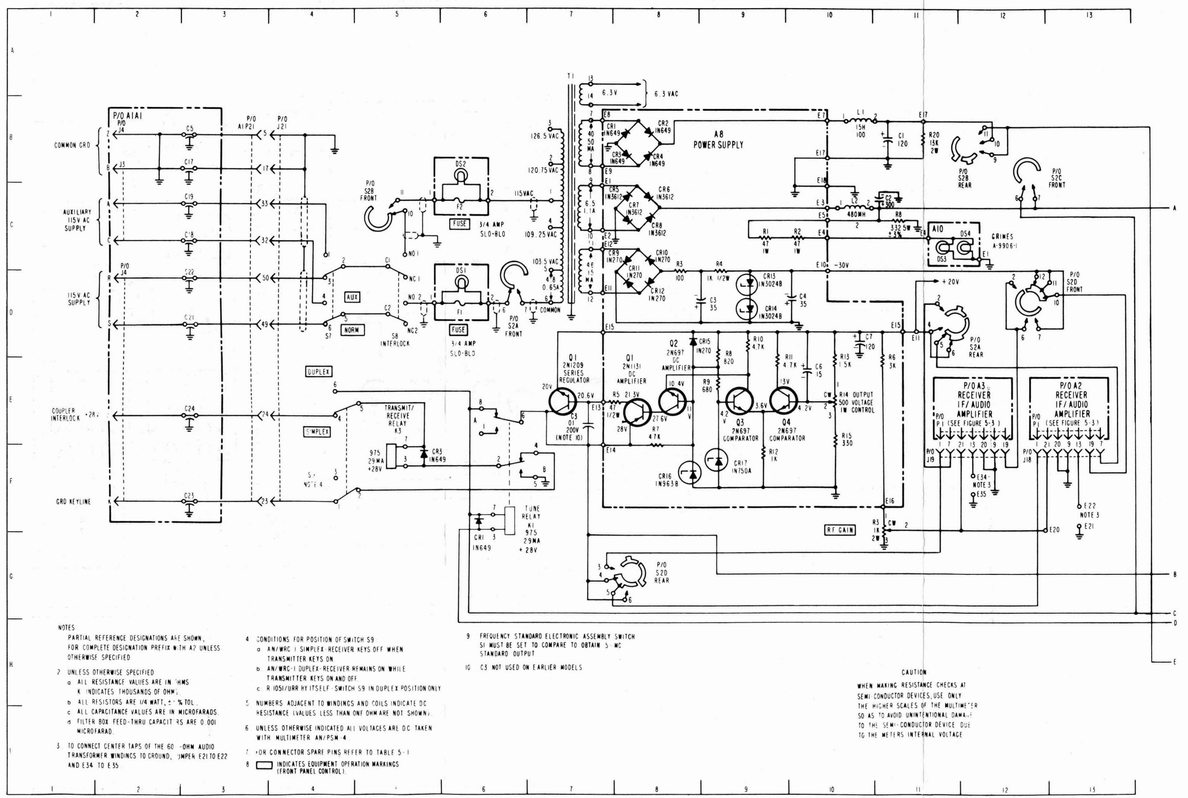

NOTES
1. PARTIAL REFERENCE DESIGNATIONS ARE SHOWN. FOR COMPLETE DESIGNATION PREFIX WITH A2 UNLESS OTHERWISE SPECIFIED
2. UNLESS OTHERWISE SPECIFIED
   a. ALL RESISTANCE VALUES ARE IN OHMS K INDICATES THOUSANDS OF OHMS
   b. ALL RESISTORS ARE 1/4 WATT, ± % TOL.
   c. ALL CAPACITANCE VALUES ARE IN MICROFARADS
   d. FILTER BOX FEED-THRU CAPACITORS ARE 0.001 MICROFARAD.
3. TO CONNECT CENTER TAPS OF THE 600 -OHM AUDIO TRANSFORMER WINDINGS TO GROUND, JUMPER E21 TO E22 AND E34 TO E35.
4. CONDITIONS FOR POSITION OF SWITCH S9:
   a. AN/WRC-1 SIMPLEX RECEIVER KEYS OFF WHEN TRANSMITTER KEYS ON
   b. AN/WRC-1 DUPLEX-RECEIVER REMAINS ON WHILE TRANSMITTER KEYS ON AND OFF
   c. R-1051/URR HIMSELF. SWITCH S9 IN DUPLEX POSITION ONLY.
5. NUMBERS ADJACENT TO WINDINGS AND COILS INDICATE DC RESISTANCE (VALUES LESS THAN ONE OHM ARE NOT SHOWN).
6. UNLESS OTHERWISE INDICATED ALL VOLTAGES ARE D.C. TAKEN WITH MULTIMETER AN/PSM-4
7. +ON CONNECTOR SPARE PINS REFER TO TABLE 5-1
8. INDICATES EQUIPMENT OPERATION MARKINGS (FRONT PANEL CONTROL)
9. FREQUENCY STANDARD ELECTRONIC ASSEMBLY SWITCH S1 MUST BE SET TO COMPARE TO OBTAIN 5 MC STANDARD OUTPUT
10. C3 NOT USED ON EARLIER MODELS

CAUTION
WHEN MAKING RESISTANCE CHECKS AT SEMI-CONDUCTOR DEVICES, USE ONLY THE HIGHER SCALES OF THE MULTIMETER SO AS TO AVOID UNINTENTIONAL DAMAGE TO THE SEMI-CONDUCTOR DEVICE DUE TO THE METER'S INTERNAL VOLTAGE

Figure 5-1. Radio Receiver R-1051/URR, Chassis and Main Frame, Schematic Diagram (Sheet 1 of 2)

PARTS LOCATION INDEX

REF. DESIG.	LOC.
A1J23	14B
A1J24	34I
A1J25	14H
A1P21	3B, 3C, 3D, 3E, 3F, 16A, 16I, 36A, 36B, 36C, 36D, 36E, 36F
A1P22	15B, 15H, 34I
A1A1C5	3B
A1A1C6	16I
A1A1C7	36E
A1A1C8	16I
A1A1C10	16A
A1A1C11	36F
A1A1C12	36F
A1A1C13	36D
A1A1C15	36A
A1A1C16	36B
A1A1C17	3B
A1A1C18	3C
A1A1C19	3C
A1A1C21	3D
A1A1C22	3D
A1A1C23	3F
A1A1C24	3E
A1A1C25	36C
A1A1J3	2C, 2B
A1A1J4	2B, 2D, 2E, 2F, 14A, 14I, 37A, 37B, 37C, 37D, 37E, 37F
A1A1J5	37B
A1A1J6	37F
C1	11B
C2	11C
C3	7E
CR1	6E
CR2	18D
CR3	5F
CR4	18E
DS1	6D
DS2	6B
DS5	24H
P1	6D
P2	6C
FL1	20H
FL2	18H
J1	34E
J2	34D
J8	19E, 19F, 20E, 21E
J9	20G, 21F, 22G
J10	22B, 23B
J11	22A, 24A, 24B, 23B
J12	23F, 24C, 24D, 25B, 27G, 28G, 29C, 29D
J13	25B, 29A
J14	25A, 29B
J16	29A, 30C, 31C, 31A, 31B
J17	29C, 30C, 31C
J18	12F, 13F, 32A, 32B, 33C, 34A, 34B, 34C
J19	11F, 12F, 32F, 33G, 34E, 34F
J21	4B, 4C, 4D, 4E, 4F, 17I, 17A, 36A, 36B, 36C, 36D, 36E, 36F
J22	16B, 16H, 34I
K1	6E
K2	19D
K2A	24H
K3	5F
K3A	23H
K3B	22H
L1	10B
L2	10C
M1	35G
M2	35B
Q1	7E
R1	32F
R2	32C
R3	11F
R4	35E
R5	34B
R6	30E
R7	25H
R8	11C
R9	34D
R10	34E
R11	32G
R12	32C
R13	34G
R15	35G
R16	35B
R17	32G
R18	32C
R19	30F
R20	11B
S1	34G
S2A (Front)	6D, 33D
S2A (Rear)	11D, 32E
S2B (Front)	3C, 34C, 35C
S2B (Rear)	31G
S2C (Front)	12B, 32D
S2C (Rear)	31E
S2D (Front)	12D
S2D (Rear)	8G, 31D
S5	34B
S6 (Front)	27H
S6 (Rear)	30H
S7	4D
S8	5D
S9	4E, 4F
T1	7A, 7B, 7C, 7D
A1P1	30A, 30C, 31A, 31B, 31C
A1P2	30C, 31C
A2P1	12E, 13E, 32A, 32B, 33B, 34A, 34B
A3P1	11E, 12E, 32F, 33G, 34E, 34F
A4P1	22A, 23B
A4P2	24A, 24B, 22A, 23A,
A5P1	20G, 21G, 22G
A6A1P1	25C, 26C
A6A2P1	27D, 27E, 28D, 28E
A6A3J1	26E
A6A3J3	26E
A6A3J4	26E
A6A3J5	26E
A6A3J6	27E
A6A3J7	26E
A6A4P1	27F, 28F
A6A5J1	25F
A6A5J2	24F
A6A5J3	24F
A6A5J4	25E
A6A5J5	25E
A6A5J6	24E
A6A6J1	26B
A6A6J2	27B
A6A6J3	26B
A6A6J4	28B
A6A6J5	28B
A6A6J6	27B
A6A6J7	26B
A6C1	28C
A6C2	27C
A6J4	25C, 25D, 26C, 26D
A6J5	27F, 28F
A6J6	27D, 27E, 28D, 28E
A6P1	24C, 24D, 24F, 25B, 27G, 28C, 28D, 28G
A6P2	25B, 28A, 28E
A6P3	25A, 28B
A6P7	27B
A6P8	28B
A6P9	28B
A6P10	26B
A6P11	26B
A6P12	27B
A6P13	26B
A6P14	26F
A6P15	26F
A6P16	27E
A6P17	26E
A6P18	26E
A6P19	26E
A6P21	24F
A6P22	25F
A6P23	25E
A6P24	25E
A6P25	25E
A6P26	24F
A7P8	19E, 20E, 21E
A7S3	21E
A7S4	21E
A8C3	9D
A8C4	10D
A8C6	10E
A8C7	10D
A8CR1	8B
A8CR2	8B
A8CR3	8B
A8CR4	8B
A8CR5	8C
A8CR6	8C
A8CR7	8C
A8CR8	8C
A8CR9	8C
A9CR10	8C
A8CR11	8D
A8CR12	8D
A8CR13	9D
A8CR14	9D
A8CR15	8D
A8CR16	8F
A8CR17	9F
A8Q1	8E
A8Q2	8E
A8Q3	9E
A8Q4	9E
A8R1	9C
A8R2	10C
A8R3	8D
A8R4	9D
A8R5	8E
A8R6	11E
A8R7	8E
A8R8	9D
A8R9	9E
A8R10	9D
A8R11	9D
A8R12	9F
A8R13	10E
A8R14	10E
A8R15	10E
A9C1	18B
A9C2	18B
A9C3	18C
A9C4	19B
A9C5	20B
A9CR1	19B
A9K1	20B
A9Q1	20B
A9R1	18B
A9R2	19B
A9R3	19B
A9R4	20B
A9R5	20B
A10DS3	11C
A10DS4	12C
A11C1	25H
A11R1	25H
A11R2	26H
A11R3	25G
A11R4	26H
A11R5	26G
A11R6	26H
A11R7	25H

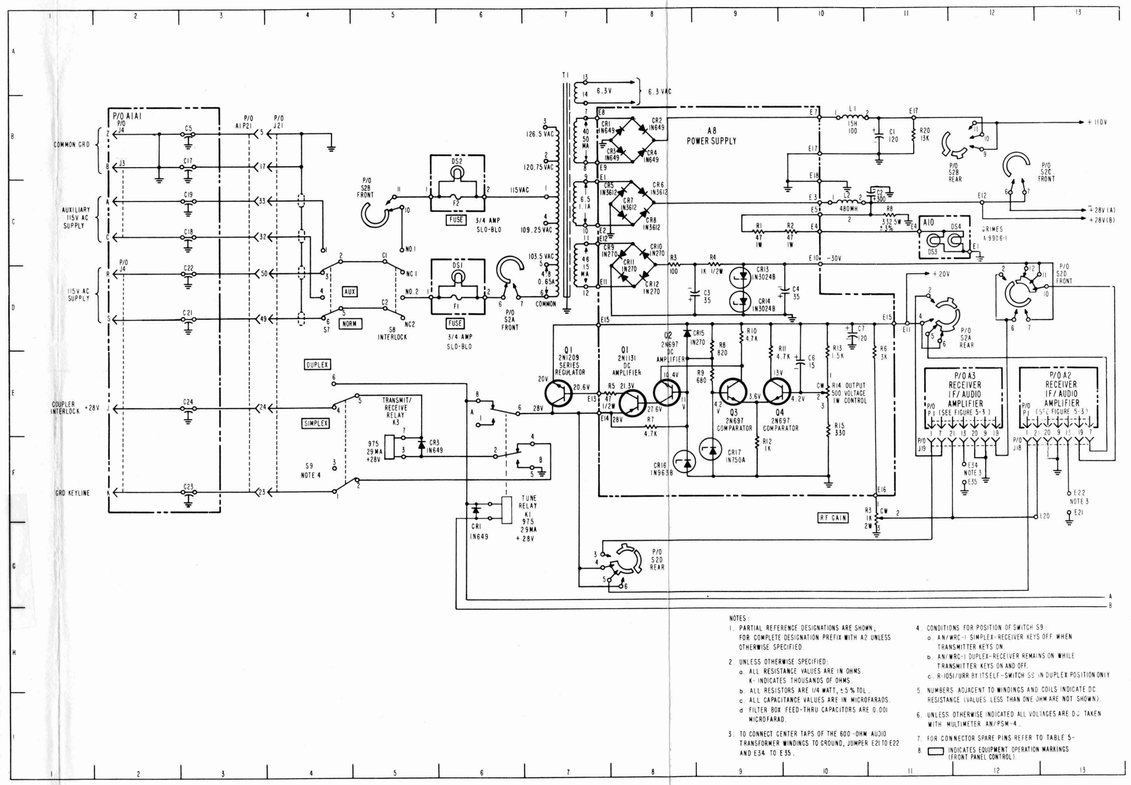

Figure 5-1. Radio Receiver R-1051/URR, Chassis and Main Frame, Schematic Diagram (Sheet 1 of 2)

PARTS LOCATION INDEX

REF DESIG	LOC
A1J23	14B
A1J24	34I
A1J25	14H
A1P21	3B, 3C, 3D, 3E, 3F, 16A, 16I, 36A, 36B, 36C, 36D, 36E, 36F
A1P22	15B, 15H, 34I
A1A1C5	3B
A1A1C6	16I
A1A1C7	36E
A1A1C8	16I
A1A1C10	16A
A1A1C11	36F
A1A1C12	36F
A1A1C13	36D
A1A1C15	36A
A1A1C16	36B
A1A1C17	3B
A1A1C18	3C
A1A1C19	3C
A1A1C21	3D
A1A1C22	3D
A1A1C23	3F
A1A1C24	3E
A1A1C25	36C
A1A1J3	2C, 2B
A1A1J4	2B, 2D, 2E, 2F, 14A, 14I, 37A, 37B, 37C, 37D, 37E, 37F
A1A1J5	37B
A1A1J6	37F
C1	11B
C2	11C
CR1	6E
CR2	19D
CR3	5F
DS1	6D
DS2	6B
DS5	24H
F1	6D
F2	6C
FL1	20H
FL2	18H
J1	34E
J2	34D
J8	19E, 19F, 20E, 21E
J9	20G, 21F, 22G
J10	22B, 23B
J11	22A, 24A, 24B, 23B
J12	23F, 24C, 24D, 25B, 27G, 28G, 29C, 29D
J13	25B, 29A
J14	25A, 29B
J16	29A, 30C, 31C, 31A, 31B
J17	29C, 30C, 31C
J18	12F, 13F, 32A, 32B, 33C, 34A, 34B, 34C
J19	11F, 12F, 32F, 33G, 34E, 34F
J21	4B, 4C, 4D, 4E, 4F, 17I, 17A, 36A, 36B, 36C, 36D, 36E, 36F, 16B, 16H, 34I
J22	16B, 16H, 34I
K1	6E
K2	19D
K2A	24H
K3	5F
K3A	23H
K3B	22H
L1	10B
L2	10C
M1	35G
M2	35B
Q1	7E
R1	32F
R2	32C
R3	11F
R4	35E
R5	34B
R6	30E
R7	25H
R8	11C
R9	34D
R10	34E
R11	32G
R12	32C
R13	34G
R15	35G
R16	35B
R17	32G
R18	32C
R19	30F
R20	11B
S1	34G
S2A (Front)	6D, 33D
S2A (Rear)	11D, 32E
S2B (Front)	5C, 34C, 35C
S2B (Rear)	31G
S2C (Front)	12B, 32D
S2C (Rear)	31E
S2D (Front)	12D
S2D (Rear)	8G, 31D
S5	34B
S6	27H
S7	4D
S8	5D
S9	4E, 4F
T1	7A, 7B, 7C, 7D
A1P1	30A, 30C, 31A, 31B, 31C
A1P2	30C, 31C
A2P1	12E, 13E, 32A, 32B, 33B, 34A, 34B
A3P1	11E, 12E, 32F, 33G, 34E, 34F
A4P1	22A, 23B
A4P2	24A, 24B, 22A, 23A,
A5P1	20G, 21G, 22G
A6A1P1	25C, 26C
A6A2P1	27D, 27E, 28D, 28E
A6A3J1	26E
A6A3J3	26E
A6A3J4	26E
A6A3J5	26E
A6A3J6	27E
A6A3J7	26E
A6A4P1	27F, 28F
A6A5J1	25F
A6A5J2	24F
A6A5J3	24F
A6A5J4	25E
A6A5J5	25E
A6A5J6	24E
A6A6J1	26B
A6A6J2	27B
A6A6J3	26B
A6A6J4	28B
A6A6J5	28B
A6A6J6	27B
A6A6J7	26B
A6C1	28C
A6C2	27C
A6J4	25C, 25D, 26C, 26D
A6J5	27F, 28F
A6J6	27D, 27E, 28D, 28E
A6P1	24C, 24D, 24F, 25B, 27G, 28C, 28D, 28G
A6P2	25B, 28A, 28E
A6P3	25A, 28B
A6P7	27B
A6P8	28B
A6P9	28B
A6P10	26B
A6P11	26B
A6P12	27B
A6P13	26B
A6P14	26F
A6P15	26F
A6P16	27E
A6P17	26E
A6P18	26E
A6P19	26E
A6P21	24F
A6P22	25F
A6P23	25E
A6P24	25E
A6P25	25E
A6P26	24F
A7P8	19E, 20E, 21E
A7S3	24F
A7S4	21E
A8C3	9D
A8C4	10D
A8C6	10E
A8C7	10D
A8CR1	8B
A8CR2	8B
A8CR3	8B
A8CR4	8B
A8CR5	8C
A8CR6	8C
A8CR7	8C
A8CR8	8C
A8CR9	8C
A9CR10	8C
A8CR11	8D
A8CR12	8D
A8CR13	9D
A8CR14	9D
A8CR15	8D
A8CR16	8F
A8CR17	9F
A8Q1	8E
A8Q2	8E
A8Q3	9E
A8Q4	9E
A8R1	9C
A8R2	10C
A8R3	8D
A8R4	9D
A8R5	8E
A8R6	11E
A8R7	8E
A8R8	9D
A8R9	9E
A8R10	9D
A8R11	9D
A8R12	9F
A8R13	10E
A8R14	10E
A8R15	10E
A9C1	18B
A9C3	18C
A9C2	18B
A9C4	19B
A9C5	20B
A9CR1	19B
A9K1	20B
A9Q1	20B
A9R1	18B
A9R2	19B
A9R3	19B
A9R4	20B
A9R5	20B
A10DS3	11C
A10DS4	12C
A11C1	25H
A11R1	25H
A11R2	26H
A11R3	25G
A11R4	26H
A11R5	26G
A11R6	26H
A11R7	25H

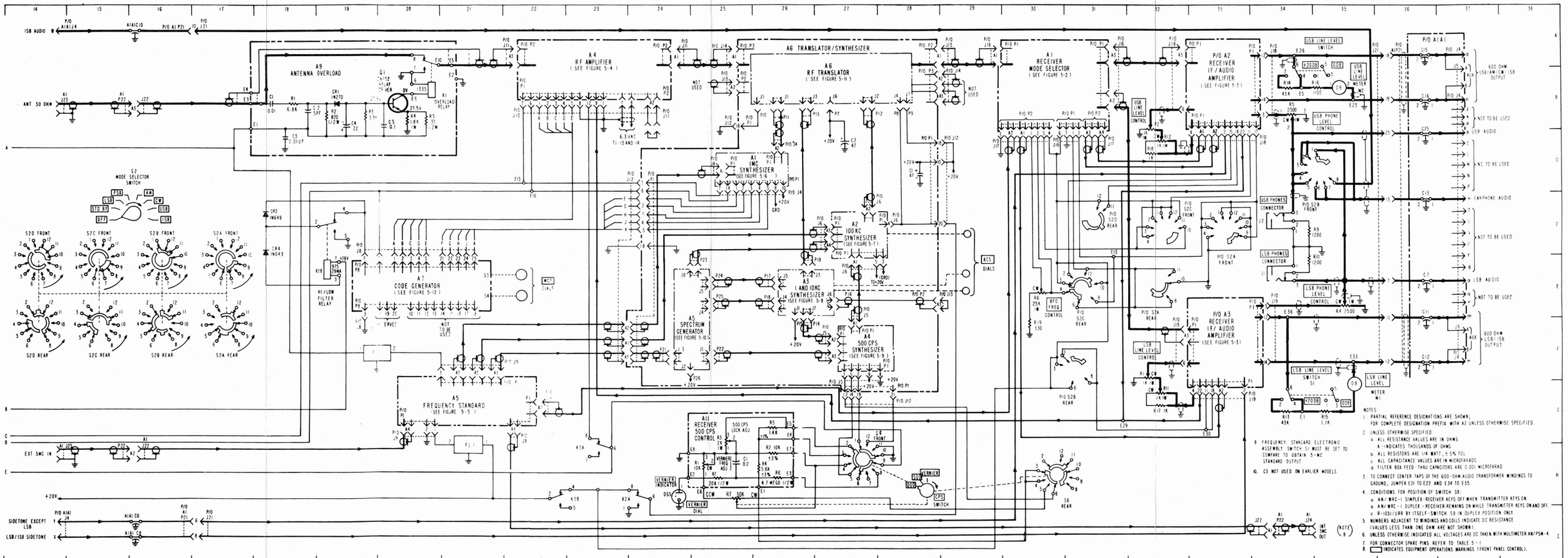

Figure 5-1. Radio Receiver R-1051/URR, Chassis and Main Frame, Schematic Diagram (Sheet 2 of 2)

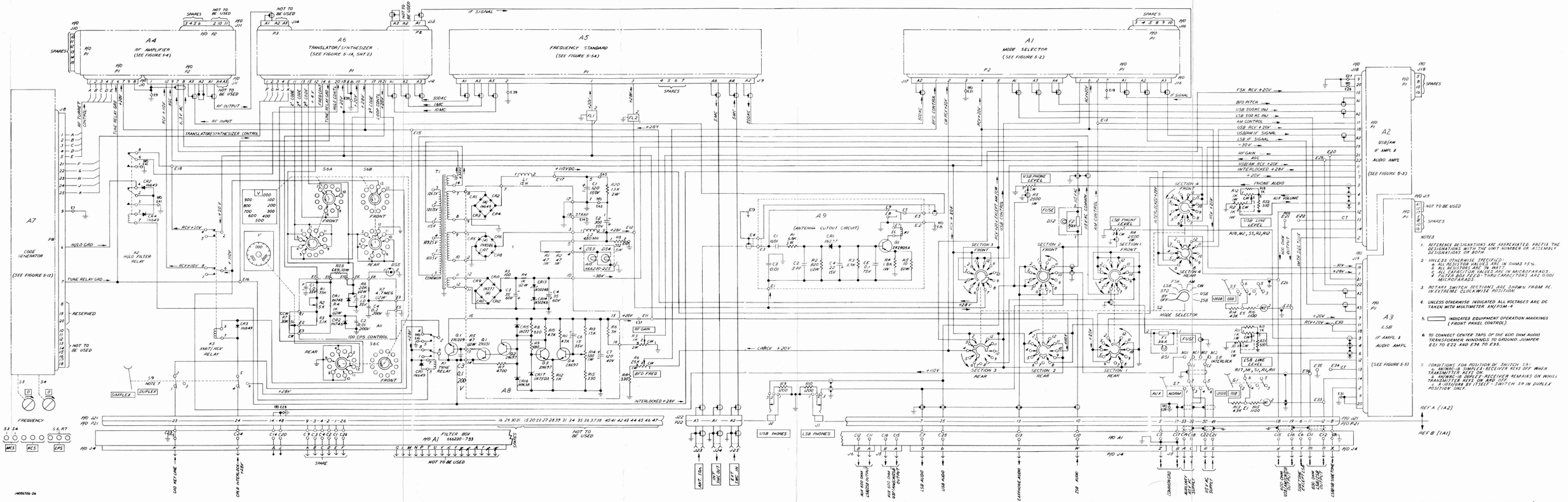

Figure 5-1A. Radio Receiver R-1051B/URR, Chassis and Main Frame, Schematic Diagram (Sheet 1)

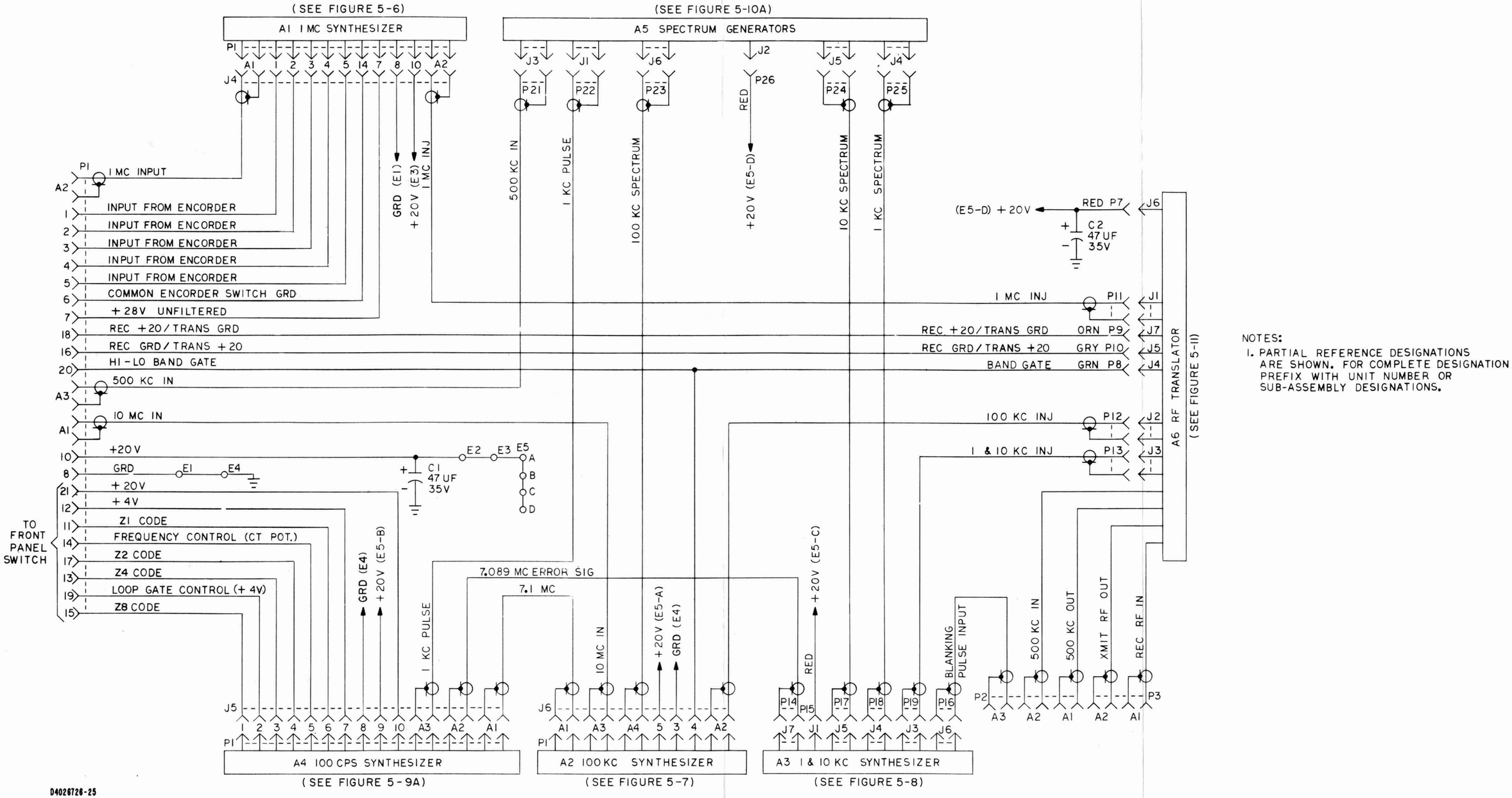

NOTES:
1. PARTIAL REFERENCE DESIGNATIONS ARE SHOWN. FOR COMPLETE DESIGNATION PREFIX WITH UNIT NUMBER OR SUB-ASSEMBLY DESIGNATIONS.

Figure 5-1A. Radio Receiver R-1051B/URR, Chassis and Main Frame, Schematic Diagram (Sheet 2)

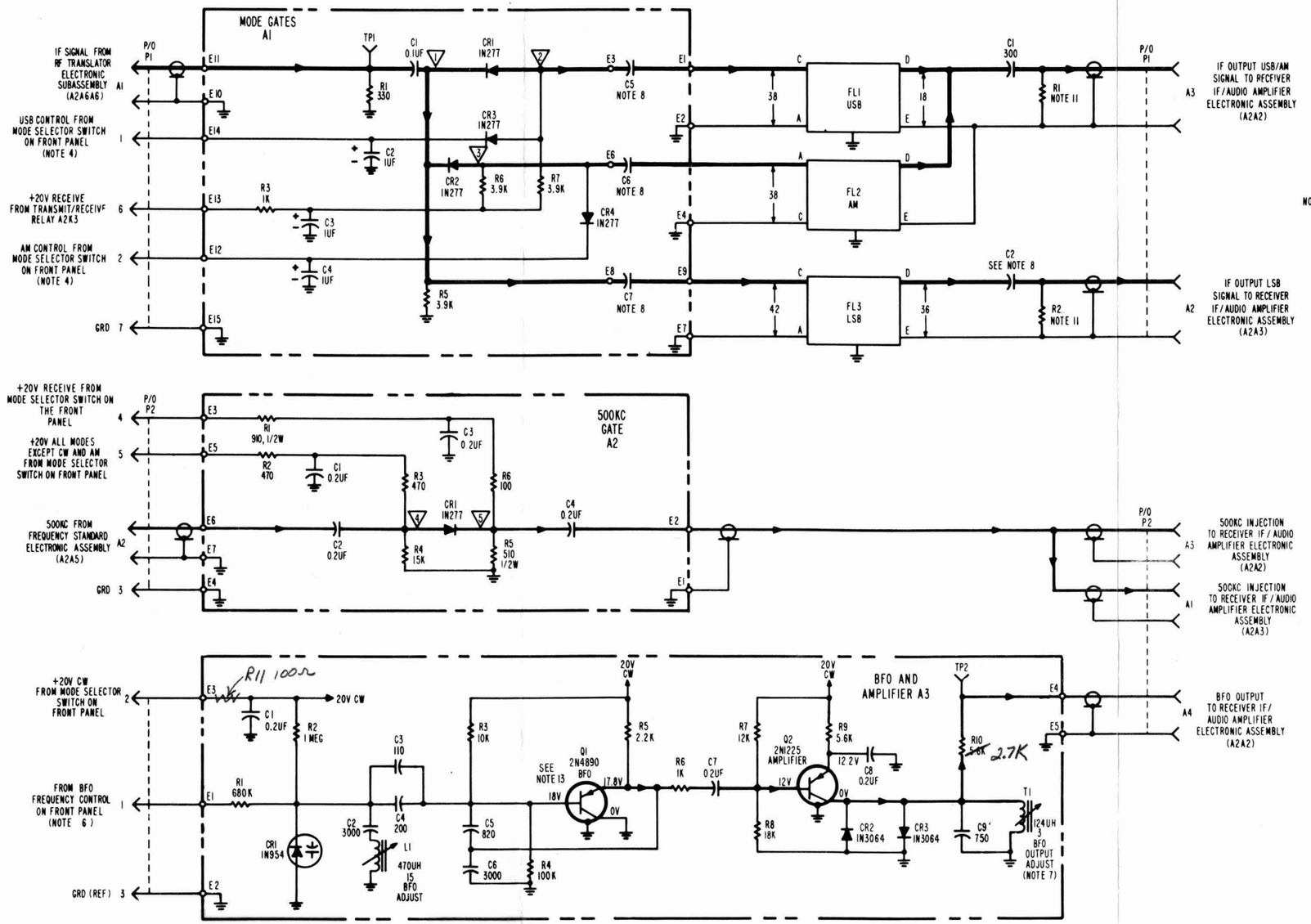

NOTES:

1. PARTIAL REFERENCE DESIGNATIONS ARE SHOWN: FOR COMPLETE DESIGNATION PREFIX WITH A2A1.
2. UNLESS OTHERWISE SPECIFIED:
   a. ALL RESISTANCE VALUES ARE IN OHMS K-INDICATES THOUSANDS OF OHMS
   b. ALL RESISTORS ARE 1/4 WATT ±5% TOLERANCE
   c. ALL CAPACITANCE VALUES ARE IN PICOFARADS, UF INDICATES MICROFARADS.
3. NUMBERS ADJACENT TO WINDINGS, COILS, AND TEST POINTS INDICATE DC RESISTANCE (VALUES LESS THAN ONE OHM ARE NOT SHOWN)

4

MODE	LSB	FSK	AM	CW	USB	ISB
P1-1	GRD	+20V	GRD	GRD	+20V	+20V
P1-2	GRD	GRD	+20V	+20V	GRD	GRD

5

MODE	▽	▽	▽	▽	▽
LSB	0.22V	0.33V	0.33V	10V	10V
FSK	7.3V	7.4V	0.33V	10V	10V
AM	7.3V	0.33V	7.4V	0.04V	6.5V
CW	7.3	0.33V	7.4V	0.04V	6.5V
USB	7.3V	7.4V	0.33V	10V	10V
ISB	7.3V	7.4V	0.33V	10V	10V

6. 0.2 TO 20V PRESENT DEPENDING ON BFO FREQUENCY CONTROL POSITION.
7. A3L2 IS ADJUSTED AND SEALED AT THE FACTORY.
8. CAPACITANCE TO BE SELECTED AT ASSEMBLY
9. UNLESS OTHERWISE INDICATED ALL VOLTAGES ARE DC TAKEN WITH ELECTRONIC MULTIMETER AN/USM-116
10. VOLTAGE READINGS ON A3Q1 AND A3Q2 ARE FOR CW MODE ONLY
11. RESISTANCE TO BE SELECTED AT ASSEMBLY (100-510 OHM).
12. FOR CONNECTOR SPARE PINS REFER TO TABLE 5
13. SOME UNITS HAVE 2N1225 AT THIS LOCATION.
14. RESISTANCE TO BE SELECTED AT ASSEMBLY (10-82K).

CAUTION

When making resistance checks at semi-conductor devices, use only the higher scales of the multimeter so as to avoid unintentional damage to the semi-conductor device due to the meters internal voltage.

Figure 5-2. Receiver Mode Selector Electronic Assembly, Schematic Diagram

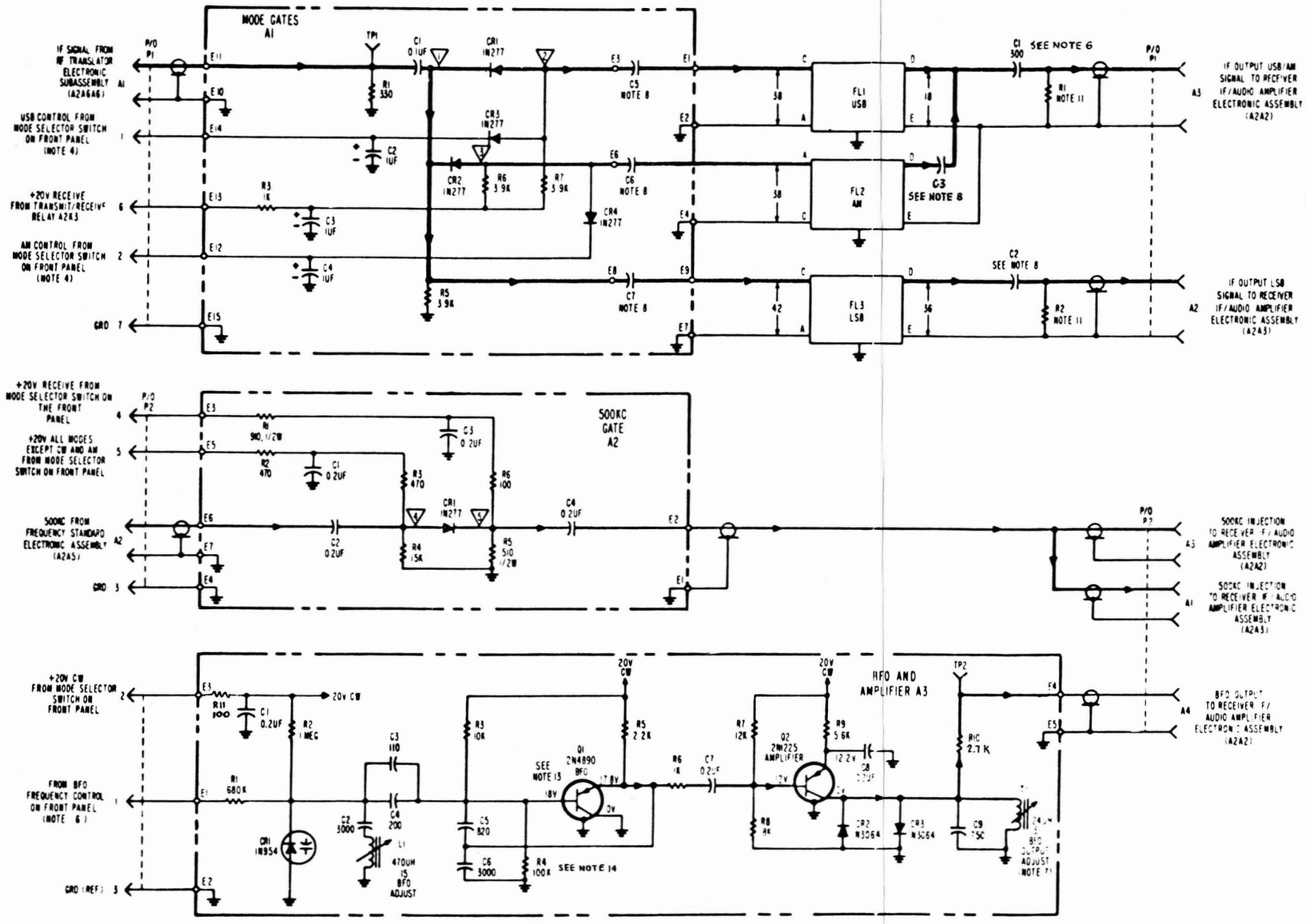

NOTES:

1. PARTIAL REFERENCE DESIGNATIONS ARE SHOWN FOR COMPLETE DESIGNATION PREFIX WITH A2A1
2. UNLESS OTHERWISE SPECIFIED
   a. ALL RESISTANCE VALUES ARE IN OHMS K-INDICATES THOUSANDS OF OHMS
   b. ALL RESISTORS ARE 1/4 WATT ±5% TOLERANCE
   c. ALL CAPACITANCE VALUES ARE IN PICOFARADS, UF INDICATES MICROFARADS
3. NUMBERS ADJACENT TO WINDINGS, COILS, AND TEST POINTS INDICATE DC RESISTANCE (VALUES LESS THAN ONE OHM ARE NOT SHOWN)
4.

MODE	LSB	FSK	AM	CW	USB	ISB
P1-1	GRD	+20V	GRD	GRD	+20V	+20V
P1-2	GRD	GRD	+20V	+20V	GRD	GRD

5.

MODE	▽	▽	▽	▽	▽
LSB	0.22V	0.33V	0.33V	10V	10V
FSK	7.3V	7.4V	0.33V	10V	10V
AM	7.3V	0.33V	7.4V	0.04V	6.5V
CW	7.3	0.33V	7.4V	0.04V	6.5V
USB	7.3V	7.4V	0.33V	10V	10V
ISB	7.3V	7.4V	0.33V	10V	10V

6. 0.2 TO 20V PRESENT DEPENDING ON BFO FREQUENCY CONTROL POSITION
7. A3L2 IS ADJUSTED AND SEALED AT THE FACTORY
8. CAPACITANCE TO BE SELECTED AT ASSEMBLY
9. UNLESS OTHERWISE INDICATED ALL VOLTAGES ARE DC TAKEN WITH ELECTRONIC MULTIMETER AN/USM-116
10. VOLTAGE READINGS ON A3Q1 AND A3Q2 ARE FOR CW MODE ONLY
11. RESISTANCE TO BE SELECTED AT ASSEMBLY (100-510 OHMS).
12. FOR CONNECTOR SPARE PINS REFER TO TABLE 5
13. SOME UNITS HAVE 2N1225 AT THIS LOCATION
14. RESISTANCE TO BE SELECTED AT ASSEMBLY (22-82K)

Figure 5-2A. Receiver Mode Selector Electronic Assembly, Schematic Diagram

PARTS LOCATION INDEX

REF DESIG	LOC	REF DESIG	LOC	REF DESIG	LOC
P1	2A, 2B, 2C, 2D, 2F, 2G, 2H, 2I, 23B, 23C, 23D	A1R28	21G	A2R15	9C
		A1R29	22F	A2R16	9B
		A1R30	22F	A2R17	9B
		A1RT1	9G	A2R18	10C
T1	19B	A1T1	8F	A2R19	11B
A1C1	13G	A1T2	6F	A2R20	11C
A1C2	12G	A1TP1	12E	A2R21	11B
A1C3	11G	A1TP2	14G	A2R22	11B
A1C4	8E	A2C1	3B	A2R23	12C
A1C5	9E	A2C2	5B	A2R24	13B
A1C6	3E	A2C3	5C	A2R25	13C
A1C7	8F	A2C4	6B	A2R26	14B
A1C8	8G	A2C5	6C	A2R27	14B
A1C9	7F	A2C6	7C	A2R28	14C
A1C10	6G	A2C7	7C	A2R29	15C
A1C11	5F	A2C8	8C	A2R30	15C
A1C12	21F	A2C9	7B	A2R31	16B
A1C13	22F	A2C10	9C	A2R32	16B
A1CR1	14G	A2C11	10C	A2R33	16C
A1CR2	13F	A2C12	10B	A2R34	17B
A1CR3	13F	A2C13	11C	A2R35	17B
A1CR4	10G	A2C14	11C	A2R36	17C
A1CR5	9F	A2C15	12B	A2R37	19B
A1Q1	14F	A2C16	13C	A2R38	6B
A1Q2	13F	A2C17	14C	A2T1	5C
A1Q3	12F	A2C18	14B	A2T2	8C
A1Q4	11F	A2C19	15C	A2T3	10C
A1Q5	10E	A2C20	16C	A2T4	12C
A1Q6	10F	A2C21	16B	A2T5	17B
A1Q7	7F	A2C22	17C	A3C1	17E
A1Q8	5F	A2C23	17C	A3C2	17F
A1Q9	22F	A2C24	18D	A3C3	17F
A1R1	14F	A2C25	4B	A3C4	17G
A1R2	14G	A2C26	15C	A3C5	19F
A1R3	14E	A2CR1	6C	A3C6	20G
A1R4	14F	A2L1	4A	A3C7	20G
A1R5	13G	A2Q1	4B	A3CR1	19E
A1R6	13G	A2Q2	6C	A3CR2	20F
A1R7	13F	A2Q3	7B	A3L1	19G
A1R8	13E	A2Q4	7C	A3Q1	17F
A1R9	12G	A2Q5	9C	A3Q2	17F
A1R10	12E	A2Q6	11C	A3Q3	19F
A1R11	12F	A2Q7	15C	A3R1	17E
A1R12	11G	A2Q8	16C	A3R2	17E
A1R13	10E	A2Q9	18B	A3R3	17G
A1R14	10F	A2Q10	18C	A3R4	17G
A1R15	9G	A2R1	4B	A3R5	19F
A1R16	9G	A2R2	4C	A3R6	20F
A1R17	9E	A2R3	5B	A3T1	18F
A1R18	7E	A2R5	5B	A3TP3	16E
A1R19	8E	A2R6	6C		
A1R20	7E	A2R7	6C		
A1R21	7F	A2R8	6B		
A1R22	5E	A2R9	7C		
A1R23	4F	A2R10	7B		
A1R24	5G	A2R11	7C		
A1R25	5G	A2R12	8B		
A1R26	4G	A2R13	8C		
A1R27	21F	A2R14	9B		

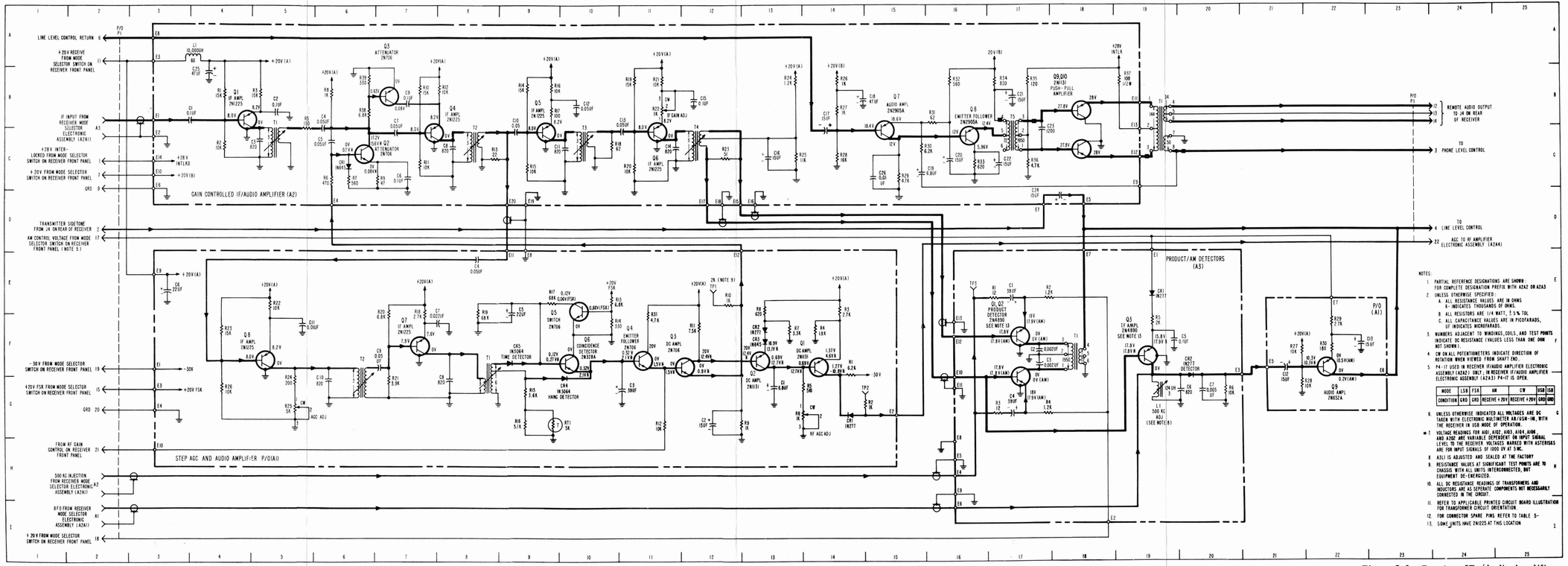

Figure 5-3. Receiver IF./Audio Amplifier Electronic Assembly, Schematic Diagram

CAUTION

When making resistance checks at semi-conductor devices, use only the higher scales of the multimeter so as to avoid unintentional damage to the semi-conductor device due to the meters internal voltage.

PARTS LOCATION INDEX

REF DESIG	LOC	REF DESIG	LOC	REF DESIG	LOC	REF DESIG	LOC
B1	6G	R3	15C	A2T2	11B	A34C10	18E
C1	12B	S1	5H	thru		thru	
C2	12C	TP4	19A	A29T2		A34C19	
C3	14B	V1	4E, 13B	A2T3	15E	A35C1	19E
C4	14C	V2	4E, 5B	thru		thru	
C5	15B	A1C1	13C	A29T3		A35C9	
C6	16C	A1C2	14C	A2T4	17A	A36C1	20C
C7	16B	A1C3	16B	thru		thru	
C8	12E	A1R1	12C	A29T4		A36C9	
C9	13F	A1R2	12C	A9Y1	11C	A37C1	19C
C10	14E	A1R3	13C	A10Y1	11C	thru	
C11	18D	A1R4	14E	A19Y1	11C	A37C9	
C12	18E	A1R5	15B	A30C1	12H	A37C10	19C
C13	19B	A1R6	16D	thru		thru	
C14	20C	A2C1	10B	A30C9		A37C19	
C15	3E	thru		A30C10	12H	A38C1	4B
C16	3E	A29C1		thru		A38C2	5C
C17	5E	A2C2	10C	A30C19		A38C3	6B
C18	5E	thru		A31C1	13H	A38C4	6A
C19	12G	A29C3		thru		A38C5	6B
C20	12H	A2C3	11C	A31C9		A38C6	7C
FL1	12B	thru		A32C1	13F	A38K1	8D
FL2	15B	A29C3		thru		A38L1	4C
FL3	16A	A2C4	16D	A32C9		A38Q1	5B
K1	7G	thru		A33C1	12F	A38Q2	6B
P1	3F, 3G, 3H	A29C4		thru		A38R1	4B
P2	3A, 3B, 3C	A2C5	18A	A33C9		A38R2	4B
	3D, 3E, 3F	thru		A33C10	12F	A38R3	4B
	19B	A29C5		thru		A38R5	5C
R1	13C	A2T1	9B	A33C19		A38R6	5B
R2	13C	thru		A34C1	18E	A38R7	6B
		A29T1		thru		A38R8	6B
				A34C9		A38R9	7B
						A38R10	7B
						A38TP1	4A
						A38TP2	6A

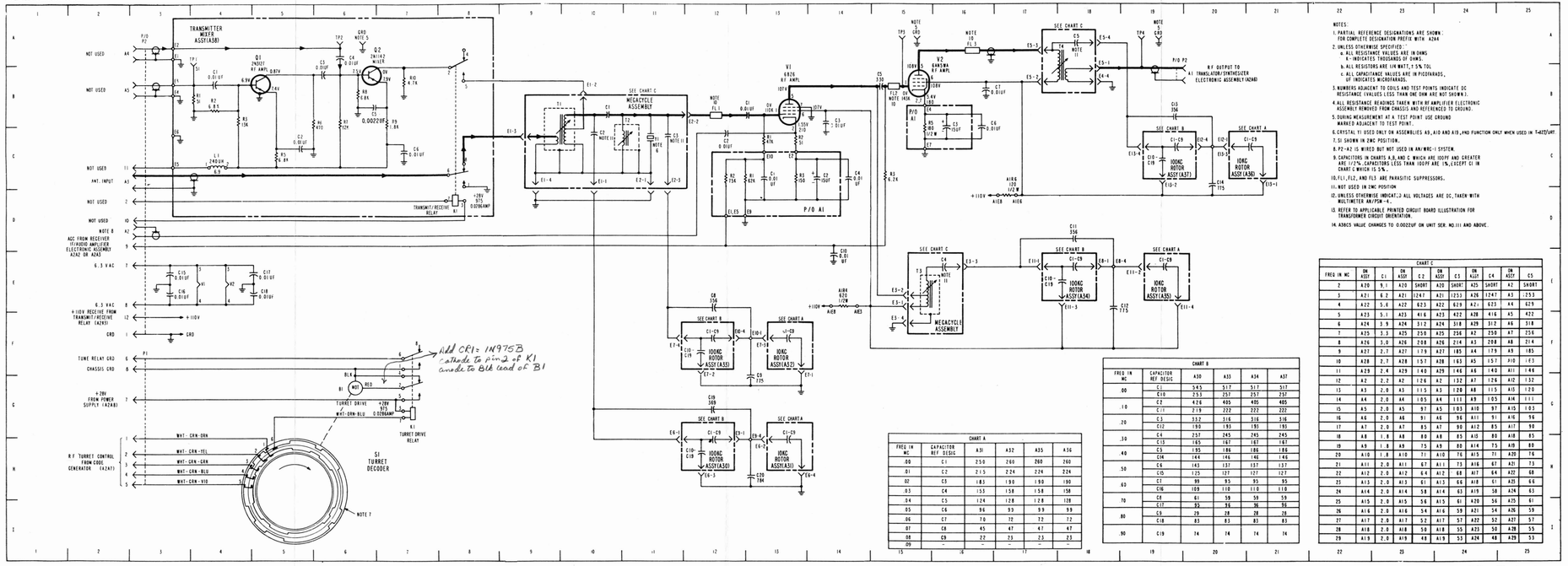

NOTES:
1. PARTIAL REFERENCE DESIGNATIONS ARE SHOWN; FOR COMPLETE DESIGNATION PREFIX WITH A2A4
2. UNLESS OTHERWISE SPECIFIED:
   a. ALL RESISTANCE VALUES ARE IN OHMS K = INDICATES THOUSANDS OF OHMS.
   b. ALL RESISTORS ARE 1/4 WATT, ± 5% TOL
   c. ALL CAPACITANCE VALUES ARE IN PICOFARADS, UF INDICATES MICROFARADS.
3. NUMBERS ADJACENT TO COILS AND TEST POINTS INDICATE DC RESISTANCE (VALUES LESS THAN ONE OHM ARE NOT SHOWN).
4. ALL RESISTANCE READINGS TAKEN WITH RF AMPLIFIER ELECTRONIC ASSEMBLY REMOVED FROM CHASSIS AND REFERENCED TO GROUND.
5. DURING MEASUREMENT AT A TEST POINT USE GROUND MARKED ADJACENT TO TEST POINT.
6. CRYSTAL Y1 USED ONLY ON ASSEMBLIES A9, A10 AND A19, AND FUNCTION ONLY WHEN USED IN T-422/URT.
7. SI SHOWN IN CW2 POSITION.
8. P2-A2 IS WIRED BUT NOT USED IN AN/URC-1 SYSTEM.
9. CAPACITORS IN CHARTS A, B, AND C WHICH ARE 1000PF AND GREATER ARE 1/2%. CAPACITORS LESS THAN 1000PF ARE 1%, EXCEPT C1 IN CHART C WHICH IS 5%.
10. FL1, FL2, AND FL3 ARE PARASITIC SUPPRESSORS.
11. NOT USED IN CW2 POSITION
12. UNLESS OTHERWISE INDICATED ALL VOLTAGES ARE DC, TAKEN WITH MULTIMETER AN/PSM-4.
13. REFER TO APPLICABLE PRINTED CIRCUIT BOARD ILLUSTRATION FOR TRANSFORMER CIRCUIT ORIENTATION.
14. A38C9 VALUE CHANGES TO 0.0022UF ON UNIT SER. NO.111 AND ABOVE.

CHART A

FREQ IN MC	CAPACITOR REF DESIG	A31	A32	A33	A34	A35
.00	C1	250	260	260	260	260
.01	C2	215	224	224	224	224
.02	C3	185	190	190	190	190
.03	C4	153	158	158	158	158
.04	C5	124	128	128	128	128
.05	C6	96	99	99	99	99
.06	C7	70	72	72	72	72
.07	C8	45	47	47	47	47
.08	C9	22	23	23	23	23
.09	-	-	-	-	-	-

CHART B

FREQ IN MC	CAPACITOR REF DESIG	A30	A33	A34	A37
.00	C1	345	317	317	317
	C10	253	257	257	257
.10	C2	426	405	405	405
	C11	219	222	222	222
.20	C3	332	316	316	316
	C12	190	193	193	193
.30	C4	257	245	245	245
	C13	185	187	187	187
.40	C5	195	186	186	186
	C14	144	146	146	146
.50	C6	143	137	137	137
	C15	125	127	127	127
.60	C7	99	93	93	93
	C16	109	110	110	110
.70	C8	61	59	59	59
	C17	95	96	96	96
.80	C9	29	28	28	28
	C18	83	83	83	83
.90	C19	74	74	74	74

CHART C

FREQ IN MC	ON ASSY	C1	ON ASSY	C2	ON ASSY	C3	ON ASSY	C4	ON ASSY	C5
2	A20	9.1	A20	SHORT	A20	SHORT	A25	SHORT	A2	SHORT
3	A21	6.2	A21	1247	A21	1253	A26	1247	A3	1253
4	A22	5.6	A22	623	A22	629	A27	623	A4	629
5	A23	5.1	A23	416	A23	427	A28	416	A5	422
6	A24	3.9	A24	312	A24	318	A29	312	A6	318
7	A25	3.3	A25	250	A25	256	A2	250	A7	256
8	A26	3.0	A26	208	A26	214	A3	208	A8	214
9	A27	2.7	A27	179	A27	185	A4	179	A9	185
10	A28	2.7	A28	157	A28	163	A5	157	A10	163
11	A29	2.4	A29	140	A29	146	A6	140	A11	146
12	A2	2.2	A2	126	A2	132	A7	126	A12	132
13	A3	2.0	A3	115	A3	120	A8	115	A13	120
14	A4	2.0	A4	105	A4	111	A9	105	A14	111
15	A5	2.0	A5	97	A5	103	A10	97	A15	103
16	A6	2.0	A6	91	A6	96	A11	91	A16	96
17	A7	2.0	A7	85	A7	90	A12	85	A17	90
18	A8	1.8	A8	80	A8	85	A13	80	A18	85
19	A9	1.8	A9	75	A9	80	A14	75	A19	80
20	A10	1.8	A10	71	A10	76	A15	71	A20	76
21	A11	2.0	A11	67	A11	73	A16	67	A21	73
22	A12	2.0	A12	64	A12	68	A17	64	A22	68
23	A13	2.0	A13	61	A13	66	A18	61	A23	66
24	A14	2.0	A14	58	A14	63	A19	58	A24	63
25	A15	2.0	A15	56	A15	61	A20	56	A25	61
26	A16	2.0	A16	54	A16	59	A21	54	A26	59
27	A17	2.0	A17	52	A17	57	A22	52	A27	57
28	A18	2.0	A18	50	A18	55	A23	50	A28	55
29	A19	2.0	A19	48	A19	53	A24	48	A29	53

Figure 5-4. RF Amplifier Electronic Assembly, Schematic Diagram

PARTS LOCATION INDEX

REF DESIG	LOC	REF DESIG	LOC	REF DESIG	LOC	REF DESIG	LOC
B1	6G	R3	15C	A2T2	11B	A34C10	18E
C1	12B	S1	5H	thru		thru	
C2	12C	TP4	19A	A29T2		A34C19	
C3	14B	V1	4E,13B	A2T3	15E	A35C1	19E
C4	14C	V2	4E, 5B	thru		thru	
C5	15B	A1C1	13C	A29T3		A35C9	
C6	16C	A1C2	14C	A2T4	17A	A36C1	20C
C7	16B	A1C3	16B	thru		thru	
C8	12E	A1R1	12C	A29T4		A36C9	
C9	13F	A1R2	12C	A9Y1	11C	A37C1	19C
C10	14E	A1R3	13C	A10Y1	11C	thru	
C11	18D	A1R4	14E	A19Y1	11C	A37C9	
C12	18E	A1R5	15B	A30C1	12H	A37C10	19C
C13	19B	A1R6	16D	thru		thru	
C14	20C	A2C1	10B	A30C9		A37C19	
C15	3E	thru		A30C10	12H	A38C1	4B
C16	3E	A29C1		thru		A38C2	5C
C17	5E	A2C2	10C	A30C19		A38C3	6B
C18	5E	thru		A31C1	13H	A38C4	6A
C19	12G	A29C3		thru		A38C5	6B
C20	12H	A2C3	11C	A31C9		A38C6	7C
CR1	6G	thru		A32C1	13F	A38K1	8D
FL1	12B	A29C3		thru		A38L1	4C
FL2	15B	A2C4	16D	A32C9		A38Q1	5B
FL3	16A	thru		A33C1	12F	A38Q2	6B
K1	7G	A29C4		thru		A38R1	4B
P1	3F, 3G, 3H	A2C5	18A	A33C9		A38R2	4B
P2	3A, 3B, 3C	thru		A33C10	12F	A38R3	4B
	3D, 3E, 3F	A29C5		thru		A38R5	5C
	19B	A2T1	9B	A33C19		A38R6	5B
R1	13C	thru		A34C1	18E	A38R7	6B
R2	13C	A29T1		thru		A38R8	6B
				A34C9		A38R9	7B
						A38R10	7B
						A38TP1	4A
						A38TP2	6A

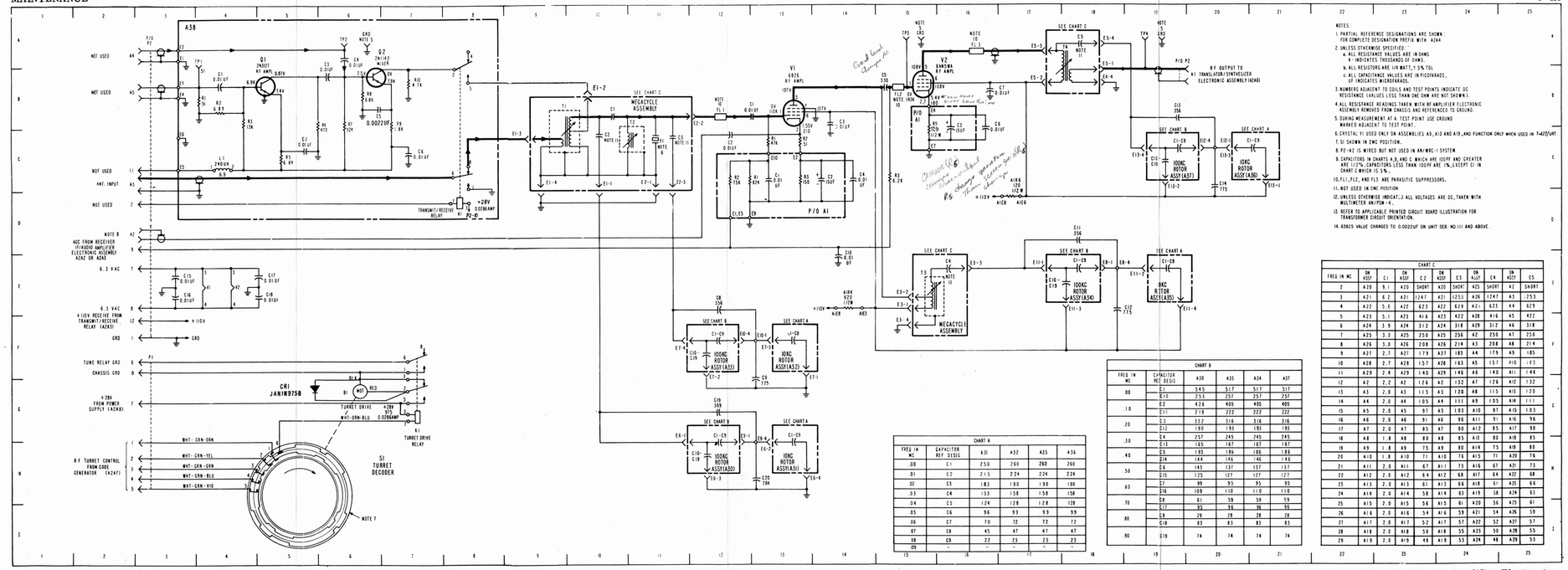

Figure 5-4A. RF Amplifier Electronic Assembly, Schematic Diagram

PART LOCATION INDEX

REF DESIG	LOC
C1	5D
HR1	10D
P1	4B, 4C, 4F, 21D, 21E, 21G, 21H
Q1	11H
R1	5I
RT1	5G
S1	12C
A1C1	19F
A1C2	19F
A1C3	20F
A1C4	18F
A1C5	19G
A1C6	16E
A1C7	16E
A1C8	16F
A1C9	17E
A1C10	16G
A1C11	18E
A1C12	17E
A1C13	15G
A1C14	16F
A1C15	13G
A1C16	13H
A1C17	12H
A1C18	13F
A1C19	12F
A1C20	12B
A1C21	11B
A1C22	14B
A1C23	14C
A1C24	16C
A1C25	15D
A1C26	11F
A1CR1	14C
A1CR2	16C
A1DS1	17D
A1L1	11F
A1L2	11A
A1Q1	19F
A1Q2	16E
A1Q3	16G
A1Q4	13H
A1Q5	13F
A1Q6	16D
A1Q7	15C
A1R1	19F
A1R2	18F
A1R3	19F
A1R4	18F
A1R5	15E
A1R6	15E
A1R7	16F
A1R8	17E
A1R9	16E
A1R10	16F
A1R11	16F
A1R12	15F
A1R13	16G
A1R14	13G
A1R15	12G
A1R16	12H
A1R17	13E
A1R18	13D
A1R19	12F
A1R20	13E
A1R21	12E
A1R22	11C
A1R23	11B
A1R24	13B
A1R25	13B
A1R26	16C
A1R27	16C
A1R28	15C
A1R29	15D
A1R30	16D
A1R31	14B
A1T1	18G
A1T2	15E
A1T3	18E
A1T4	14H
A1T5	14F
A1T6	14C
A1TP1	14C
A1TP2	18G
A2C1	6H
A2C2	7G
A2C3	7G
A2C4	8H
A2C5	8G
A2C6	10H
A2C12	9C
A2C13	9D
A2C40	10G
A2CR1	9G
A2CR2	10H
A2CR3	8C
A2CR4	8E
A2Q1	6G
A2Q2	7G
A2Q3	10G
A2Q6	9D
A2R1	6G
A2R2	6H
A2R3	7H
A2R4	7H
A2R6	8H
A2R7	6G
A2R8	9H
A2R9	10H
A2R10	10H
A2R11	9G
A2R12	9C
A2R17	9C
A2R18	6F
A2RT2	6F
A2T1	8G
A2T3	9D
A3C7	6C
A3C8	7E
A3C9	6E
A3C10	6D
A3CR5	6C
A3CR6	6D
A3Q5	7D
A3R14	7D
A3R15	6E
A3R16	6E
A3T2	7C
A3Y1	6E

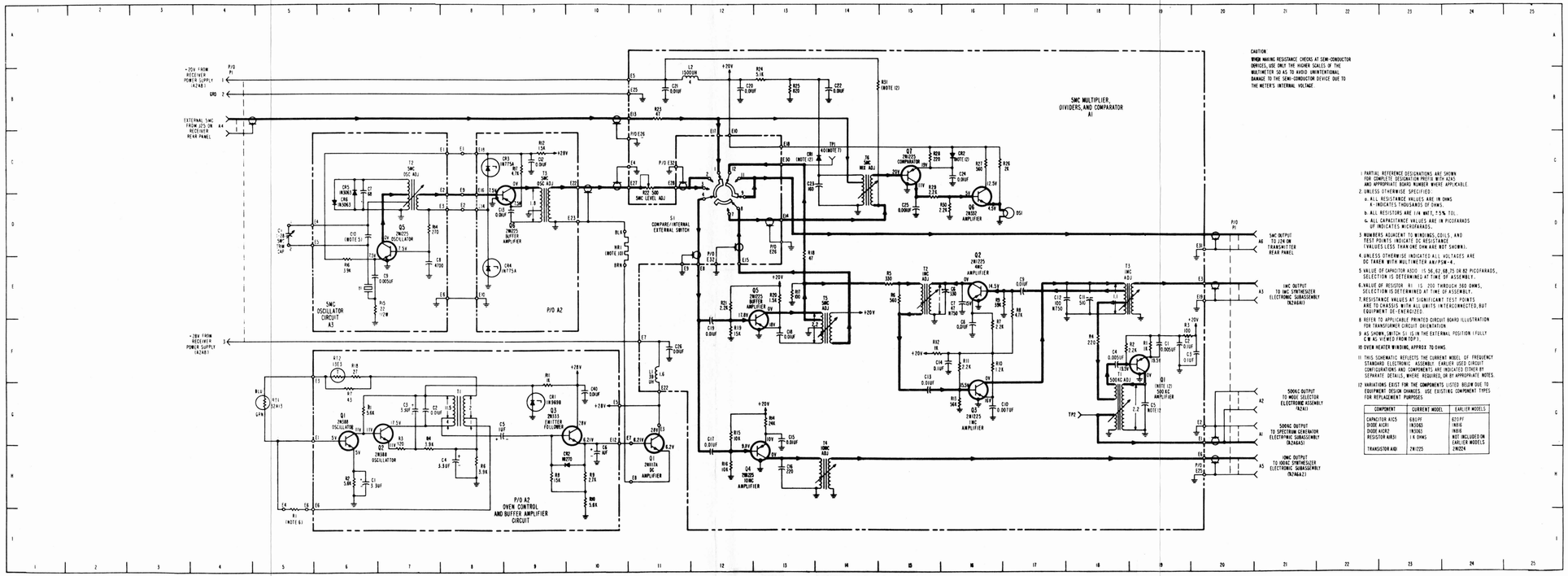

CAUTION

When making resistance checks at semi-conductor devices, use only the higher scales of the multimeter so as to avoid unintentional damage to the semi-conductor device due to the meters internal voltage.

Figure 5-5. Frequency Standard Electronic Assembly, Schematic Diagram

"Furnished under United States Government Contract No. NOBSR 93204. Shall not be either released outside the Government, or used, duplicated, or disclosed in whole or in part for manufacture or procurement, without the written permission of Frequency Electronics Inc., except for: (1) emergency repair or overhaul work by or for the Government, where the item or process concerned is not otherwise reasonably available to enable timely performance of the work; or (ii) release to a foreign government, as the interests of the United States may require; provided that in either case the release, use, duplication or disclosure hereof shall be subject to the foregoing limitations. This legend shall be marked on any reproduction hereof in whole or in part."

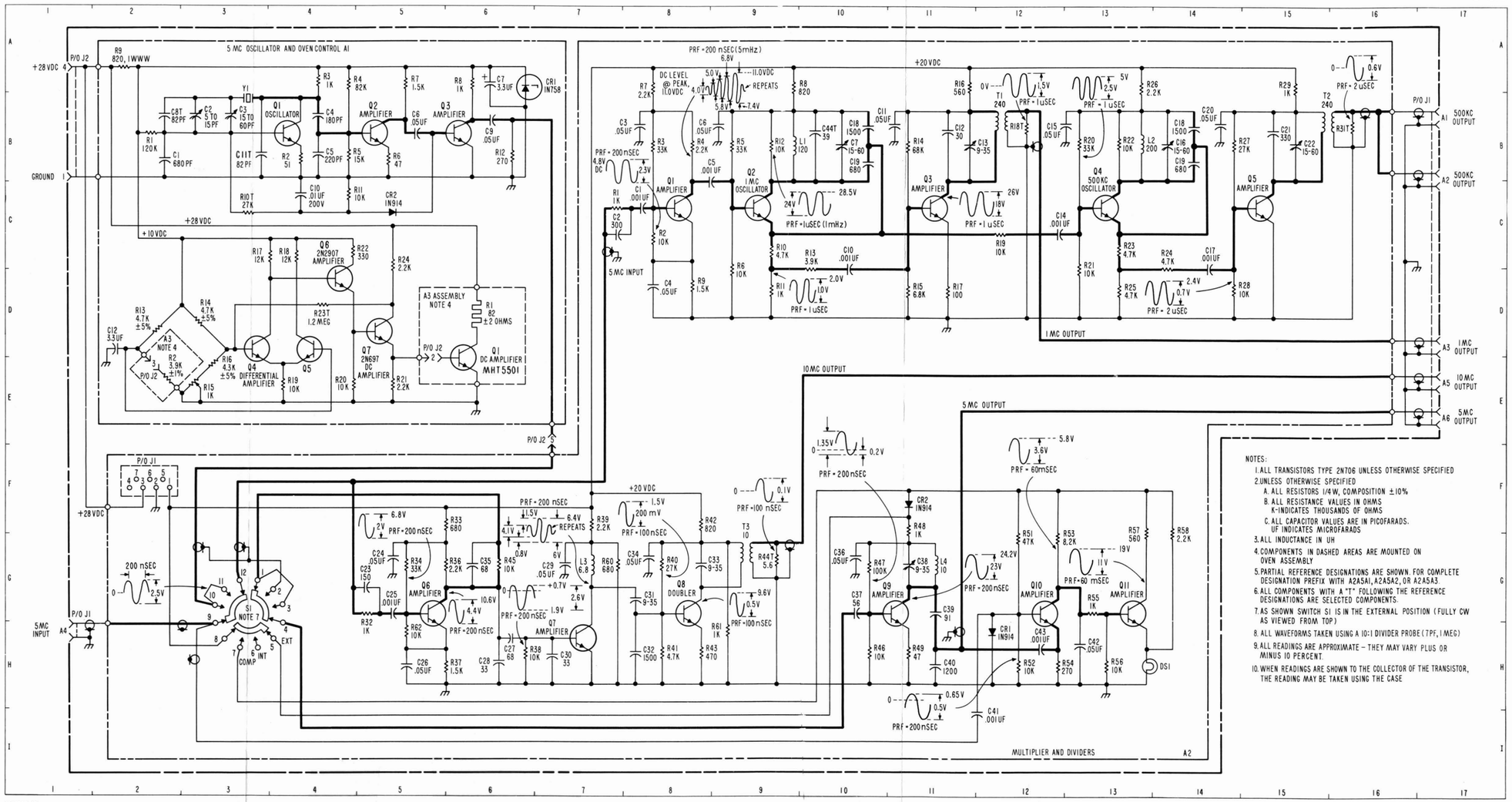

4026726-1T

CAUTION

When making resistance checks at semi-conductor devices, use only the higher scales of the multimeter so as to avoid unintentional damage to the semi-conductor device due to the meters internal voltage.

Figure 5-5A. Frequency Standard Electronic Assembly, Schematic Diagram (Used on R-1051B/URR)

PARTS LOCATION INDEX

REF DESIG	LOC	REF DESIG	LOC	REF DESIG	LOC	REF DESIG	LOC	REF DESIG	LOC
B1	3F	A1R9	8C	A2R7	18G	A3CR2	7G	A3R30	10F
C1	4C	A1R10	9C	A2R8	18G	A3CR2	6G	A3R31	11F
thru		A1R11	9B	A2R9	19F	A3CR4	9G	A3R32	14G
C17		A1R12	10B	A2R10	19G	A3CR5	10H	A3R33	5G
C1	4G	A1R13	9C	A2R11	19G	A3L1	5F	A3T1	13G
K1	3E, 3D	A1R14	9C	A2R12	20G	A3L2	5G	A3TP1	13F
L1	4G	A1R15	10C	A2R13	21G	A3L3	9H		
L2	15E	A1R16	11C	A2R14	22G	A3L4	13G		
P1	2D, 2E	A1R17	11C	A2R15	22F	A3Q1	7G		
	4G, 12C	A1R18	12C	A2R16	22G	A3Q2	8G		
S1	3E, 4C,	A1RT1	6B	A2R17	22G	A3Q3	9G		
	4E	A2C1	15G	A2R18	22H	A3Q4	13G		
Y1	4C	A2C2	16F	A2R19	22H	A3Q5	10F		
thru		A2C3	16G	A2R20	22H	A3Q6	11G		
Y17		A2C4	16F	A2R21	23G	A3R1	5F		
A1C18	11B	A2C5	19G	A2R22	15F	A3R2	6F		
A1C19	5B	A2C6	19G	A2RT1	22H	A3R3	7F		
A1C20	6B	A2C7	21G	A2T1	18G	A3R4	7G		
A1C21	7C	A2C8	21G	A2T2	19G	A3R5	6G		
A1C23	7B	A2C9	21H	A2TP1	18G	A3R6	7G		
A1C24	8C	A2C10	21F	A2TP2	21G	A3R7	7G		
A1C25	11B	A2C11	22H	A2TP3	23F	A3R8	8H		
A1C26	9C	A2C12	18G	A3C1	6F	A3R9	8F		
A1C27	10B	A2C13	20G	A3C2	6G	A3R10	8G		
A1C28	11C	A2C14	15F	A3C3	5G	A3R11	8G		
A1CR1	6A	A2CR1	20G	A3C4	7G	A3R12	9F		
A1CR2	6A	A2J1	23G	A3C5	7G	A3R13	9F		
A1CR3	5C	A2J2	22F	A3C6	8H	A3R14	9G		
A1L1	11A	A2L1	20G	A3C7	8G	A3R15	9G		
A1L2	8B	A2L2	21G	A3C8	8G	A3R16	9G		
A1L3	9C	A2L3	21G	A3C9	10H	A3R17	10H		
A1Q1	8C	A2L4	21H	A3C10	10G	A3R18	11G		
A1Q2	9C	A2P1	23G	A3C11	5F	A3R19	12G		
A1Q3	10C	A2P2	22F	A3C12	12G	A3R20	12G		
A1Q4	11C	A2Q1	16G	A3C13	12G	A3R21	11H		
A1R1	5D	A2Q2	19G	A3C14	11G	A3R22	10H		
A1R2	5B	A2Q3	22G	A3C15	13G	A3R23	11G		
A1R3	5A	A2R1	16F	A3C16	13G	A3R24	11G		
A1R4	6B	A2R2	16G	A3C17	14G	A3R25	12G		
A1R5	7A	A2R3	16F	A3C18	10F	A3R26	10F		
A1R6	7B	A2R4	16F	A3C19	11G	A3R27	10F		
A1R7	8B	A2R5	16G	A3C20	11F	A3R28	10G		
A1R8	7B	A2R6	17G	A3CR1	5F	A3R29	10G		

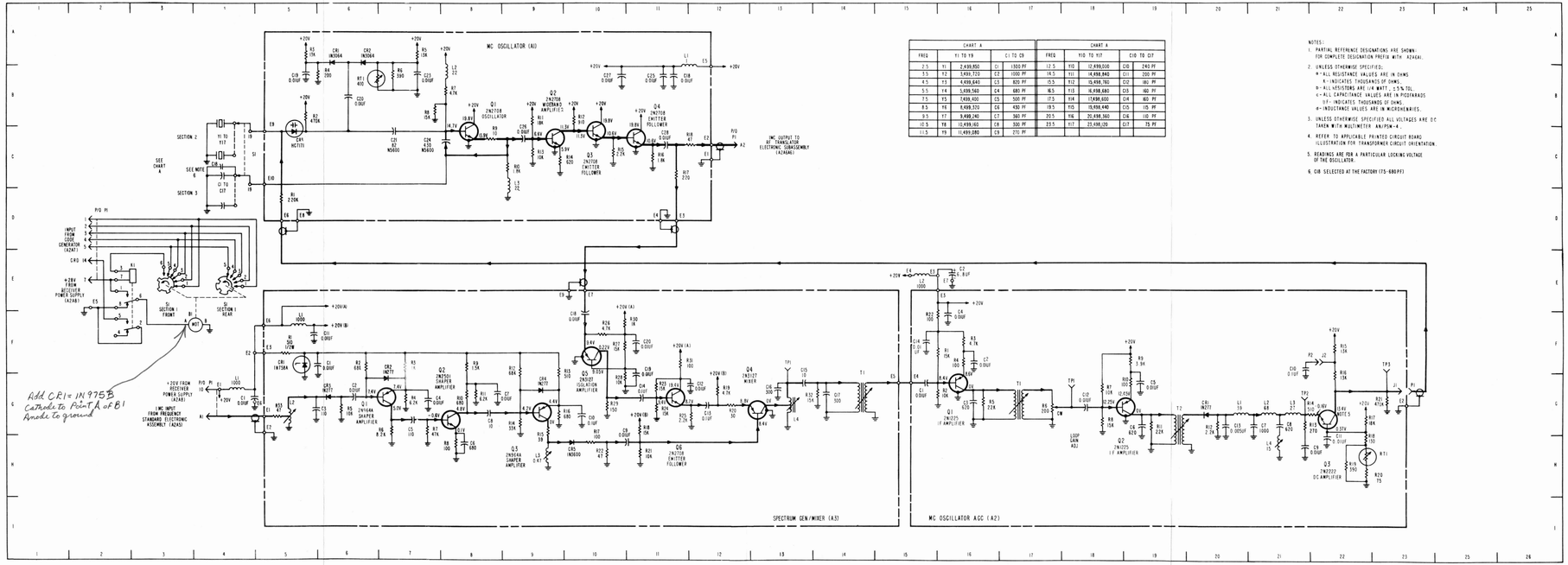

Figure 5-6. 1 MC Synthesizer Electronic Subassembly, Schematic Diagram

CAUTION

When making resistance checks at semi-conductor devices, use only the higher scales of the multimeter so as to avoid unintentional damage to the semi-conductor device due to the meters internal voltage.

PARTS LOCATION INDEX

REF DESIG	LOC
B1	3F
C1	4C
thru	
C17	
C1	4G
CR1	4F
K1	3E, 3D
L1	4G
L2	15E
P1	2D, 2E
	4G, 12C
S1	3E, 4C,
	4E
Y1	4C
thru	
Y17	
A1C18	11B
A1C19	5B
A1C20	6B
A1C21	7C
A1C23	7B
A1C24	8C
A1C25	11B
A1C26	9C
A1C27	10B
A1C28	11C
A1CR1	6A
A1CR2	6A
A1CR3	5C
A1L1	11A
A1L2	8B
A1L3	9C
A1Q1	8C
A1Q2	9C
A1Q3	10C
A1Q4	11C
A1R1	5D
A1R2	5B
A1R3	5A
A1R4	6B
A1R5	7A
A1R6	7B
A1R7	8B
A1R8	7B
A1R9	8C
A1R10	9C
A1R11	9B
A1R12	10B
A1R13	9C
A1R14	9C
A1R15	10C
A1R16	11C
A1R17	11C
A1R18	12C
A1RT1	6B
A2C1	15G
A2C2	16F
A2C3	16G
A2C4	16F
A2C5	19G
A2C6	19G
A2C7	21G
A2C8	21G
A2C9	21H
A2C10	21F
A2C11	22H
A2C12	18G
A2C13	20G
A2C14	15F
A2CR1	20G
A2J1	23G
A2J2	22F
A2L1	20G
A2L2	21G
A2L3	21G
A2L4	21H
A2P1	23G
A2P2	22F
A2Q1	16G
A2Q2	19G
A2Q3	22G
A2R1	16F
A2R2	16G
A2R3	16F
A2R4	16F
A2R5	16G
A2R6	17G
A2R7	18G
A2R8	18G
A2R9	19F
A2R10	19G
A2R11	19G
A2R12	20G
A2R13	21G
A2R14	22G
A2R15	22F
A2R16	22G
A2R17	22G
A2R18	22H
A2R19	22H
A2R20	22H
A2R21	23G
A2R22	15F
A2RT1	22H
A2T1	18G
A2T2	19G
A2TP1	18G
A2TP2	21G
A2TP3	23F
A3C1	6F
A3C2	6G
A3C3	5G
A3C4	7G
A3C5	7G
A3C6	8H
A3C7	8G
A3C8	8G
A3C9	10H
A3C10	10G
A3C11	5F
A3C12	12G
A3C13	12G
A3C14	11G
A3C15	13G
A3C16	13G
A3C17	14G
A3C18	10F
A3C19	11G
A3C20	11F
A3CR1	5F
A3CR2	6G
A3CR4	9G
A3CR5	10H
A3L1	5F
A3L2	5G
A3L3	9H
A3L4	13G
A3Q1	7G
A3Q2	8G
A3Q3	9G
A3Q4	13G
A3Q5	10F
A3Q6	11G
A3R1	5F
A3R2	6F
A3R3	7F
A3R4	7G
A3R5	6G
A3R6	7G
A3R7	7G
A3R8	8H
A3R9	8F
A3R10	8G
A3R11	8G
A3R12	9F
A3R13	9F
A3R14	9G
A3R15	9G
A3R16	9G
A3R17	10H
A3R18	11G
A3R19	12G
A3R20	12G
A3R21	11H
A3R22	10H
A3R23	11G
A3R24	11G
A3R25	12G
A3R26	10F
A3R27	10F
A3R28	10G
A3R29	10G
A3R30	10F
A3R31	11F
A3R32	14G
A3R33	5G
A3T1	13G
A3TP1	13F

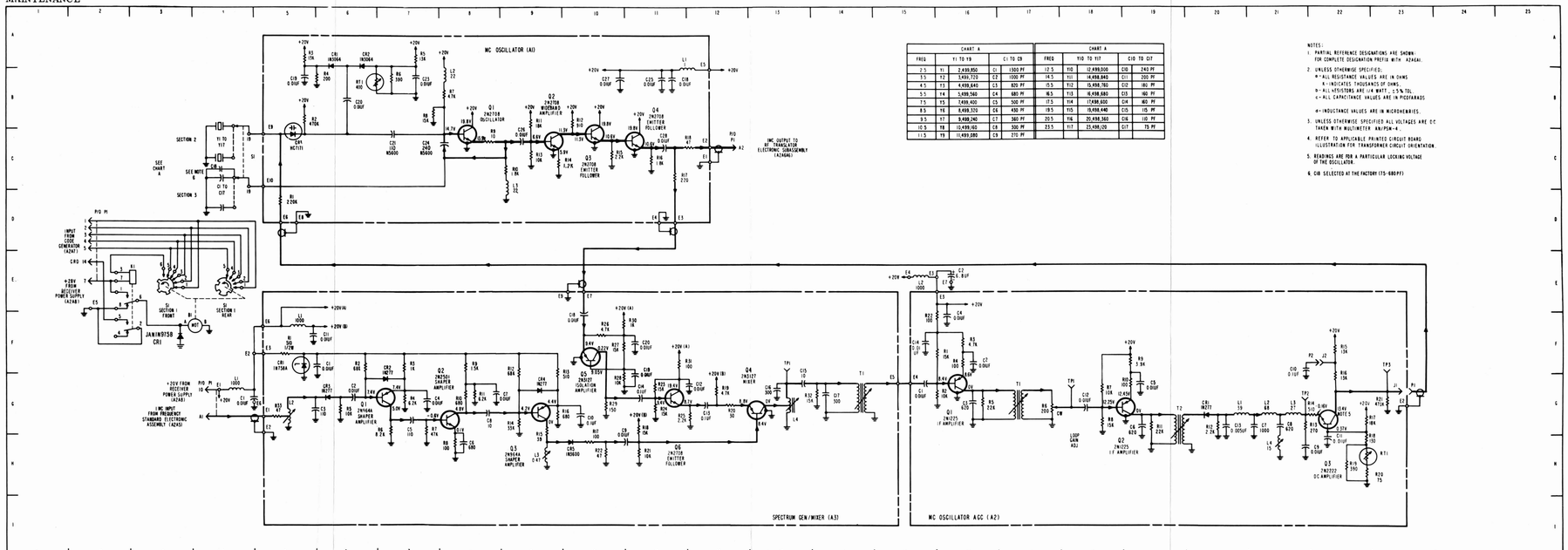

CHART A

FREQ	Y1 TO Y9		C1 TO C9
2.5	Y1	2,499,950	C1	1500 PF
3.5	Y2	3,499,720	C2	1000 PF
4.5	Y3	4,499,640	C3	820 PF
5.5	Y4	5,499,560	C4	680 PF
7.5	Y5	7,499,400	C5	500 PF
8.5	Y6	8,499,320	C6	430 PF
9.5	Y7	9,499,240	C7	360 PF
10.5	Y8	10,499,160	C8	300 PF
11.5	Y9	11,499,080	C9	270 PF

CHART A

FREQ	Y10 TO Y17		C10 TO C17
12.5	Y10	12,499,000	C10	240 PF
14.5	Y11	14,498,840	C11	200 PF
15.5	Y12	15,498,760	C12	180 PF
16.5	Y13	16,498,680	C13	160 PF
17.5	Y14	17,498,600	C14	140 PF
18.5	Y15	18,498,440	C15	115 PF
20.5	Y16	20,498,360	C16	110 PF
23.5	Y17	23,498,120	C17	75 PF

NOTES:
1. PARTIAL REFERENCE DESIGNATIONS ARE SHOWN. FOR COMPLETE DESIGNATION PREFIX WITH A2A6A1.
2. UNLESS OTHERWISE SPECIFIED:
   R = ALL RESISTANCE VALUES ARE IN OHMS
   K = INDICATES THOUSANDS OF OHMS.
   R = ALL RESISTORS ARE 1/4 WATT, ±5% TOL
   C = ALL CAPACITANCE VALUES ARE IN PICOFARADS
   L = INDUCTANCE VALUES ARE IN MICROHENRIES.
3. UNLESS OTHERWISE SPECIFIED ALL VOLTAGES ARE D.C TAKEN WITH MULTIMETER AN/PSM-4.
4. REFER TO APPLICABLE PRINTED CIRCUIT BOARD ILLUSTRATION FOR TRANSFORMER CIRCUIT ORIENTATION.
5. READINGS ARE FOR A PARTICULAR LOCKING VOLTAGE OF THE OSCILLATOR.
6. C1B SELECTED AT THE FACTORY (T5-68PF)

Figure 5-6A. 1 MC Synthesizer Electronic Subassembly, Schematic Diagram

5-24A, 5-24B

CAUTION

When making resistance checks at semi-conductor devices, use only the higher scales of the multimeter so as to avoid unintentional damage to the semi-conductor device due to the meters internal

PARTS LOCATION INDEX

REF DESIG	LOC	REF DESIG	LOC	REF DESIG	LOC	REF DESIG	LOC
P1	2E, 2F, 2H, 2I, 22B	A2R9	5G	A3Y1	14G	A4R16	14D
		A2T1	6G	A3Y2	20F	A4R17	14C
		A2T2	8G	A4C1	9B	A4R18	14E
S1	2C	A2T3	9G	A4C2	9D	A4R19	13E
Y1 thru Y10	2C	A2TP1	9G	A4C3	9A	A4R20	10C
A1C1	3C	A3C1	11H	A4C4	9B	A4R21	15B
A1C2	3D	A3C2	21 I	A4C5	10C	A4R22	15D
A1C3	4C	A3C3	20I	A4C6	9D	A4T1	12B
A1C4	5C	A3C4	11H	A4C7	10B	A4T2	13D
A1C5	5C	A3C5	12G	A4C8	10C	A4TP1	10B
A1C6	5C	A3C6	12H	A4C9	10D	A4TP2	11B
A1C7	6C	A3C7	13H	A4C10	11B	A4TP3	13B
A1C8	4D	A3C8	14H	A4C11	11B	A4TP4	11D
A1C9	7C	A3C9	14H	A4C12	11D	A4TP5	12D
A1C10	8C	A3C10	16G	A4C13	11D	A4TP6	13D
A1CR1	3C	A3C11	17H	A4C14	12B	A5C1	17B
A1CR2	4C	A3C12	17H	A4C15	12B	A5C2	17D
A1Q1	5C	A3C13	17G	A4C16	12D	A5C3	21C
A1Q2	7C	A3C14	18H	A4C17	12D	A5C4	**18C**
A1R1	4C	A3C15	18G	A4C18	13B	A5C5	**18B**
A1R2	4C	A3C16	19H	A4C19	13D	A5C6	19D
A1R3	4C	A3C17	20G	A4C20	14B	A5C7	19C
A1R4	4C	A3C18	19G	A4C21	14E	A5C8	20C
A1R5	5C	A3C19	20G	A4C22	9B	A5C9	20D
A1R6	6C	A3C20	20G	A4C23	14C	A5C10	21C
A1R7	5B	A3CR1	18H	A4C24	14D	A5C11	21C
A1R8	6C	A3CR2	18H	A4C25	14C	A5CR1	20D
A1R9	6B	A3CR3	19H	A4C26	15E	A5L1	21B
A1R10	6C	A3Q1	12H	A4C27	14C	A5L2	19C
A1R11	7C	A3Q2	16G	A4L1	11B	A5L3	20C
A1R12	3D	A3R1	11H	A4L2	11B	A5Q1	17D
A1R13	8C	A3R2	12H	A4L3	15B	A5Q2	18C
A1R14	7C	A3R3	11H	A4L4	11D	A5Q3	19C
A1RT1	3C	A3R4	12H	A4L5	12D	A5Q4	20C
A2C1	6G	A3R5	15H	A4L6	15D	A5R1	17D
A2C2	6H	A3R6	16G	A4Q1	10B	A5R2	17C
A2C3	5G	A3R7	16H	A4Q2	10D	A5R3	17C
A2C4	7H	A3R8	16H	A4Q3	14B	A5R4	18C
A2C5	7G	A3R9	17H	A4Q4	14D	A5R5	18D
A2C6	4G	A3R10	18G	A4R1	9B	A5R6	19C
A2C7	4G	A3R11	18H	A4R2	10C	A5R7	19D
A2C8	9G	A3R12	18H	A4R3	9A	A5R8	19D
A2C9	8G	A3R13	19H	A4R4	10B	A5R9	19C
A2FL1	8G	A3R14	19G	A4R5	10D	A5R10	19D
A2Q1	7H	A3R15	21G	A4R6	10B	A5R11	20C
A2Q2	5G	A3R16	12G	A4R7	10D	A5R12	19D
A2R1	7H	A3T1	13H	A4R8	10D	A5R13	19D
A2R2	7H	A3T2	15H	A4R9	12D	A5R14	19D
A2R3	7H	A3T3	19G	A4R10	13B	A5R15	20C
A2R4	5G	A3T4	21G	A4R11	13C	A5R16	21C
A2R5	4G	A3TP1	12G	A4R12	13D	A5R17	20D
A2R6	4G	A3TP2	15G	A4R13	14B	A5TP1	18D
A2R7	4G	A3TP3	17G	A4R14	14B		
A2R8	6F	A3TP4	21F	A4R15	14D		

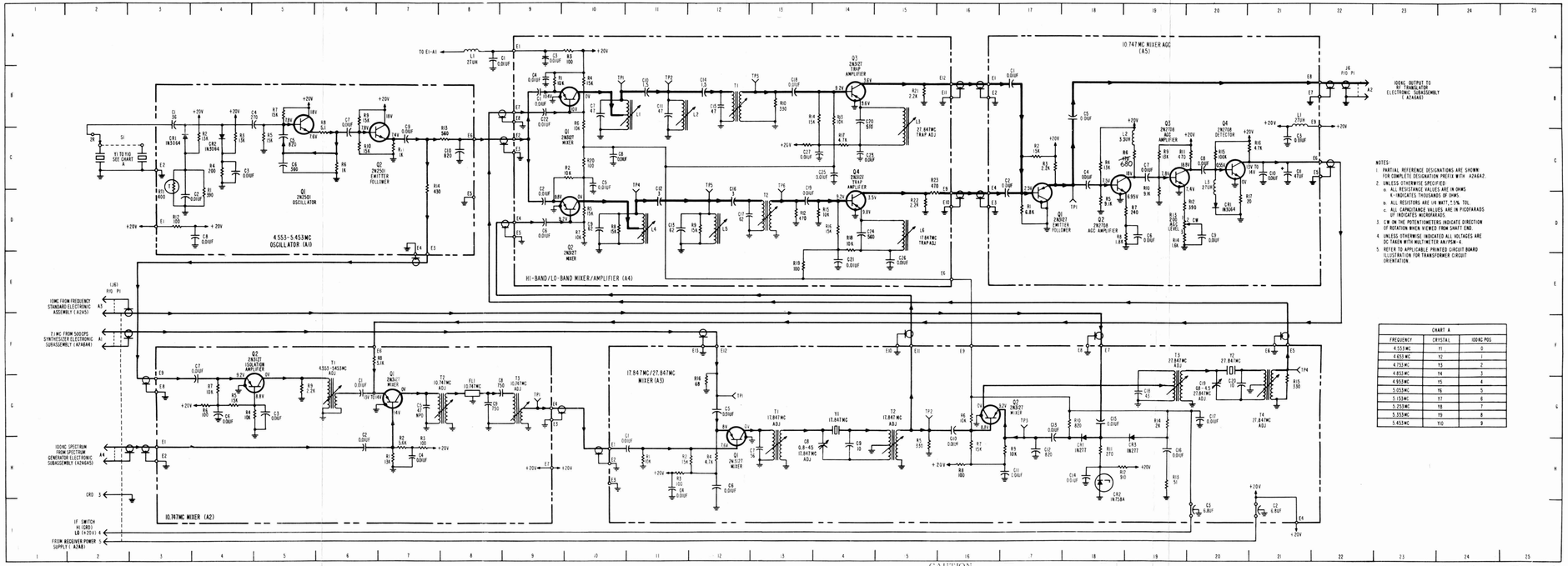

CAUTION

When making resistance checks at semi-conductor devices, use only the higher scales of the multimeter so as to avoid unintentional damage to the semi-conductor device due to the meters internal voltage.

Figure 5-7. 100 KC Synthesizer Electronic Subassembly, Schematic Diagram

PARTS LOCATION INDEX

REF DESIG	LOC	REF DESIG	LOC	REF DESIG	LOC	REF DESIG	LOC
P1	2E, 2F,	A2R9	5G	A3Y1	14G	A4R16	14D
	2H, 2I,	A2T1	6G	A3Y2	20F	A4R17	14C
	22B	A2T2	8G	A4C1	9B	A4R18	14E
S1	2C	A2T3	9G	A4C2	9D	A4R19	13E
Y1 thru Y10	2C	A2TP1	9G	A4C3	9A	A4R20	10C
A1C1	3C	A3C1	11H	A4C4	9B	A4R21	15B
A1C2	3D	A3C2	21I	A4C5	10C	A4R22	15D
A1C3	4C	A3C3	20I	A4C6	9D	A4T1	12B
A1C4	5C	A3C4	11H	A4C7	10B	A4T2	13D
A1C5	5C	A3C5	12G	A4C8	10C	A4TP1	10B
A1C6	5C	A3C6	12H	A4C9	10D	A4TP2	11B
A1C7	6C	A3C7	13H	A4C10	11B	A4TP3	13B
A1C8	4D	A3C8	14H	A4C11	11B	A4TP4	11D
A1C9	7C	A3C9	14H	A4C12	11D	A4TP5	12D
A1C10	8C	A3C10	16G	A4C13	11D	A4TP6	13D
A1CR1	3C	A3C11	17H	A4C14	12B	A5C1	17B
A1CR2	4C	A3C12	17H	A4C15	12B	A5C2	17D
A1Q1	5C	A3C13	17G	A4C16	12D	A5C3	21C
A1Q2	7C	A3C14	18H	A4C17	12D	A5C4	**18C**
A1R1	4C	A3C15	18G	A4C18	13B	A5C5	**18B**
A1R2	4C	A3C16	19H	A4C19	13D	A5C6	19D
A1R3	4C	A3C17	20G	A4C20	14B	A5C7	19C
A1R4	4C	A3C18	19G	A4C21	14E	A5C8	20C
A1R5	5C	A3C19	20G	A4C22	9B	A5C9	20D
A1R6	6C	A3C20	20G	A4C23	14C	A5C10	21C
A1R7	5B	A3CR1	18H	A4C24	14D	A5C11	21C
A1R8	6C	A3CR2	18H	A4C25	14C	A5CR1	20D
A1R9	6B	A3CR3	19H	A4C26	15E	A5L1	21B
A1R10	6C	A3Q1	12H	A4C27	14C	A5L2	19C
A1R11	7C	A3Q2	16G	A4L1	11B	A5L3	20C
A1R12	3D	A3R1	11H	A4L2	11B	A5Q1	17D
A1R13	8C	A3R2	12H	A4L3	15B	A5Q2	18C
A1R14	7C	A3R3	11H	A4L4	11D	A5Q3	19C
A1RT1	3C	A3R4	12H	A4L5	12D	A5Q4	20C
A2C1	6G	A3R5	15H	A4L6	15D	A5R1	17D
A2C2	6H	A3R6	16G	A4Q1	10B	A5R2	17C
A2C3	5G	A3R7	16H	A4Q2	10D	A5R3	17C
A2C4	7H	A3R8	16H	A4Q3	14B	A5R4	18C
A2C5	7G	A3R9	17H	A4Q4	14D	A5R5	19D
A2C6	4G	A3R10	18G	A4R1	9B	A5R6	19C
A2C7	4G	A3R11	18H	A4R2	10C	A5R7	19D
A2C8	9G	A3R12	18H	A4R3	9A	A5R8	19D
A2C9	8G	A3R13	19H	A4R4	10B	A5R9	19C
A2FL1	8G	A3R14	19G	A4R5	10D	A5R10	19D
A2Q1	7H	A3R15	21G	A4R6	10B	A5R11	20C
A2Q2	5G	A3R16	12G	A4R7	10D	A5R12	19D
A2R1	7H	A3T1	13H	A4R8	10D	A5R13	19D
A2R2	7H	A3T2	15H	A4R9	12D	A5R14	19D
A2R3	7H	A3T3	19G	A4R10	13B	A5R15	20C
A2R4	5G	A3T4	21G	A4R11	13C	A5R16	21C
A2R5	4G	A3TP1	12G	A4R12	13D	A5R17	20D
A2R6	4G	A3TP2	15G	A4R13	14B	A5TP1	18D
A2R7	4G	A3TP3	17G	A4R14	14B		
A2R8	6F	A3TP4	21F	A4R15	14D		

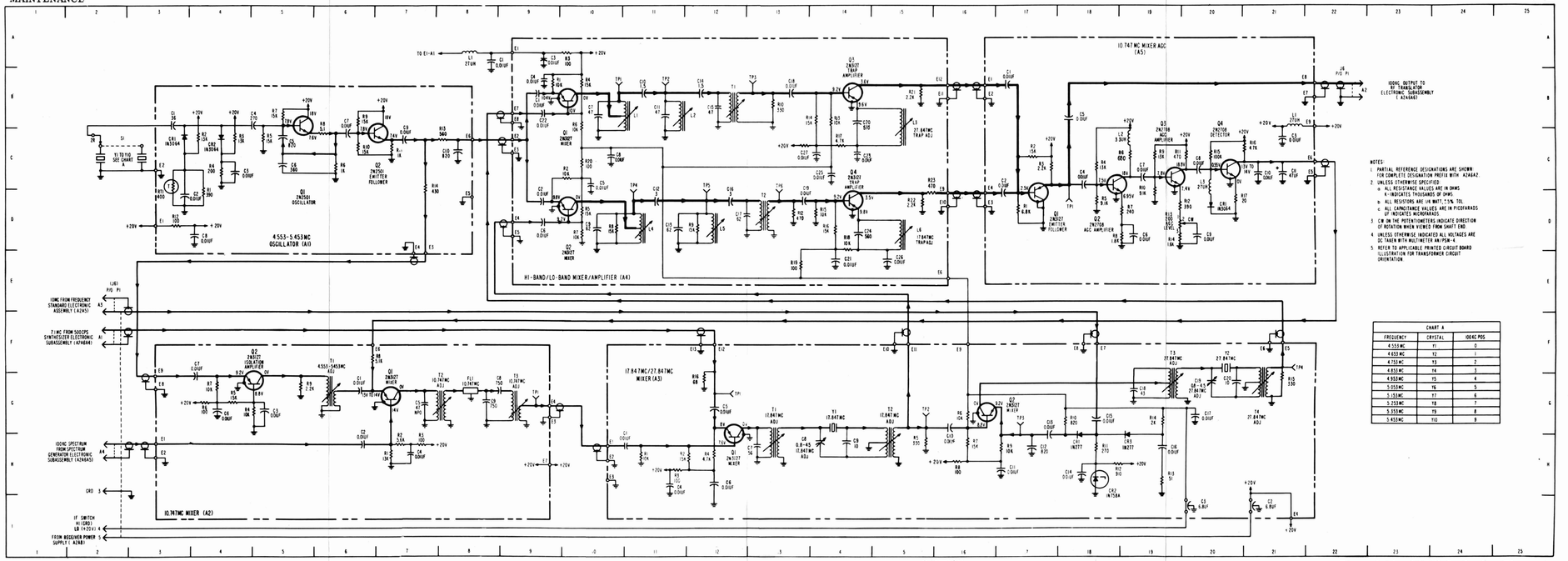

Figure 5-7A. 100 KC Synthesizer Electronic Subassembly, Schematic Diagram

CAUTION

When making resistance checks at semi-conductor devices, use only the higher scales of the multimeter so as to avoid unintentional damage to the semi-conductor device due to the meters internal voltage.

PARTS LOCATION INDEX

REF DESIG	LOC	REF DESIG	LOC	REF DESIG	LOC	REF DESIG	LOC	REF DESIG	LOC
C25	3E	A1R8	6B	A2R16	8G	A4C7	17G	A4Z3C27	14F
C26	3E	A1R9	7B	A2RT1	4H	A4C8	15G	A4Z3C28	15F
J1	3D	A1R10	7B	A2T1	8G	A4C9	14G	A4Z3Q6	15F
J3	15C	A1R11	4D	A3C46	10B	A4C10	19G	A4Z3R22	16F
J4	3E	A1R12	5D	A3C47	10C	A4C11	18F	A4Z3R23	15F
J5	3I	A1R13	5C	A3C48	10C	A4C12	19G	A4Z3R24	15F
J6	3A	A1R14	7A	A3C49	11C	A4C13	12G	A4Z3R25	15F
J7	21G	A1R15	8C	A3C50	12C	A4FL1	18H		
P1	9C	A1R16	8C	A3C51	12C	A4FL2	15G		
P2	9A	A1RT1	4D	A3C52	13C	A4L3	17F		
S1	2B	A1T1	8C	A3C53	13A	A4L4	12G		
S2	2G	A2C1	4G	A3C54	13C	A4Q8	17H		
Y1	2C,	A2C2	4G	A3C55	10C	A4Q9	19G		
thru	3C	A2C3	5G	A3C56	11C	A4R1	17I		
Y10		A2C4	5G	A3CR7	13C	A4R2	16H		
Y11	2G,	A2C5	4H	A3J8	9C	A4R3	16H		
thru	3G	A2C6	6G	A3J9	9A	A4R4	16H		
Y20		A2C7	4F	A3J10	9D	A4R5	17H		
A1C1	4B	A2C8	5H	A3L5	11C	A4R6	19H		
A1C2	4B	A2C9	7F	A3L6	12C	A4R7	18G		
A1C3	5C	A2C10	7G	A3L7	12C	A4R8	18G		
A1C4	5C	A2CR1	4H	A3Q11	10C	A4R9	18F		
A1C5	4D	A2CR2	5H	A3Q12	13B	A4R10	19F		
A1C6	6B	A2Q1	5E	A3R47	10B	A4R11	19F		
A1C7	4B	A2Q2	6G	A3R48	10B	A4R12	12F		
A1C8	5D	A2R1	4G	A3R49	13B	A4T1	20G		
A1C9	7B	A2R2	5F	A3R50	12B	A4Z1C43	13G		
A1C10	7C	A2R3	4H	A3R51	13D	A4Z1C44	13F		
A1C11	8C	A2R4	6G	A3R52	10C	A4Z1Q10	13G		
A1CR1	4C	A2R5	7G	A3R54	10C	A4Z1R41	13G		
A1CR2	5C	A2R6	6G	A3T3	14C	A4Z1R42	13G		
A1Q1	5B	A2R7	5G	A3TP1	10C	A4Z1R43	13F		
A1Q2	6B	A2R8	6F	A3TP2	11C	A4Z1R44	13G		
A1R1	4B	A2R9	7F	A3TP3	12C	A4Z2C29	11H		
A1R2	5B	A2R10	7F	A4C1	16G	A4Z2C30	10G		
A1R3	4B	A2R11	4H	A4C2	17I	A4Z2Q7	10G		
A1R4	6C	A2R12	5H	A4C3	16I	A4Z2R26	11G		
A1R5	7C	A2R13	5H	A4C4	17H	A4Z2R27	10H		
A1R6	6C	A2R14	7F	A4C5	19H	A4Z2R28	10G		
A1R7	5B	A2R15	8G	A4C6	19H	A4Z2R29	11G		

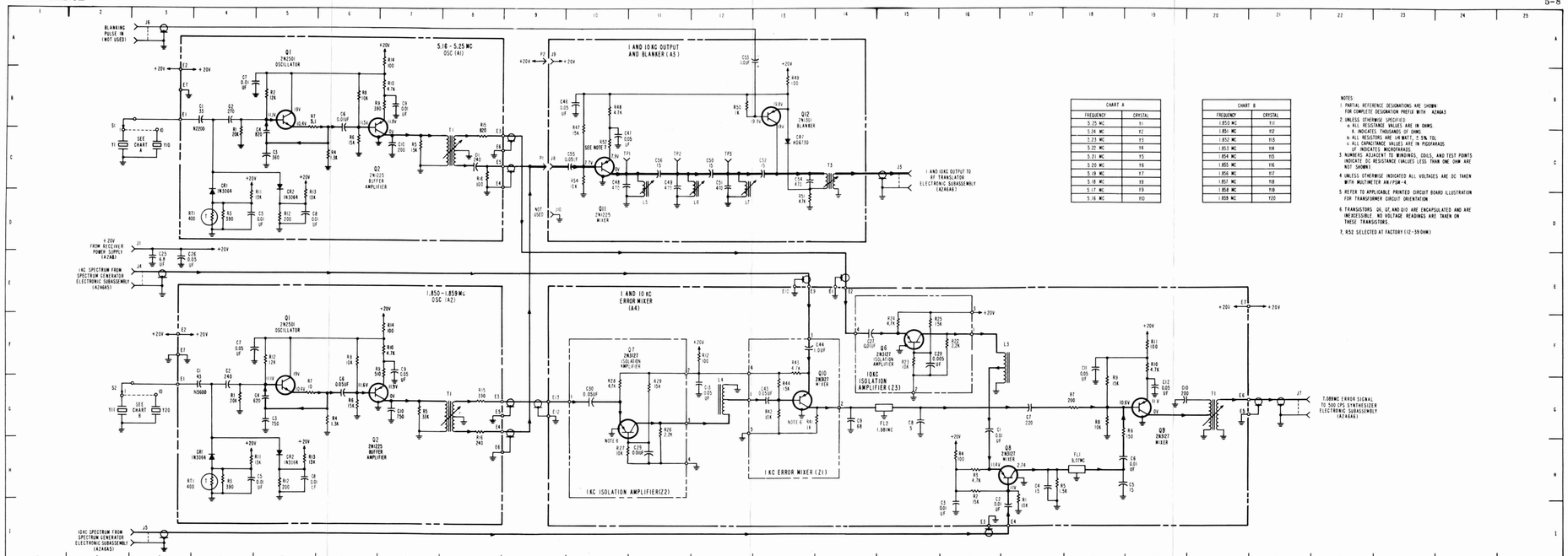

CHART A	
FREQUENCY	CRYSTAL
5.25 MC	Y1
5.24 MC	Y2
5.23 MC	Y3
5.22 MC	Y4
5.21 MC	Y5
5.20 MC	Y6
5.19 MC	Y7
5.18 MC	Y8
5.17 MC	Y9
5.16 MC	Y10

CHART B	
FREQUENCY	CRYSTAL
1.850 MC	Y11
1.851 MC	Y12
1.852 MC	Y13
1.853 MC	Y14
1.854 MC	Y15
1.855 MC	Y16
1.856 MC	Y17
1.857 MC	Y18
1.858 MC	Y19
1.859 MC	Y20

NOTES:
1. PARTIAL REFERENCE DESIGNATORS ARE SHOWN FOR COMPLETE DESIGNATION PREFIX WITH A2A6A5
2. UNLESS OTHERWISE SPECIFIED:
   a. ALL RESISTANCE VALUES ARE IN OHMS
      K INDICATES THOUSANDS OF OHMS
   b. ALL RESISTORS ARE 1/4 WATT, ± 5% TOL
   c. ALL CAPACITANCE VALUES ARE IN PICOFARADS
      UF INDICATES MICROFARADS
3. NUMBERS ADJACENT TO WINDINGS, COILS, AND TEST POINTS INDICATE DC RESISTANCE (VALUES LESS THAN ONE OHM ARE NOT SHOWN)
4. UNLESS OTHERWISE INDICATED ALL VOLTAGES ARE DC TAKEN WITH MULTIMETER AN/PSM-4
5. REFER TO APPLICABLE PRINTED CIRCUIT BOARD ILLUSTRATION FOR TRANSFORMER CIRCUIT ORIENTATION
6. TRANSISTORS Q6, Q7, AND Q10 ARE ENCAPSULATED AND ARE IRRESSISBLE. NO VOLTAGE READINGS ARE TAKEN ON THESE TRANSISTORS.
7. R52 SELECTED AT FACTORY (12-39 OHM)

CAUTION

When making resistance checks at semi-conductor devices, use only the higher scales of the multimeter so as to avoid unintentional damage to the semi-conductor device due to the meters internal voltage.

Figure 5-8. 1 and 10 KC Synthesizer Electronic Subassembly, Schematic Diagram

5-27, 5-28

PART LOCATION INDEX

REF DESIG	LOC	REF DESIG	LOC	REF DESIG	LOC	REF DESIG	LOC	REF DESIG	LOC	REF DESIG	LOC
P1	2B, 3E, 3H, 13B, 14F, 14G, 14H	A1R14	11G	A2C24	16B	A2R21	19C	A3C19	4E	A3R13	9C
		A1R15	11H	A2C26	20C	A2R22	19C	A3C20	10E	A3R14	9C
		A1R16	12G	A2CR1	14D	A2R23	19D	A3C21	10D	A3R15	9C
A1C1	12F	A1R17	7H	A2CR2	14B	A2R24	20D	A3C22	9D	A3R15	10B
A1C2	4H	A1R18	6G	A2CR3	17D	A2R25	21C	A3C23	12C	A3R17	10C
A1C3	9G	A1R19	6G	A2CR4	16D	A2R26	21C	A3C24	12D	A3R18	10D
A1C4	7H	A1R20	6G	A2CR5	19D	A2R27	21D	A3C25	6D	A3R19	11B
A1C5	9H	A1R21	5F	A2CR6	19D	A2R28	21D	A3C30	5B	A3R20	11B
A1C6	9H	A1R22	5H	A2CR7	19C	A2R29	22C	A3CR2	6B	A3R21	11E
A1C7	10H	A1R23	5G	A2CR8	21D	A2R30	21C	A3CR3	6B	A3R22	11D
A1C8	10G	A1R24	5G	A2CR9	21D	A2R31	22D	A3CR4	5C	A3R23	11E
A1C9	11G	A1R25	4G	A2CR10	24D	A2R32	22D	A3CR5	7D	A3R24	9D
A1C10	11H	A1R26	4H	A2CR11	23D	A2R33	23C	A3CR6	6D	A3R25	9D
A1C11	12H	A1T1	12H	A2CR12	17C	A2R34	23C	A3CR7	11B	A3R26	11C
A1C12	12G	A1T2	6G	A2L1	13D	A2R35	23D	A3CR8	10E	A3R27	11D
A1C13	12G	A1TP1	4H	A2Q1	16D	A2R36	23D	A3CR9	10D	A3R28	11D
A1C14	TG	A1TP2	9H	A2Q2	17D	A2R37	24C	A3J1	4D	A3R29	12D
A1C15	6G	A1TP3	7G	A2Q3	18D	A2R38	24C	A3J1	4A	A3R30	12D
A1C16	6G	A1TP4	9H	A2Q4	19D	A2R39	24D	A3J2	9C	A3R31	11E
A1C17	5G	A1TP5	(NOTE T)	A2Q5	21D	A2R40	24D	A3J2	4C	A3RT1	6D
A1C18	5G	A1TP6	6G	A2Q6	22D	A2R41	23E	A3J4	6C	A3T1	11D, 11E
A1C19	4G	A2C1	14D	A2Q7	22D	A2TP1	15C	A3J5	4B	A3TP2	4C
A1C20	4G	A2C2	14D	A2Q8	24D	A2TP2	15D	A3J6	12B		
A1FL1	9H	A2C3	13C	A2Q9	14C	A2TP3	20D	A3J7	5E		
A1L1	12F	A2C4	14C	A2R1	14D	A2TP4	23E	A3P1	4D		
A1L2	12G	A2C5	15C	A2R2	14C	A2TP6	22D	A3Q1	8B		
A1Q1	9H	A2C6	15C	A2R3	14B	A2C1	4B	A3Q2	8B		
A1Q2	10H	A2C7	16B	A2R4	15B	A2C2	5B	A3Q3	9C		
A1Q3	11H	A2C8	16D	A2R5	15C	A2C3	6B	A3Q4	10C		
A1Q4	6G	A2C9	17D	A2R6	15C	A2C4	7C	A3Q5	10B		
A1Q5	5G	A2C10	18D	A2R7	16B	A2C5	7C	A3Q6	11C		
A1R1	4H	A2C11	19C	A2R8	16C	A2C6	7B	A3Q7	11D		
A1R2	8H	A2C12	18D	A2R9	16C	A2C7	7B	A3R1	4A		
A1R3	8G	A2C13	19D	A2R10	16D	A2C8	6C	A3R2	7B		
A1R4	TG	A2C14	20D	A2R11	16D	A2C9	4B	A3R3	9C		
A1R5	8G	A2C15	22C	A2R12	17B	A2C10	5B	A3R4	8C		
A1R6	9H	A2C16	21D	A2R13	17C	A2C11	5B	A3R5	8B		
A1R7	10H	A2C17	22D	A2R14	17D	A2C12	4B	A3R6	7B		
A1R8	10H	A2C18	22D	A2R15	17D	A2C13	7D	A3R7	5D		
A1R9	10H	A2C19	24C	A2R16	18C	A2C14	9C	A3R8	5D		
A1R10	11G	A2C20	23D	A2R17	19C	A2C15	10D	A3R9	7D		
A1R11	11H	A2C21	24D	A2R18	18D	A2C16	12B	A3R10	7D		
A1R12	11G	A2C22	24E	A2R19	18D	A2C17	11D	A3R11	4C		
A1R13	11G	A2C23	23E	A2R20	19C	A2C18	11D	A3R12	4B		

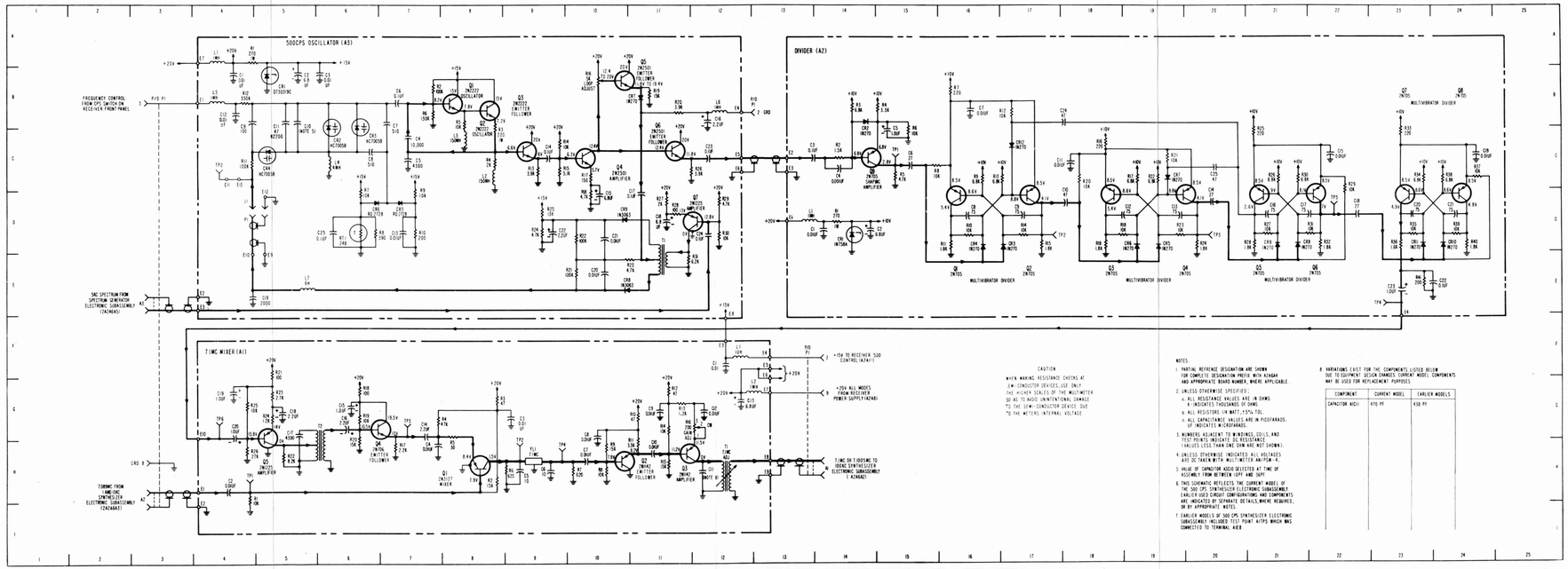

CAUTION

When making resistance checks at semi-conductor devices, use only the higher scales of the multimeter so as to avoid unintentional damage to the semi-conductor device due to the meters internal voltage.

NOTES:

1. PARTIAL REFERENCE DESIGNATION ARE SHOWN FOR COMPLETE DESIGNATION PREFIX WITH A3A6A4 AND APPROPRIATE BOARD NUMBER, WHERE APPLICABLE.
2. UNLESS OTHERWISE SPECIFIED:
   a. ALL RESISTANCE VALUES ARE IN OHMS K=INDICATES THOUSANDS OF OHMS
   b. ALL RESISTORS 1/4 WATT, ±5% TOL.
   c. ALL CAPACITANCE VALUES ARE IN PICOFARADS. (IF INDICATED, M=MICROFARADS.
3. NUMBERS ADJACENT TO WINDINGS, COILS, AND TEST POINTS INDICATE DC RESISTANCE. (VALUES LESS THAN ONE OHM ARE NOT SHOWN).
4. UNLESS OTHERWISE INDICATED, ALL VOLTAGES ARE DC TAKEN WITH MULTIMETER AN/PSM-4.
5. VALUE OF CAPACITOR A5C10 SELECTED AT TIME OF ASSEMBLY TO OBTAIN OFF AND ON.
6. THIS SCHEMATIC REFLECTS THE CURRENT MODEL OF THE 500 CPS SYNTHESIZER ELECTRONIC SUBASSEMBLY. EARLIER USED CIRCUIT CONFIGURATIONS AND COMPONENTS ARE INDICATED BY SEPARATE DETAILS, WHERE REQUIRED, OR BY APPROPRIATE NOTES.
7. EARLIER MODELS OF 500 CPS SYNTHESIZER ELECTRONIC SUBASSEMBLY INCLUDED TEST POINT A1TP5 WHICH WAS CONNECTED TO TERMINAL A1E8

CAUTION

When making resistance checks at semi-conductor devices, use only the higher scales of the multimeter so as to avoid unintentional damage to the semi-conductor device due to the meters internal voltage.

8. VARIATIONS EXIST FOR THE COMPONENTS LISTED BELOW DUE TO EQUIPMENT DESIGN CHANGES. CURRENT MODEL COMPONENTS MAY BE USED FOR REPLACEMENT PURPOSES

COMPONENT	CURRENT MODEL	EARLIER MODELS
CAPACITOR A4C41	470 PF	430 PF

Figure 5-9. 500 CPS Synthesizer Electronic Sub-assembly, Schematic Diagram

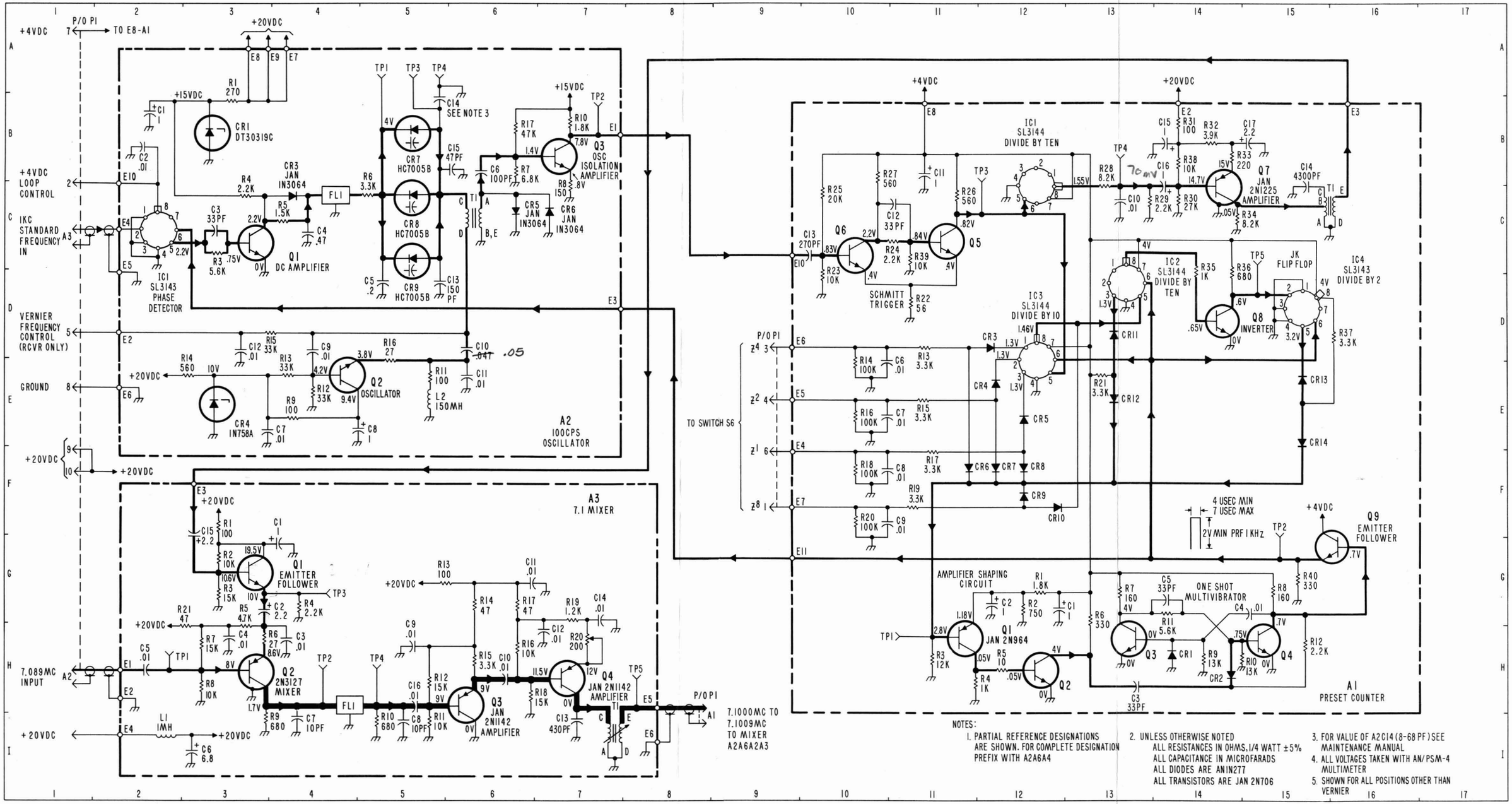

NOTES:

1. PARTIAL REFERENCE DESIGNATIONS ARE SHOWN. FOR COMPLETE DESIGNATION PREFIX WITH A2A6A4
2. UNLESS OTHERWISE NOTED
   ALL RESISTANCES IN OHMS, 1/4 WATT ±5%
   ALL CAPACITANCE IN MICROFARADS
   ALL DIODES ARE AN1N277
   ALL TRANSISTORS ARE JAN 2N706
3. FOR VALUE OF A2C14 (8-68 PF) SEE MAINTENANCE MANUAL
4. ALL VOLTAGES TAKEN WITH AN/PSM-4 MULTIMETER
5. SHOWN FOR ALL POSITIONS OTHER THAN VERNIER

4026726-13

Figure 5-9A. 100 CPS Synthesizer Electronic Subassembly, Schematic Diagram (Used on R-1051B/URR)

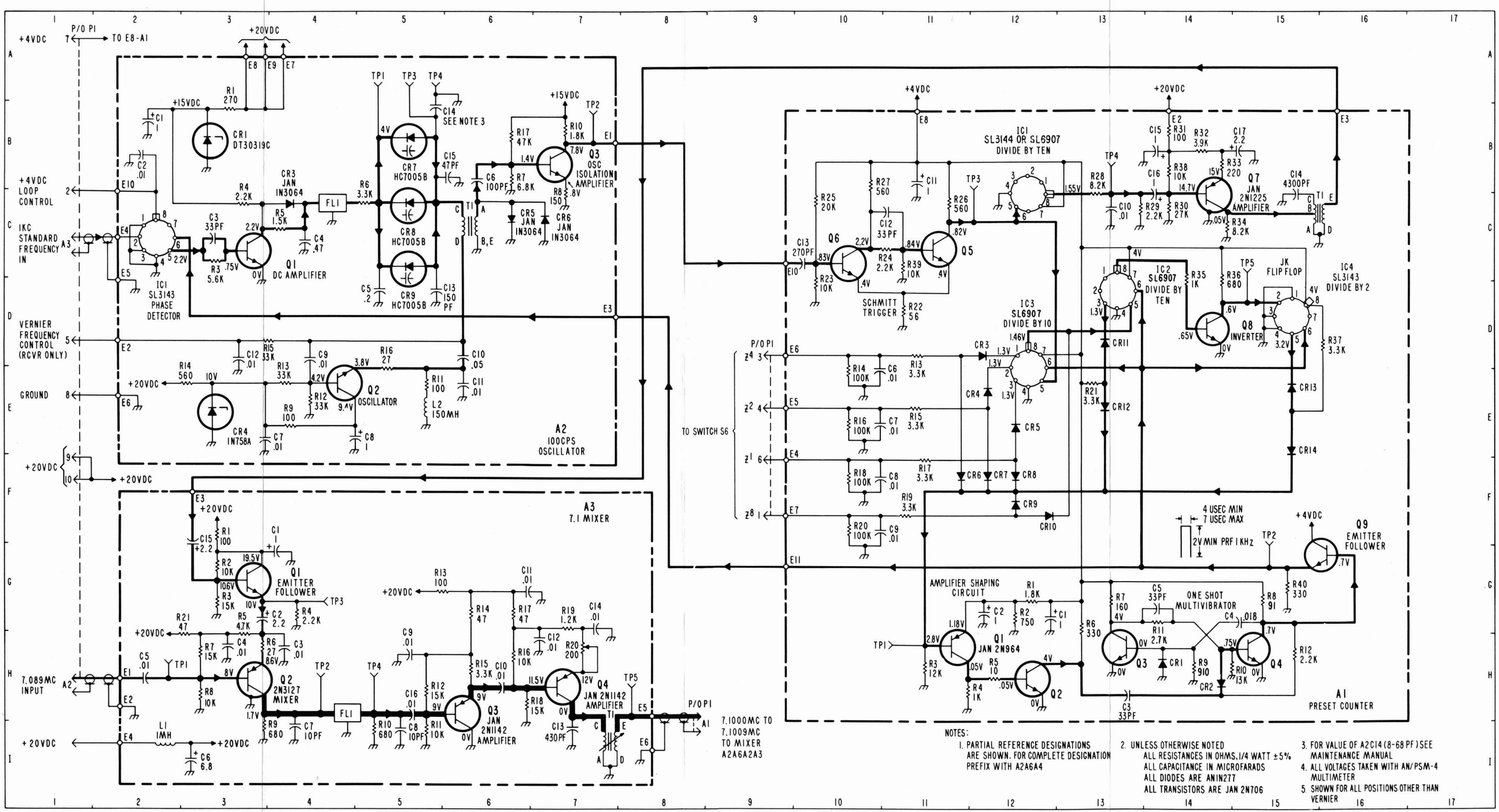

Figure 5-9B. 100 CPS Synthesizer Electronic Subassembly, Schematic Diagram (Used on R-1051B/URR)

PART LOCATION INDEX

REF DESIG	LOC	REF DESIG	LOC	REF DESIG	LOC	REF DESIG	LOC	REF DESIG	LOC	REF DESIG	LOC
A1C1	3D	A1R12	7G	A2Q2	8B	A3C5	13E	A3R17	15E	A4TP3	16G
A1C2	4D	A1R13	7H	A2Q3	11B	A3C6	13D	A3R18	15F	A4TP4	17G
A1C3	4E	A1R14	7H	A2Q4	10B	A3C7	13E	A3R19	16E	A4TP5	19H
A1C4	5E	A1R15	8G	A2Q5	12B	A3C8	14E	A3R20	16F		
A1C5	6E	A1R16	8H	A2Q6	13B	A3C9	15F	A3R21	16E		
A1C6	7F	A1R17	9G	A2R1	7A	A3C10	14D	A3R22	16D		
A1C7	7H	A1R18	9G	A2R2	7A	A3C11	15F	A3R23	18D		
A1C8	6D	A1R19	9G	A2R3	8A	A3C12	16E	A3R24	17D		
A1C9	8G	A1R20	9H	A2R4	8B	A3C13	17D	A3R25	17F		
A1C10	8H	A1R21	9G	A2R5	7C	A3C14	17E	A3R26	18D		
A1C11	8H	A1R22	11I	A2R6	7B	A3C15	11D	A3R27	19E		
A1C12	8H	A1R23	10G	A2R7	8A	A3C16	18E	A3T1	18E		
A1C13	9H	A1R24	10I	A2R8	8B	A3C17	19E	A3TP1	13E		
A1C14	9H	A1R25	11I	A2R9	9B	A3CR1	11D	A3TP2	14E		
A1C15	9H	A1T1	8H	A2R11	10A	A3CR2	12F	A3TP3	14E		
A1C16	9I	A1T2	12H	A2R12	10B	A3CR3	13F	A3TP4	16F		
A1C17	11I	A1TP1	5E	A2R13	10B	A3CR4	15F	A3TP5	16D		
A1C18	11H	A1TP2	6E	A2R14	10C	A3CR5	14E	A3TP6	17E		
A1C19	12I	A1TP3	7G	A2R15	10C	A3J2	10D	A4C1	14G		
A1CR1	4D	A1TP4	7F	A2R16	10A	A3J4	19E	A4C2	14H		
A1CR2	5D	A1TP5	7H	A2R18	10C	A3L1	11D	A4C3	15H		
A1CR3	5D	A1TP6	8G	A2R19	11B	A3L2	18E	A4C4	17G		
A1CR4	9H	A2C1	6A	A2R20	11C	A3Q1	12E	A4C5	17G		
A1J3	3E	A2C2	7A	A2R21	12B	A3Q2	13E	A4C6	18H		
A1J6	13I	A2C3	8B	A2R22	12A	A3Q3	15E	A4C7	17H		
A1L1	3D	A2C4	8C	A2R23	13A	A3Q4	14E	A4J1	19H		
A1L2	4E	A2C5	8B	A2R24	13A	A3Q5	16E	A4L1	14G		
A1L5	10H	A2C6	9A	A2R25	12C	A3Q6	17E	A4Q1	15H		
A1Q1	5E	A2C7	9B	A2R26	14E	A3R1	11D	A4Q2	16H		
A1Q2	7E	A2C8	10B	A2R27	14B	A3R2	12D	A4Q3	18G		
A1Q3	6E	A2C9	11C	A2R28	14B	A3R2	12D	A4R1	14H		
A1Q4	7H	A2C10	9A	A2R29	14B	A3R4	12E	A4R2	14H		
A1Q5	8G	A2C11	10C	A2R30	11B	A3R5	12F	A4R3	16G		
A1Q6	9H	A2C12	12B	A2T1	13B	A3R6	12E	A4R4	15H		
A1R1	3D	A2C13	13A	A2TP1	9B	A3R7	13D	A4R5	16H		
A1R2	4D	A2C14	13B	A2TP2	9B	A3R8	13F	A4R6	15G		
A1R3	5E	A2C15	12B	A2TP3	9D	A3R9	13F	A4R7	16G		
A1R4	7D	A2C16	14B	A2TP4	11C	A3R10	13F	A4R8	16G		
A1R5	7D	A2CR1	7A	A2TP5	11A	A3R11	15D	A4R9	17H		
A1R6	6D	A2CR2	8C	A2TP6	12B	A3R12	15E	A4R10	18G		
A1R7	6E	A3CR3	8C	A3C1	12D	A3R13	14F	A4R11	18G		
A1R8	7F	A2CR4	9A	A3C2	12D	A3R14	14F	A4R12	18G		
A1R9	6G	A2J5	15B	A3C3	12F	A3R15	14F	A4R13	19H		
A1R10	6H	A2L1	6A	A3C4	11F	A3R16	14E	A4T1	18H		
A1R11	7G	A2Q1	7B					A4TP1	14G		
								A4TP2	16G		

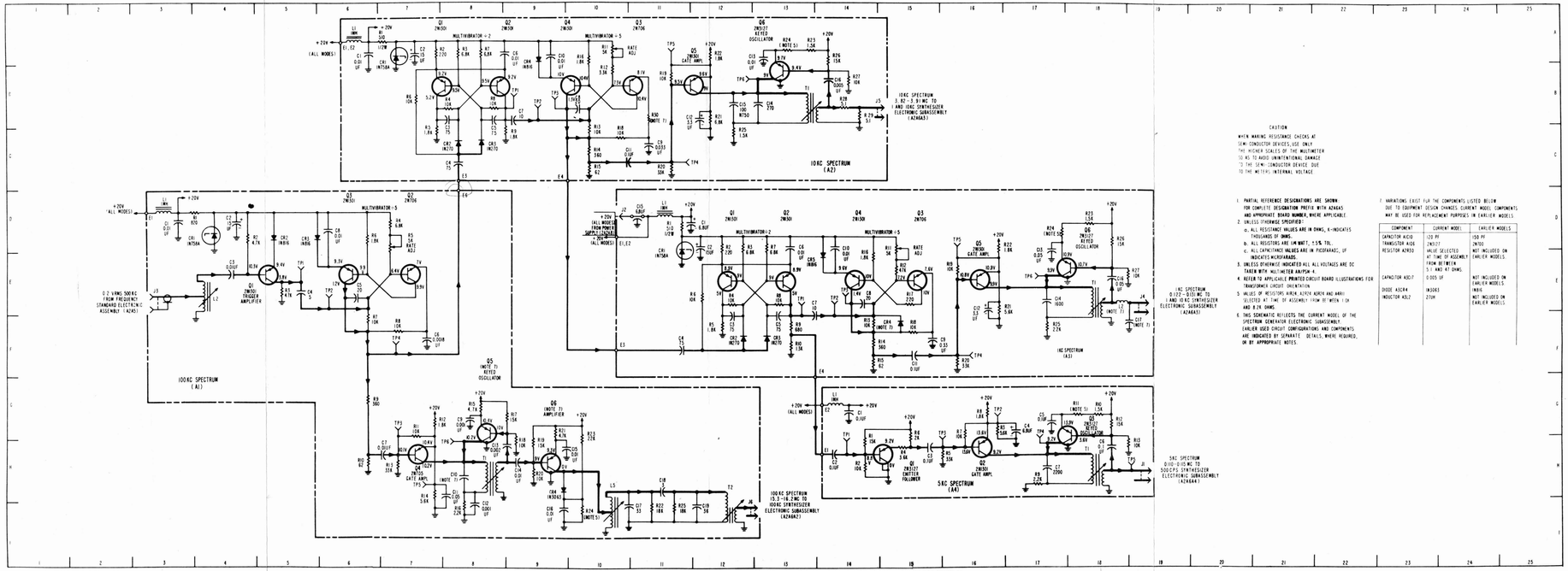

CAUTION

When making resistance checks at semi-conductor devices, use only the higher scales of the multimeter so as to avoid unintentional damage to the semi-conductor device due to the meters internal voltage.

Figure 5-10. Spectrum Generator Electronic Subassembly, Schematic Diagram

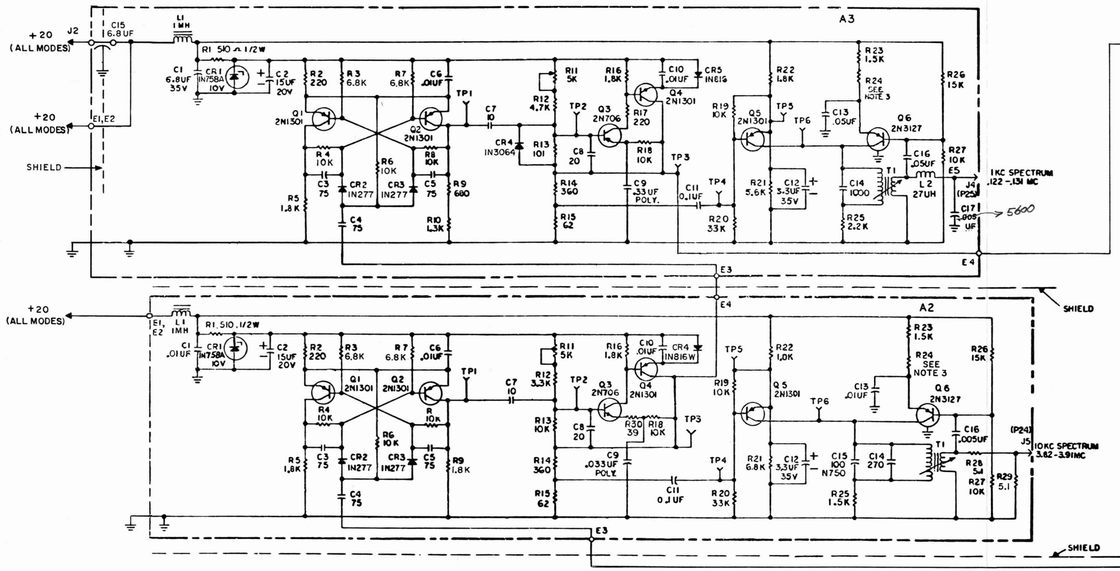

NOTES:

1. PARTIAL REFERENCE DESIGNATIONS ARE SHOWN FOR COMPLETE DESIGNATION PREFIX WITH UNIT NUMBER OR SUBASSEMBLY DESIGNATION A2A6A5.
2. UNLESS OTHERWISE SPECIFIED:
   a. ALL RESISTORS ARE IN OHMS
   b. ALL RESISTORS ARE 5%, 1/4W
   c. ALL CAPACITORS ARE IN MICROMICROFARADS
3. R24 SELECTED AT FACTORY FROM VALUES BETWEEN 1.0K TO 8.2K

CAUTION

When making resistance checks at semi-conductor devices, use only the higher scales of the multimeter so as to avoid unintentional damage to the semi-conductor device due to the meters internal voltage.

Figure 5-10A. Spectrum Generator Electronic Subassembly (of R-1051B/URR), Schematic Diagram

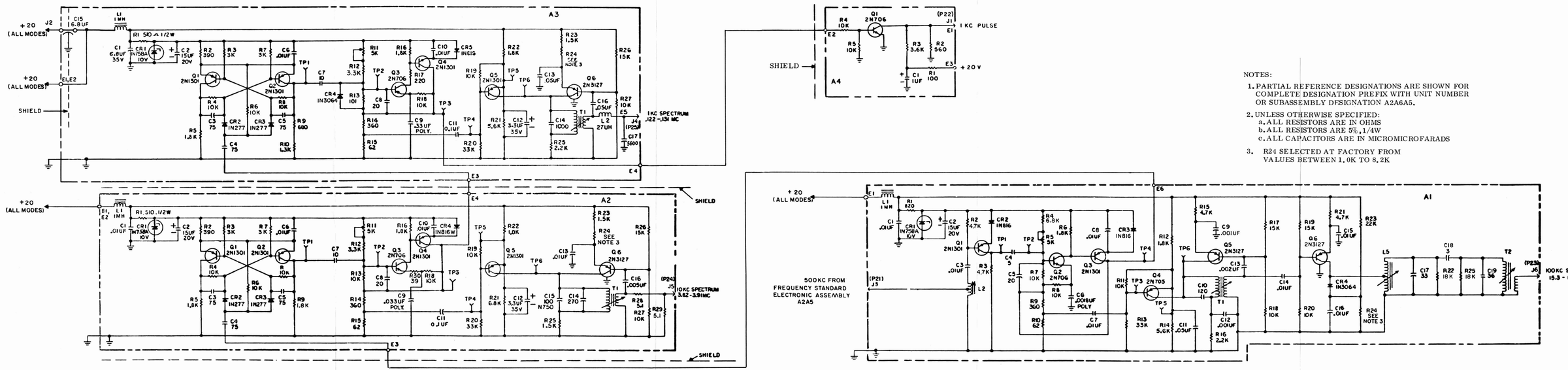

NOTES:

1. PARTIAL REFERENCE DESIGNATIONS ARE SHOWN FOR COMPLETE DESIGNATION PREFIX WITH UNIT NUMBER OR SUBASSEMBLY DESIGNATION A2A6A5.
2. UNLESS OTHERWISE SPECIFIED:
   a. ALL RESISTORS ARE IN OHMS
   b. ALL RESISTORS ARE 5%, 1/4W
   c. ALL CAPACITORS ARE IN MICROMICROFARADS
3. R24 SELECTED AT FACTORY FROM VALUES BETWEEN 1.0K TO 8.2K

CAUTION

When making resistance checks at semi-conductor devices, use only the higher scales of the multimeter so as to avoid unintentional damage to the semi-conductor device due to the meters internal voltage.

Figure 5-10B. Spectrum Generator Electronic Subassembly (of R-1051B/URR), Schematic Diagram

PARTS LOCATION INDEX

REF DESIG	LOC	REF DESIG	LOC	REF DESIG	LOC
P2	2B, 2E	A1CR3	16B	A1R15	11E
P3	19B, 19F, 19H	A1CR4	13B	A1R16	12E
		A1CR5	11C	A1R17	10G
A1C1	18B	A1CR6	9B	A1R18	10E
A1C2	17C	A1CR7	13C	A1R19	10E
A1C3	17B	A1CR8	6C	A1R20	11D
A1C4	14F	A1CR9	18E	A1R21	11D
A1C5	17F	A1CR10	17E	A1R22	11E
A1C6	8E	A1CR11	16H	A1R23	5G
A1C7	16G	A1FL1	14B	A1R24	5H
A1C8	15G	A1FL2	14C	A1R25	4G
A1C9	14B	A1FL3	7B	A1R26	5G
A1C10	14C	A1J1	3F	A1R27	16H
A1C11	13B	A1J2	3G	A1R28	6E
A1C12	13C	A1J3	3G	A1R29	5E
A1C13	18D	J1J4	18D	A1R30	5E
A1C14	11B	A1J5	3C	A1R31	5D
A1C15	10B	A1J6	18H	A1R32	5D
A1C16	5D	A1J7	18B	A1R33	5C
A1C17	9D	A1L1	18D	A1R34	5C
A1C18	10E	A1L2	16E	A1R35	4B
A1C19	11D	A1L3	10C	A1R36	5B
A1C20	11F	A1L4	8C	A1R37	6A
A1C21	4F	A1L5	7C	A1R38	6B
A1C22	11E	A1L6	3C	A1R39	6B
A1C23	10G	A1L7	18B	A1R40	9B
A1C24	12D	A1L8	18H	A1R41	10C
A1C25	12E	A1L9	11E	A1R42	10B
A1C26	5G	A1Q1	17B	A1R43	11B
A1C27	5G	A1Q2	16E	A1R44	12A
A1C28	6D	A1Q3	11E	A1R45	12B
A1C29	6E	A1Q4	12B	A1R46	12B
A1C30	6E	A1Q5	5B	A1R47	13C
A1C31	5E	A1Q6	5E	A1R48	14C
A1C32	4E	A1Q7	5G	A1R49	14C
A1C33	17H	A1Q8	8F	A1R50	13C
A1C34	17H	A1Q9	12F	A1R51	11D
A1C35	17H	A1R1	18B	A1R52	18F
A1C36	17H	A1R2	17B	A1R53	10G
A1C37	18B	A1R3	17C	A1R54	10E
A1C38	4D	A1R4	17F	A1R55	3F
A1C39	10C	A1R5	17F	A1R56	4H
A1C40	5B	A1R6	14E	A1T1	4E
A1C41	5B	A1R7	15E	A1TP1	16B
A1C42	17D	A1R8	14E	A1TP2	12B
A1C43	17D	A1R9	15F	A1TP3	9B
A1C45	10B	A1R10	7E	A1TP4	6B
A1C46	3D	A1R11	7E	A1TP5	18E
A1CR1	17B	A1R12	8E	A1TP6	18B
A1CR2	16C	A1R13	4F	A1TP7	4B
		A1R14	11D	A1TP8	3E

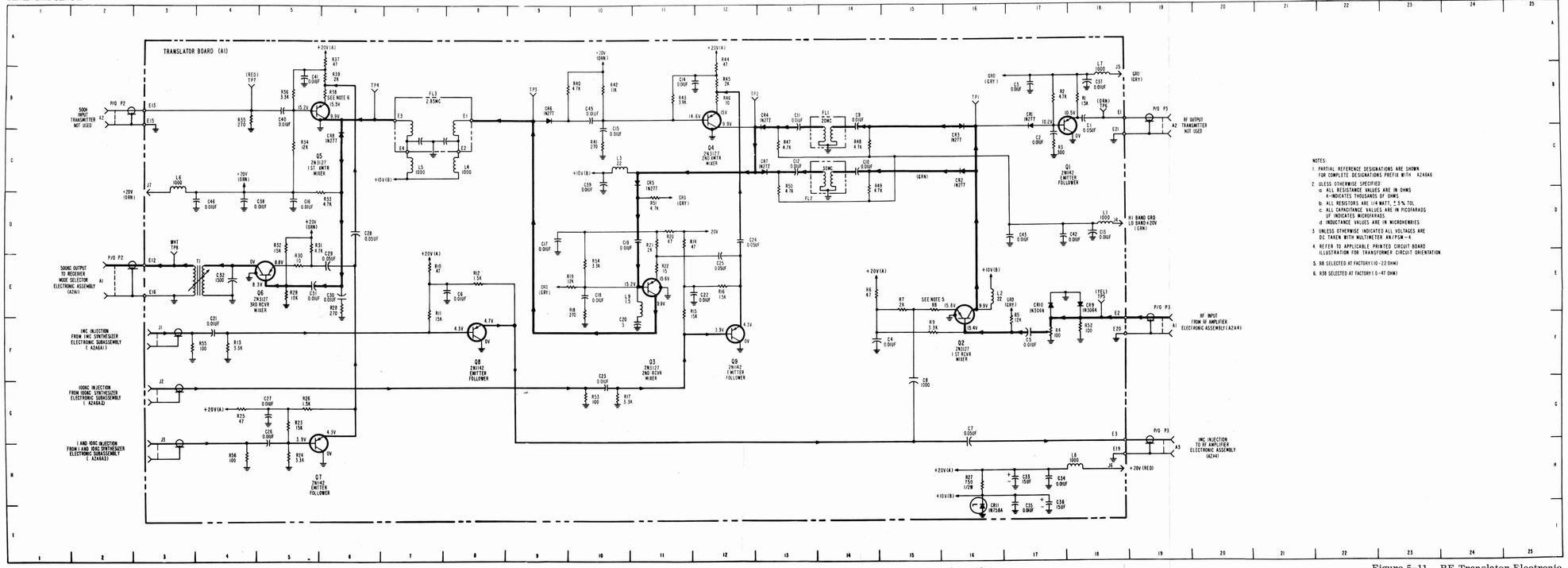

CAUTION

When making resistance checks at semi-conductor devices, use only the higher scales of the multimeter so as to avoid unintentional damage to the semi-conductor device due to the meters internal voltage.

Figure 5-11. RF Translator Electronic Subassembly, Schematic Diagram

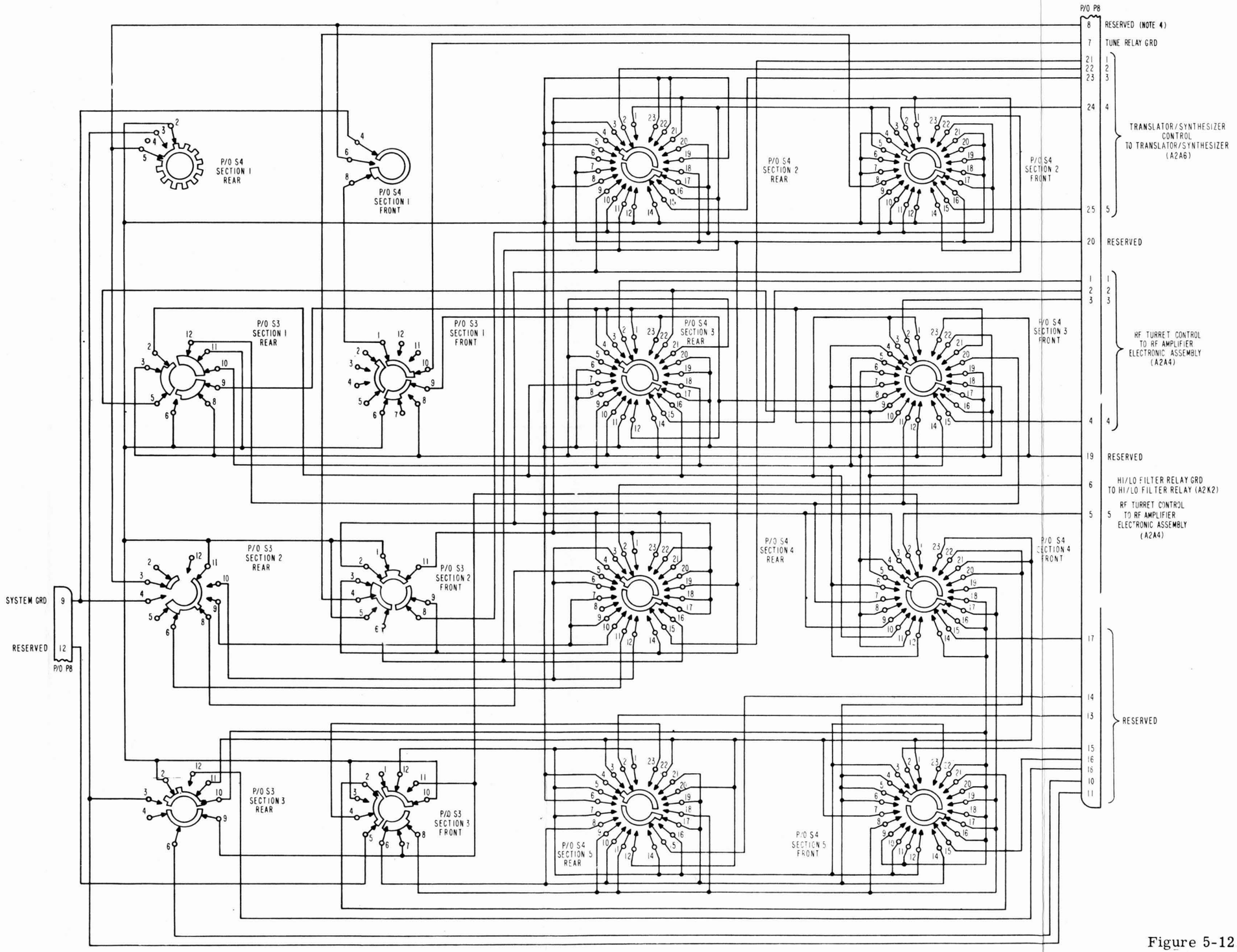

NOTES:
1. PARTIAL REFERENCE DESIGNATIONS ARE SHOWN. FOR COMPLETE DESIGNATION PREFIX WITH 2A2A7
2. SWITCH SECTIONS VIEWS ARE SHOWN FROM THE REAR AND ARE IN 00 MC POSITION.
3. ROTATION IN ALL VIEWS IS CCW IN 30 DEGREE THROWS TO MAXIMUM POSITION OF 29MC.
4. OPERATE GRD LINE IS DISABLED IN POSITIONS 00 AND 01MC.

Figure 5-12. Code Generator Electronic Assembly, Schematic Diagram

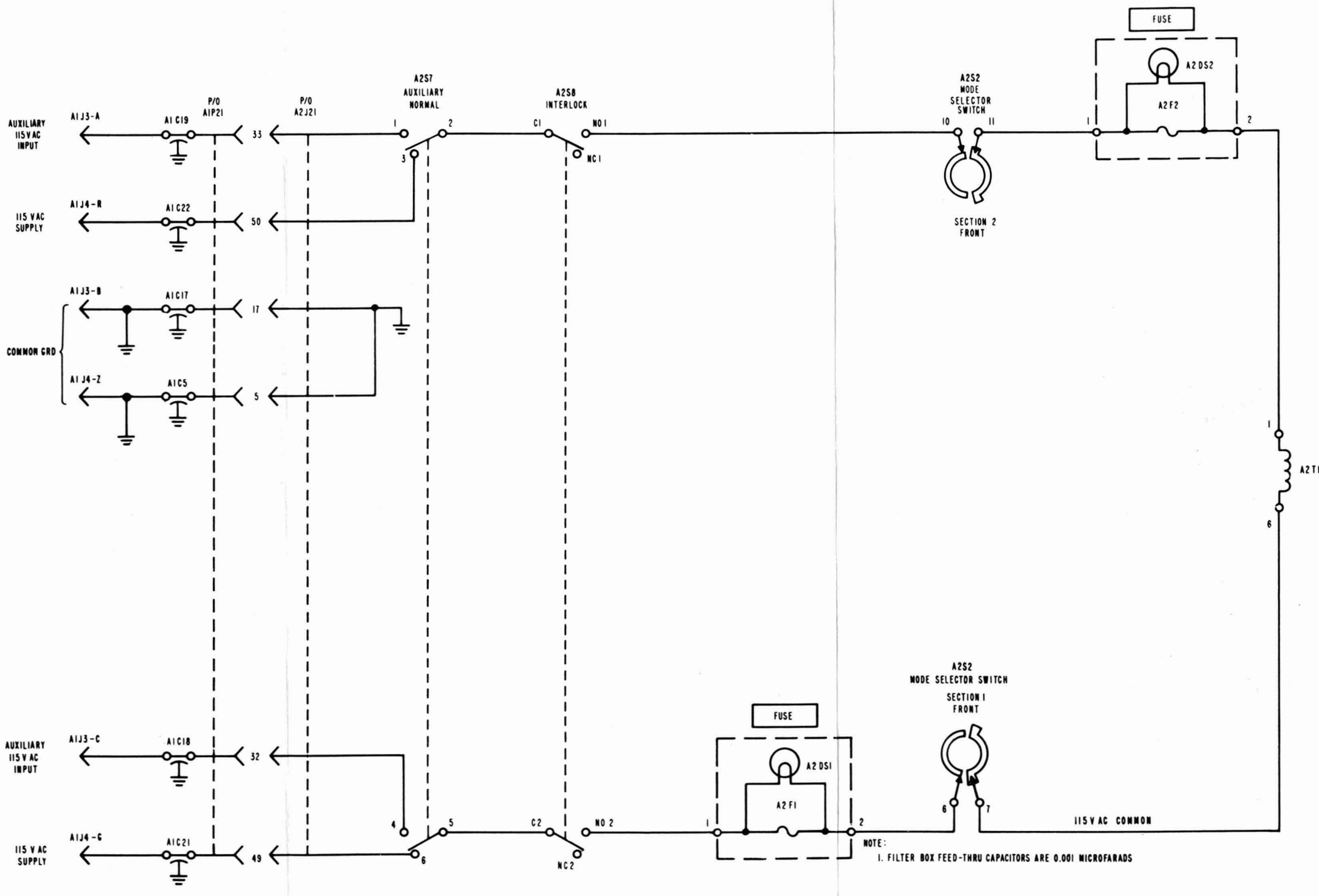

Figure 5-13. Radio Receiver R-1051/URR, Primary Power Distribution Diagram

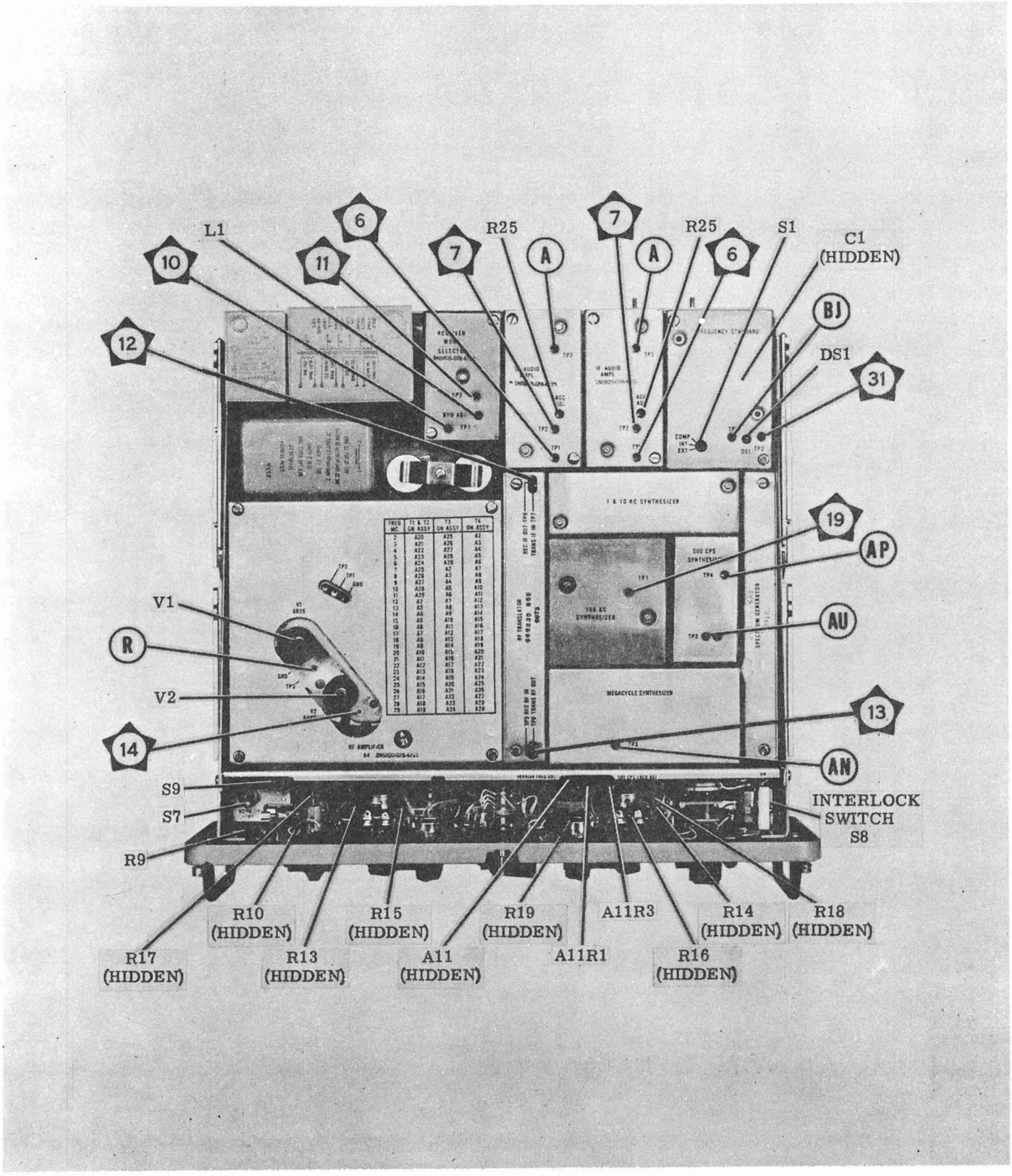

Figure 5-14. Radio Receiver R-1051/URR, Top View, Case Removed, Component and Test Point Location

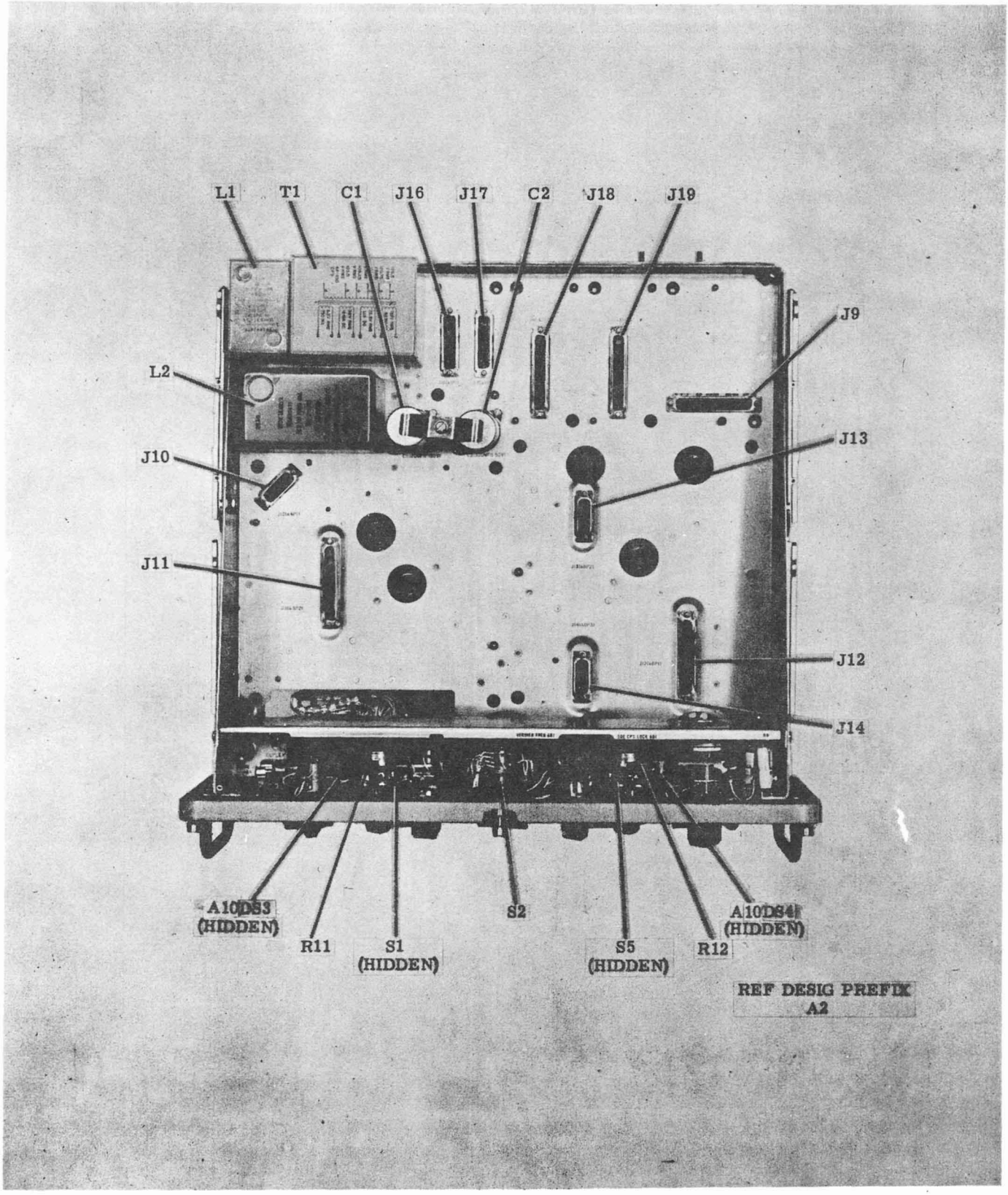

Figure 5-15. Radio Receiver R-1051/URR, Chassis, Top View, Component Location

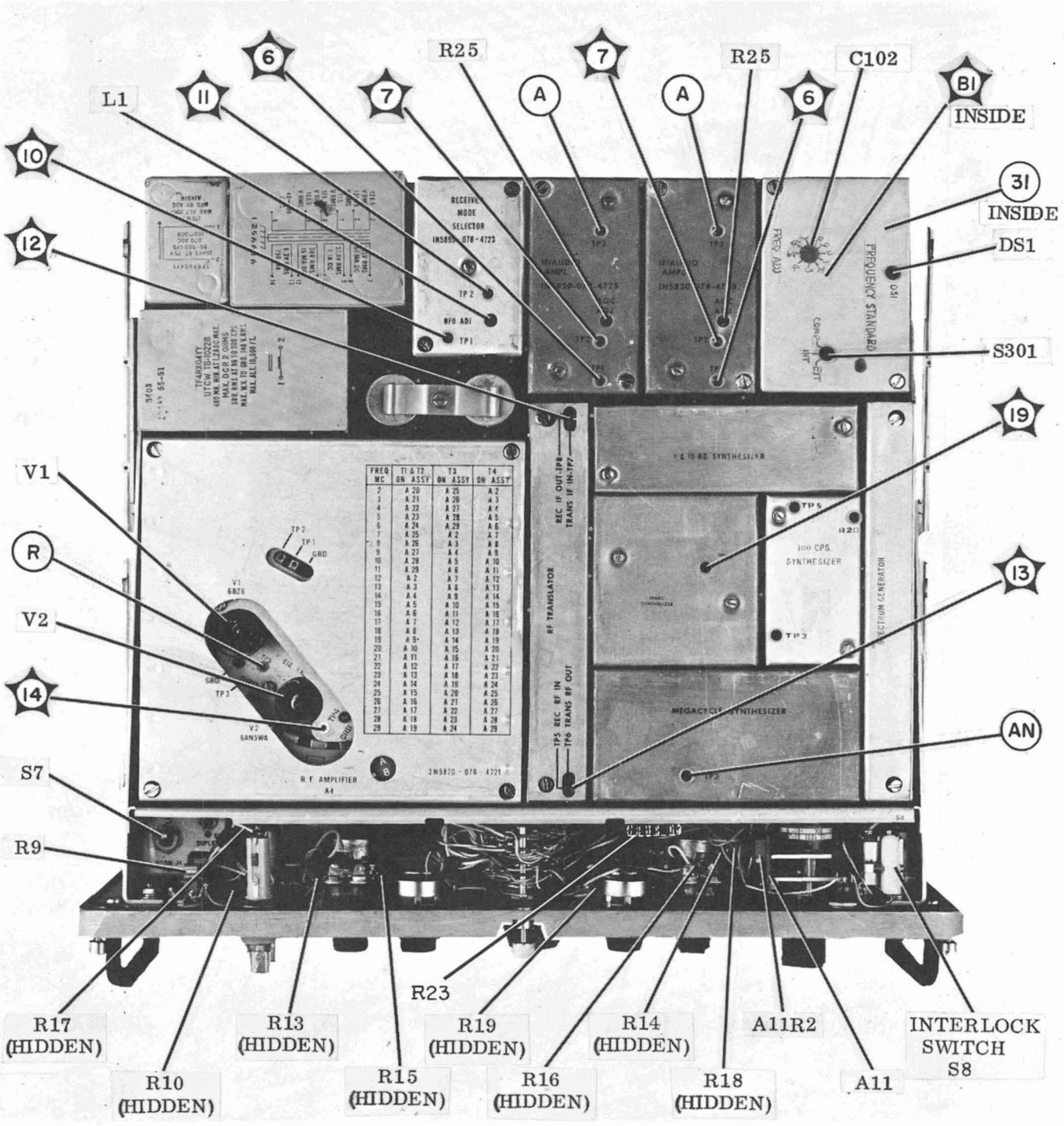

Figure 5-15A. Radio Receiver R-1051B/URR, Top View, Case Removed, Component and Test Point Location

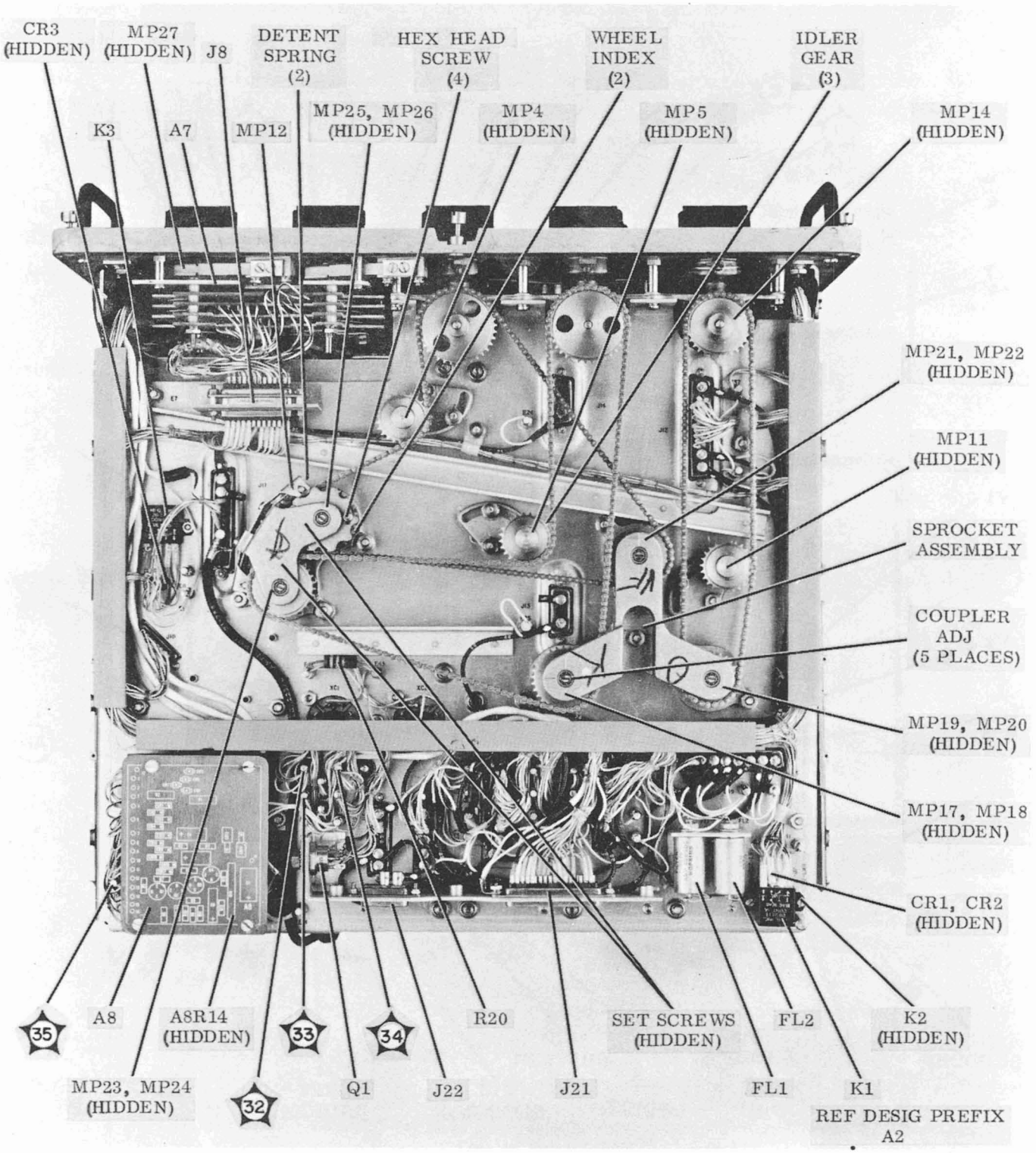

Figure 5-15B. Radio Receiver R-1051B/URR, Bottom View, Case Removed, Component and Test Point Location

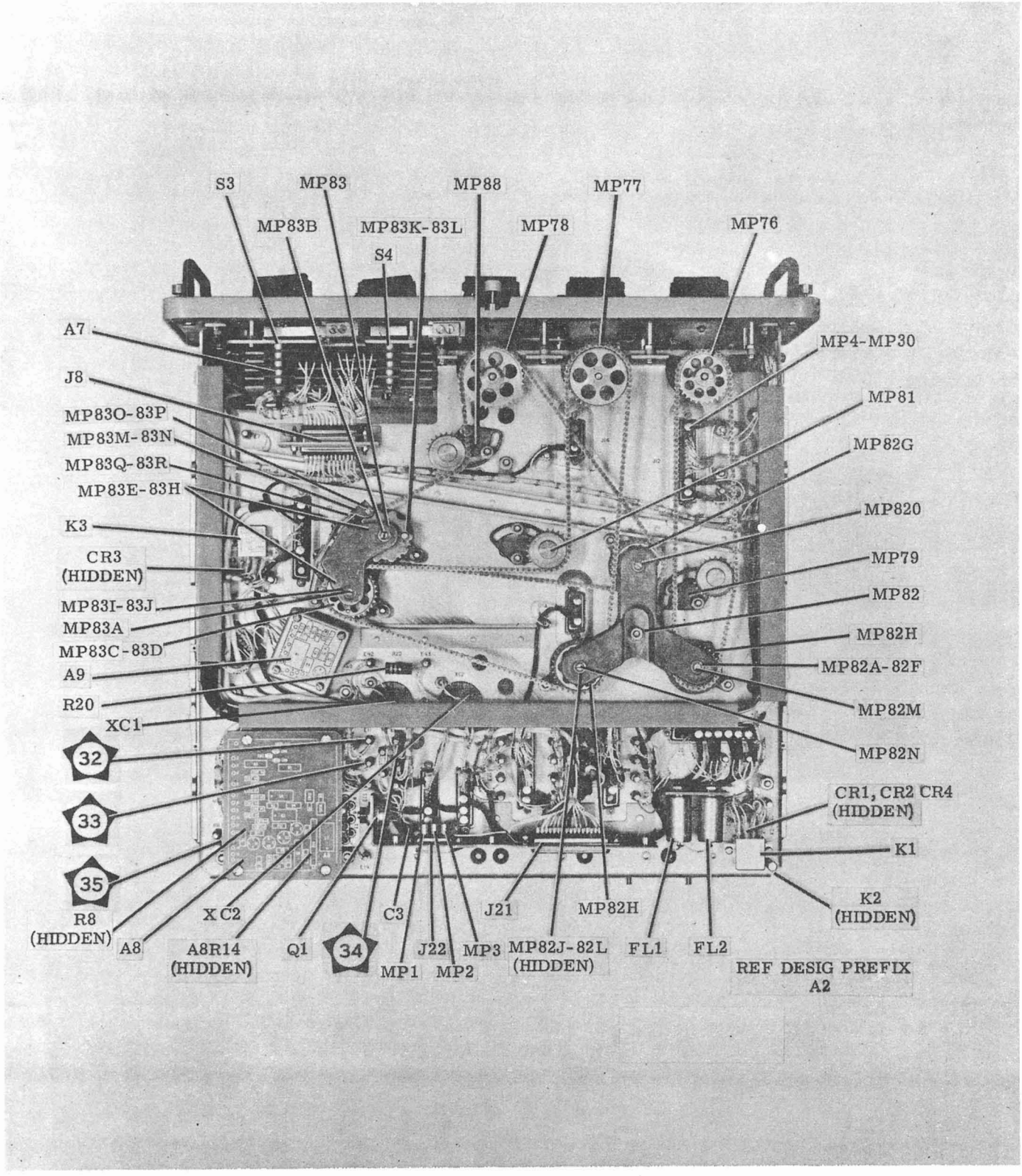

Figure 5-16. Radio Receiver R-1051/URR, Chassis, Bottom View, Component and Test Point Location

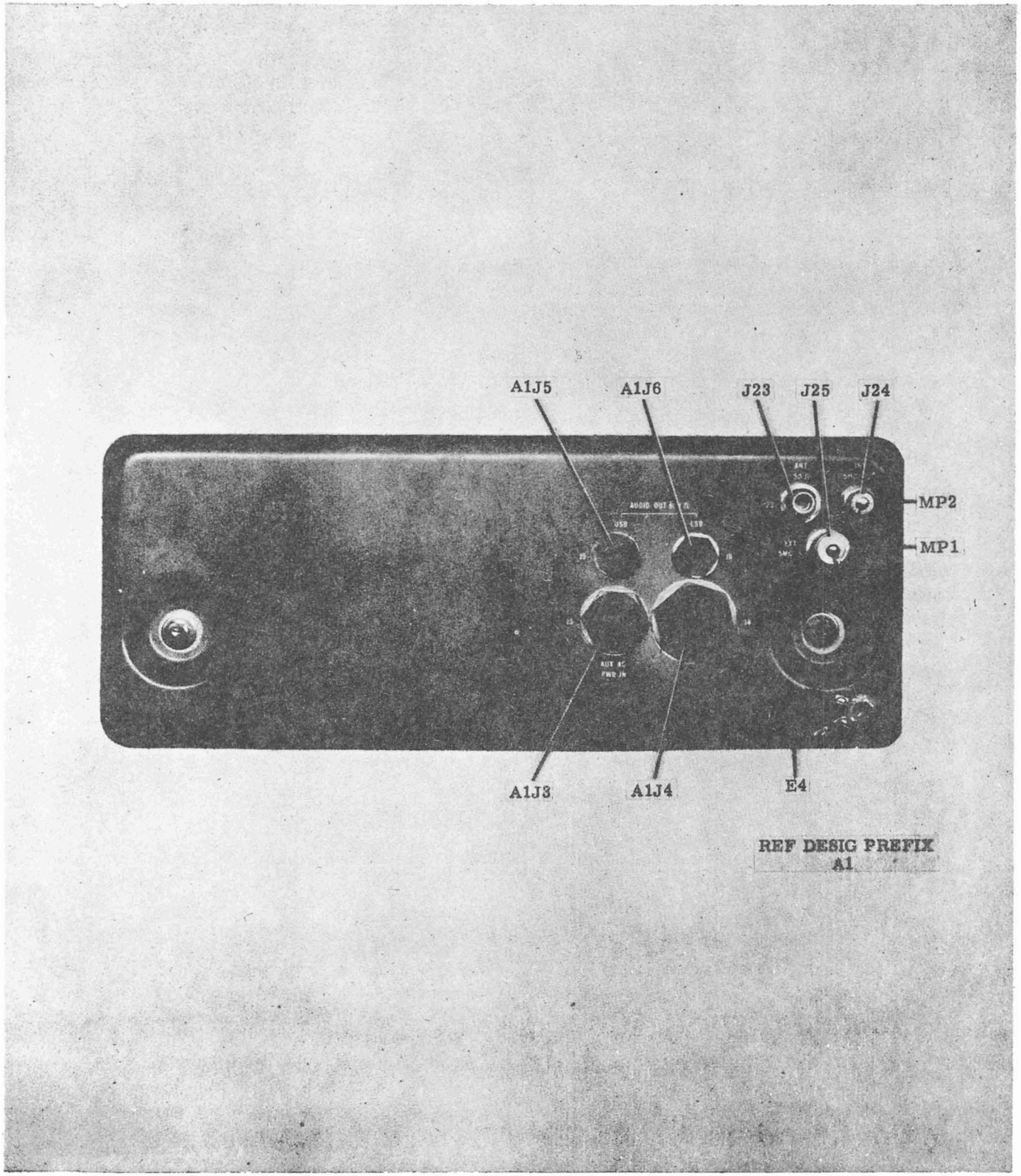

Figure 5-17. Radio Receiver R-1051/URR, Case, Rear View

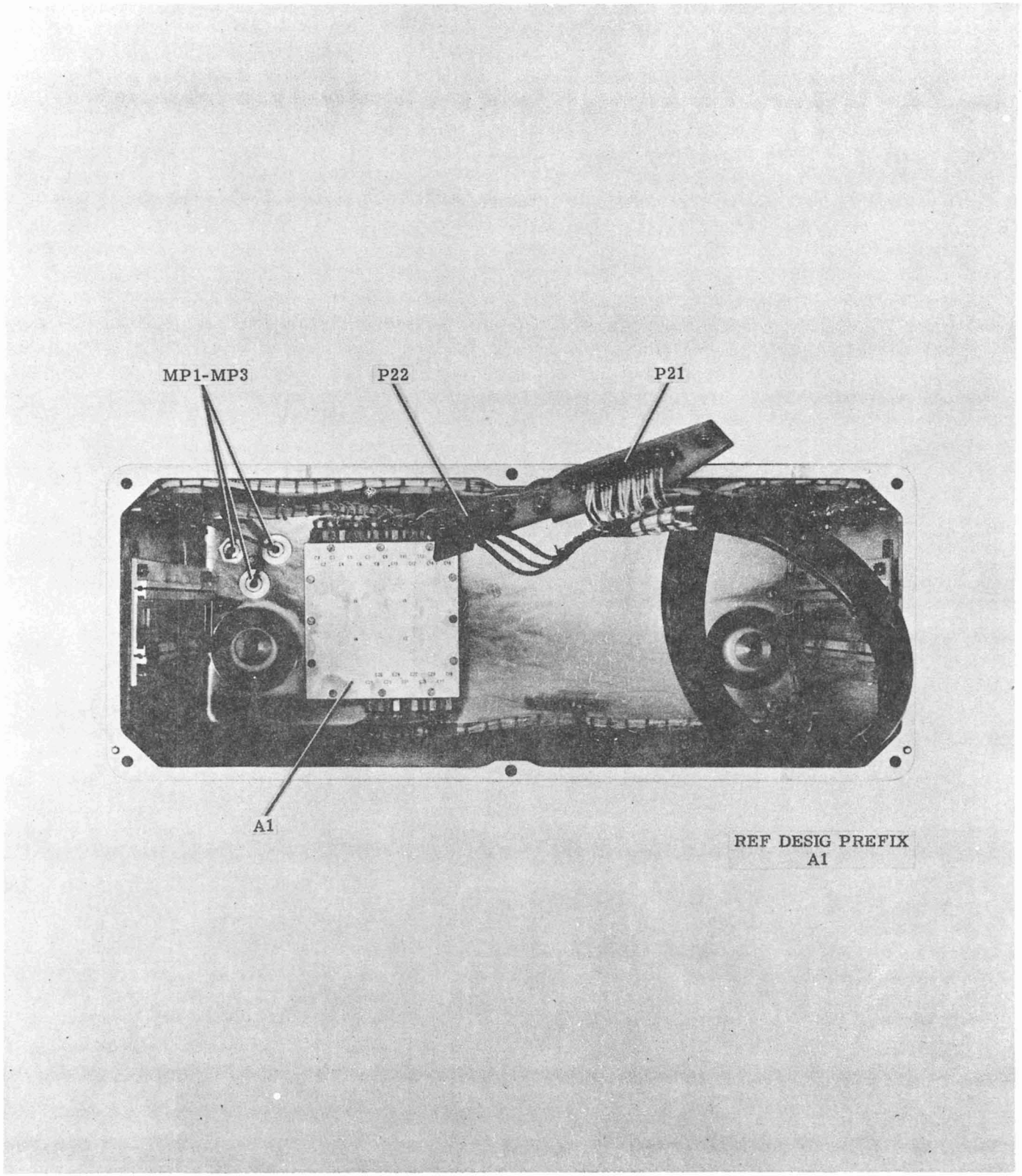

Figure 5-18. Radio Receiver R-1051/URR, Case, Inside View

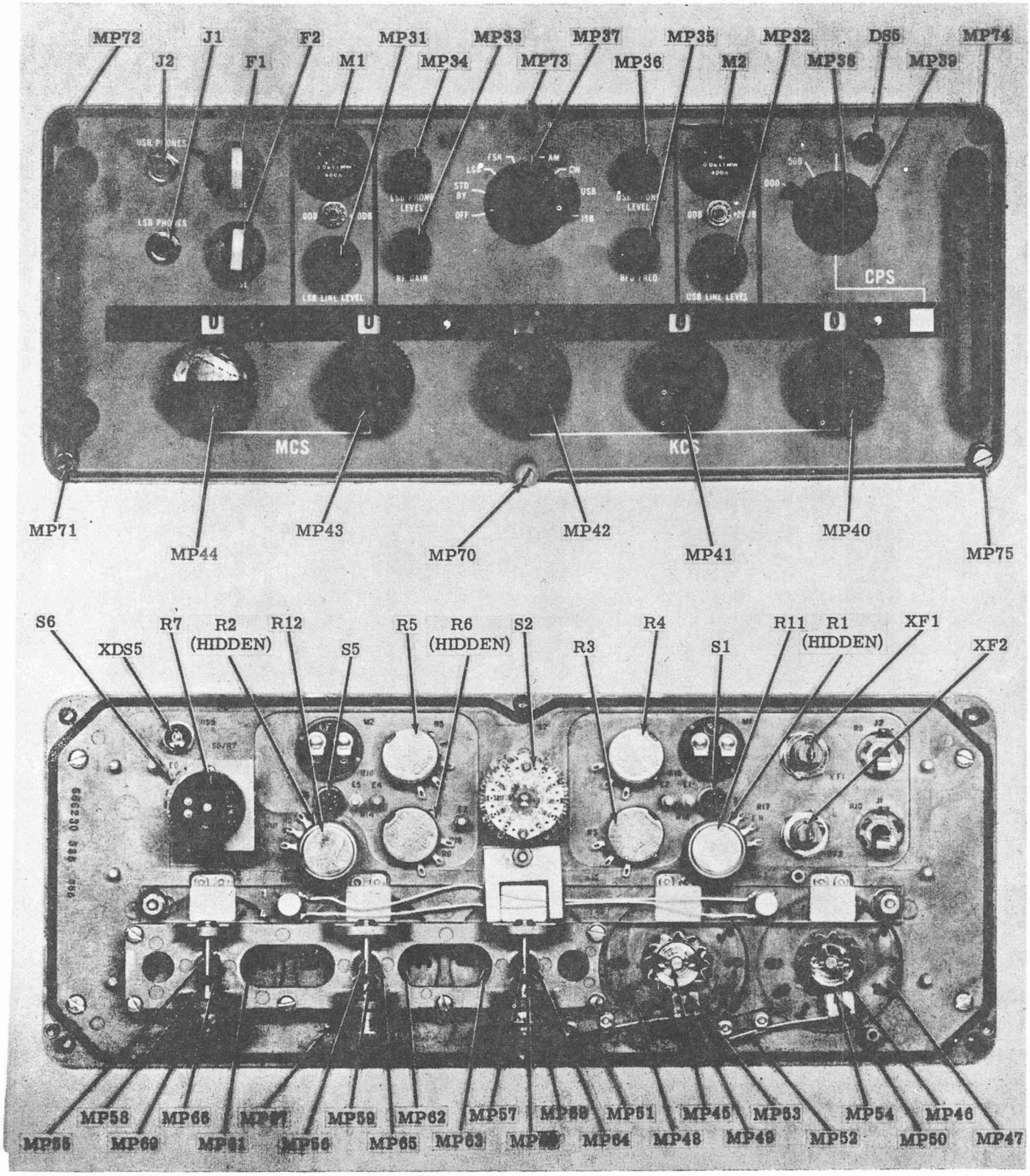

Figure 5-18a. Radio Receiver R-1051/URR, Front Panel Assembly, Component Location

PARTS LOCATION INDEX

REF DESIG	LOC	REF DESIG	LOC
C1	7B	E8	6G
C2	7B	E9	6G
C3	5D	E10	5G
C4	6D	E11	5G
C6	3C	E12	4G
C7	4B	E13	4G
CR1	7F	E14	4G
CR2	6F	E15	3G
CR3	6F	E16	2G
CR4	6F	E17	9G
CR5	9D	E18	5A
CR6	8D	Q1	3F
CR7	8E	Q2	3E
CR8	8D	Q3	3D
CR9	5F	Q4	4C
CR10	5F	R1	7D
CR11	5F	R2	7F
CR12	5F	R3	5E
CR13	6C	R4	5C
CR14	5B	R5	3F
CR15	2E	R6	2D
CR16	4E	R7	4F
CR17	4E	R8	2D
E1	9G	R9	3D
E2	8G	R10	2D
E3	8G	R11	2D
E4	8G	R12	4D
E5	7G	R13	3C
E7	6G	R14	3C
		R15	4C

NOTES:
1. REF. DESIG. PREFIX A2.
2. ⚠1 CR13, CR14, CR16, CR17 ALL ZENER DIODES.

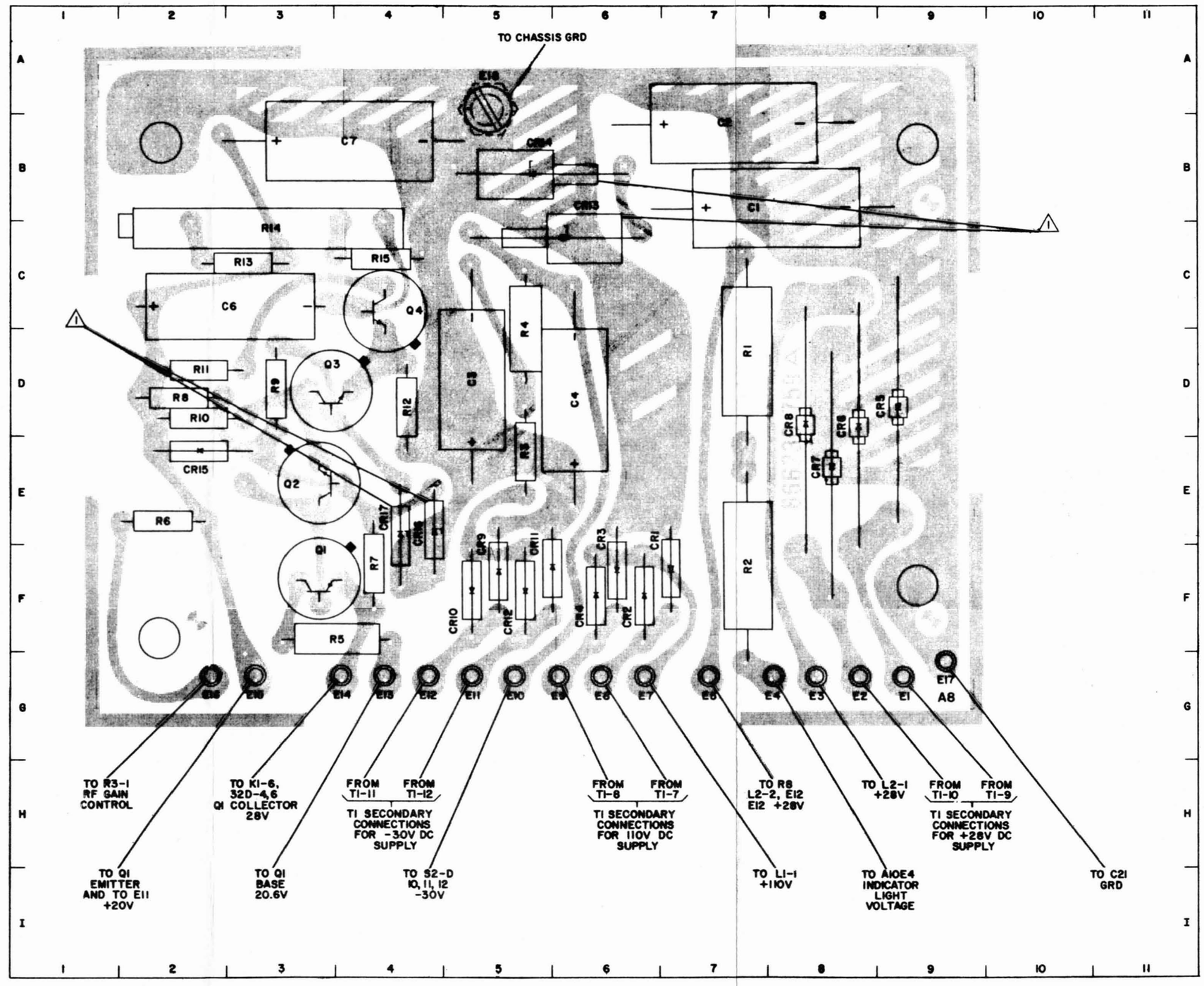

Figure 5-19. Receiver Power Supply (Foil Side Up), Component Location

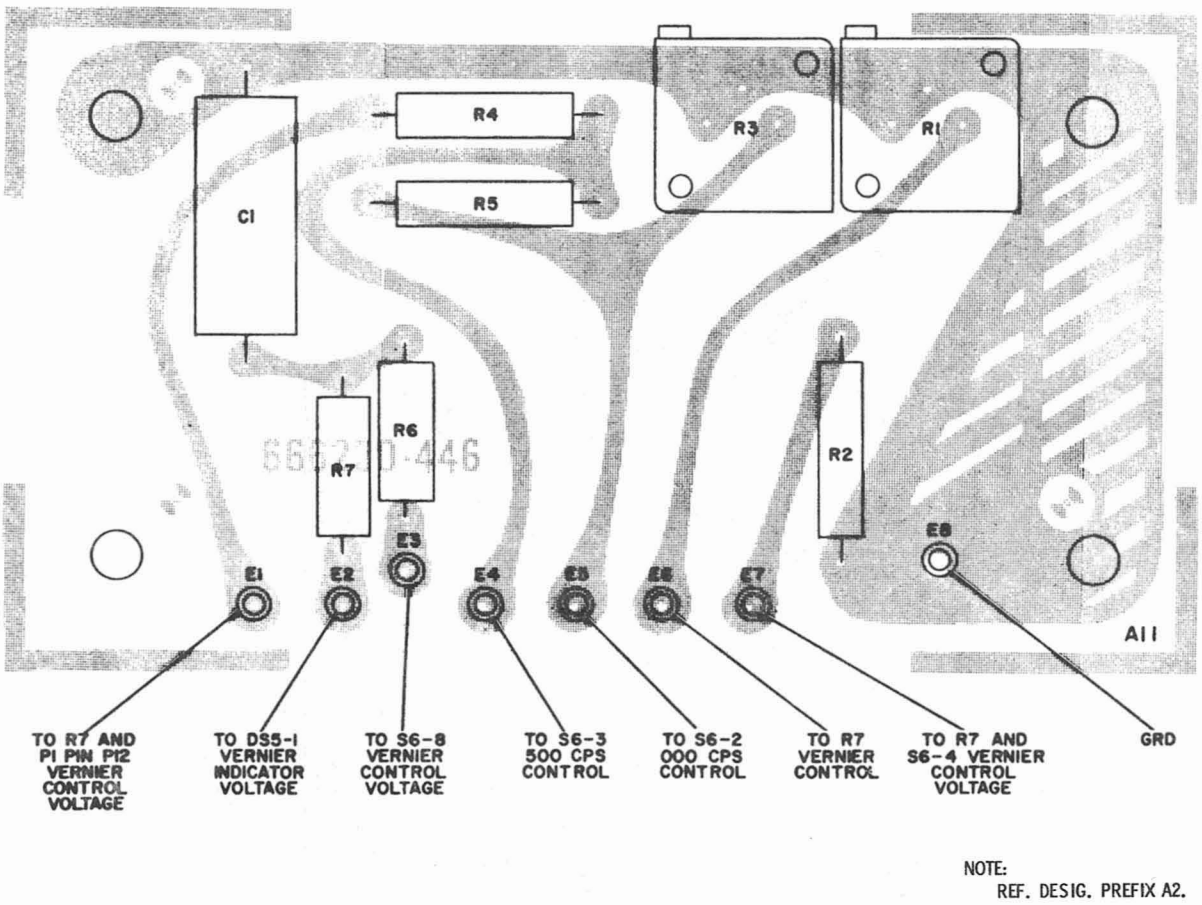

Figure 5-20. Receiver 500 CPS Control (Foil Side Up), Component Location

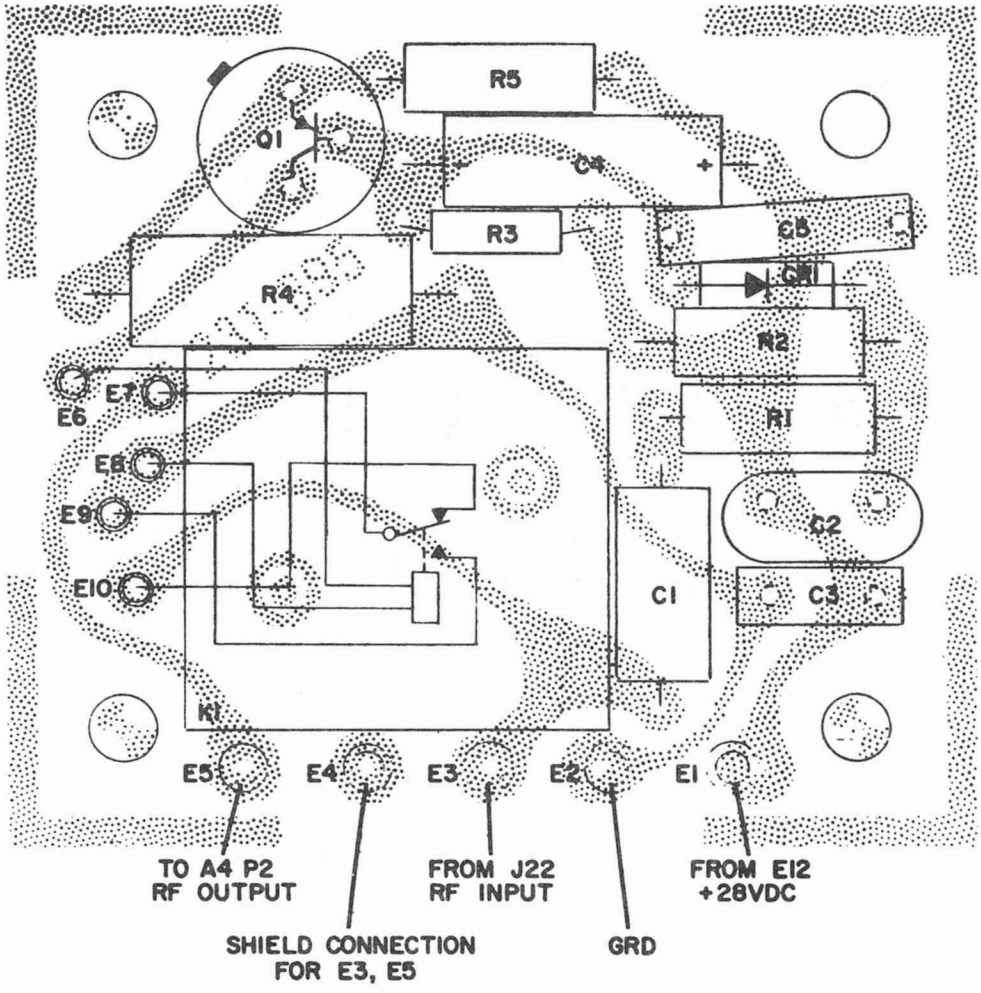

Figure 5-21. Antenna Overload (Foil Side Up), Component Location

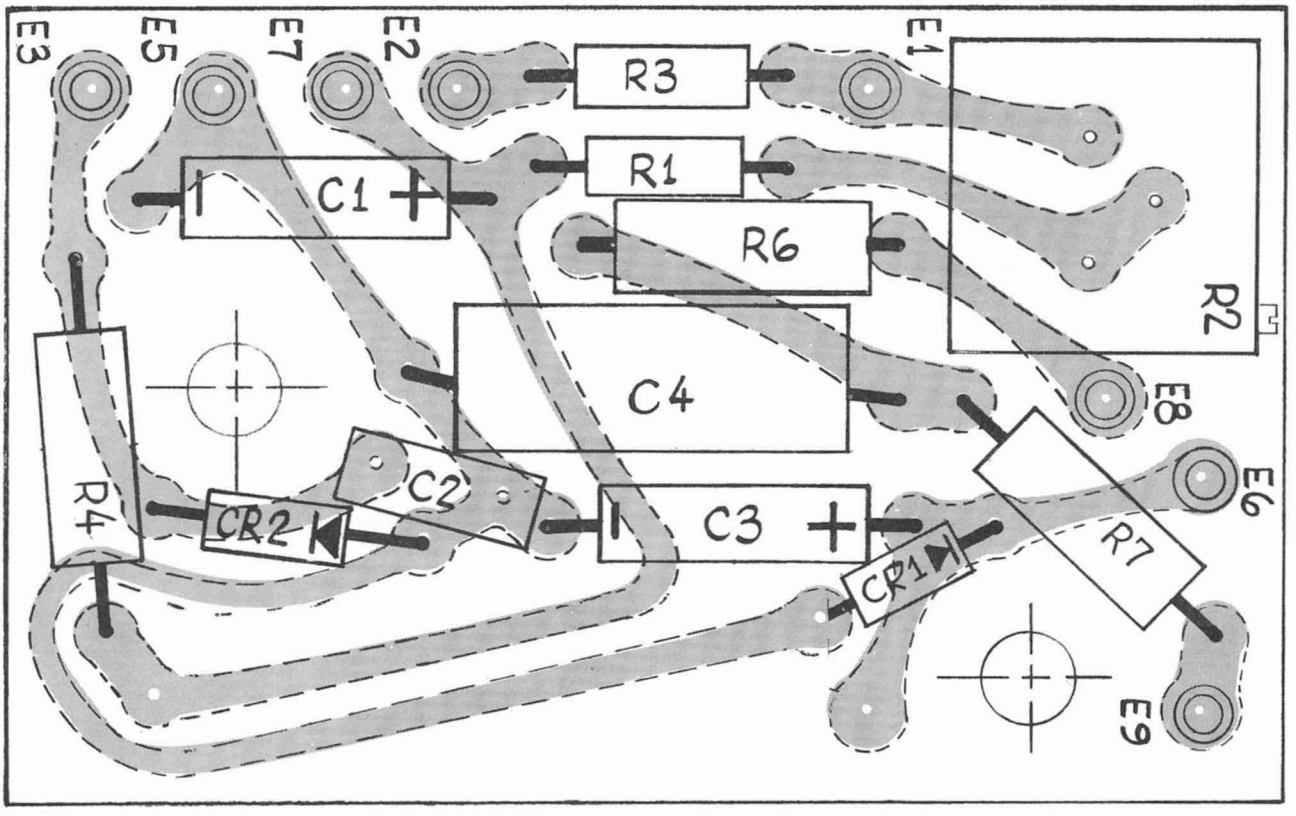

Figure 5-21A. 4 VDC Power Supply and Vernier Control (Foil Side Up), Component Location

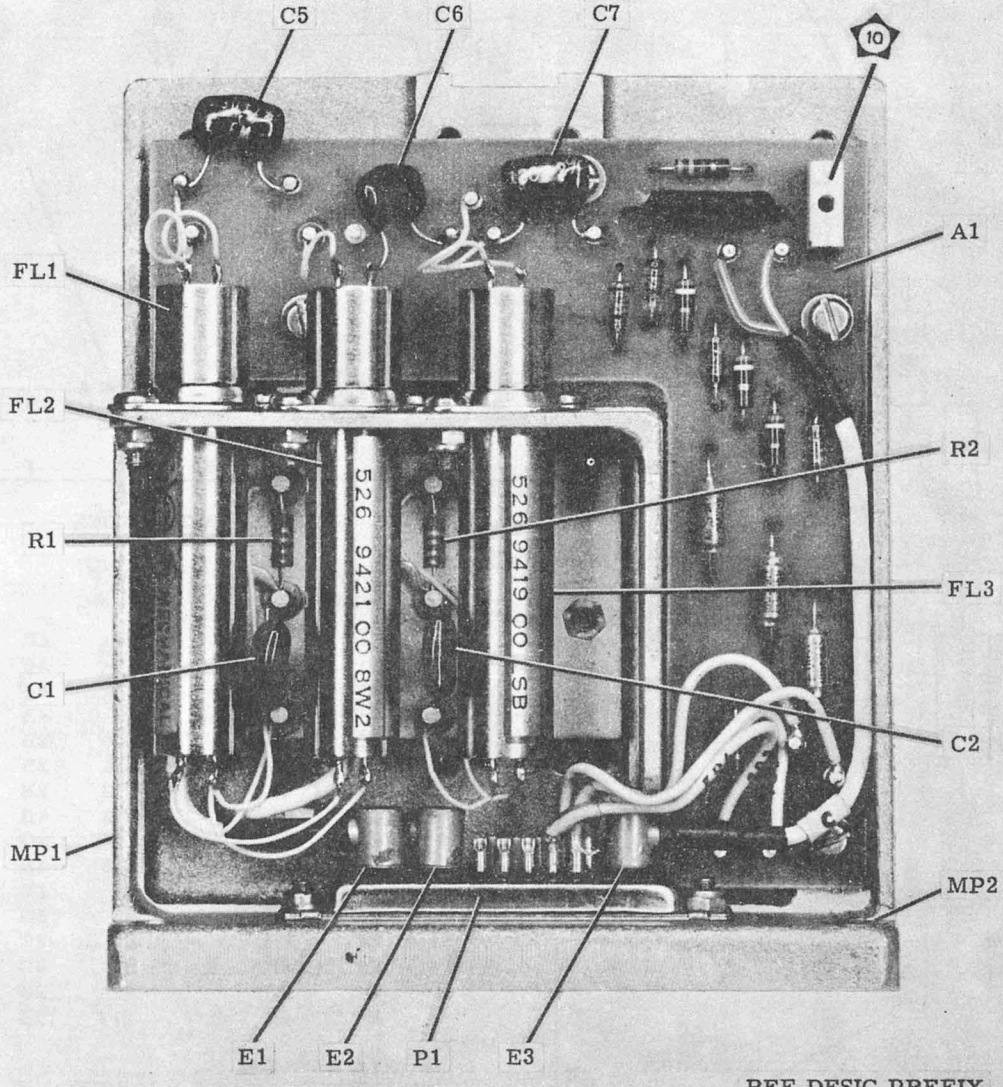

Figure 5-22. Receiver Mode Selector Electronic Assembly, Left Side View, Component Location

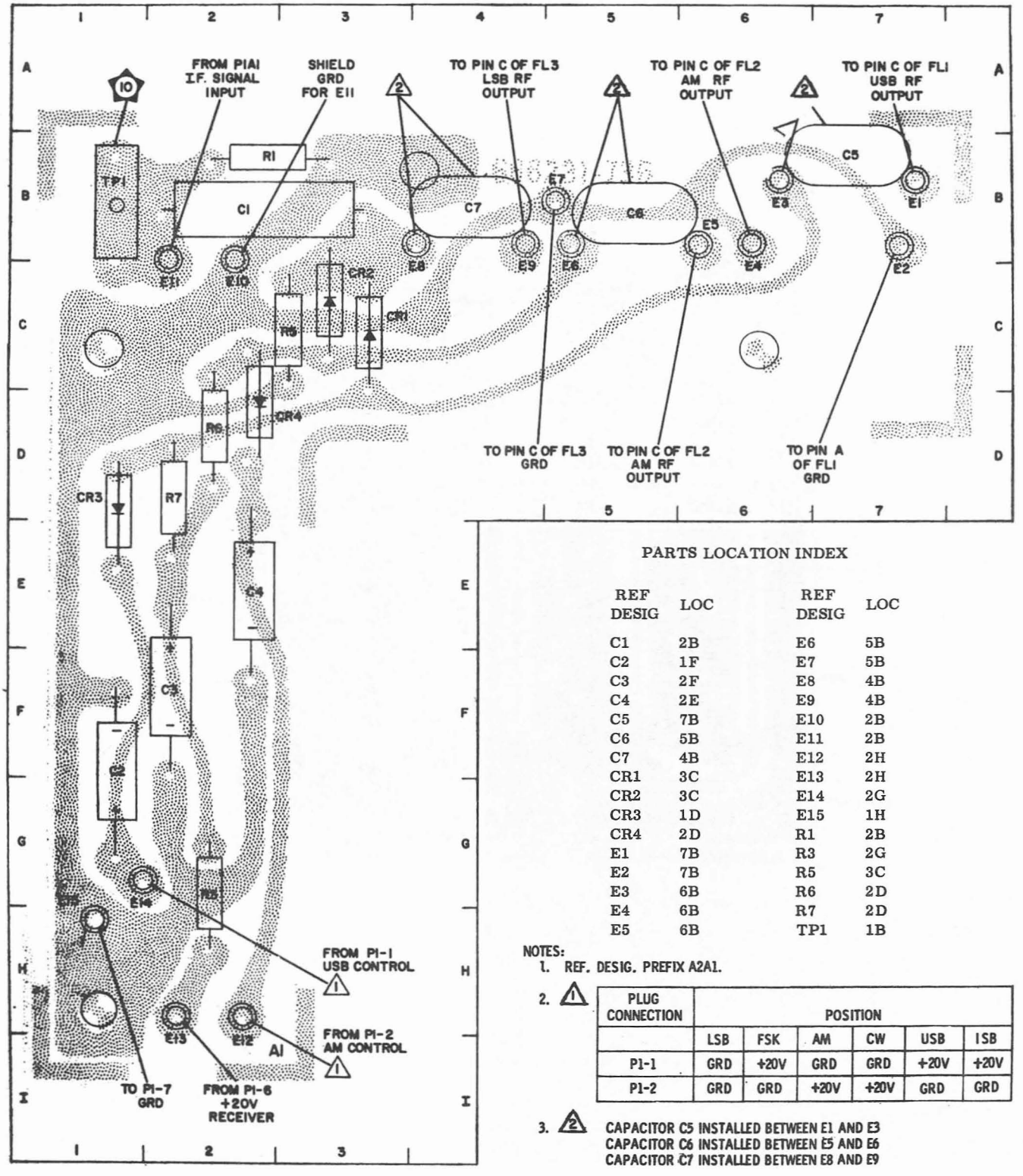

PARTS LOCATION INDEX

REF DESIG	LOC	REF DESIG	LOC
C1	2B	E6	5B
C2	1F	E7	5B
C3	2F	E8	4B
C4	2E	E9	4B
C5	7B	E10	2B
C6	5B	E11	2B
C7	4B	E12	2H
CR1	3C	E13	2H
CR2	3C	E14	2G
CR3	1D	E15	1H
CR4	2D	R1	2B
E1	7B	R3	2G
E2	7B	R5	3C
E3	6B	R6	2D
E4	6B	R7	2D
E5	6B	TP1	1B

NOTES:
1. REF. DESIG. PREFIX A2A1.
2. (1)

PLUG CONNECTION	POSITION					
	LSB	FSK	AM	CW	USB	ISB
P1-1	GRD	+20V	GRD	GRD	+20V	+20V
P1-2	GRD	GRD	+20V	+20V	GRD	GRD

3. (2) CAPACITOR C5 INSTALLED BETWEEN E1 AND E3
CAPACITOR C6 INSTALLED BETWEEN E5 AND E6
CAPACITOR C7 INSTALLED BETWEEN E8 AND E9

Figure 5-23. Mode Gates (Foil Side Up), Component and Test Point Location

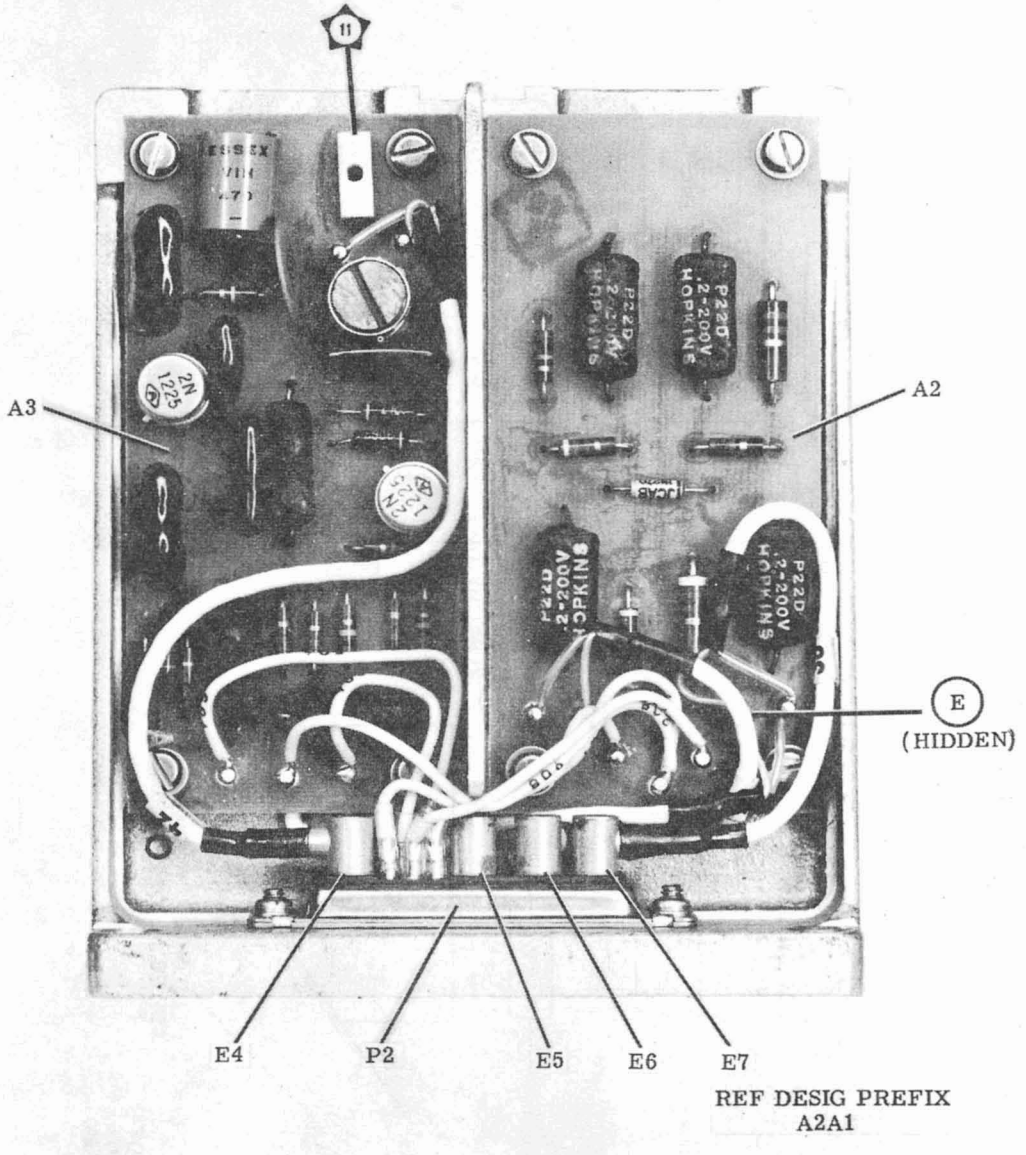

Figure 5-24. Receiver Mode Selector Electronic Assembly, Right Side, Component Location

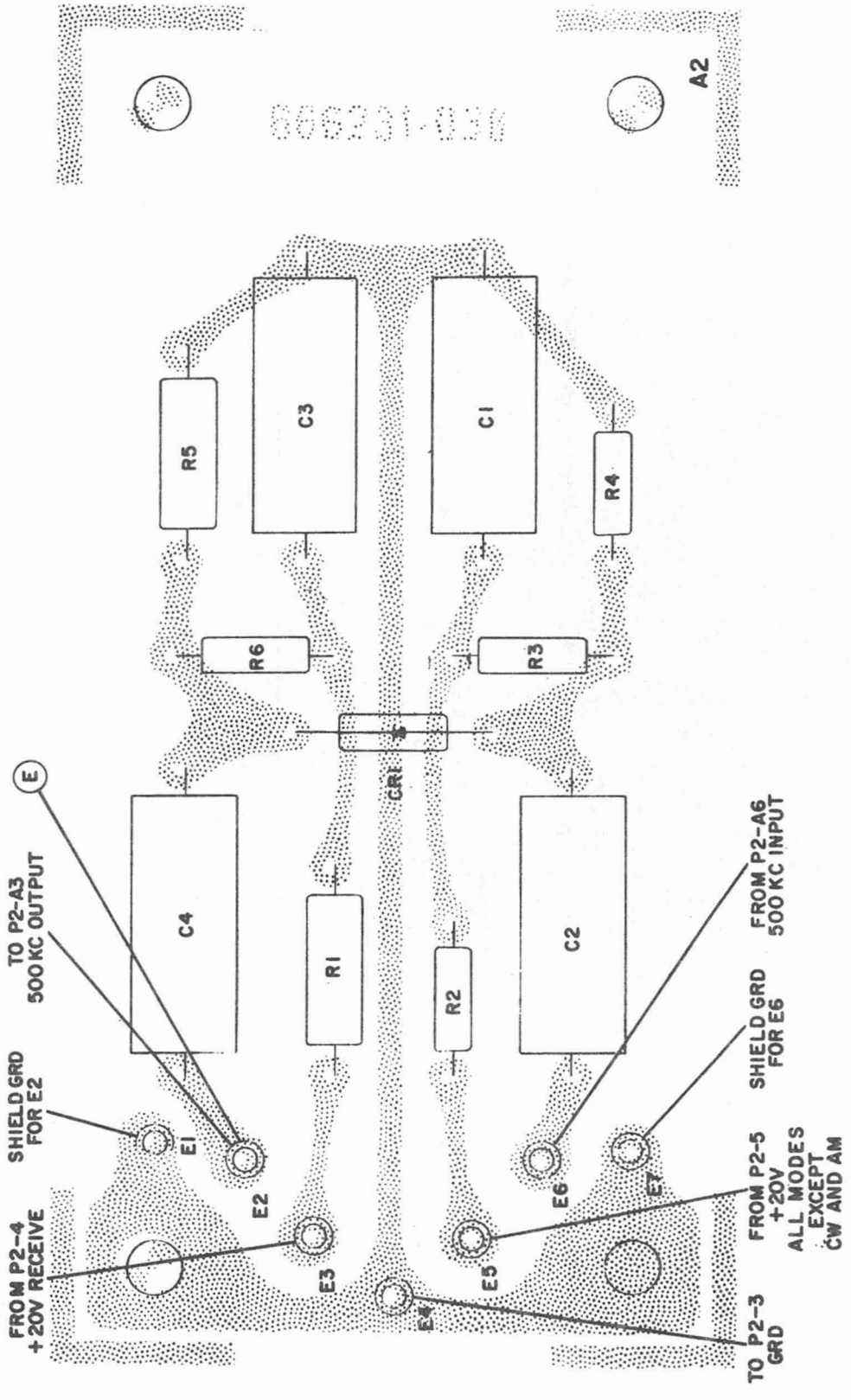

Figure 5-25. 500 KC Gate (Foil Side Up), Component and Test Point Location

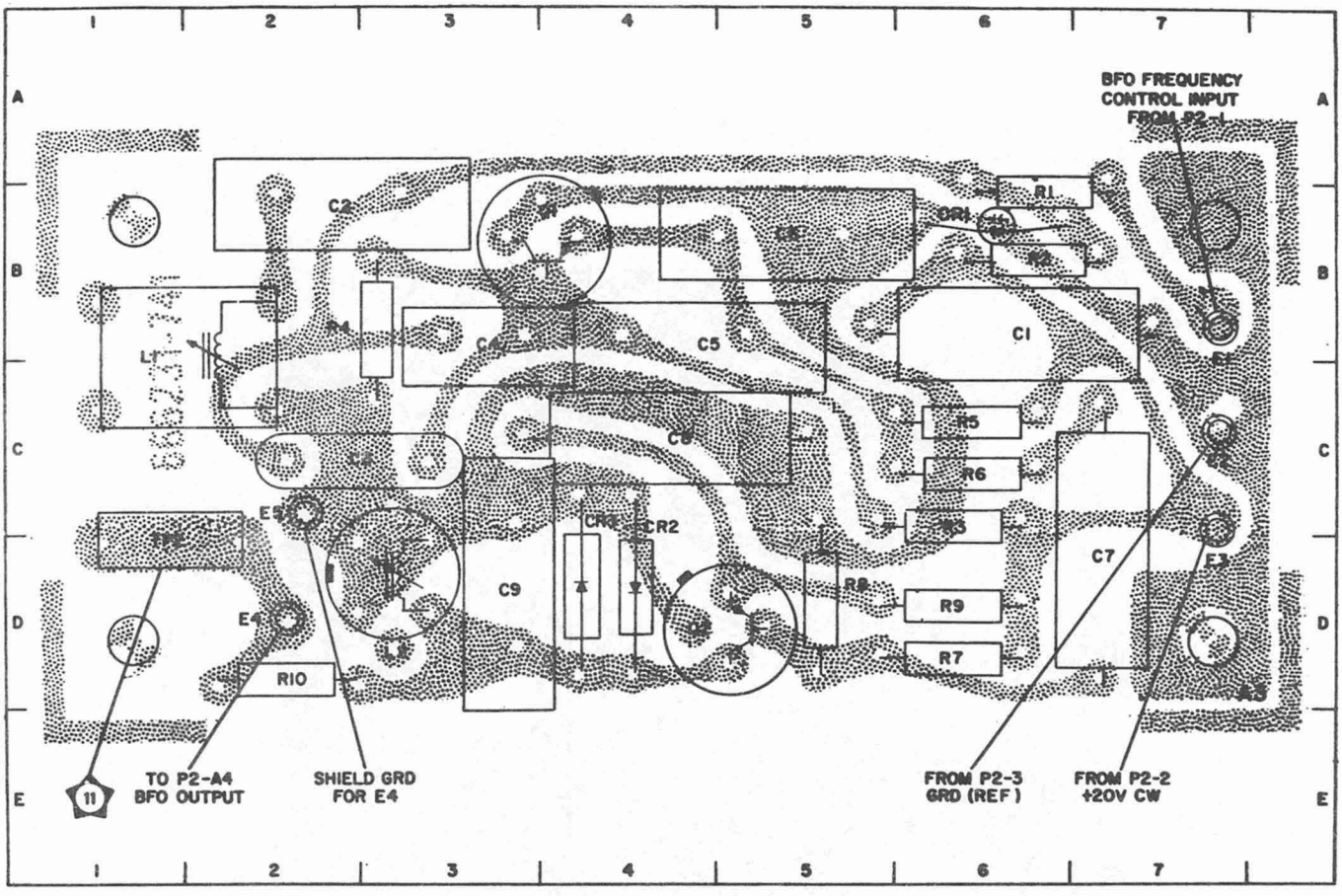

PARTS LOCATION INDEX

REF DESIG	LOC	REF DESIG	LOC	REF DESIG	LOC	REF DESIG	LOC
C1	6B	C9	3D	E5	2C	R4	2B
C2	2B	CR1	6B	L1	1B	R5	6C
C3	2C	CR2	4D	L2	3D	R6	6C
C4	3B	CR3	4D	Q1	4B	R7	6D
C5	4B	E1	7B	Q2	5D	R8	5D
C6	5B	E2	7C	R1	6B	R9	6D
C7	7B	E3	7D	R2	6B	R10	2D
C8	4C	E4	2D	R3	6C	TP2	1C

NOTE:
REF. DESIG. PREFIX A2A1

Figure 5-26. BFO and Amplifier (Foil Side Up), Component and Test Point Location

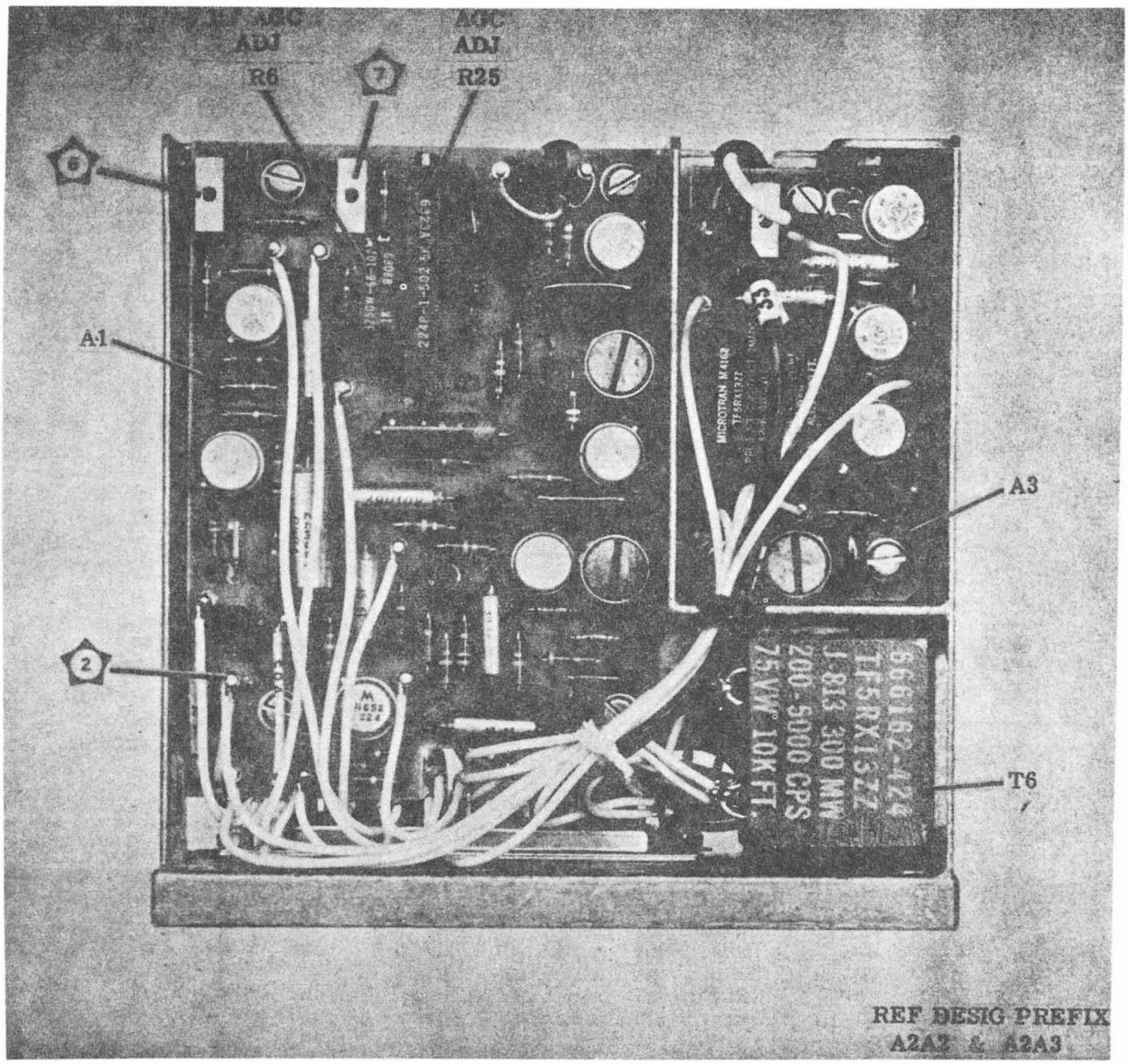

Figure 5-27. Receiver IF./Audio Amplifier Electronic Assembly, Right Side, Component Location

NOTE:
REF. DESIG. PREFIX A2A2* OR A2A3*.
*(TWO IDENTICAL ASSEMBLIES IN RECEIVER).

PARTS LOCATION INDEX

REF DESIG	LOC	REF DESIG	LOC	REF DESIG	LOC
C1	5C	E8	3F	R12	7E
C2	7D	E9	8C	R13	8E
C3	6D	E10	7D	R14	8E
C4	3F	E11	3E	R15	8F
C5	8E	E12	7B	R16	8F
C6	7C	Q1	4C	R17	7E
C7	6E	Q2	6B	R18	6E
C8	6F	Q3	8B	R19	8F
C9	5F	Q4	6E	R20	6F
C10	4F	Q5	7E	R21	5F
C11	4E	Q6	7F	R22	5E
C12	9B	Q7	6G	R23	3F
C13	9E	Q8	3G	R24	5F
CR1	3C	Q9	9D	R25	4E
CR2	7B	R1	4C	R26	3F
CR3	7B	R2	3D	R27	8C
CR4	8F	R3	5C	R28	8E
CR5	8F	R4	5C	R29	9D
E1	3C	R5	4D	R30	9D
E2	4C	R6	4D	RT1	9F
E3	8D	R7	6C	T1	7G
E4	5D	R8	7C	T2	5G
E5	9B	R9	8D	TP1	3B
E6	8B	R10	4B	TP2	3D
E7	9C	R11	5C		

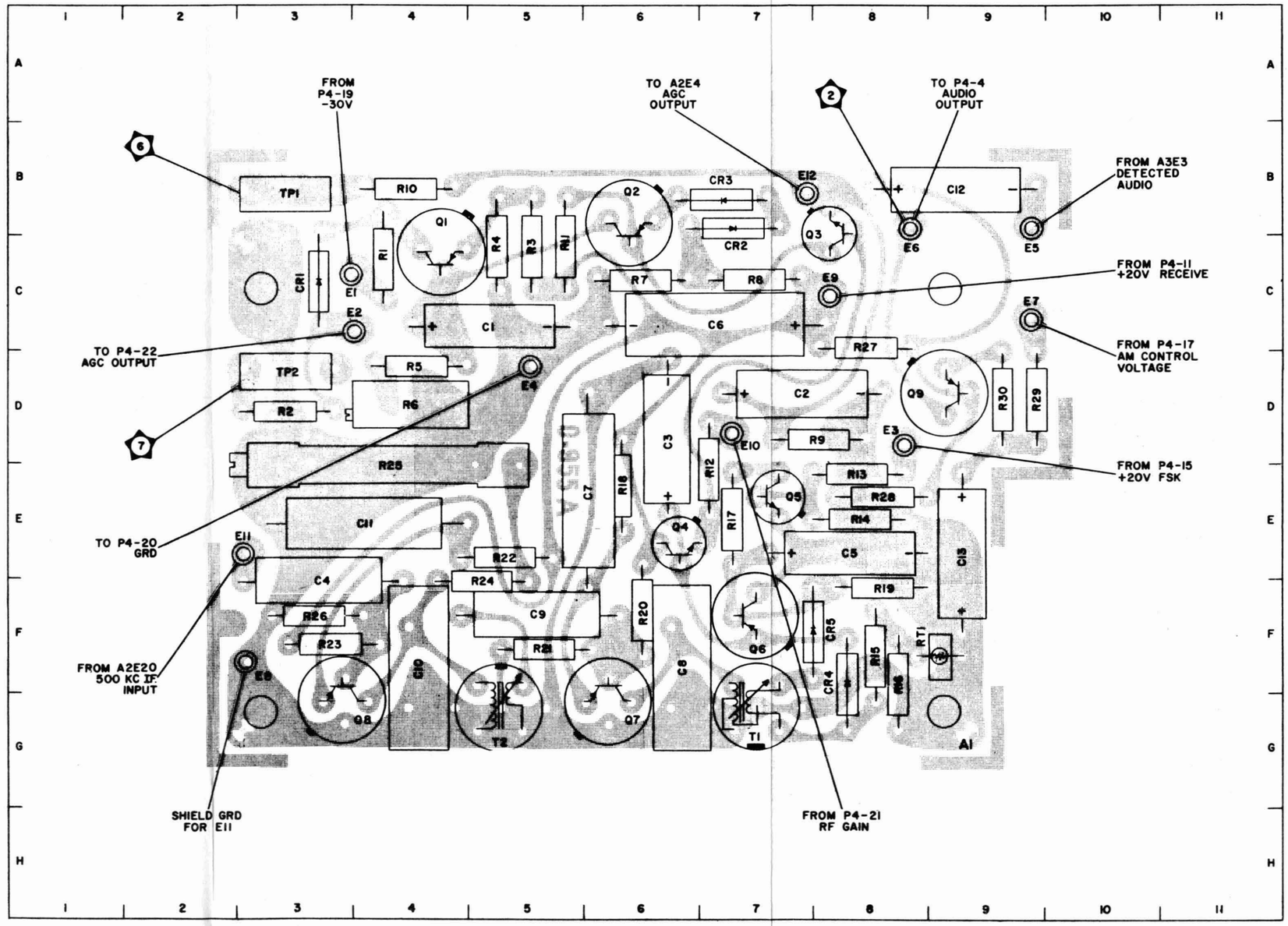

Figure 5-28. Step AGC and Audio Amplifier (Foil Side Up), Component and Test Point Location

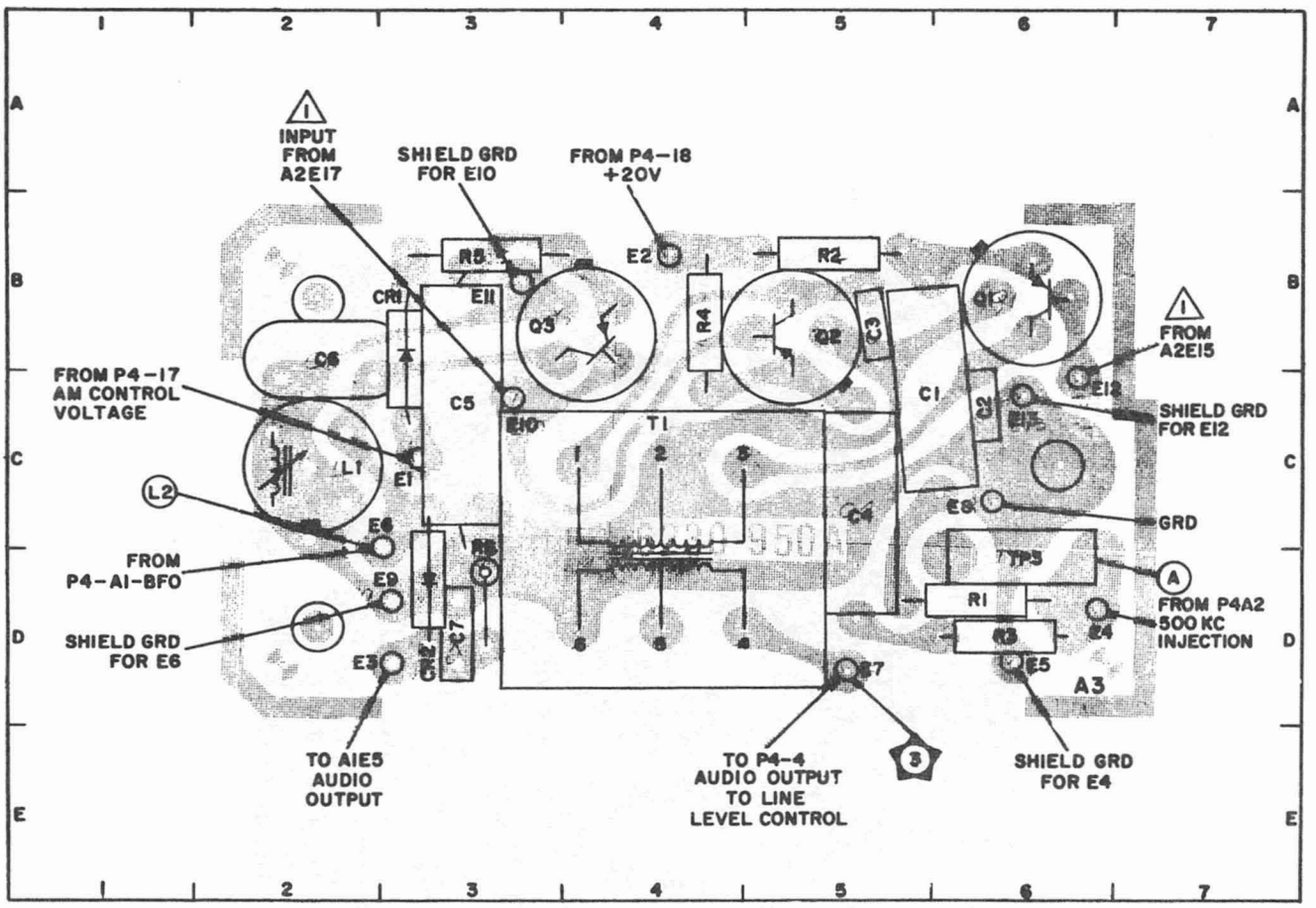

NOTES:
1. REF. DESIG. PREFIX A2A2* OR A2A3*
   *(TWO IDENTICAL ASSEMBLIES IN RECEIVER).
2. ⚠1 INPUTS TO E12 AND E10 - BALANCED INPUT FROM I.F. AMPLIFIERS.

PART LOCATION INDEX

REF DESIG	LOC	REF DESIG	LOC	REF DESIG	LOC	REF DESIG	LOC	REF DESIG	LOC
C1	C6	CR1	B3	E6	C3	E13	C6	R3	D6
C2	C6	CR2	D3	E7	D5	L1	C2	R4	B4
C3	B5	E1	C3	E8	C6	Q1	B6	R5	B3
C4	C5	E2	B4	E9	D3	Q2	B5	R6	D3
C5	C3	E3	D3	E10	C3	Q3	B4	T1	C4
C6	B2	E4	D6	E11	B3	R1	D6	TP3	D6
C7	D3	E5	D6	E12	C6	R2	B5		

Figure 5-29. Product/AM Detectors (Foil Side Up), Component and Test Point Location

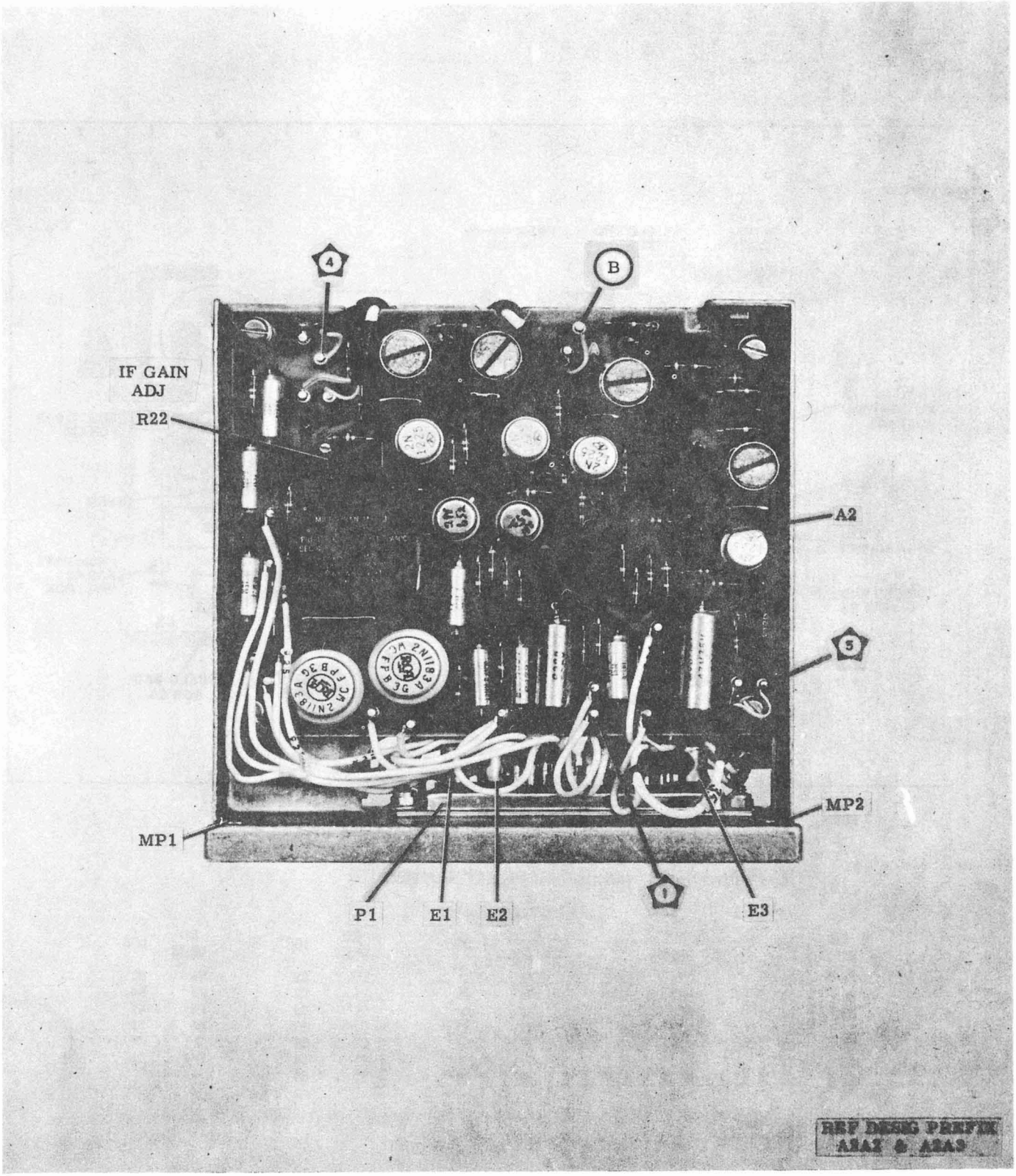

Figure 5-30. Receiver IF/Audio Amplifier Electronic Assembly, Left Side, Component Location

NOTE:
REF. DESIG. PREFIX A2A3.

PARTS LOCATION INDEX

REF DESIG	LOC	REF DESIG	LOC
C1	4B	Q4	7D
C2	6B	Q5	7E
C3	6B	Q6	7G
C4	8B	Q7	6E
C5	7C	Q8	6F
C6	9C	Q9	4G
C7	7C	Q10	3H
C8	7D	R1	5B
C9	6D	R2	4B
C10	8E	R3	5B
C11	8F	R5	7B
C12	7F	R6	5C
C13	8F	R7	8B
C14	8G	R8	5C
C15	7G	R9	8C
C16	8I	R10	6C
C17	4D	R11	7C
C18	4E	R12	5C
C19	4E	R13	9D
C20	3F	R14	7E
C21	7I	R15	8E
C22	5F	R16	6E
C23	4H	R17	7E
C24	5I	R18	9F
C25	4B	R19	7F
C26	5F	R20	7F
CR1	8B	R21	7H
E1	3B	R22	7H
E2	3B	R23	8H
E3	3C	R24	8H
E4	4C	R25	8I
E5	6I	R26	4D
E6	3G	R27	4D
E7	4I	R28	4C
E8	3D	R29	5F
E9	3E	R30	5E
E10	3D	R31	5E
E11	3G	R32	4E
E12	3I	R33	5F
E13	4I	R34	3F
E14	5I	R35	5I
E15	8H	R36	6I
E16	8H	R37	5I
E17	8H	R38	5D
E18	9H	R39	6D
E19	9E	T1	7B
E20	9D	T2	8D
L1	3C	T3	8F
Q1	6B	T4	9G
Q2	8C	T5	5H
Q3	5D		

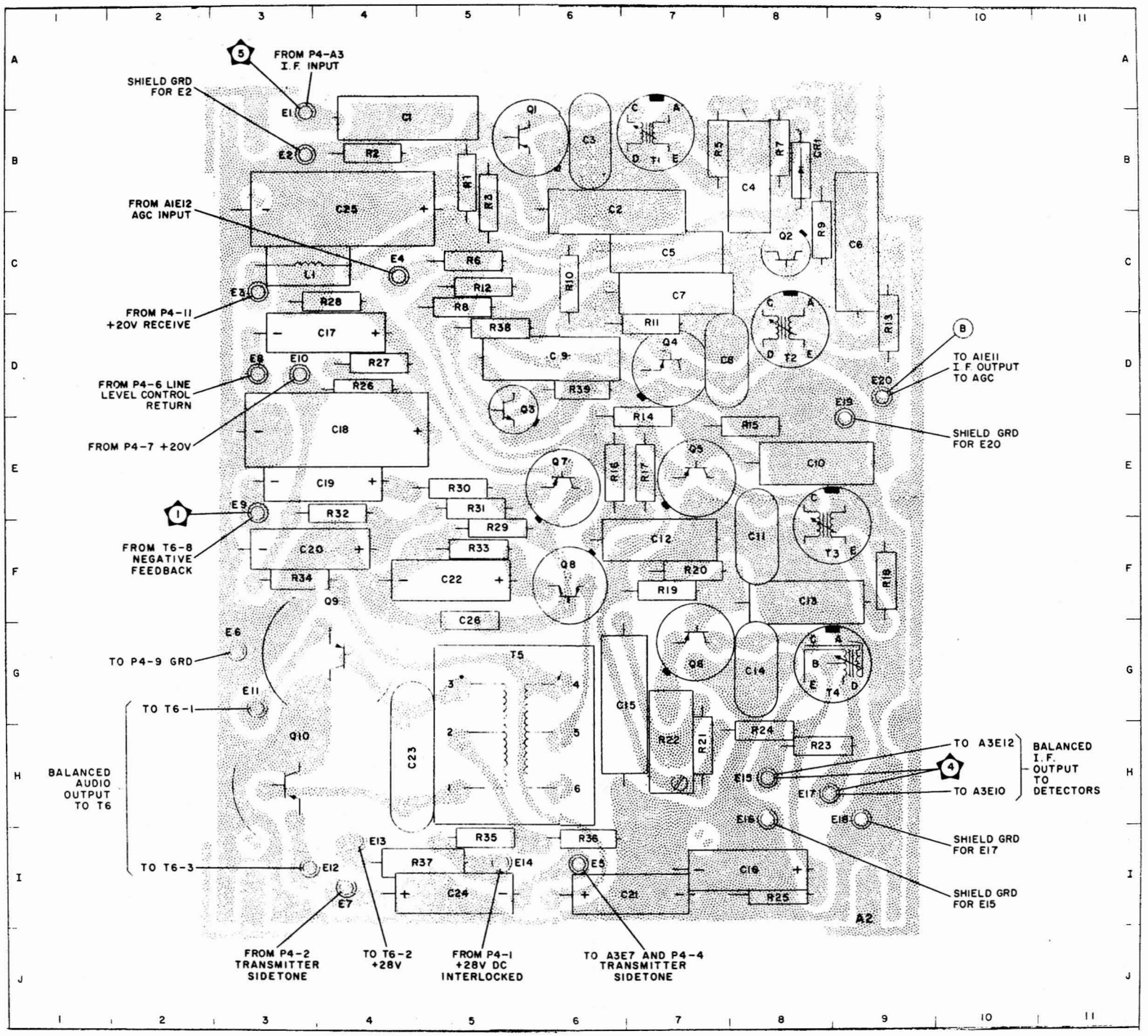

Figure 5-31. Gain-Controlled IF. Amplifier (Foil Side Up), Component and Test Point Location

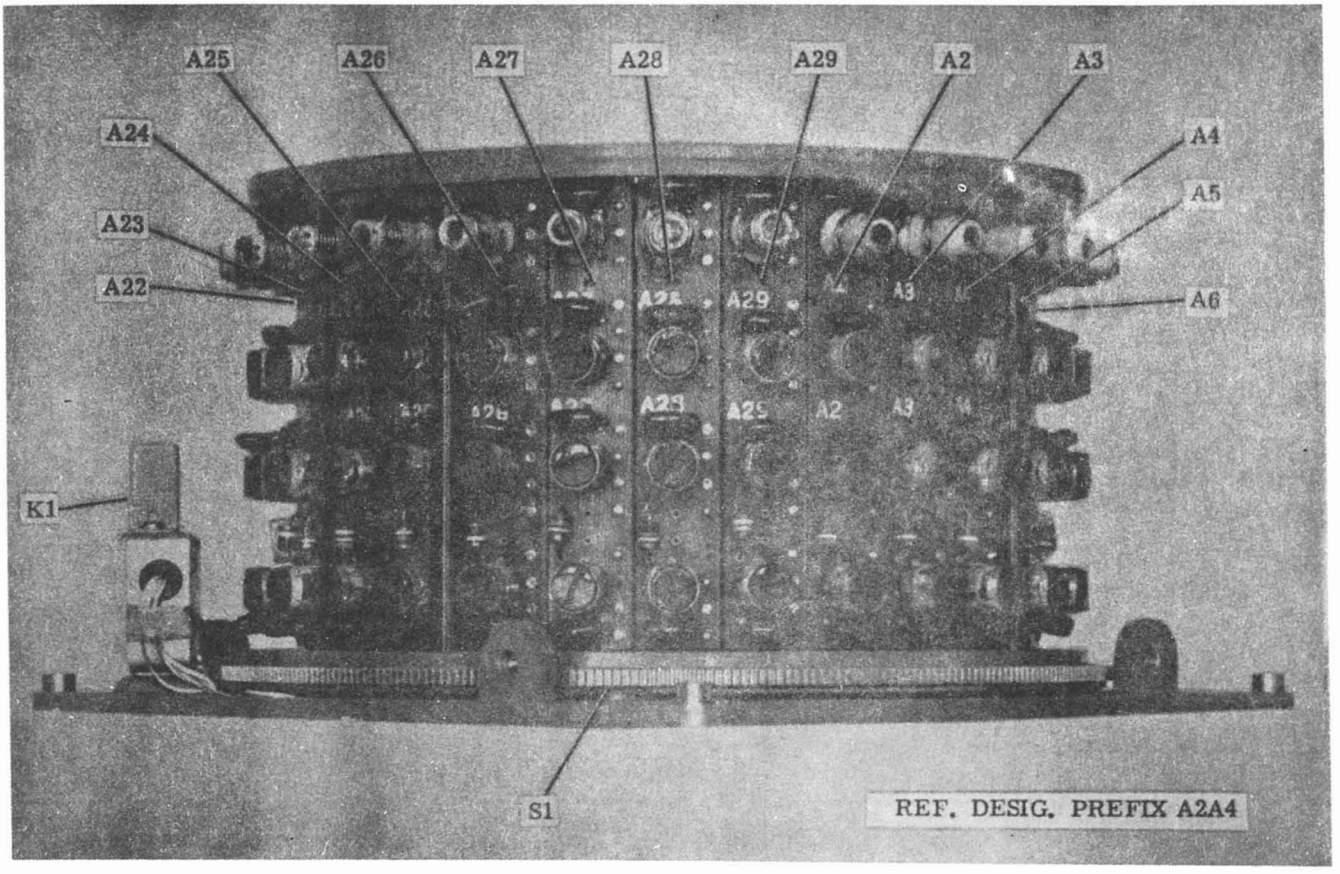

Figure 5-32. RF Amplifier Electronic Assembly, Front and Left Side, Component Location

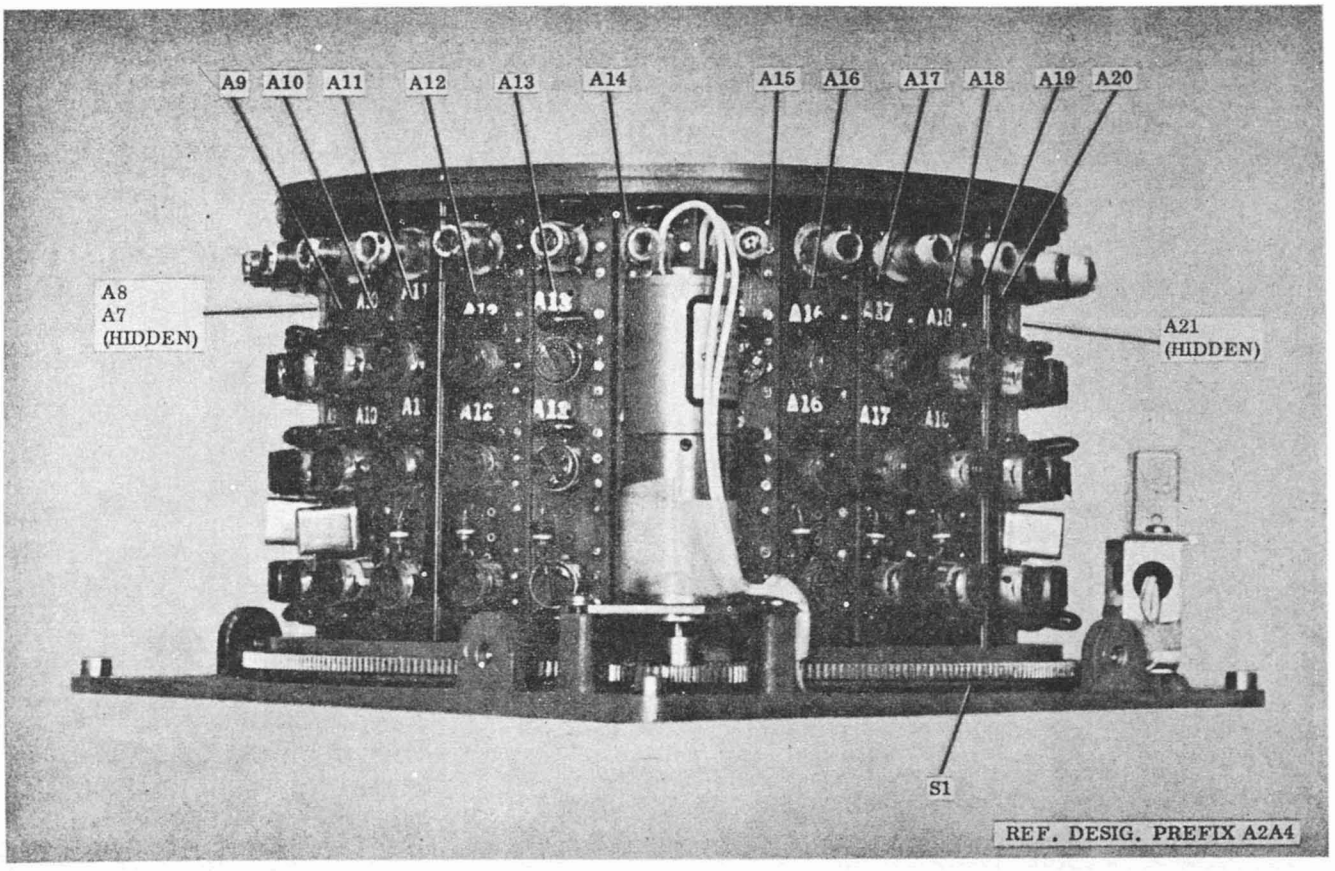

Figure 5-33. RF Amplifier Electronic Assembly, Rear and Right Side, Component Location

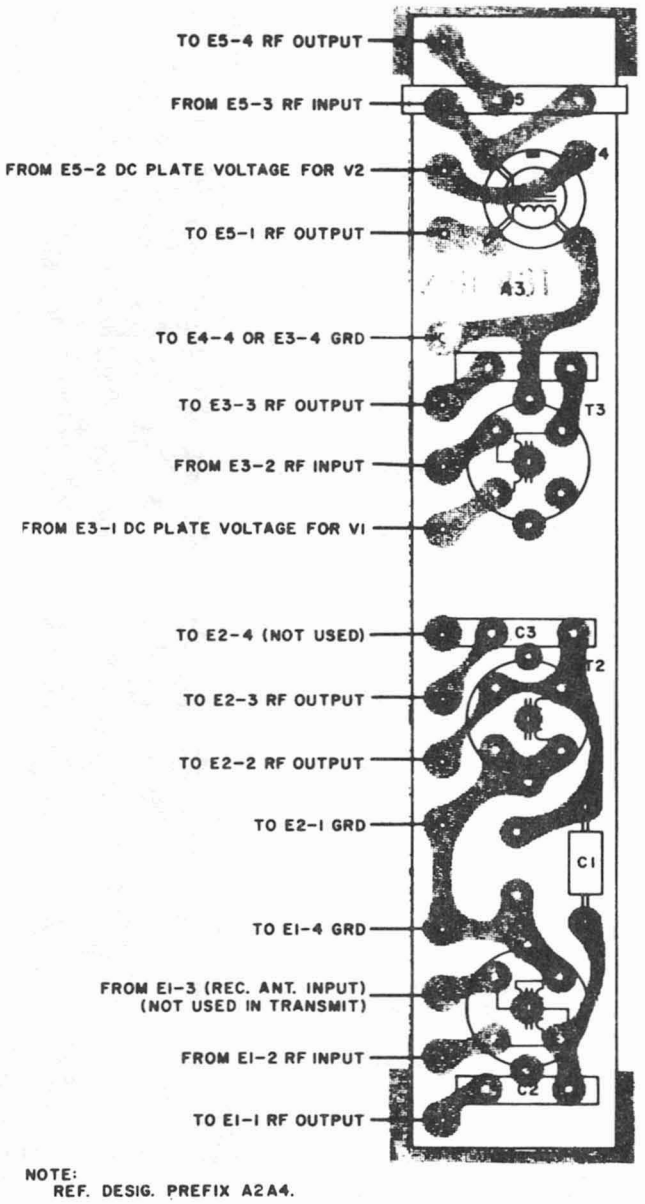

Figure 5-34. Megacycle Assembly A3 (Foil Side Up), Component Location

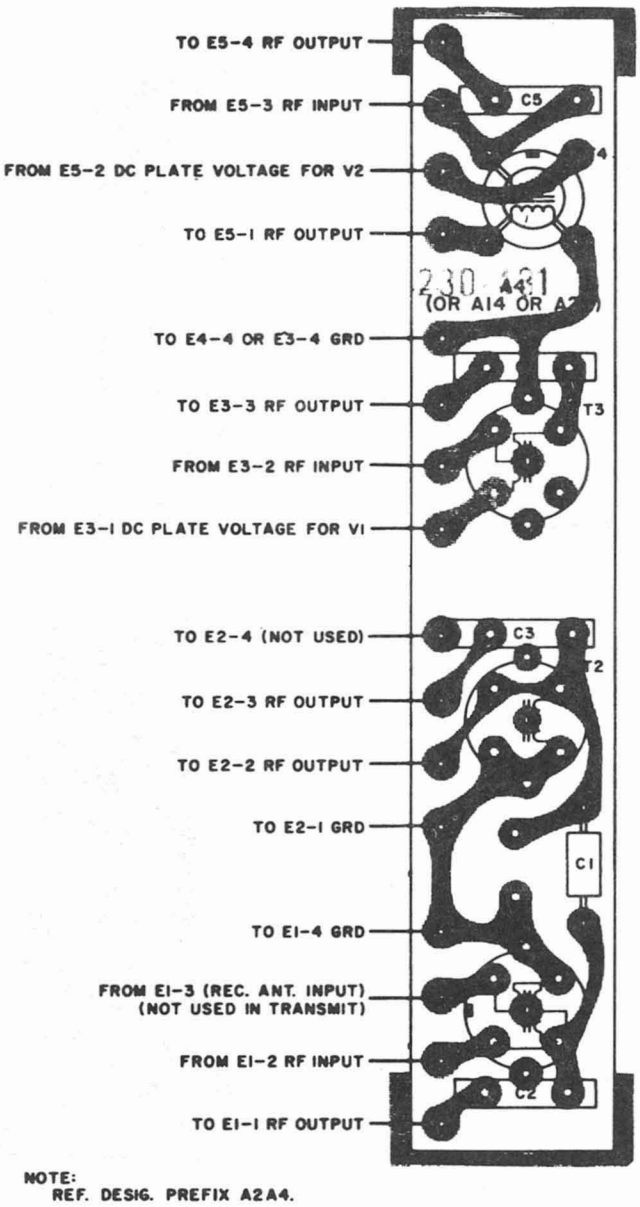

Figure 5-35. Megacycle Assembly A4, A14, or A22 (Foil Side Up), Component Location

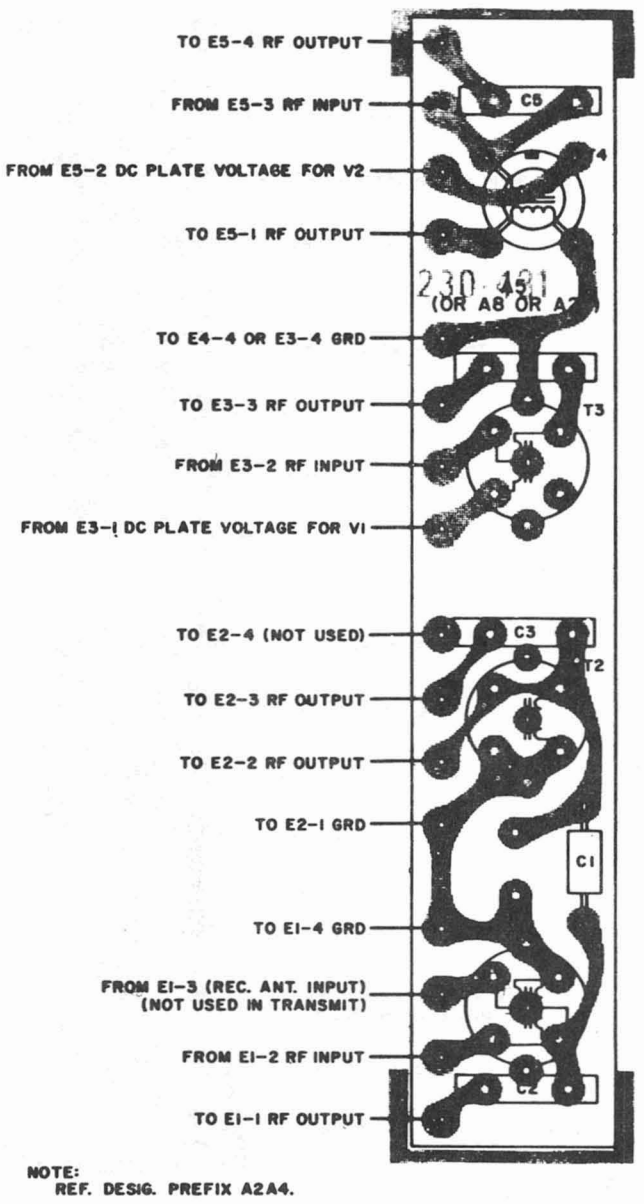

Figure 5-36. Megacycle Assembly A5, A8, or A29 (Foil Side Up), Component Location

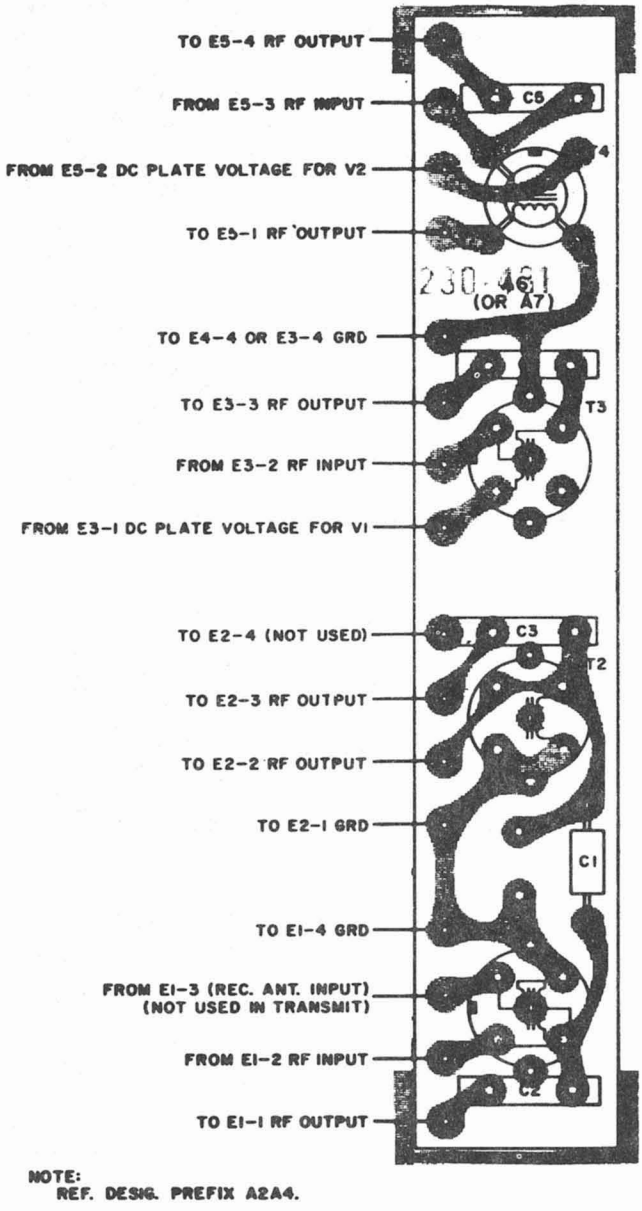

Figure 5-37. Megacycle Assembly A6 or A7 (Foil Side Up), Component Location

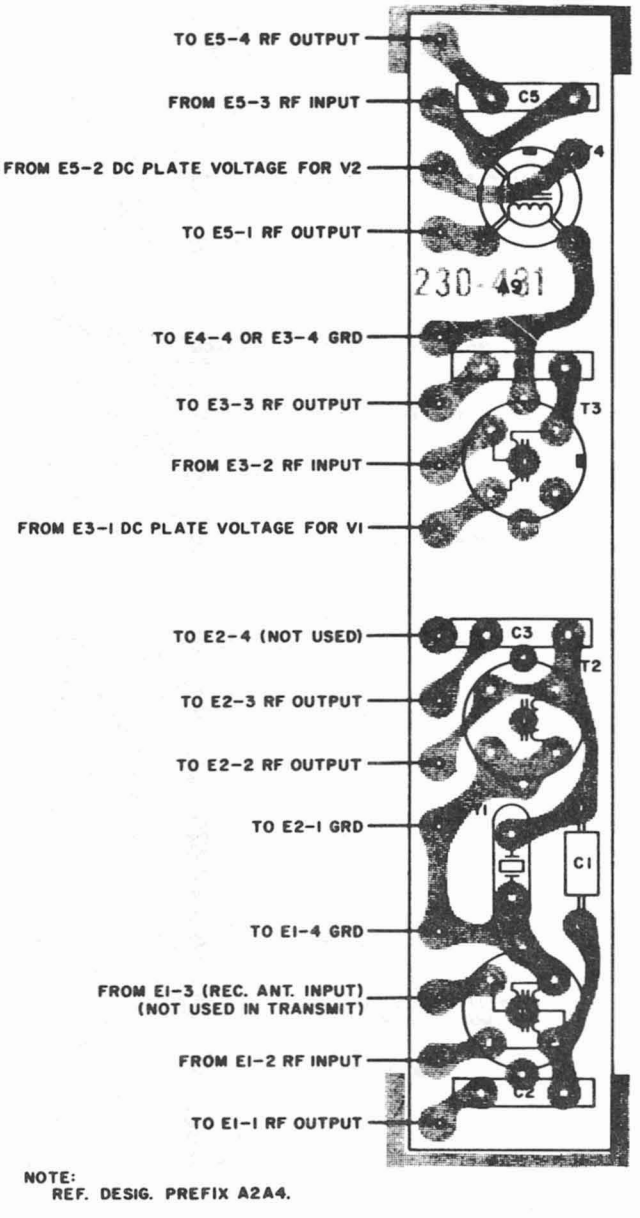

Figure 5-38. Megacycle Assembly A9 (Foil Side Up), Component Location

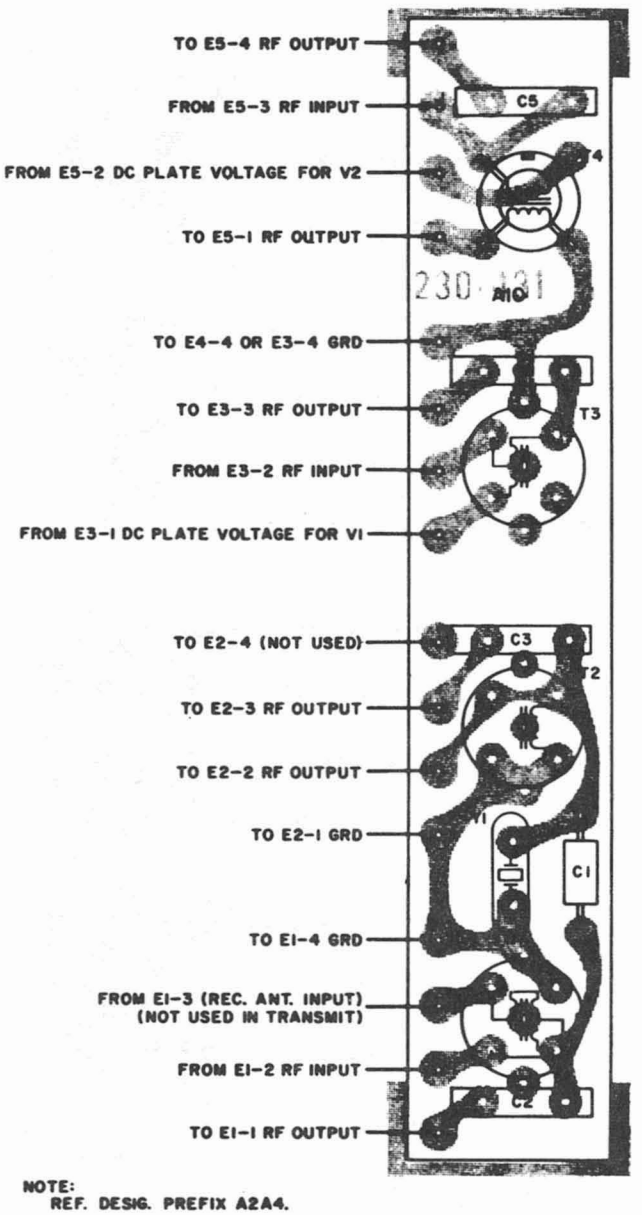

Figure 5-39. Megacycle Assembly A10 (Foil Side Up), Component Location

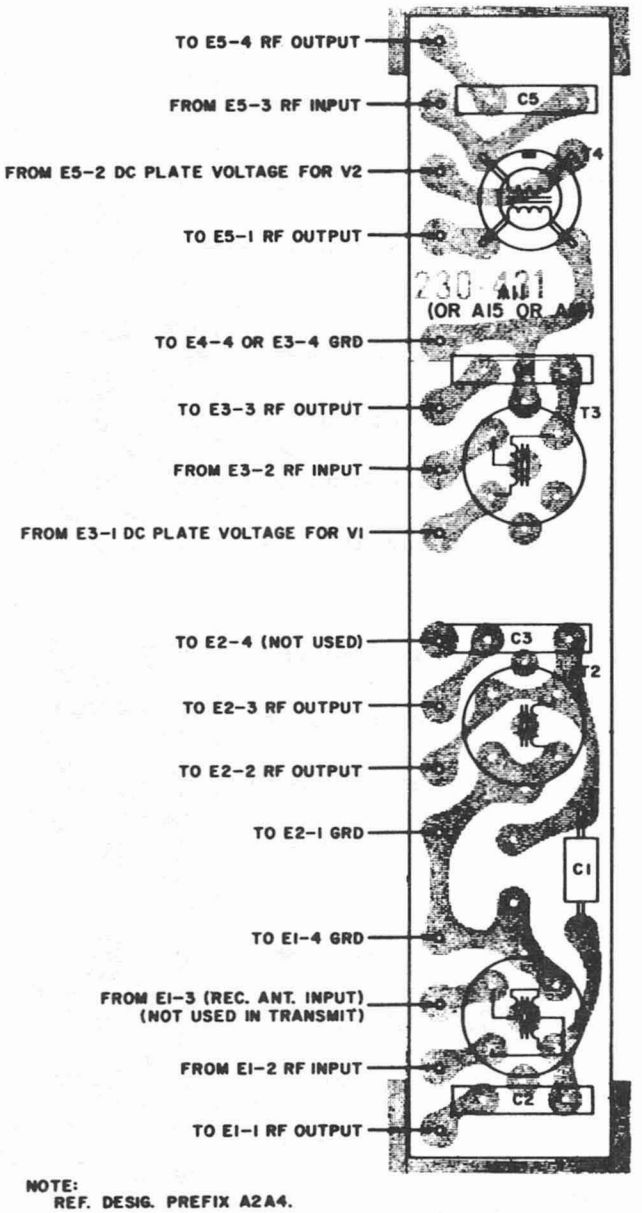

Figure 5-40. Megacycle Assembly A11, A15, or A16 (Foil Side Up), Component Location

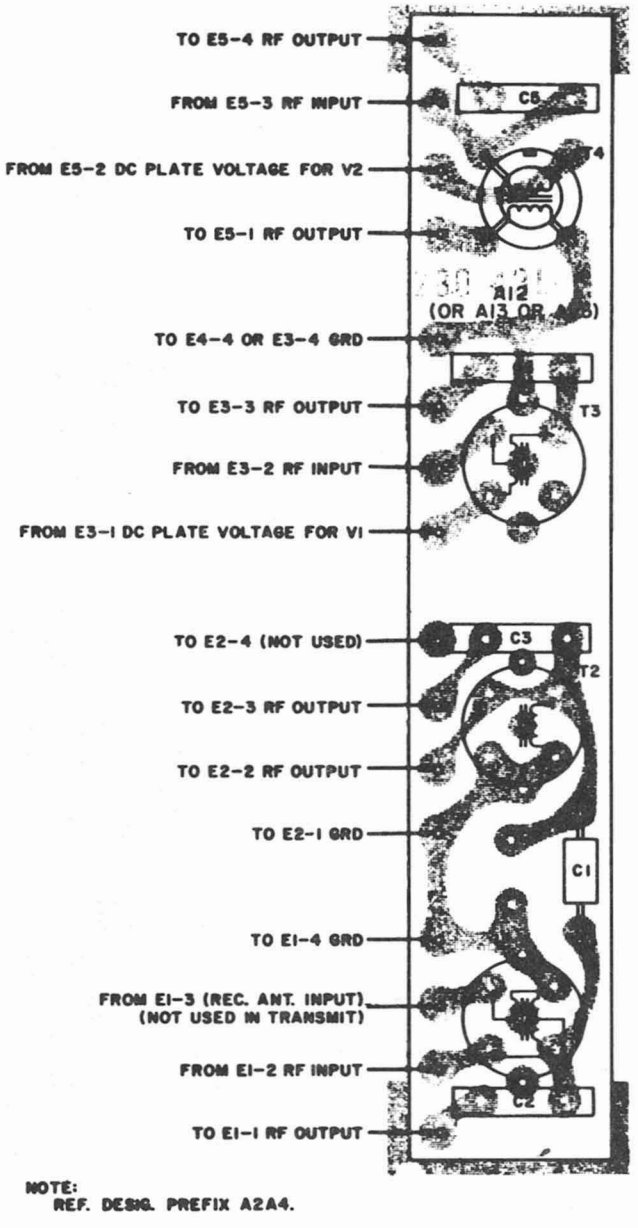

Figure 5-41. Megacycle Assembly A12, A13, or A23 (Foil Side Up), Component Location

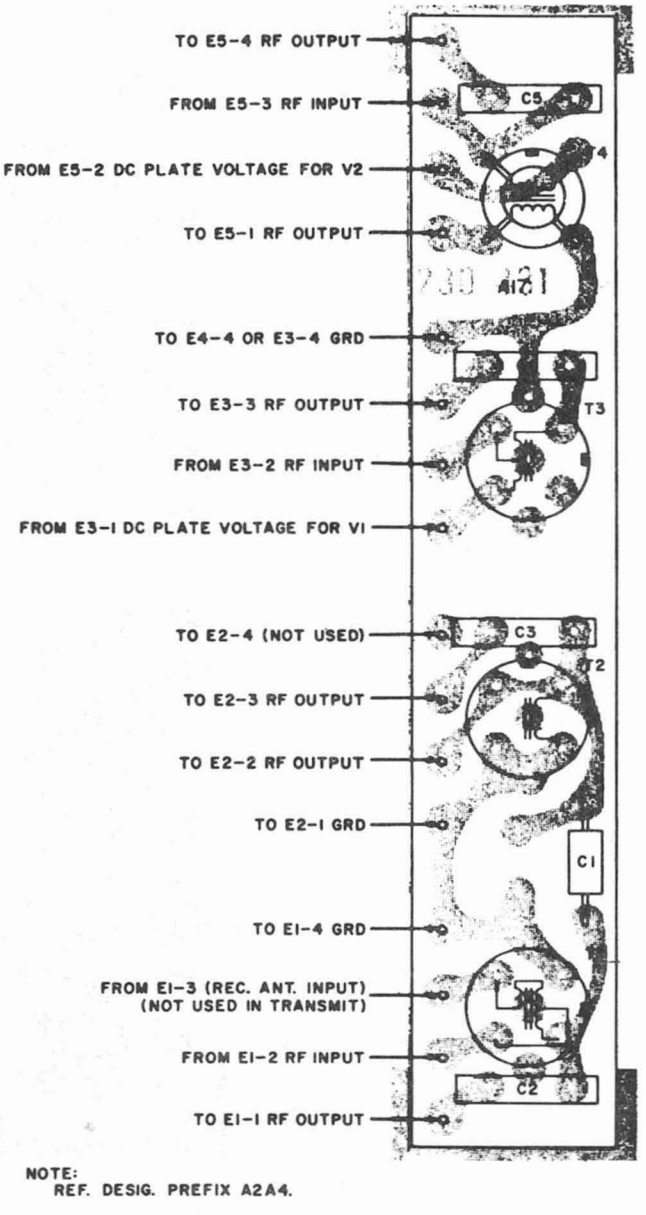

Figure 5-42. Megacycle Assembly A17 (Foil Side Up), Component Location

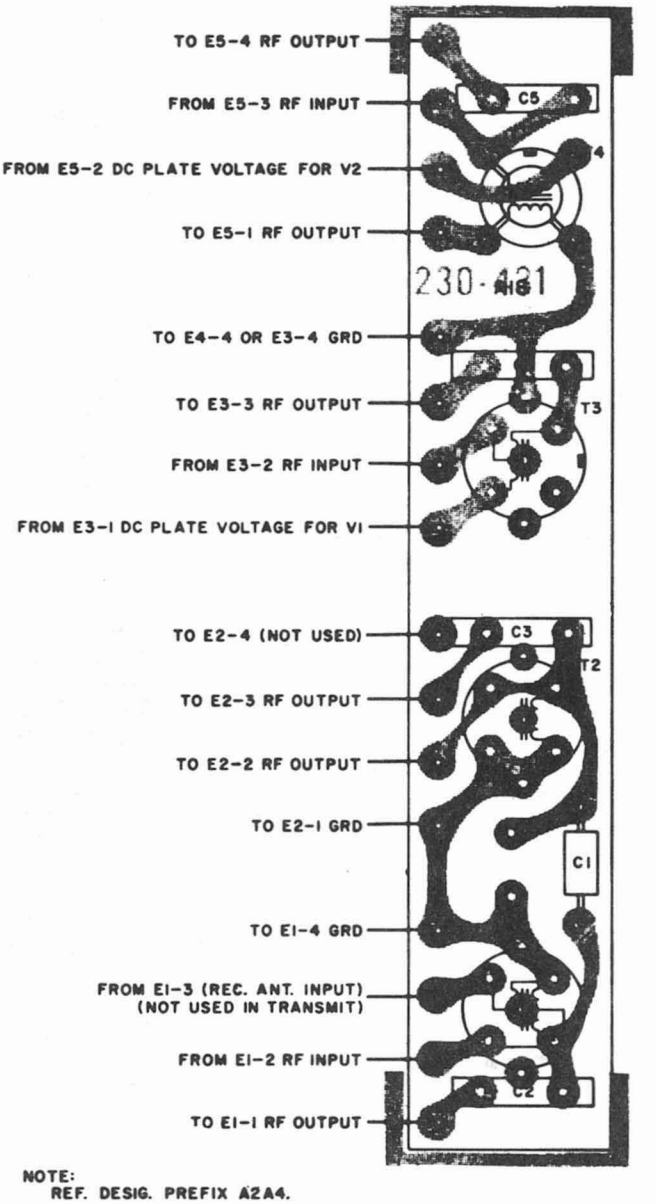

Figure 5-43. Megacycle Assembly A18 (Foil Side Up), Component Location

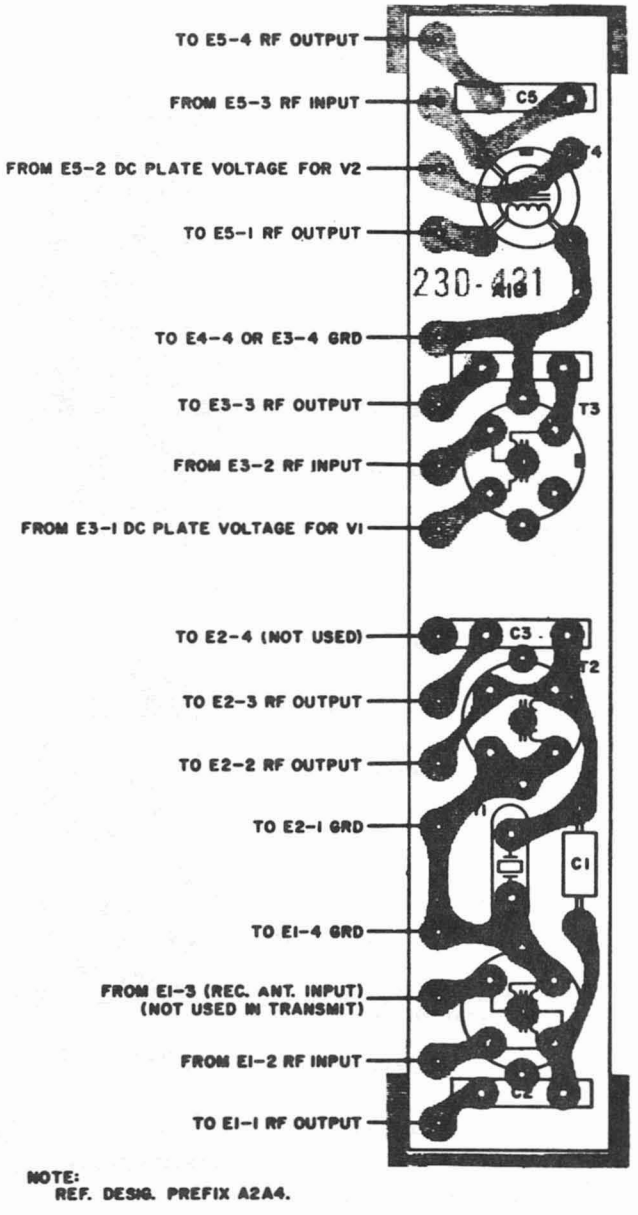

Figure 5-44. Megacycle Assembly A19 (Foil Side Up), Component Location

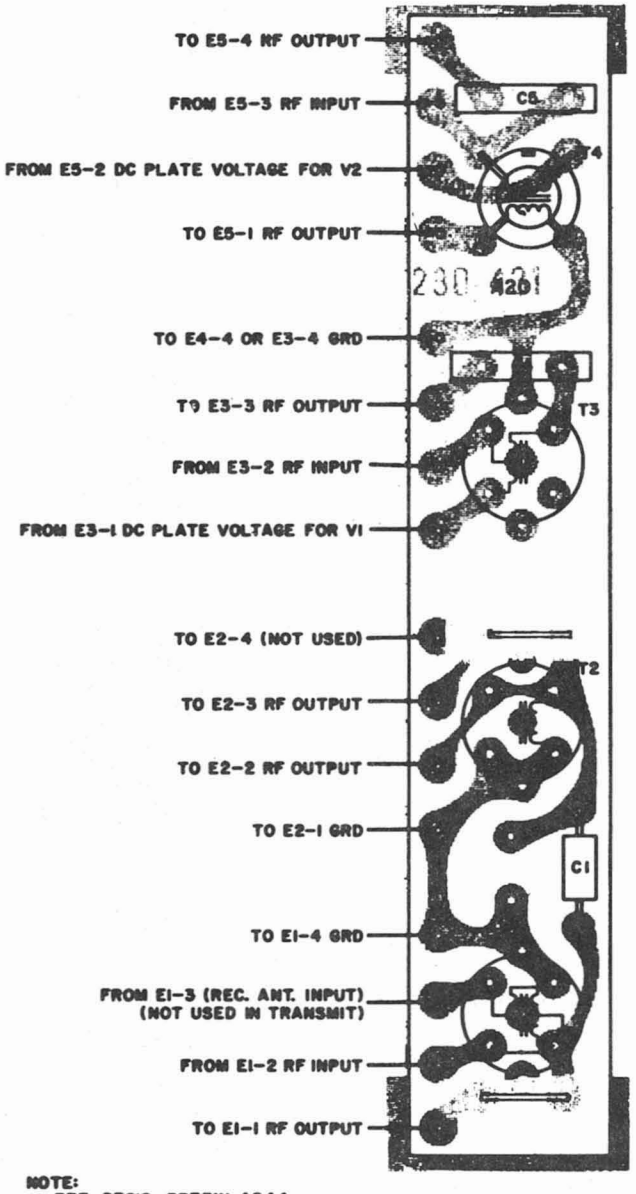

Figure 5-45. Megacycle Assembly A20 (Foil Side Up), Component Location

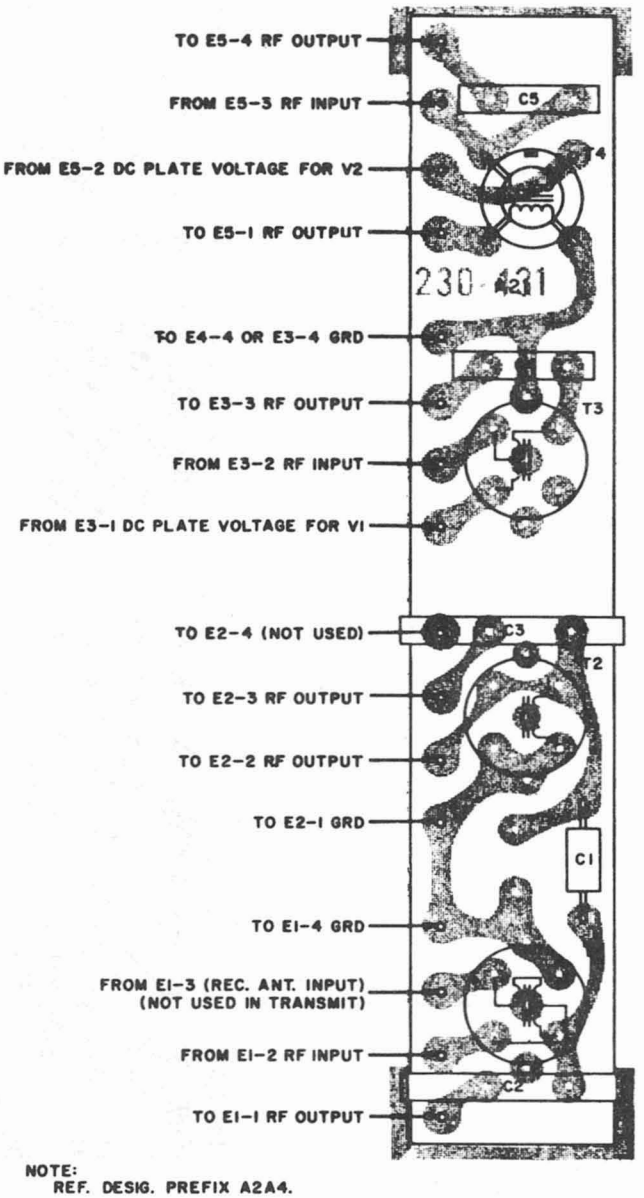

Figure 5-46. Megacycle Assembly A21 (Foil Side Up), Component Location

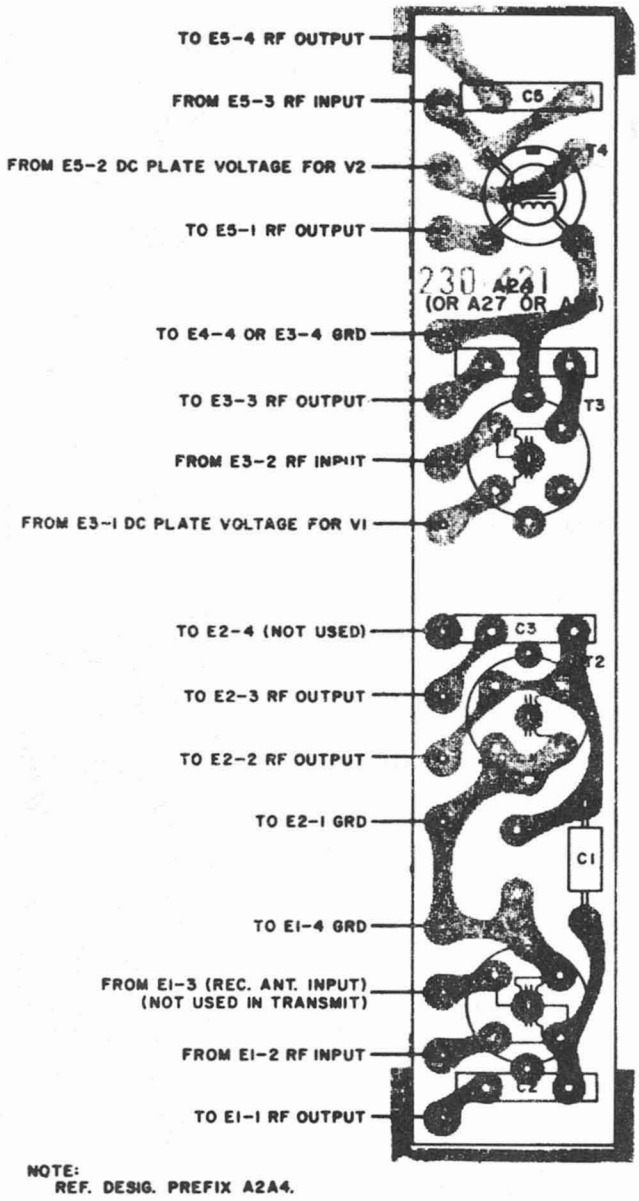

Figure 5-47. Megacycle Assembly A24, A27, or A28 (Foil Side Up), Component Location

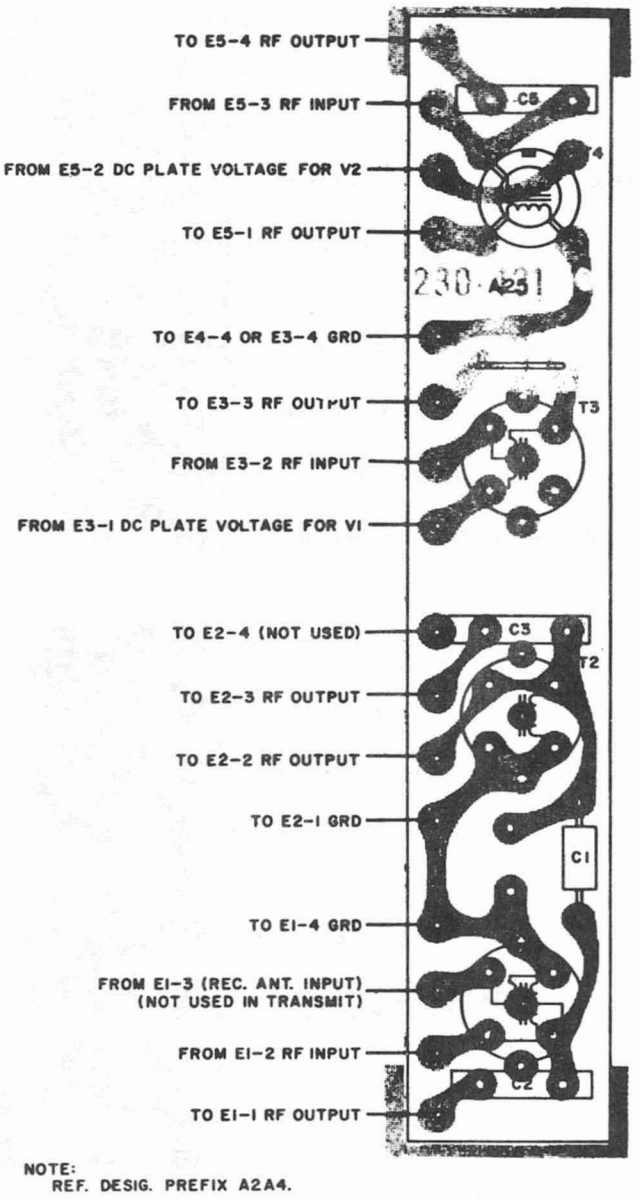

Figure 5-48. Megacycle Assembly A25 (Foil Side Up), Component Location

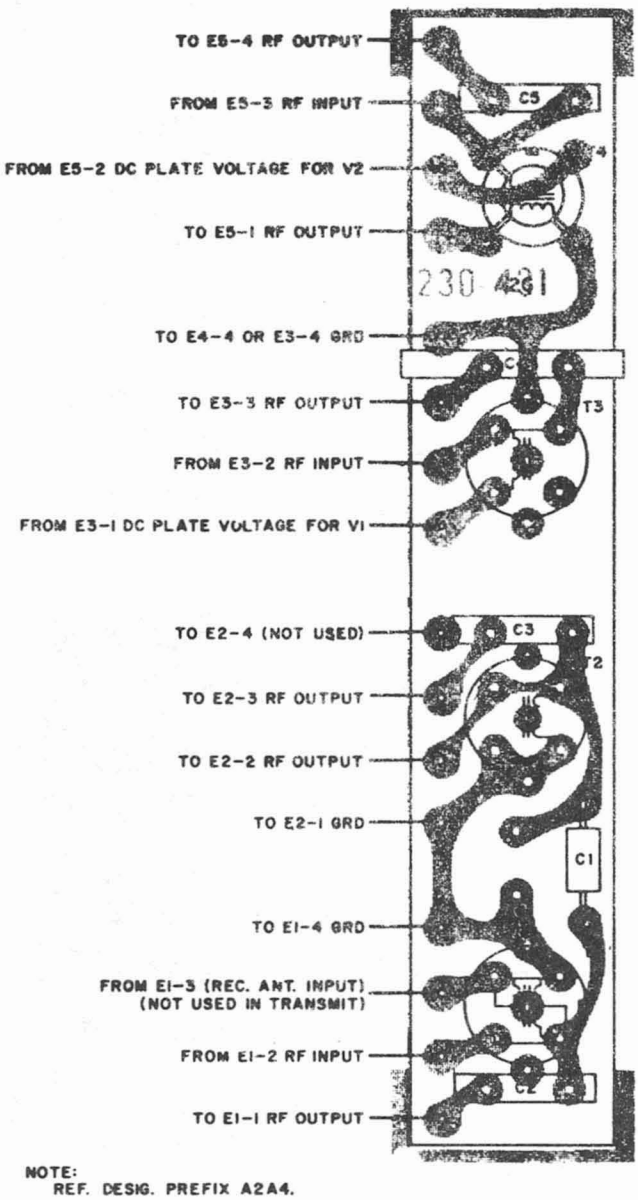

Figure 5-49. Megacycle Assembly A26 (Foil Side Up), Component Location

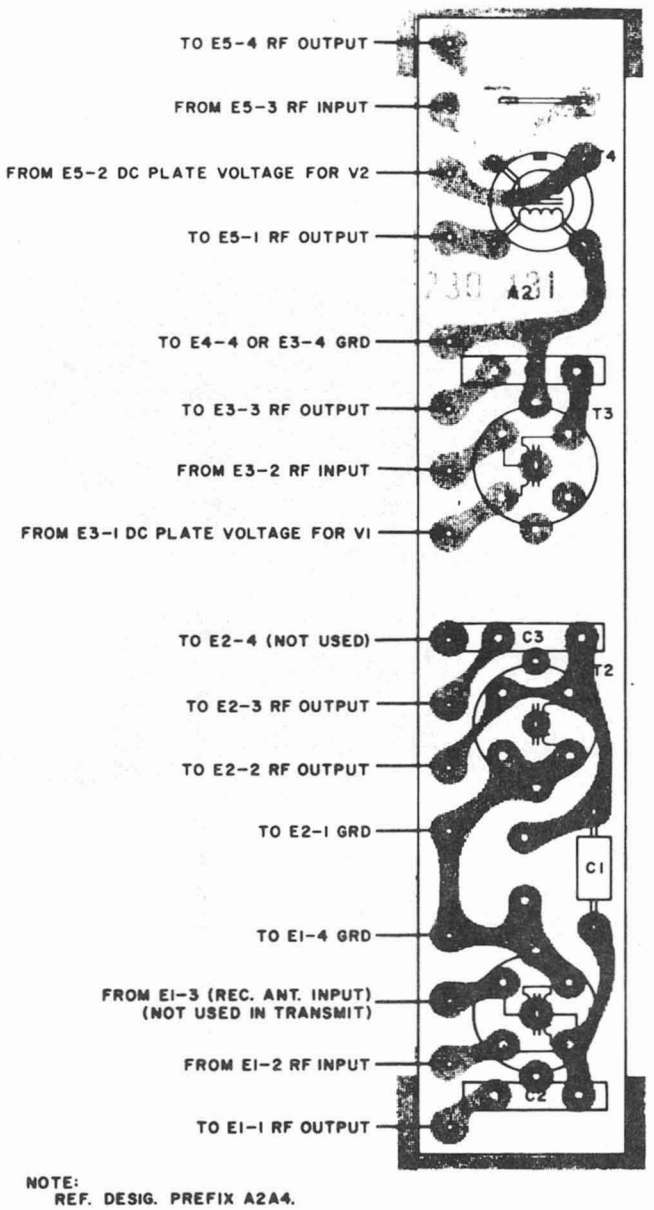

Figure 5-50. Megacycle Assembly A2 (Foil Side Up), Component Location

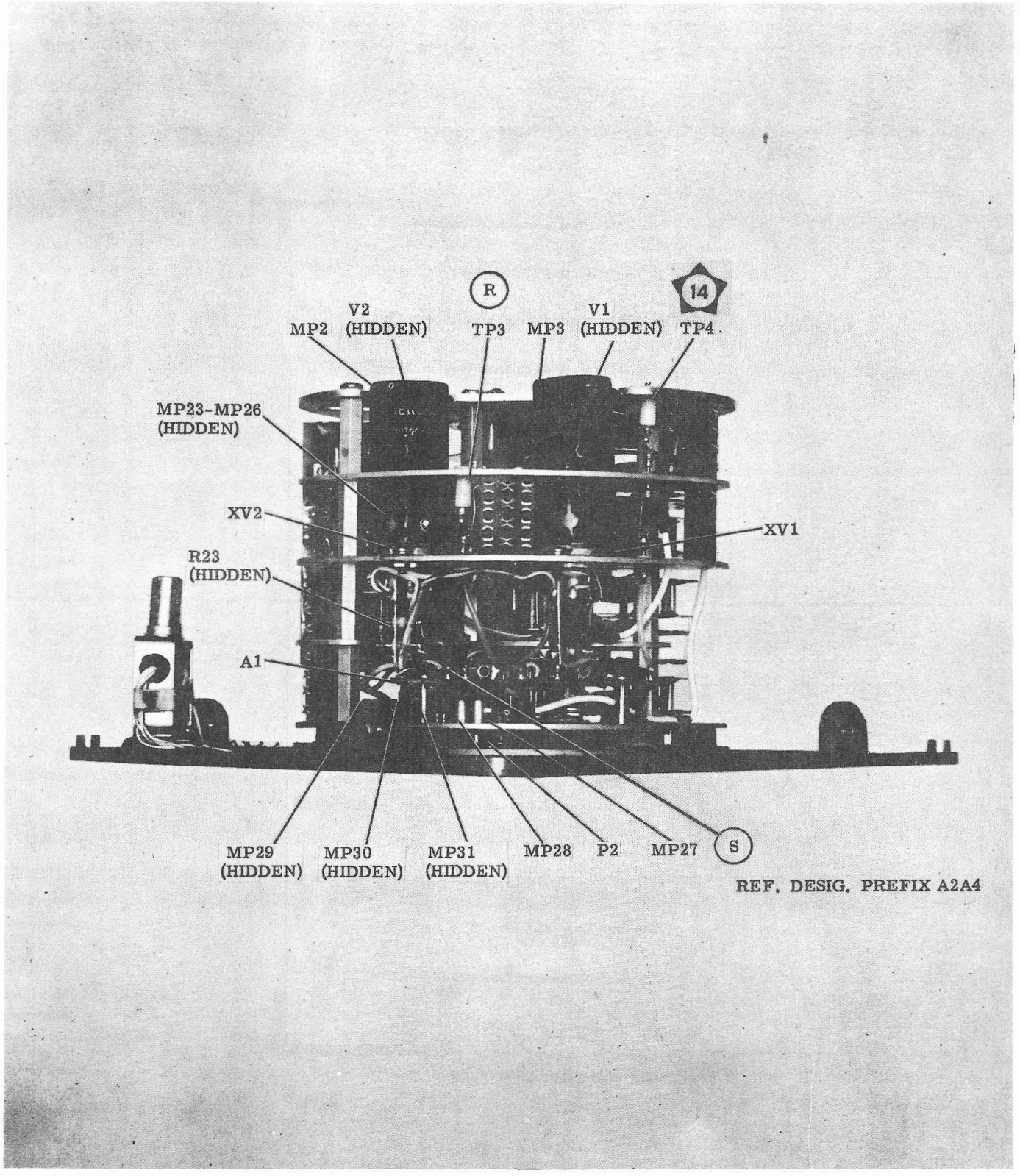

Figure 5-51. RF Amplifier Electronic Assembly, Turret Removed, Front and Left Side, Component and Test Point Location

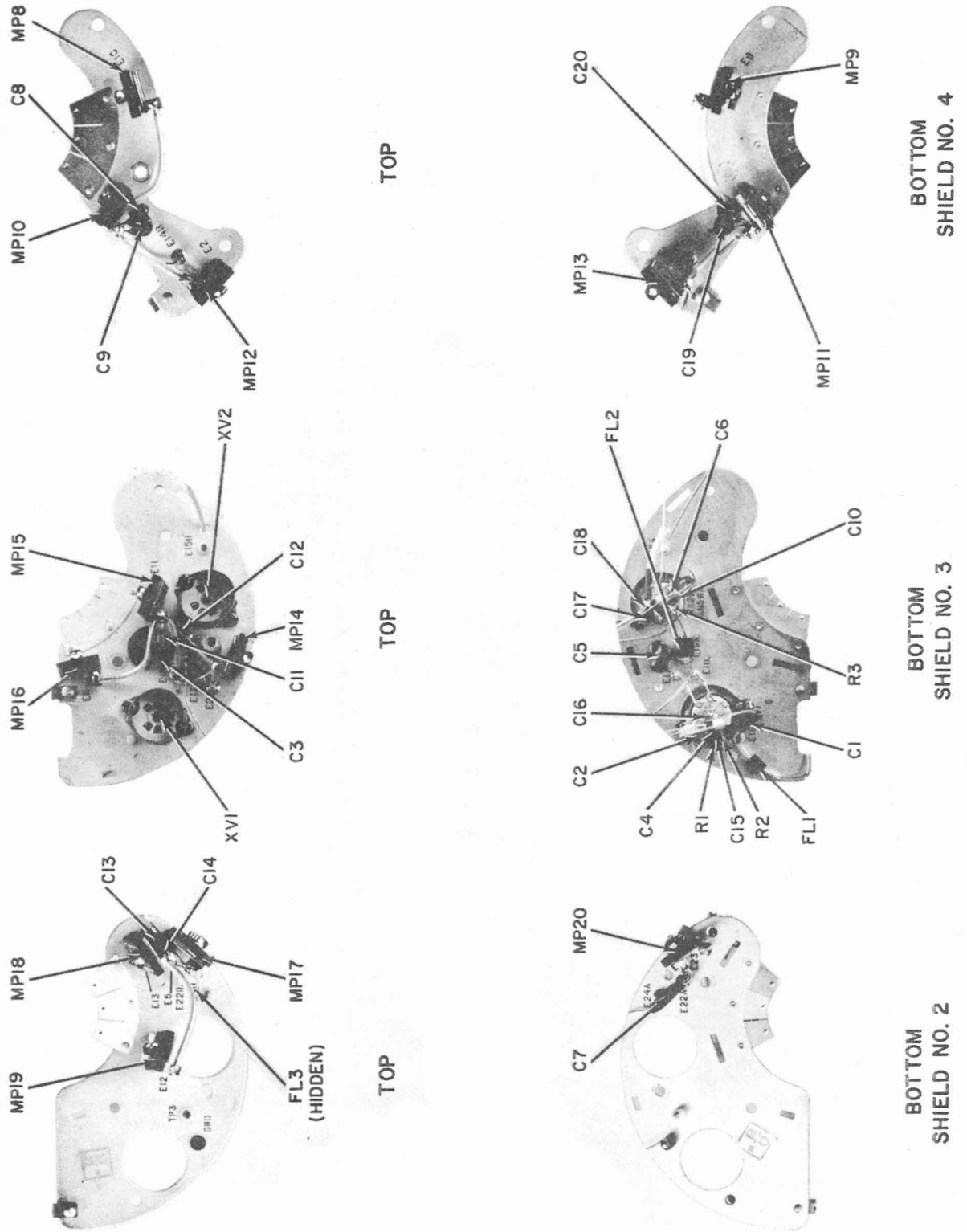

Figure 5-51a. RF Amplifier Electronic Assembly, Internal Shields, Component Location

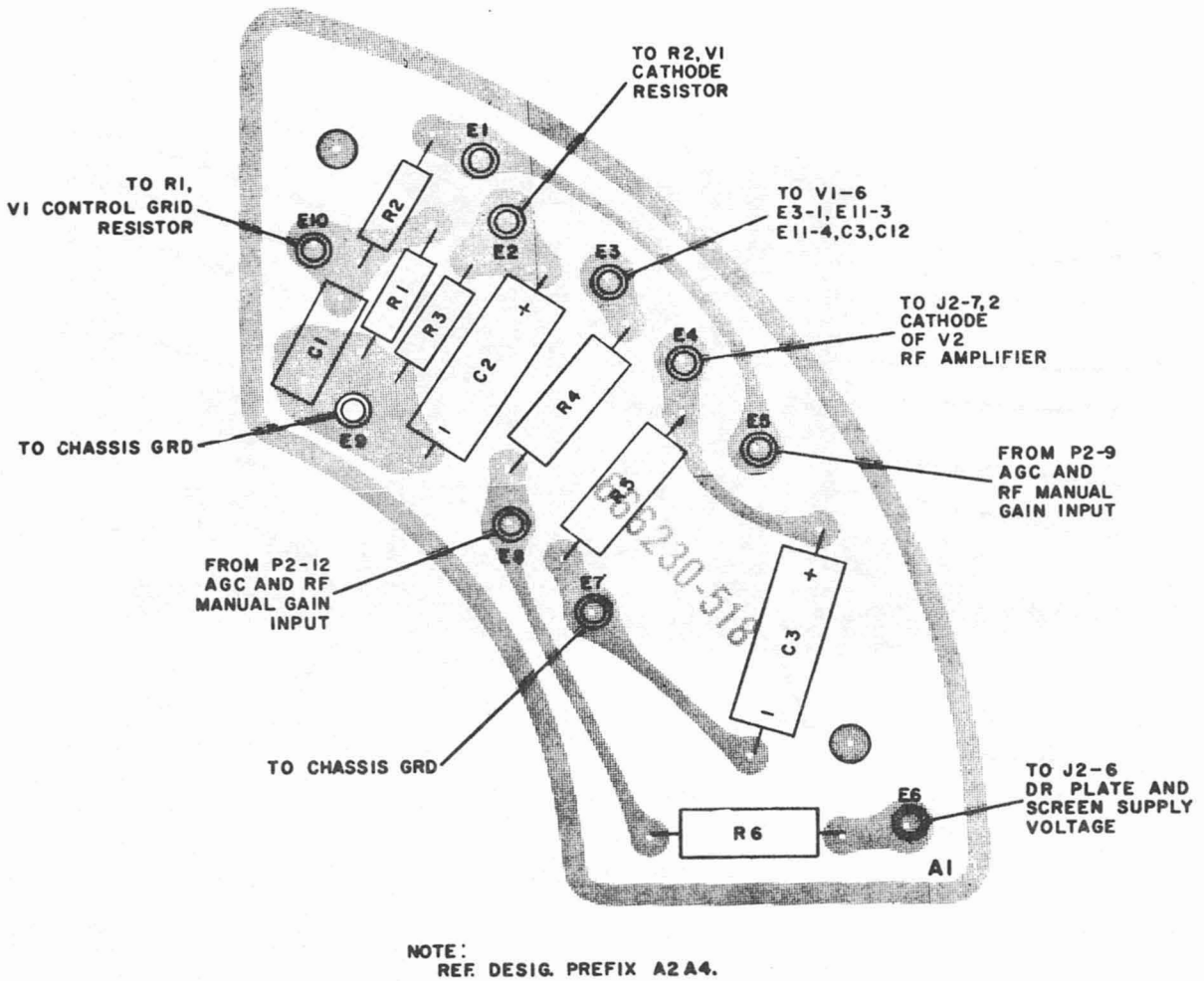

NOTE:
REF. DESIG. PREFIX A2 A4.

Figure 5-52. RF Amplifier Bias Circuit (Foil Side Up), Component Location

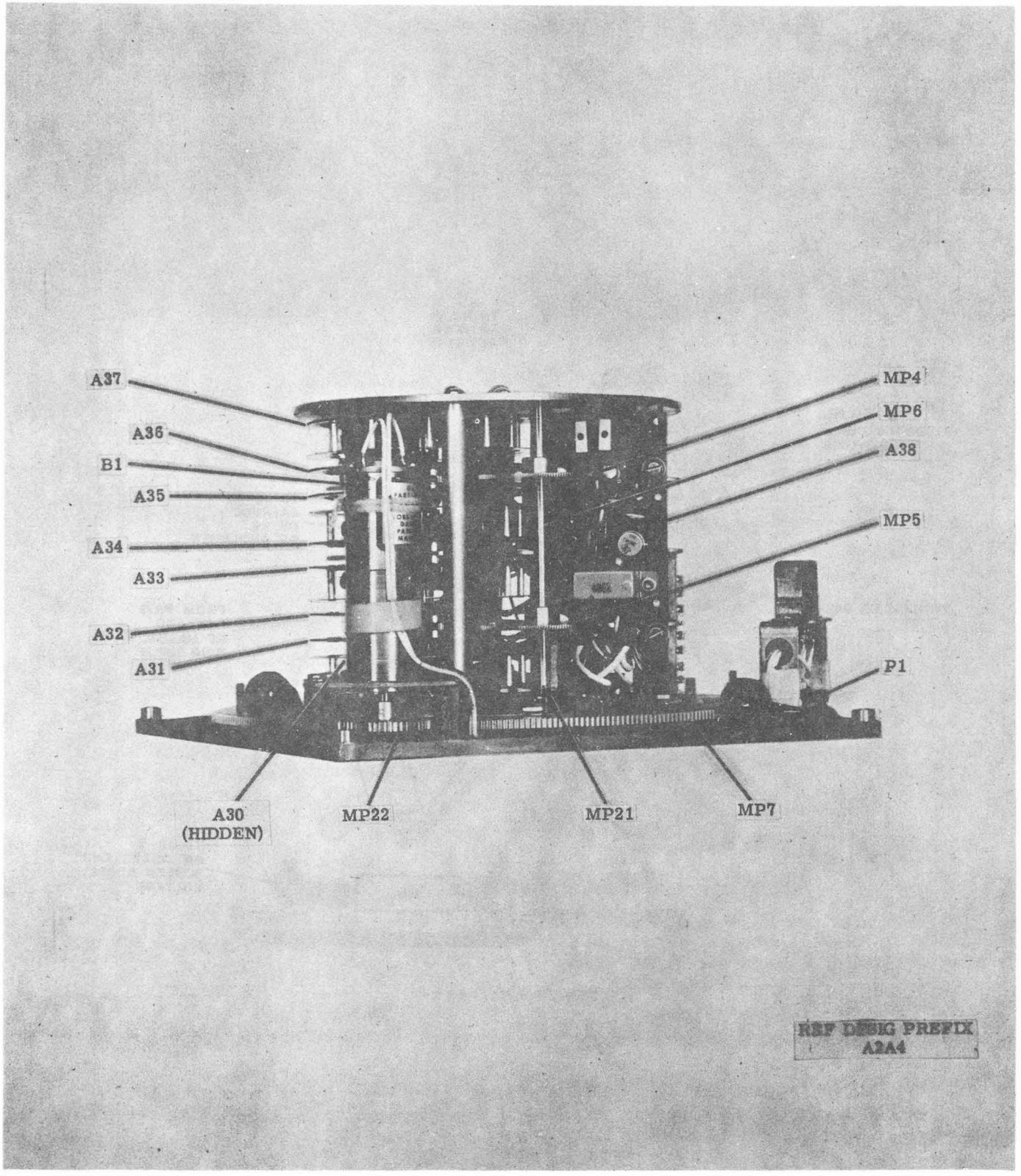

Figure 5-53. RF Amplifier Electronic Assembly, Turret Removed, Rear and Right Side, Component Location

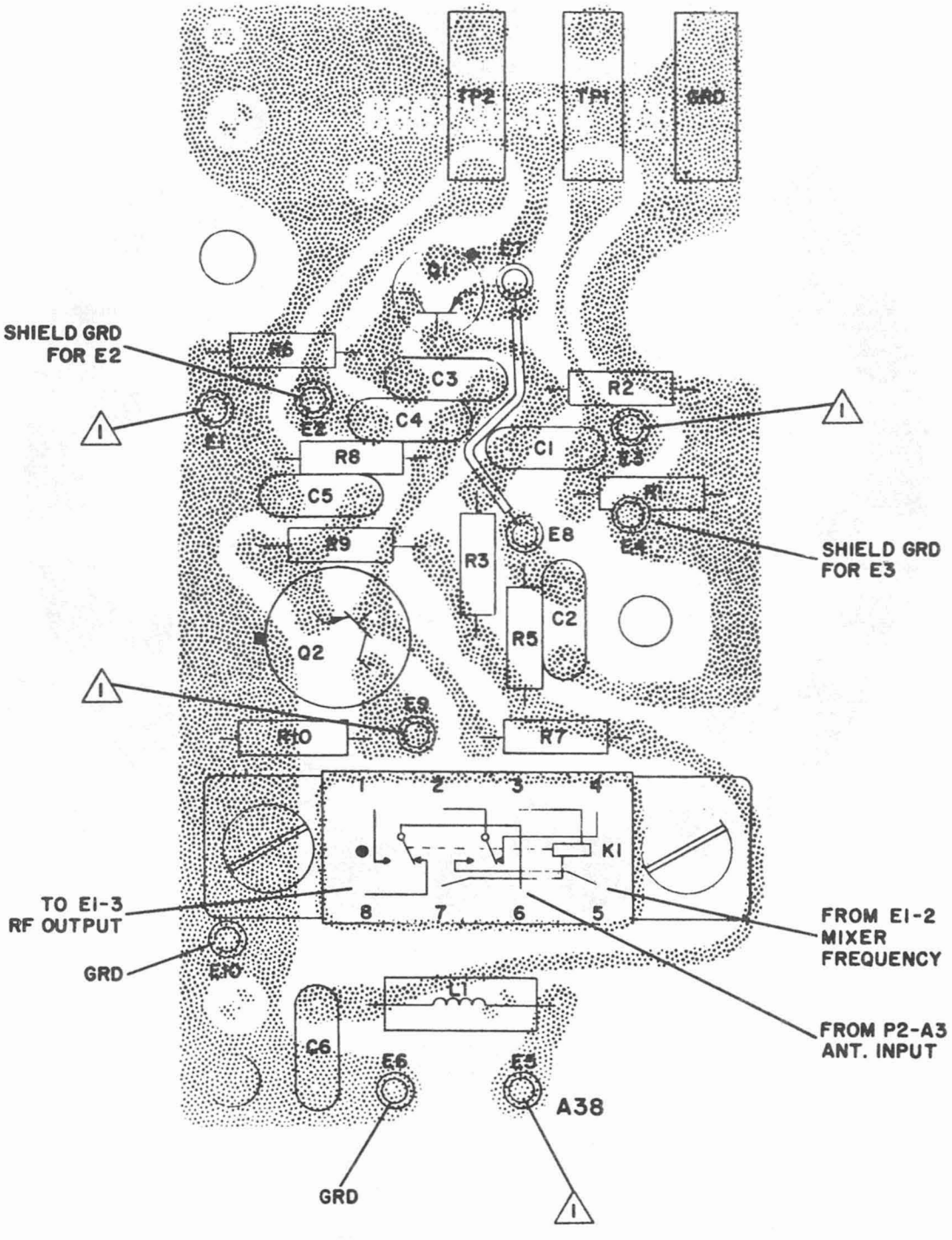

NOTES:

1. REF. DESIG. PREFIX A2A4.
2. (1) NOT USED IN RECEIVER.

Figure 5-54. HF Mixer/Amplifier (Foil Side Up), Component Location

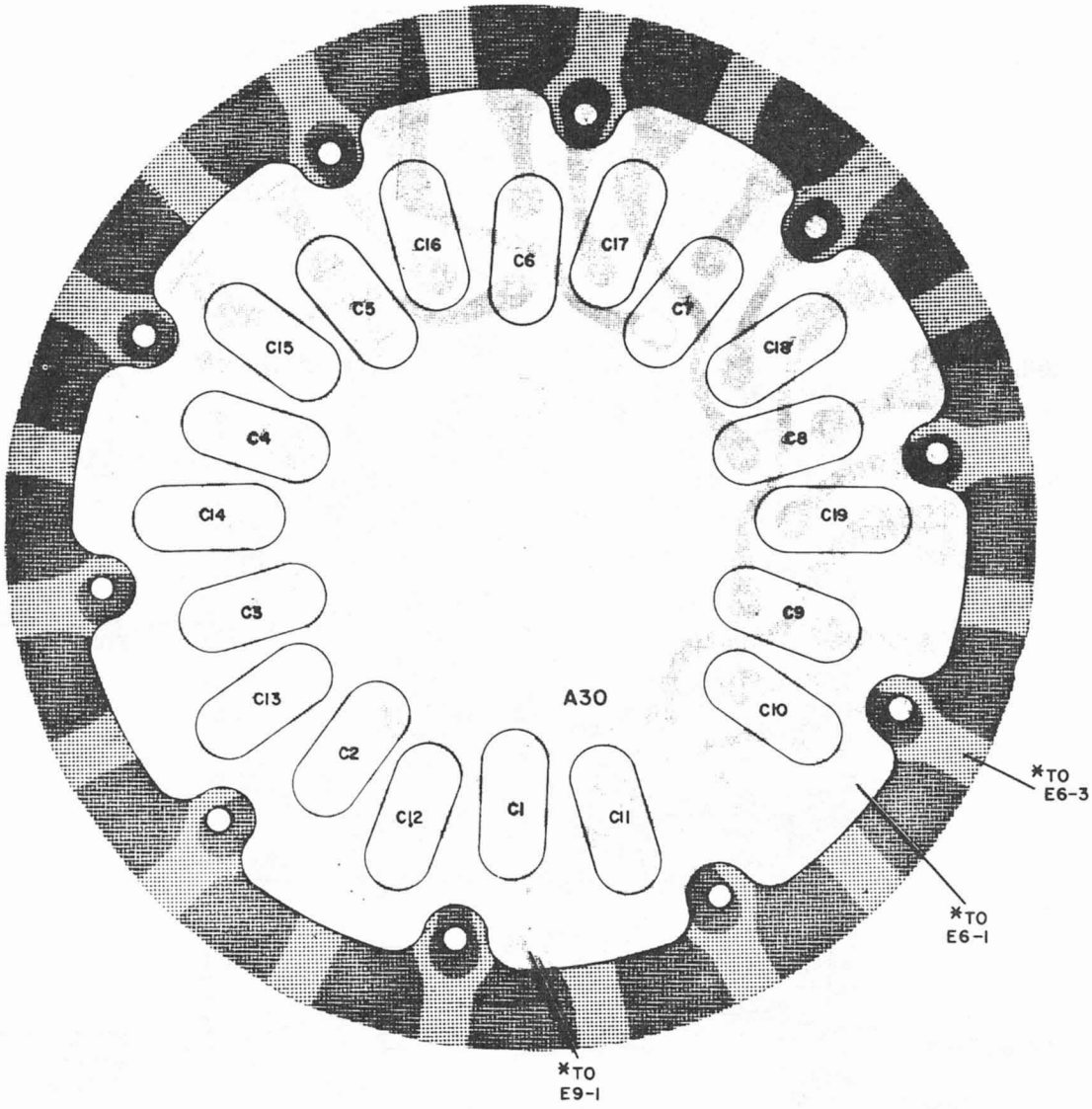

NOTES:
1. REF. DESIG. PREFIX A2A4.
2. * TURRET CONTACT TERMINATIONS FOR C1/C10 TYPICAL OF EACH OF THE 10 TURRET POSITIONS. SEE CHART.

C1/C10	.00 MC
C2/C11	.10 MC
C3/C12	.20 MC
C4/C13	.30 MC
C5/C14	.40 MC
C6/C15	.50 MC
C7/C16	.60 MC
C8/C17	.70 MC
C9/C18	.80 MC
C19	.90 MC

Figure 5-55. 100 KC Rotor Assembly A30 (Component Side Down), Component Location

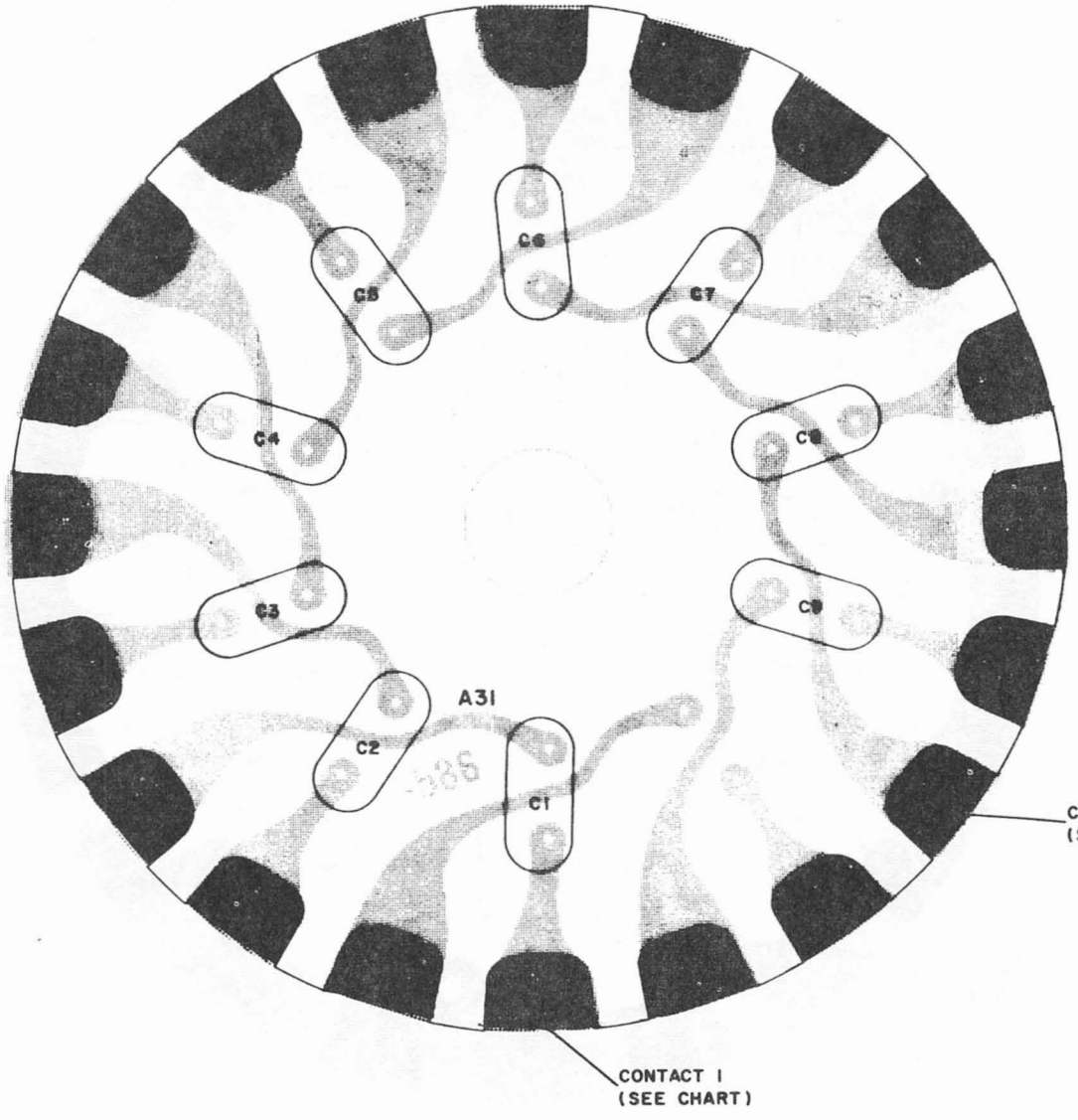

NOTES:
1. REF. DESIG. PREFIX A2A4.
2. TYPICAL CONFIGURATION FOR 10 KC ROTOR ASSEMBLY BOARDS A31, A32 AND A35. SEE CHART BELOW FOR CONTACT TERMINATIONS.

C1	.00MC
C2	.01MC
C3	.02MC
C4	.03MC
C5	.04MC
C6	.05MC
C7	.06MC
C8	.07MC
C9	.08MC

TURRET CONTACT TERMINATIONS FOR C1, TYPICAL OF EACH OF THE 10 POSITIONS OF THE TURRET			
	BOARD A31	BOARD A32	BOARD A35
CONTACT 1	CONNECTS TO E6-2	CONNECTS TO E7-1	CONNECTS TO E11-2
CONTACT 2	CONNECTS TO E6-4	CONNECTS TO E7-3	CONNECTS TO E11-4

Figure 5-56. 10 KC Rotor Assembly A31 (Component Side Down), Component Location

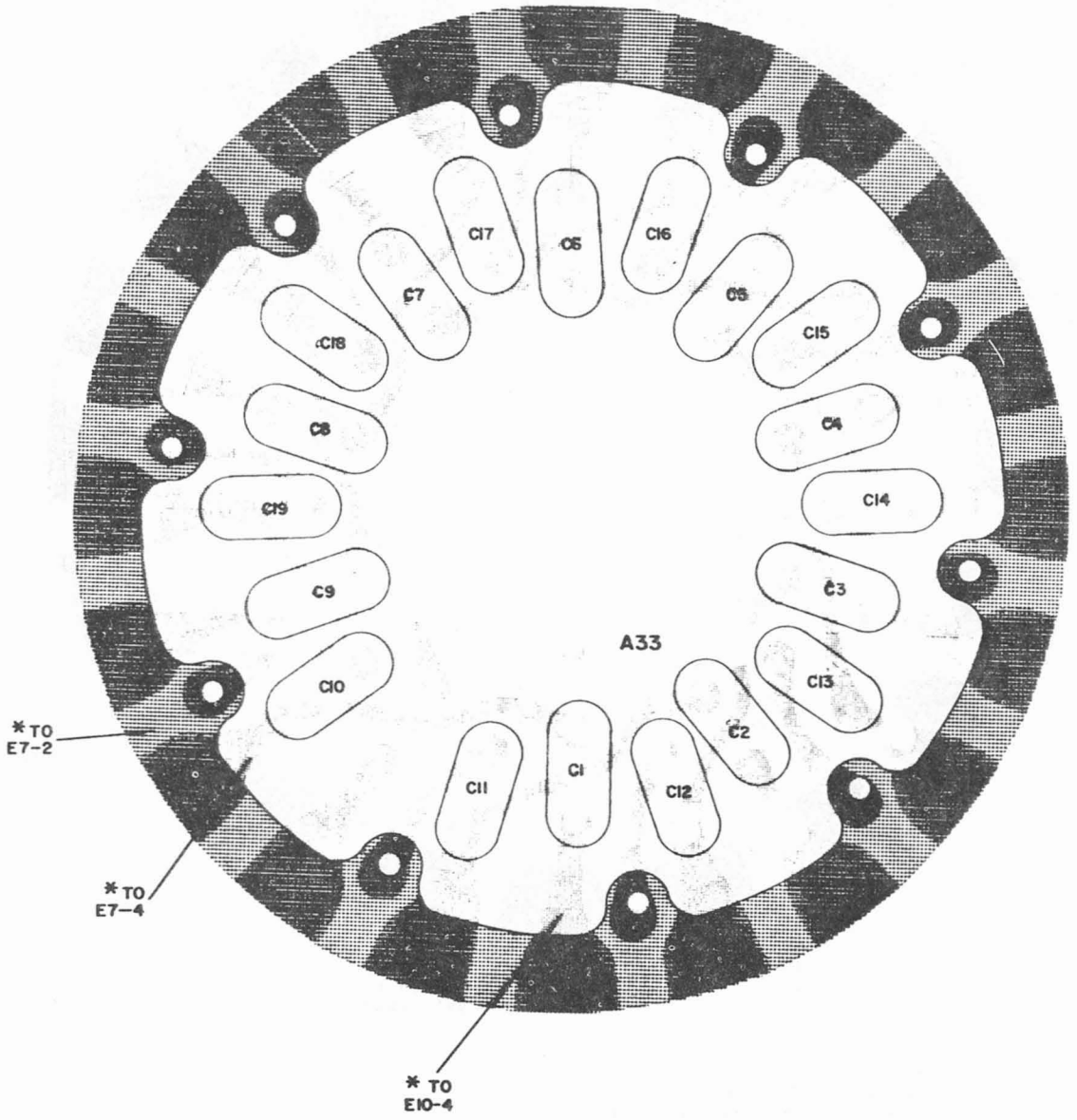

NOTES:
1. REF. DESIG. PREFIX A2A4
2. *TURRET CONTACT TERMINATIONS FOR C1/C10, TYPICAL OF EACH OF THE 10 POSITIONS OF THE TURRET, SEE CHART.

C1/C10	.00 MC
C2/C11	.10 MC
C3/C12	.20 MC
C4/C13	.30 MC
C5/C14	.40 MC
C6/C15	.50 MC
C7/C16	.60 MC
C8/C17	.70 MC
C9/C18	.80 MC
C19	.90 MC

Figure 5-57. 100 KC Rotor Assembly A33 (Component Side Down), Component Location

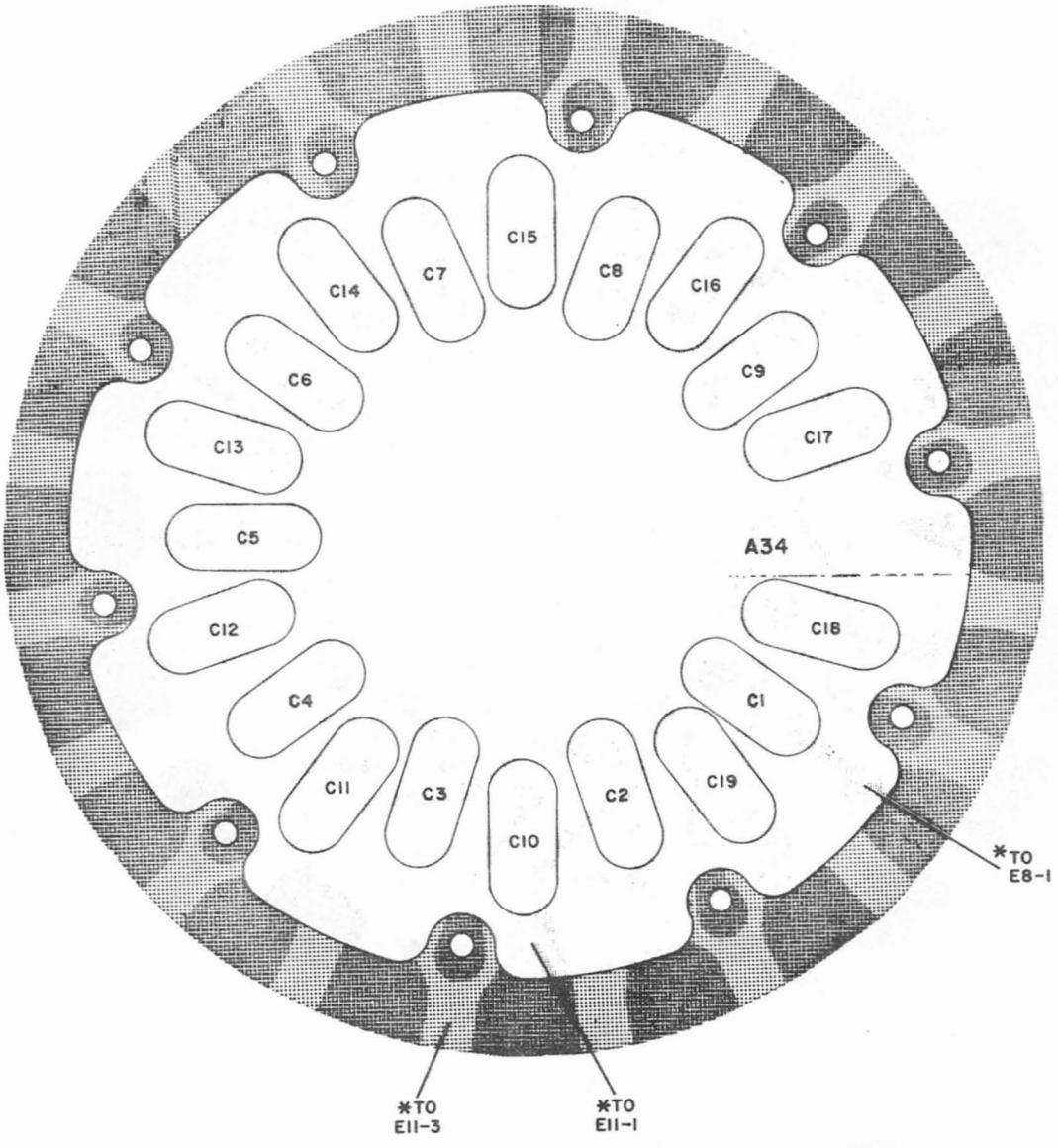

NOTES:
1. REF. DESIG. PREFIX A2A4.
2. * TURRET CONTACT TERMINATIONS FOR C1/C10, TYPICAL OF EACH OF THE 10 POSITIONS OF THE TURRET, SEE CHART.

C1/C10	.00 MC
C2/C11	.10 MC
C3/C12	.20 MC
C4/C13	.30 MC
C5/C14	.40 MC
C6/C15	.50 MC
C7/C16	.60 MC
C8/C17	.70 MC
C9/C18	.80 MC
C19	.90 MC

Figure 5-58. 100 KC Rotor Assembly A34 (Component Side Down), Component Location

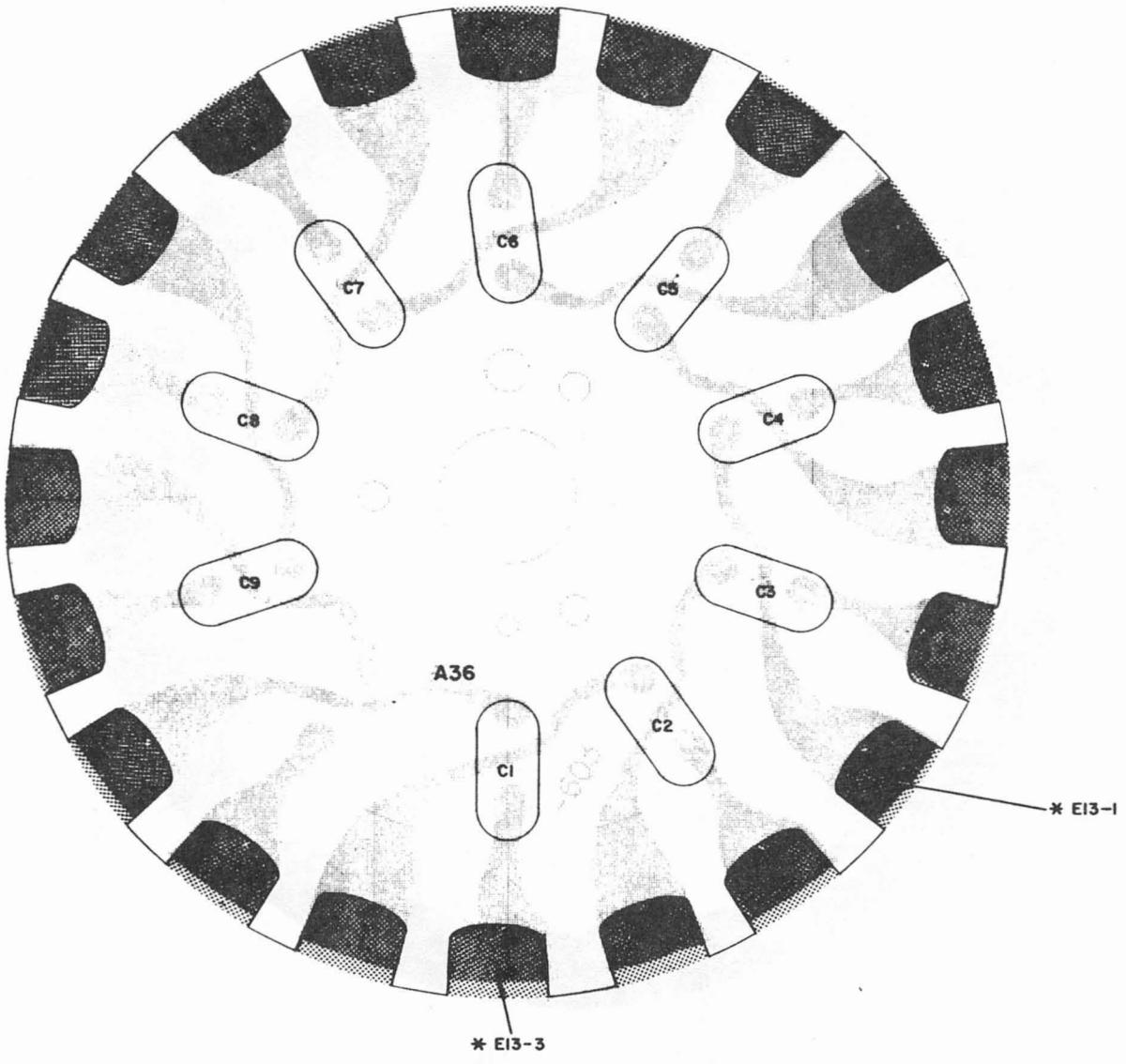

NOTES:
1. REF. DESIG. PREFIX A2A4.
2. * TURRET CONTACT TERMINATIONS FOR C1, TYPICAL OF EACH OF THE 10 POSITIONS OF THE TURRET, SEE CHART.

C1	.00 MC
C2	.01 MC
C3	.02 MC
C4	.03 MC
C5	.04 MC
C6	.05 MC
C7	.06 MC
C8	.07 MC
C9	.08 MC

Figure 5-59. 10 KC Rotor Assembly A36 (Component Side Down), Component Location

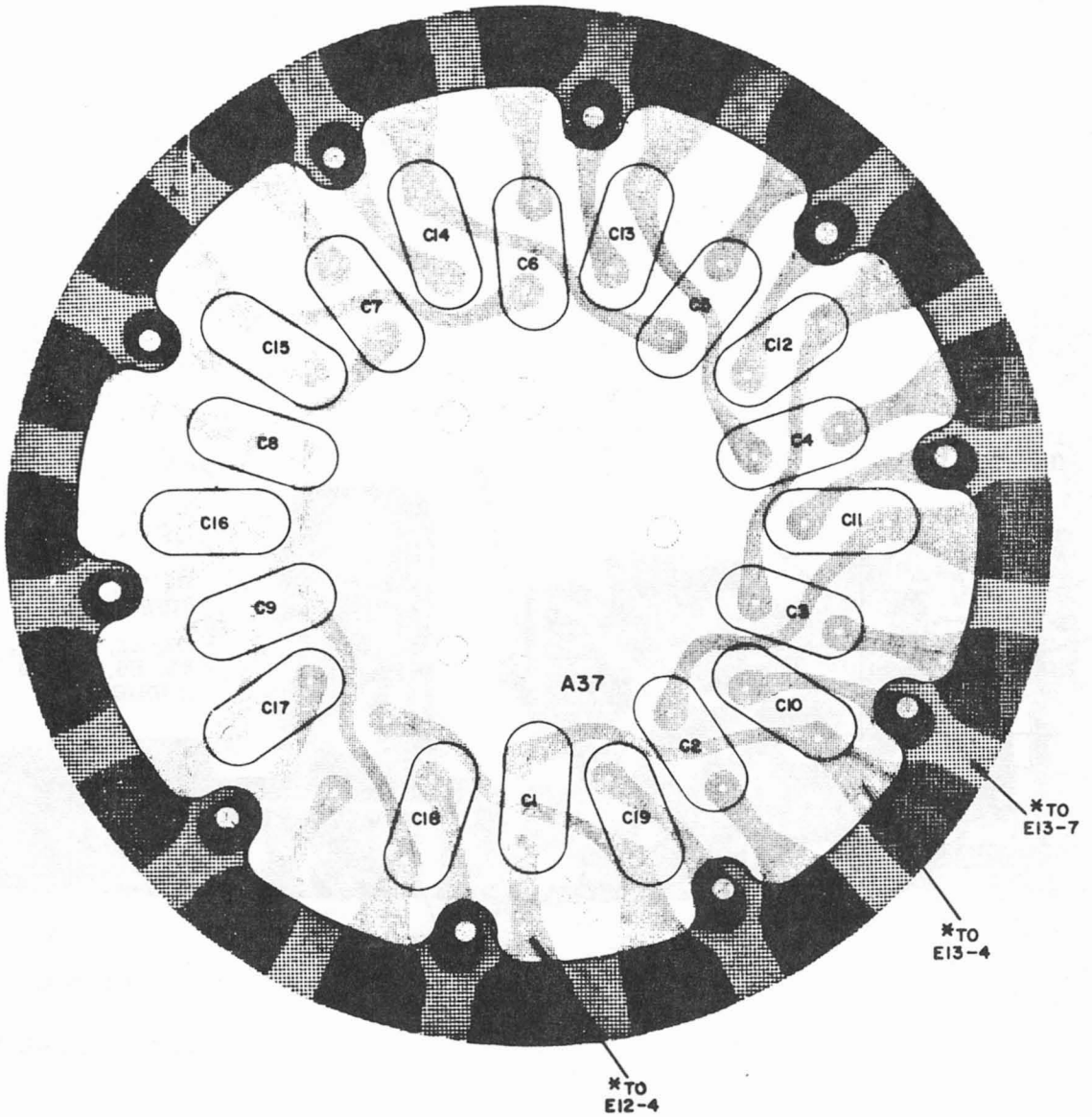

NOTES:
1. REF. DESIG. PREFIX A2A4.
2. *TURRET CONTACT TERMINATIONS FOR C1/C10 TYPICAL OF EACH OF THE 10 TURRET POSITIONS. SEE CHART.

C1/C10	.00 MC
C2/C11	.10 MC
C3/C12	.20 MC
C4/C13	.30 MC
C5/C14	.40 MC
C6/C15	.50 MC
C7/C16	.60 MC
C8/C17	.70 MC
C9/C18	.80 MC
C19	.90 MC

Figure 5-60. 100 KC Rotor Assembly A37 (Component Side Down), Component Location

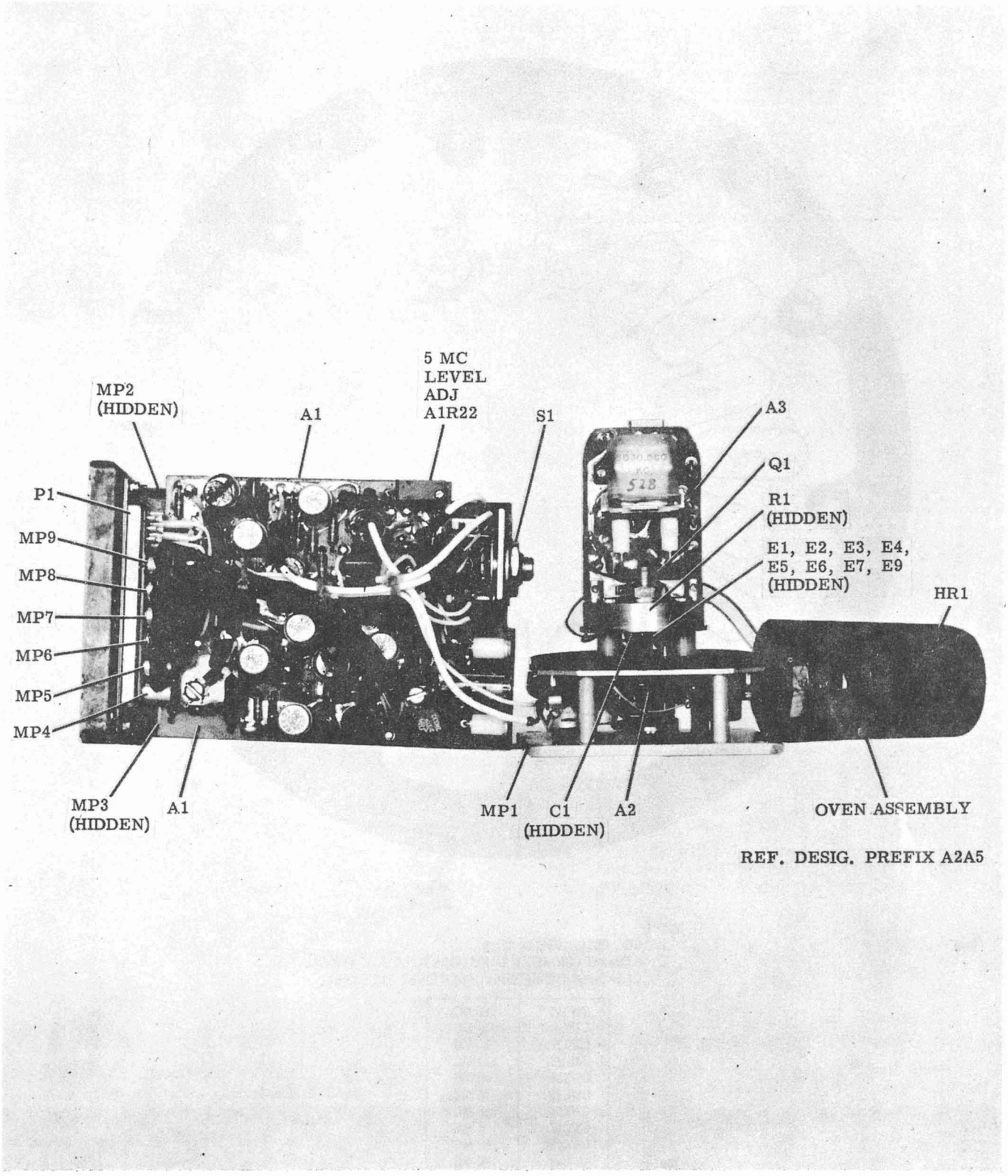

Figure 5-61. Frequency Standard Electronic Assembly, Front View, (Oven Disassembled), Component Location

NOTE:
REF. DESIG. PREFIX A2A5.

PARTS LOCATION INDEX

REF DESIG	LOC	REF DESIG	LOC
C1	7D	E30	6H
C2	7D	E31	6G
C3	5C	E32	3F
C4	7E	L1	5C
C5	7F	L2	4F
C6	5D	Q1	7D
C7	4D	Q2	6D
C8	6D	Q3	6C
C9	6D	Q4	4C
C10	7C	Q5	3E
C11	6E	Q6	7G
C12	5E	Q7	6F
C13	6D	R1	7D
C14	5C	R2	7D
C15	3D	R3	5B
C16	3C	R4	7E
C17	4D	R5	3E
C18	3E	R6	4E
C19	3D	R7	6B
C20	4F	R8	6B
C21	4F	R9	5B
C22	5G	R10	7B
C23	5G	R11	7B
C24	6G	R12	5B
C25	6F	R13	7D
C26	6C	R14	4B
CR1	5G	R15	4B
CR2	6G	R16	3B
DS1	7H	R17	3E
E1	8F	R18	4G
E3	6F	R19	3D
E4	3F	R20	3D
E5	4E	R21	4E
E6	3C	R22	3G
E7	6B	R23	5E
E8	3D	R24	4G
E9	2D	R25	5G
E10	4G	R26	7H
E13	5E	R27	7F
E14	5E	R28	6G
E15	3F	R29	7F
E17	5E	R30	7G
E18	6G	T1	7F
E19	6F	T2	4D
E20	6C	T3	6E
E22	4C	T4	3C
E25	3B	T5	3F
E26	4E	T6	5F
E27	3F	TP1	6H
E28	3G	TP2	7H

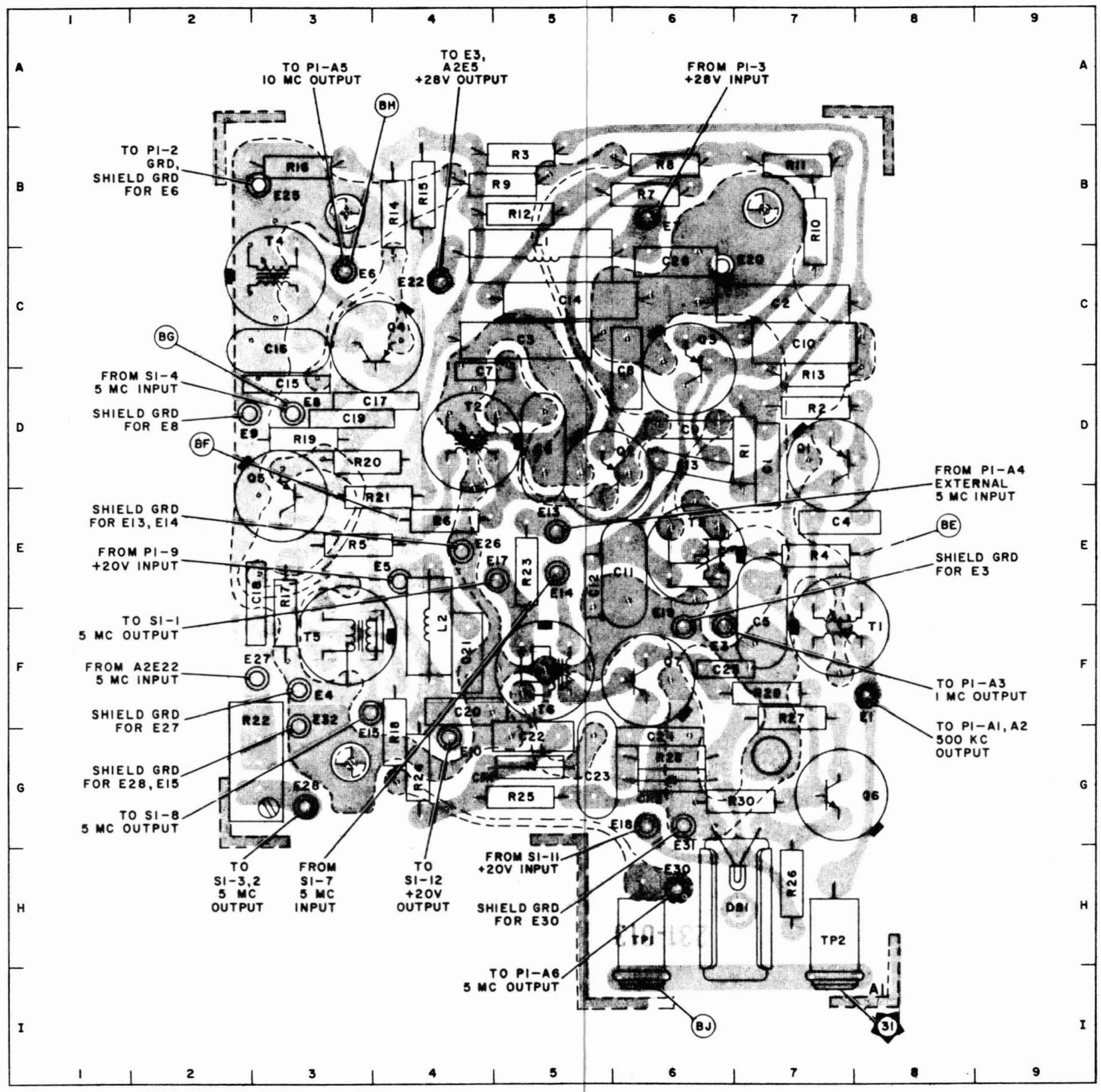

Figure 5-62. 5 MC Multiplier, Dividers, and Comparator (Foil Side Up), Component Location

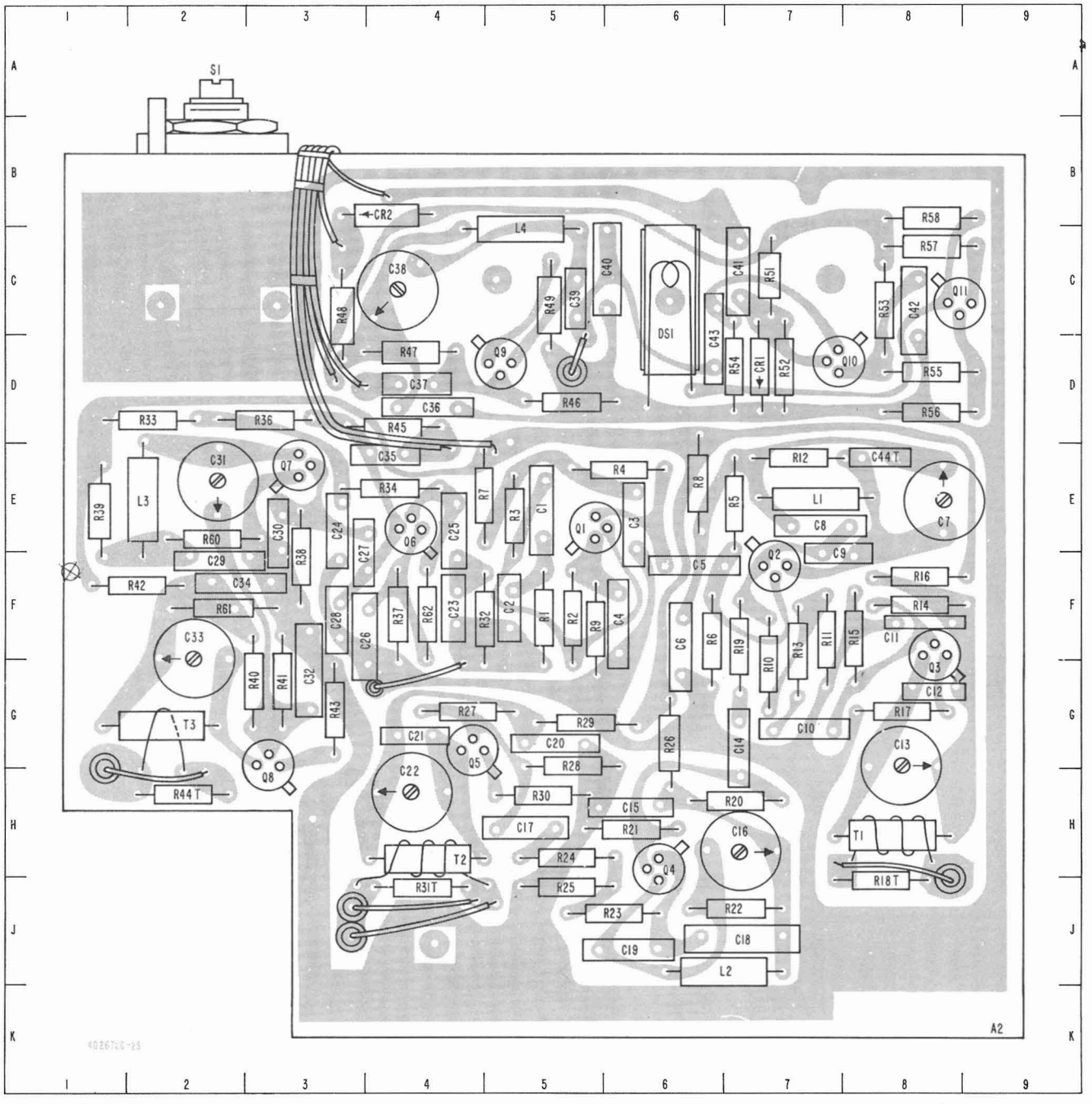

4026726-22

Figure 5-62A. 5 MC Multiplier, Dividers, and Comparator (Foil Side Up), Component Location (Used on R-1051B/URR)

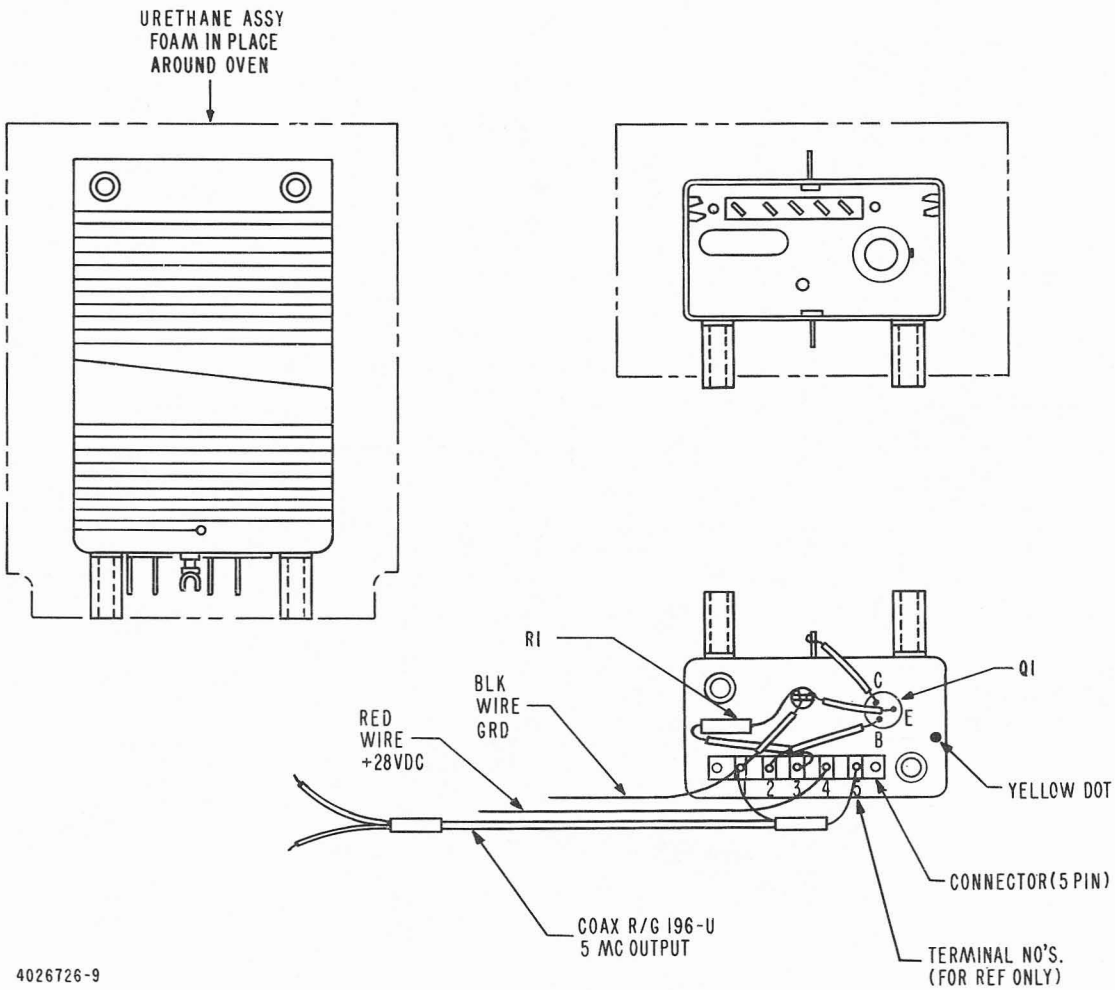

Figure 5-62B. Oven, Component Location (Used on R-1051B/URR)

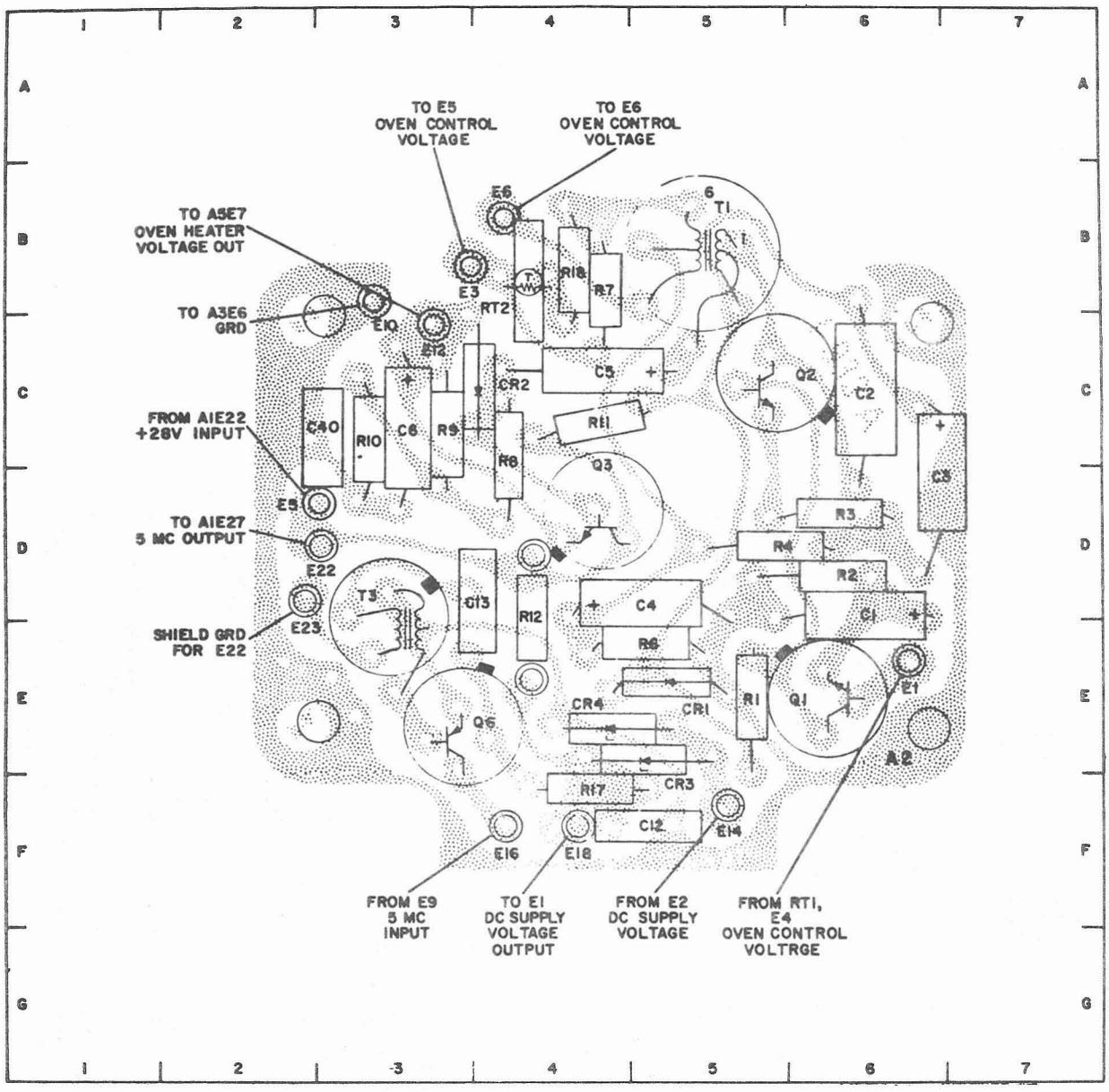

NOTE:
REF. DESIG. PREFIX A2A5.

PARTS LOCATION INDEX

REF DESIG	LOC	REF DESIG	LOC	REF DESIG	LOC	REF DESIG	LOC	REF DESIG	LOC
C1	6D	CR1	5E	E12	3B	Q6	3E	R10	3C
C2	6C	CR2	4C	E14	5F	R1	5E	R11	4C
C3	6D	CR3	5E	E16	4F	R2	6D	R12	4D
C4	5D	CR4	4E	E18	4F	R3	6D	R17	4F
C5	4C	E1	6E	E22	3D	R4	5D	R18	4B
C6	3C	E3	4B	E23	2D	R5	5E	RT2	4B
C12	5F	E5	3D	Q1	6E	R6	4B	T1	5B
C13	4D	E6	4B	Q2	5C	R7	4C	T3	3D
C40	3C	E10	3B	Q3	4D	R8	3C		

Figure 5-63. Oven Control and Buffer Amplifier (Foil Side Up), Component Location

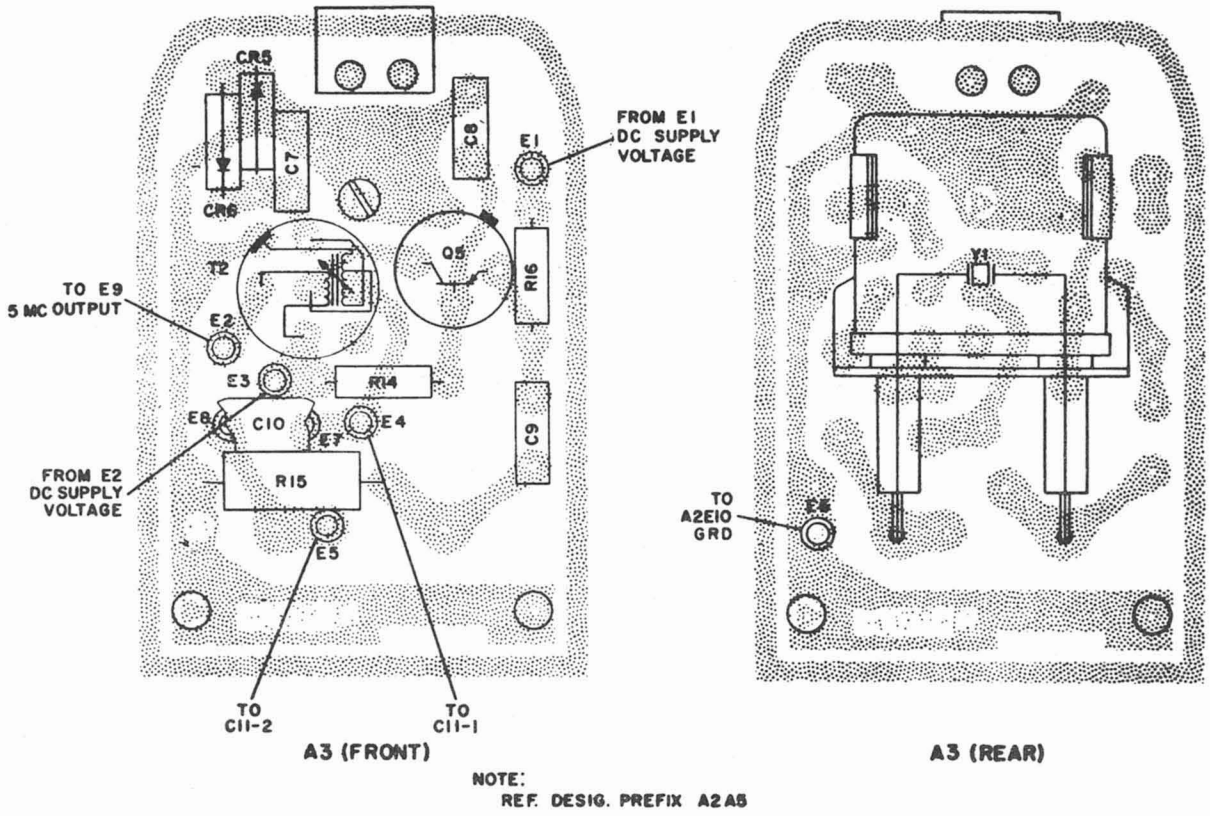

Figure 5-64. 5 MC Oscillator (Foil Side Up), Component Location

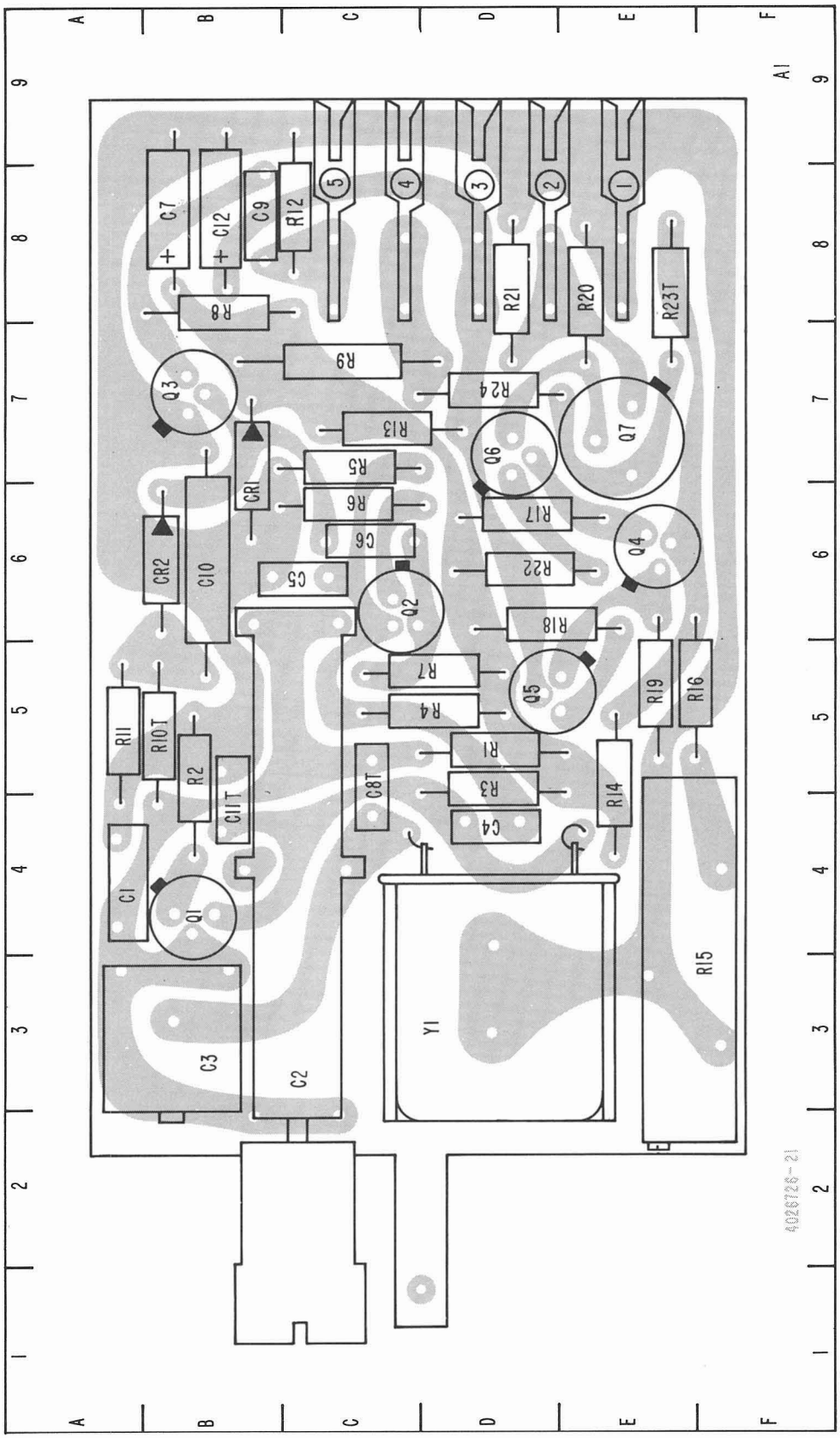

Figure 5-64A. 5 MC Oscillator (Foil Side Up), Component Location (Used on R-1051B/URR)

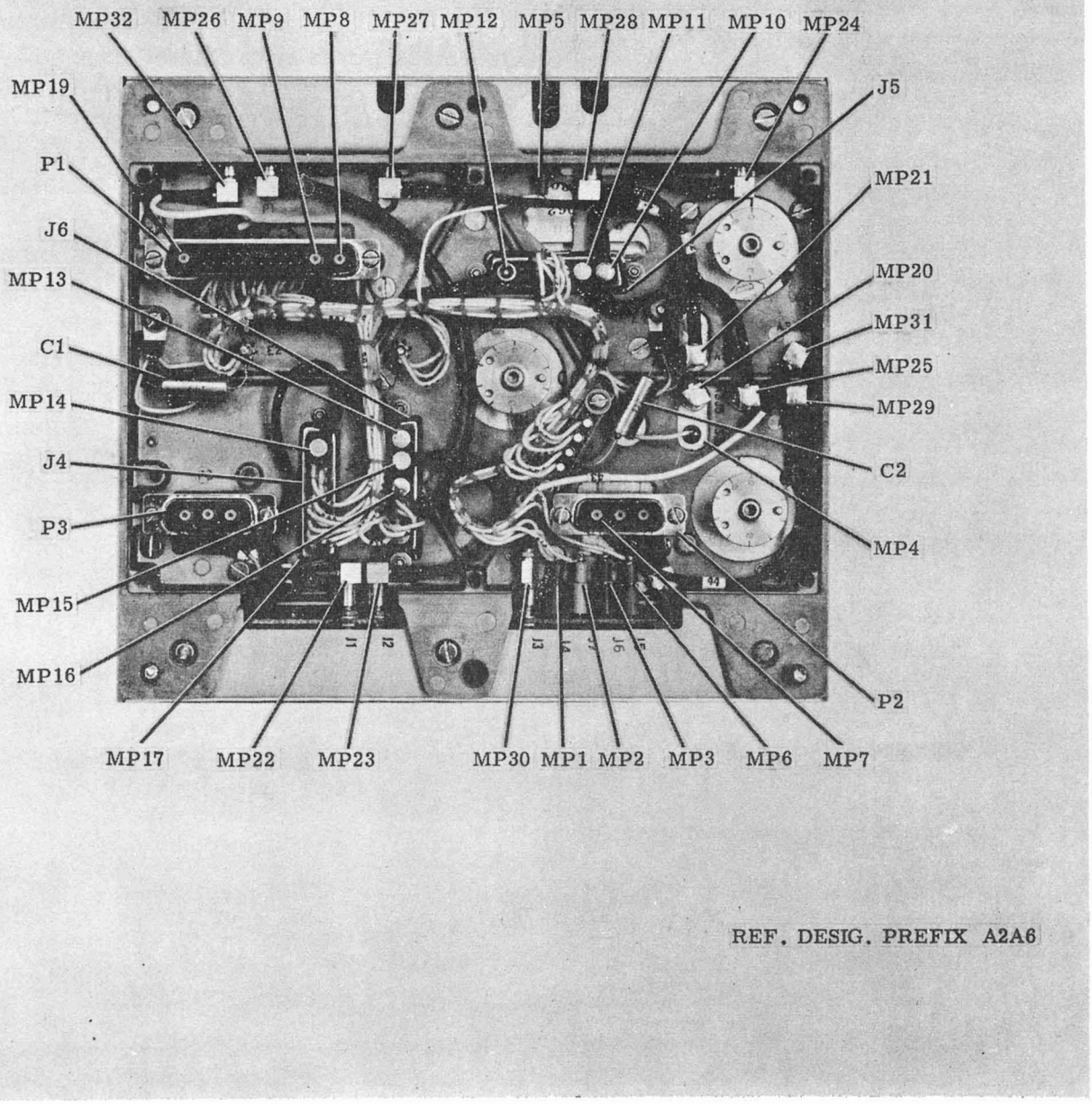

Figure 5-65. Translator/Synthesizer Electronic Assembly, Bottom View, Component Location

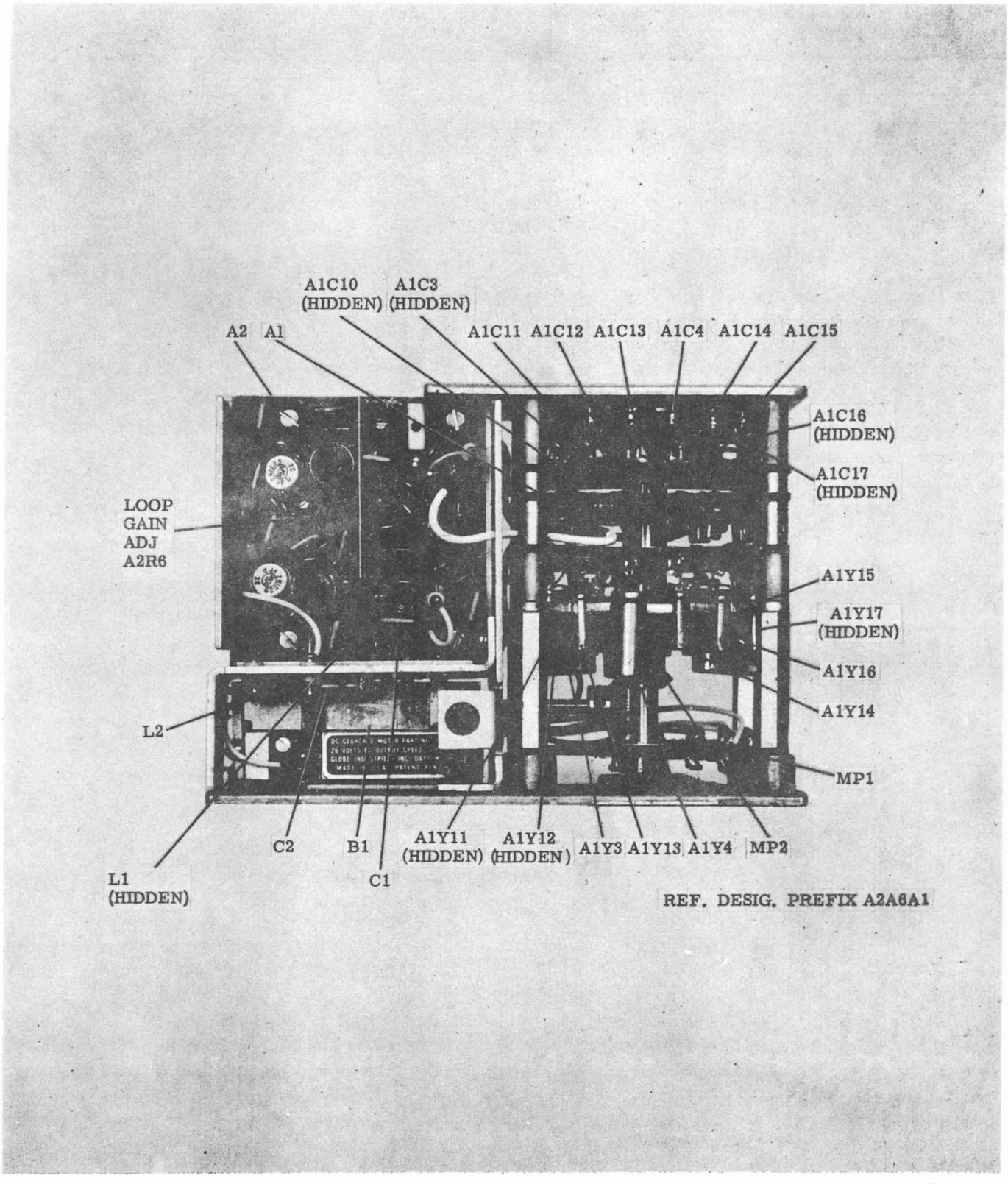

Figure 5-66. 1 MC Synthesizer Electronic Subassembly, Front View, Component Location

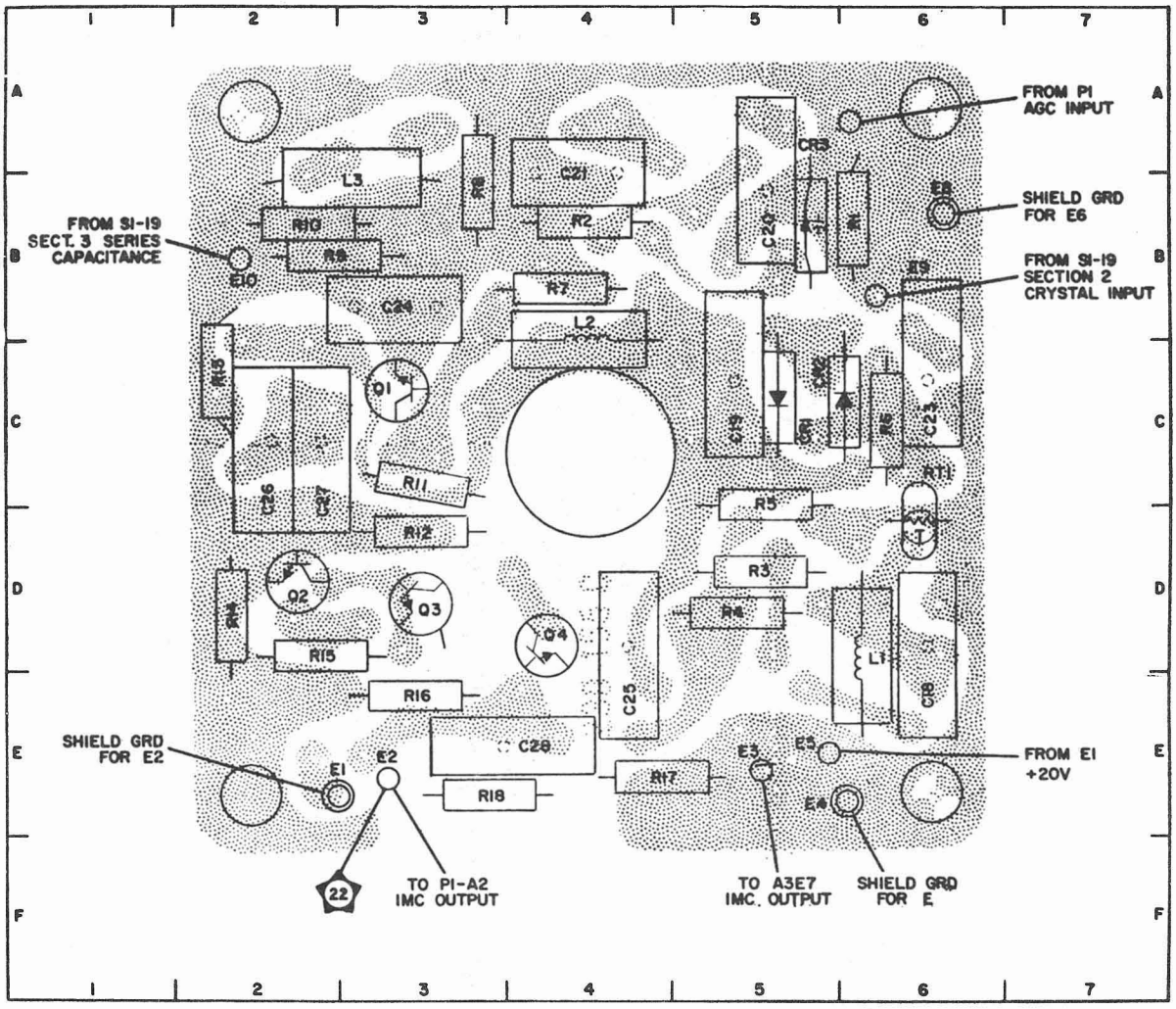

PARTS LOCATION INDEX

REF DESIG	LOC	REF DESIG	LOC	REF DESIG	LOC	REF DESIG	LOC
C18	6D	CR3	5B	L3	3A	R9	3B
C19	5C	E1	2E	Q1	3C	R10	2B
C20	5B	E2	3E	Q2	2D	R11	3C
C21	4B	E3	5E	Q3	3D	R12	3D
C23	6C	E4	6E	Q4	4D	R13	2C
C24	3B	E5	5E	R1	6B	R14	2D
C25	4D	E6	6A	R2	4B	R15	2D
C26	2C	E8	6B	R3	5D	R16	3E
C27	2C	E9	6B	R4	5D	R17	4E
C28	4E	E10	2B	R6	6C	R18	3E
CR1	5C	L1	6D	R7	4B	RT1	6D
CR2	6C	L2	4B	R8	3B		

NOTE:
REF. DESIG. PREFIX A2A6A1.

Figure 5-67. MC Oscillator (Foil Side Up), Component Location

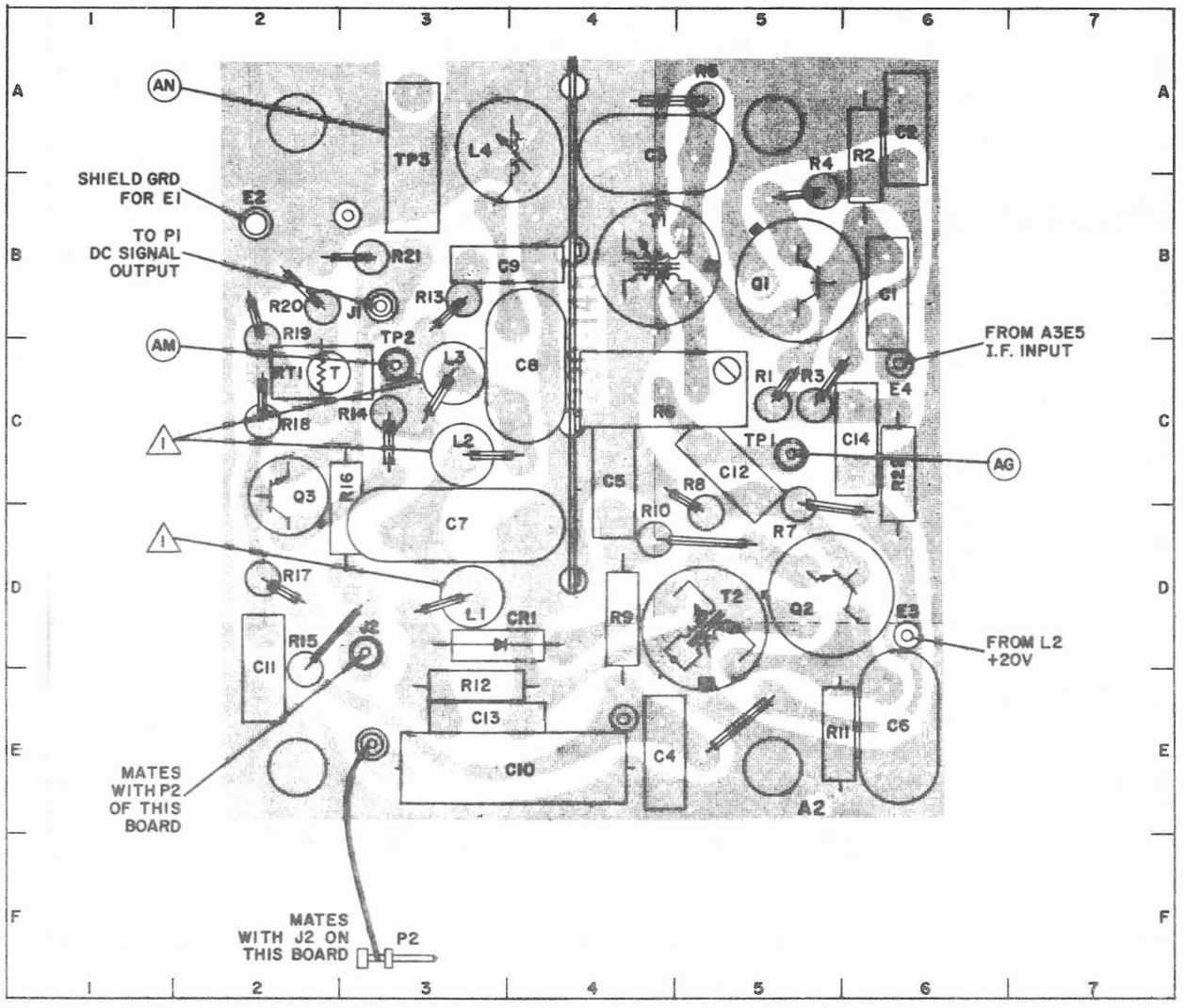

PARTS LOCATION INDEX

REF DESIG	LOC	REF DESIG	LOC	REF DESIG	LOC	REF DESIG	LOC
C1	6B	CR1	4D	R1	5C	R15	2D
C2	6A	E2	2B	R2	6A	R16	3C
C3	4A	E3	6D	R3	5C	R17	2D
C4	4E	E4	6C	R4	5B	R18	2C
C5	4C	J1	3B	R5	5A	R19	2B
C6	6E	J2	3D	R6	4C	R20	2B
C7	3D	L1	3D	R7	5C	R21	3B
C8	4C	L2	3C	R8	5D	R22	6C
C9	3B	L3	3C	R9	4D	RT1	2C
C10	4E	L4	3A	R10	4D	T1	4B
C11	2D	P2	3F	R11	5E	T2	5D
C12	5C	Q1	5B	R12	3E	TP1	5C
C13	3E	Q2	5D	R13	3B	TP2	3C
C14	6C	Q3	2C	R14	3C	TP3	3A

NOTES:
1. REF. DESIG. PREFIX A2A6A1.
2. (1) ~~~ VERTICALLY MOUNTED INDUCTORS

Figure 5-68. MC Oscillator AGC (Foil Side Up), Component and Test Point Location

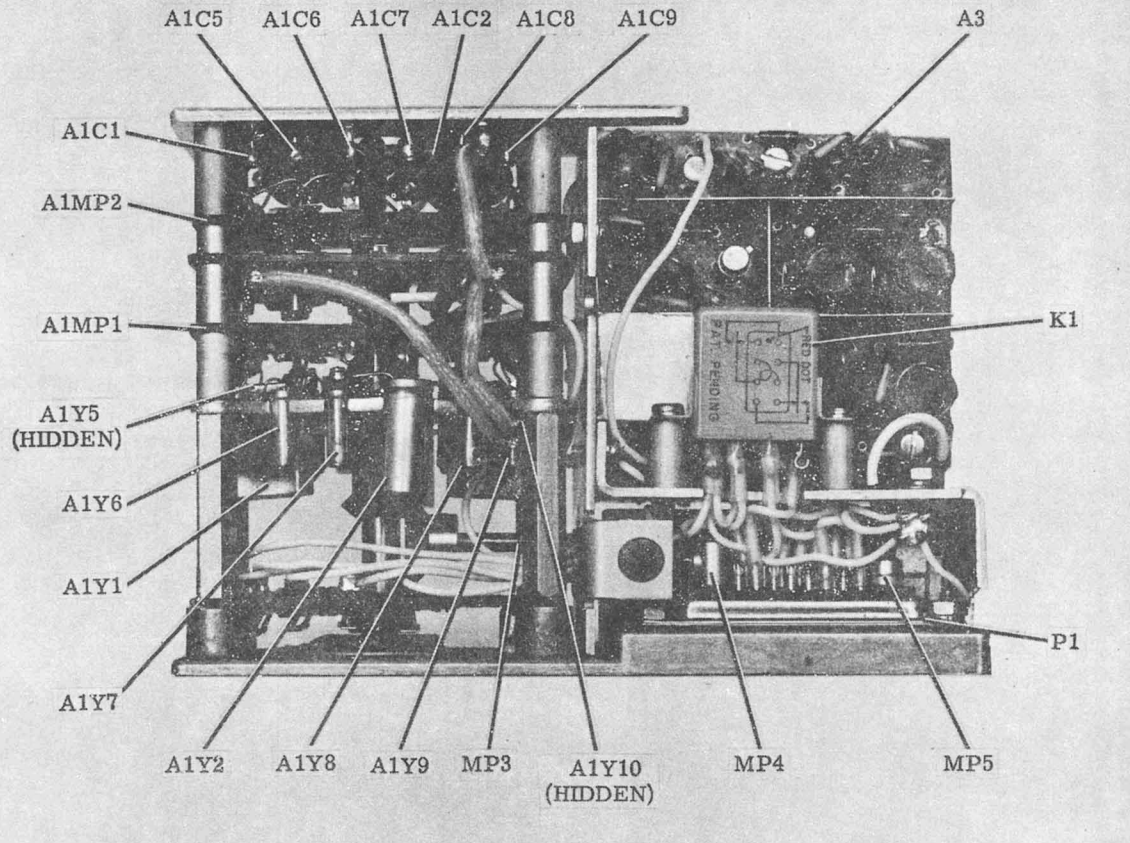

REF. DESIG. PREFIX A2A6A1

Figure 5-69. 1 MC Synthesizer Electronic Subassembly, Rear View, Component Location

PARTS LOCATION INDEX

REF DESIG	LOC	REF DESIG	LOC	REF DESIG	LOC	REF DESIG	LOC
C1	5B	CR1	5B	Q5	5F	R19	2E
C2	5C	CR2	5B	Q6	3F	R20	3E
C3	6D	CR3	5C	R1	2B	R21	3D
C4	4C	CR4	2C	R2	5B	R22	2D
C5	4C	CR5	2D	R3	4B	R23	3F
C6	4D	E1	6B	R4	4B	R24	3F
C7	4B	E2	6B	R5	5D	R25	2F
C8	3C	E3	2B	R6	5C	R26	5F
C9	2D	E5	6E	R7	3C	R27	5F
C10	2B	E6	3F	R8	4D	R28	6F
C11	2E	E7	6F	R9	4B	R29	5F
C12	2F	E9	6F	R10	3B	R30	4F
C13	2F	L1	2F	R11	4B	R31	2F
C14	4F	L2	6C	R12	3B	R32	6E
C15	5E	L3	3D	R13	2B	R33	6C
C16	4E	L4	5E	R14	3C	T1	6E
C17	5E	Q1	5C	R15	2C	TP1	5E
C18	6F	Q2	3C	R16	2C		
C19	6F	Q3	2C	R17	2C		
C20	5F	Q4	3E	R18	3E		

NOTES:

1. REF. DESIG. PREFIX A2A6A1.
2. (1) — VERTICALLY MOUNTED INDUCTOR.
3. (2) — VERTICALLY MOUNTED DIODE ANODE TO BOARD.

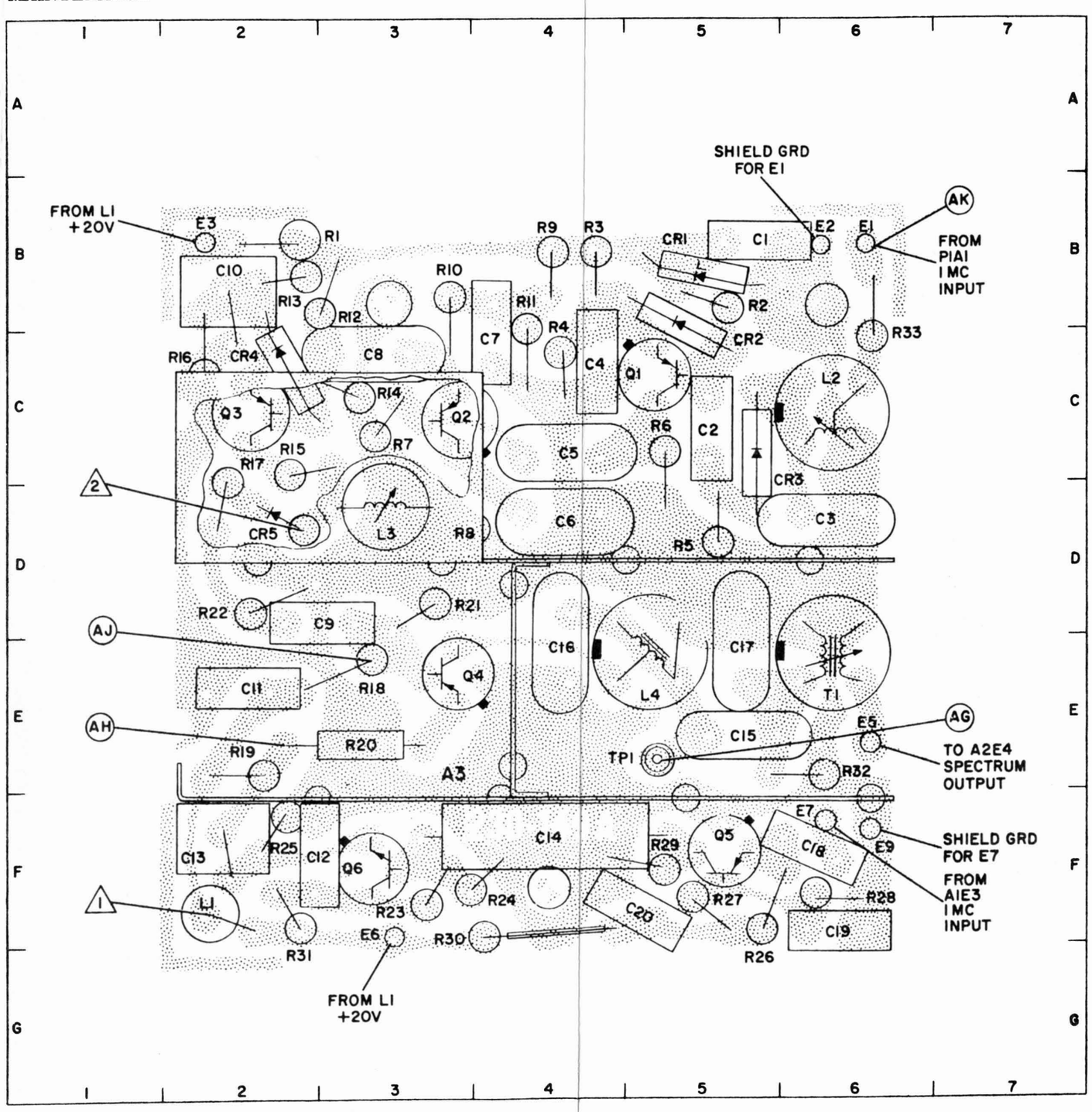

Figure 5-70. Spectrum Generator/Mixer (Foil Side Up), Component and Test Point Location

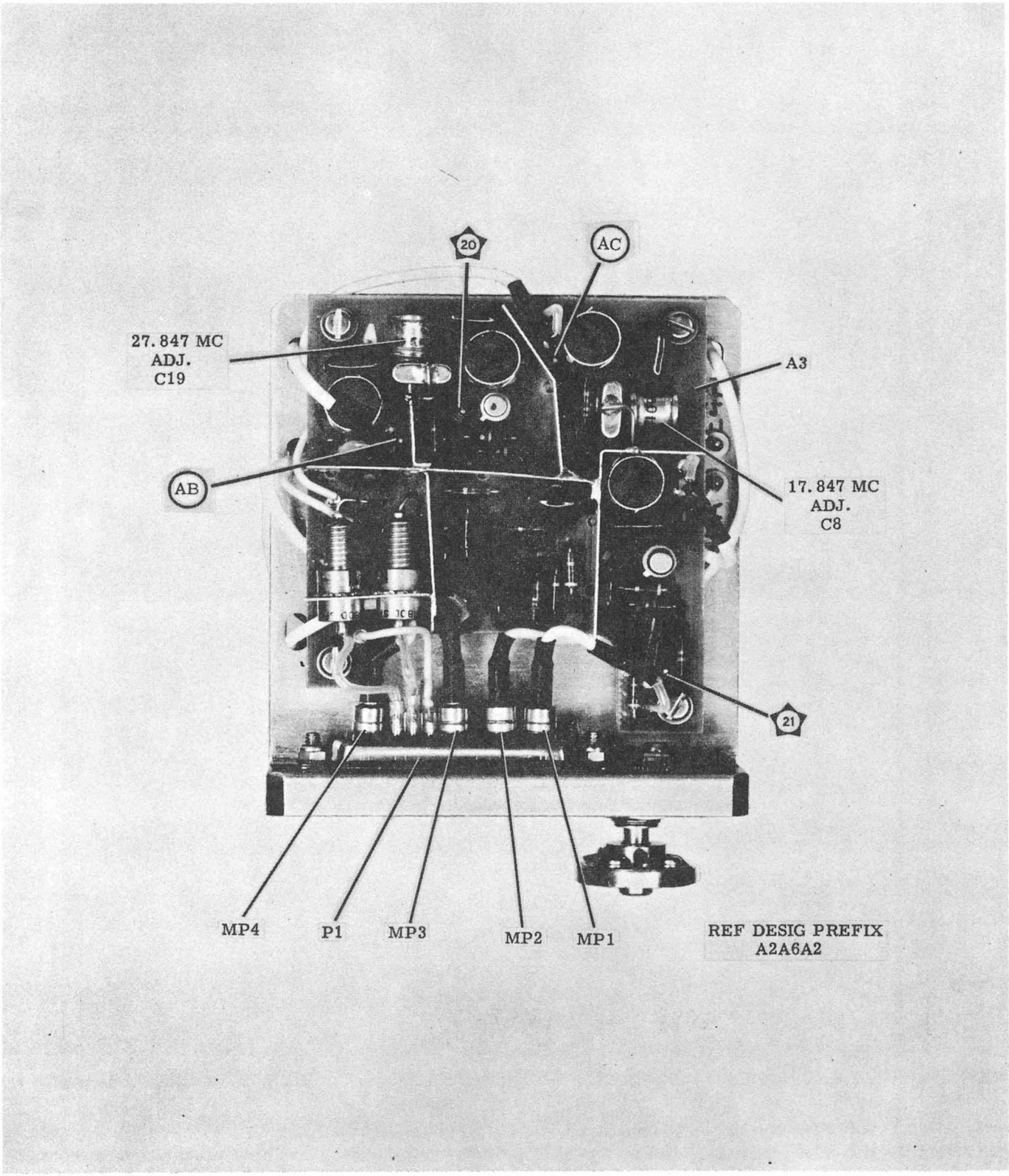

Figure 5-71. 100 KC Synthesizer Electronic Subassembly, Front View, Component Location

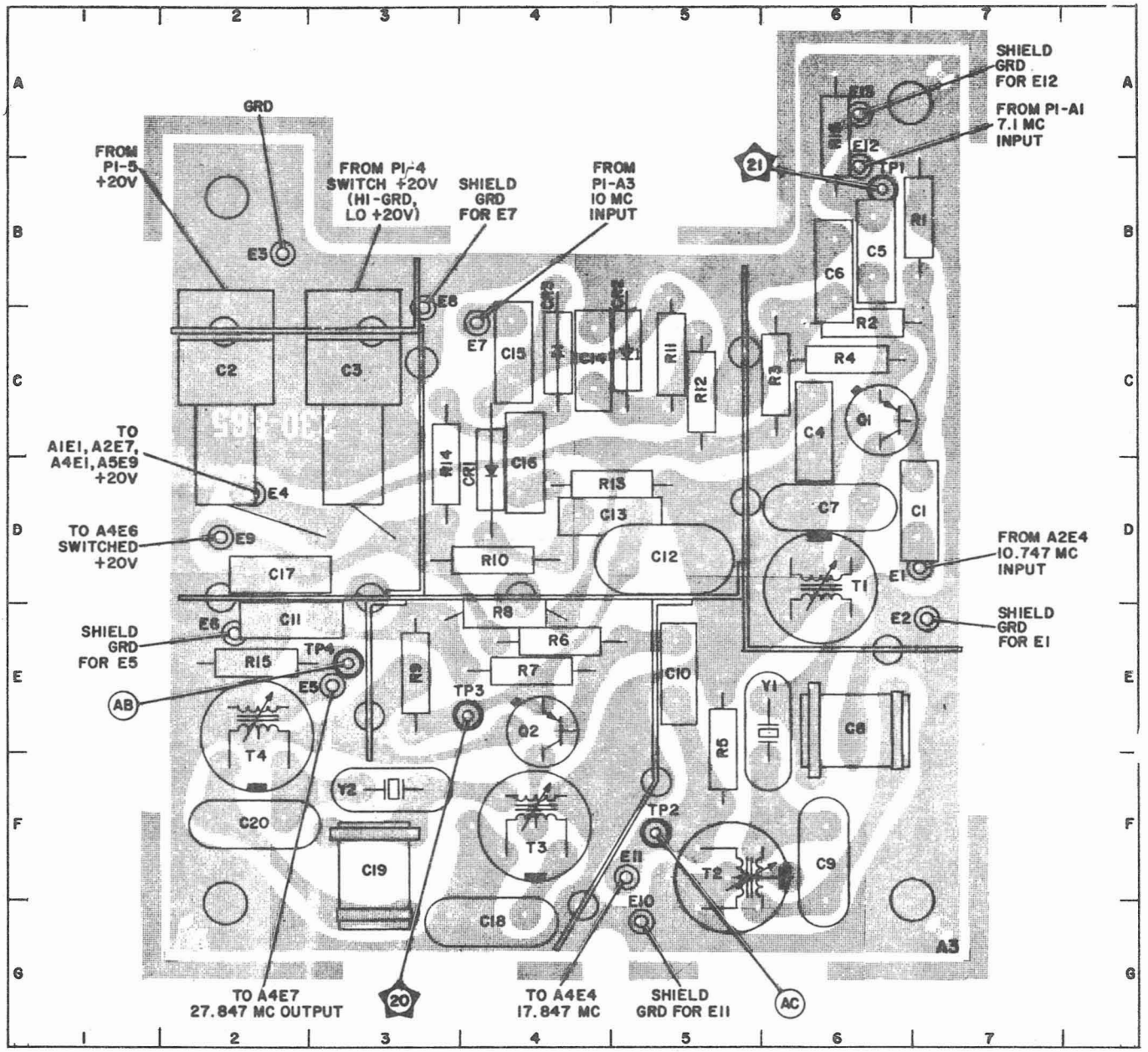

PARTS LOCATION INDEX

REF DESIG	LOC	REF DESIG	LOC	REF DESIG	LOC	REF DESIG	LOC	REF DESIG	LOC	REF DESIG	LOC
C1	7D	C12	5D	CR3	4C	E11	5F	R7	4E	T2	5F
C2	2C	C13	4D	E1	7D	E12	6B	R8	4E	T3	4F
C3	3C	C14	4C	E2	7E	E13	6A	R9	3E	T4	2E
C4	6C	C15	4C	E3	2B	Q1	6C	R10	4D	TP1	6B
C5	6B	C16	4D	E4	2D	Q2	4E	R11	5C	TP2	5F
C6	6B	C17	2D	E5	3E	R1	7B	R12	5C	TP3	4E
C7	6D	C18	4G	E6	2E	R2	6C	R13	4D	TP4	3E
C8	6E	C19	3F	E7	4C	R3	6C	R14	3D	Y1	6E
C9	6F	C20	2F	E8	3B	R4	6C	R15	2E	Y2	3F
C10	5E	CR1	4D	E9	2D	R5	5E	R16	6A		
C11	2E	CR2	5C	E10	5G	R6	4E	T1	6D		

NOTE:
REF. DESIG. PREFIX A2A6A2.

Figure 5-72. 17.847/27.847 MC Mixer (Foil Side Up), Component and Test Point Location

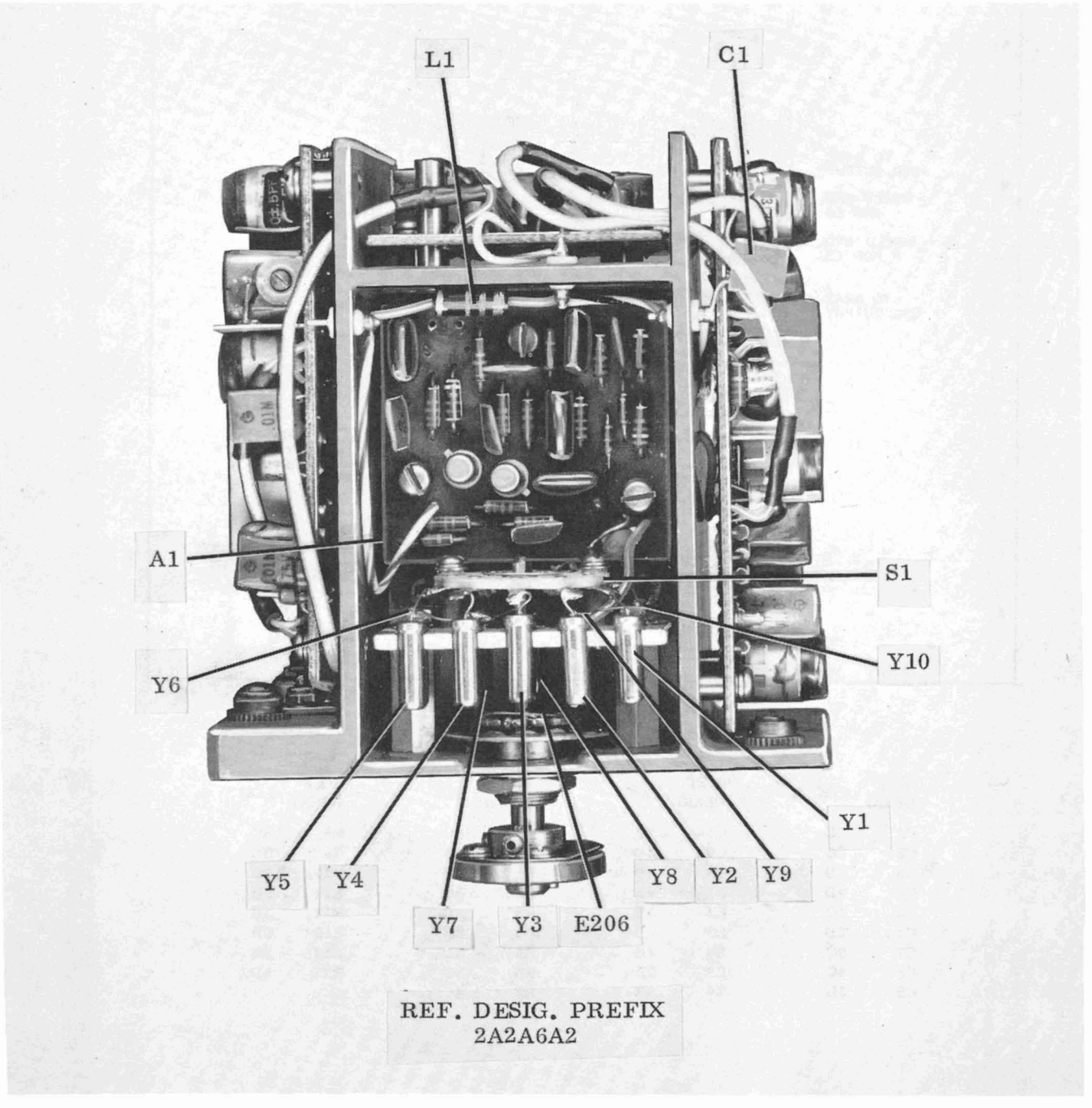

Figure 5-73. 100 KC Synthesizer Electronic Subassembly, Right Side, Component Location

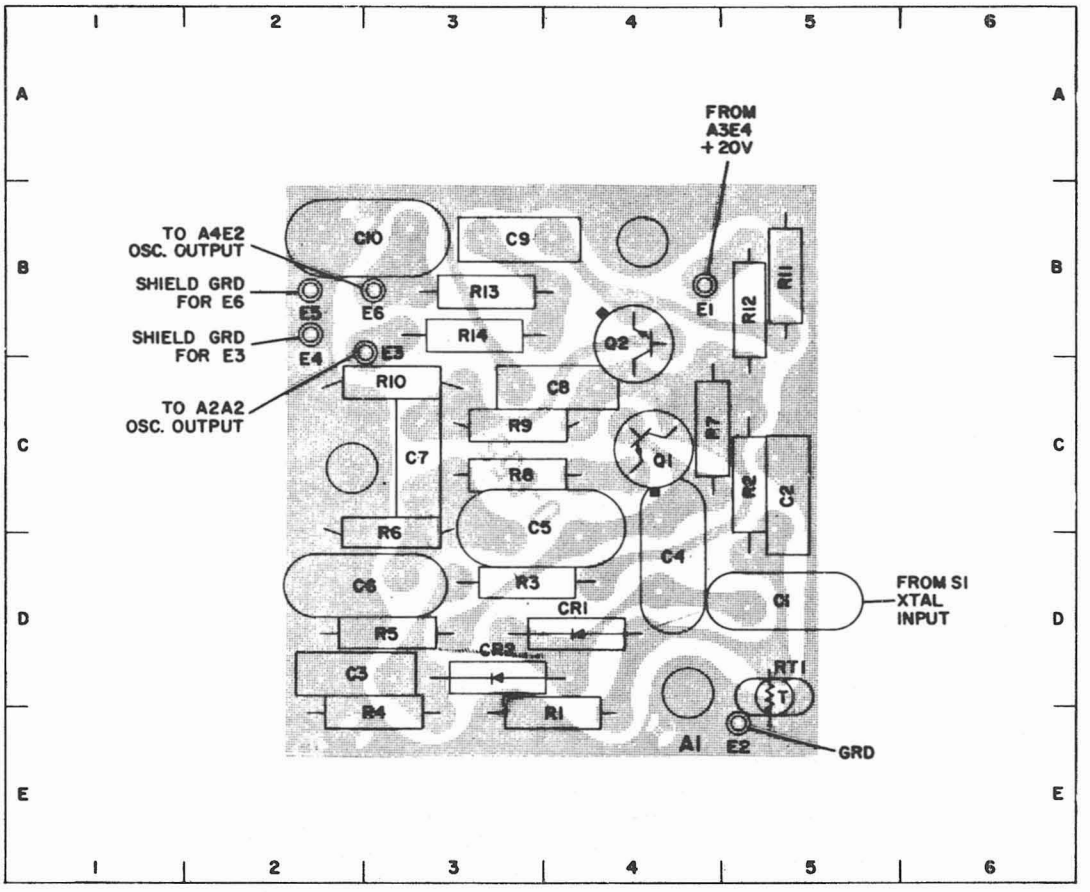

PARTS LOCATION INDEX

REF DESIG	LOC	REF DESIG	LOC	REF DESIG	LOC	REF DESIG	LOC
C1	5D	C10	3B	Q1	4C	R8	3C
C2	5C	CR1	4D	Q2	4B	R9	3C
C3	2D	CR2	3D	R1	4E	R10	3C
C4	4D	E1	4B	R2	5C	R11	5B
C5	3C	E2	5E	R3	3D	R12	5B
C6	2D	E3	3B	R4	3E	R13	3B
C7	3C	E4	2B	R5	3D	R14	3B
C8	4C	E5	2B	R6	3C	RT1	5D
C9	3B	E6	3B	R7	4C		

NOTE:
REF. DESIG. PREFIX A2A6A2.

Figure 5-74. 4.553 MC to 5.453 MC Oscillator (Foil Side Up), Component Location

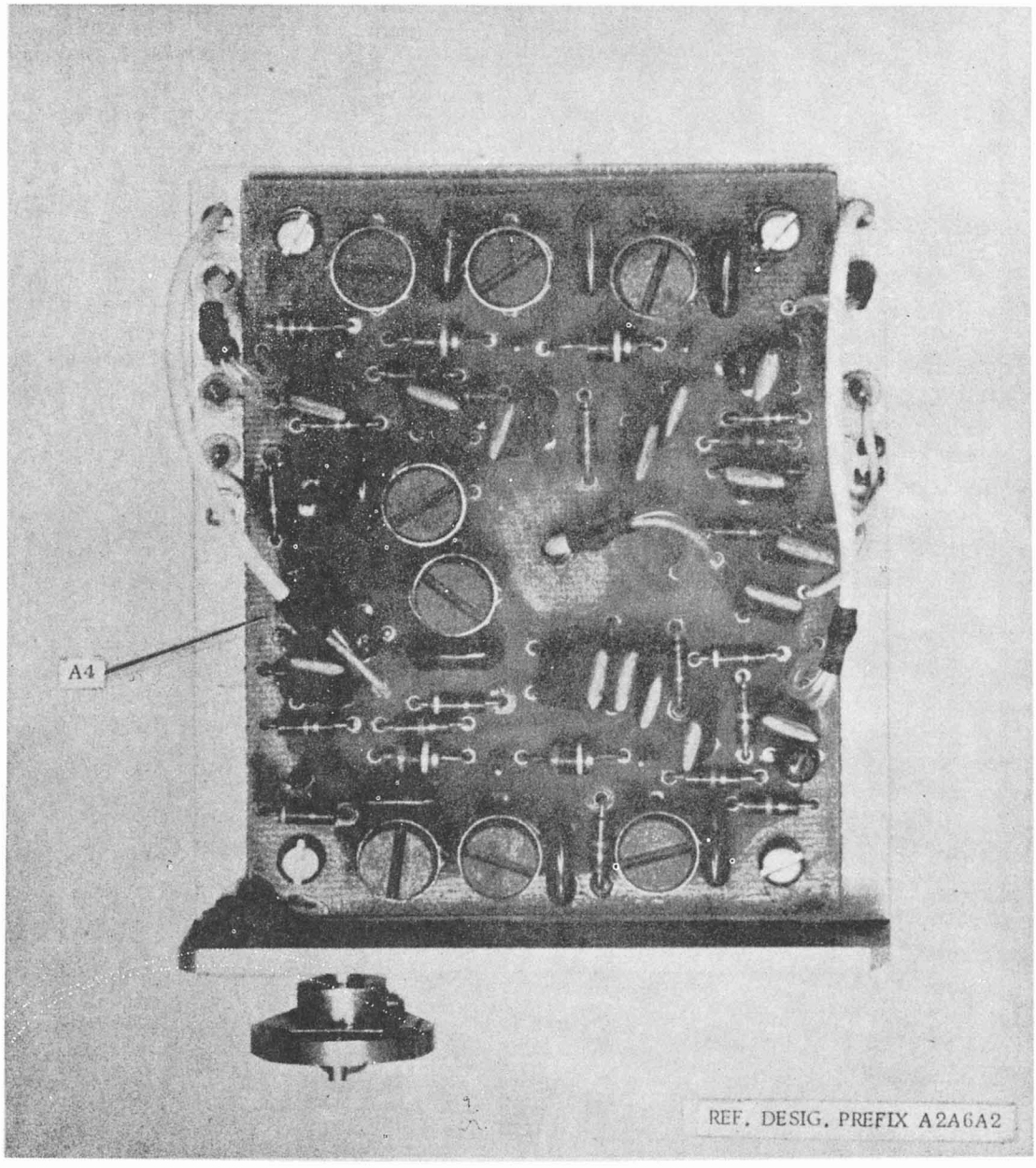

Figure 5-75. 100 KC Synthesizer Electronic Subassembly, Rear View, Component Location

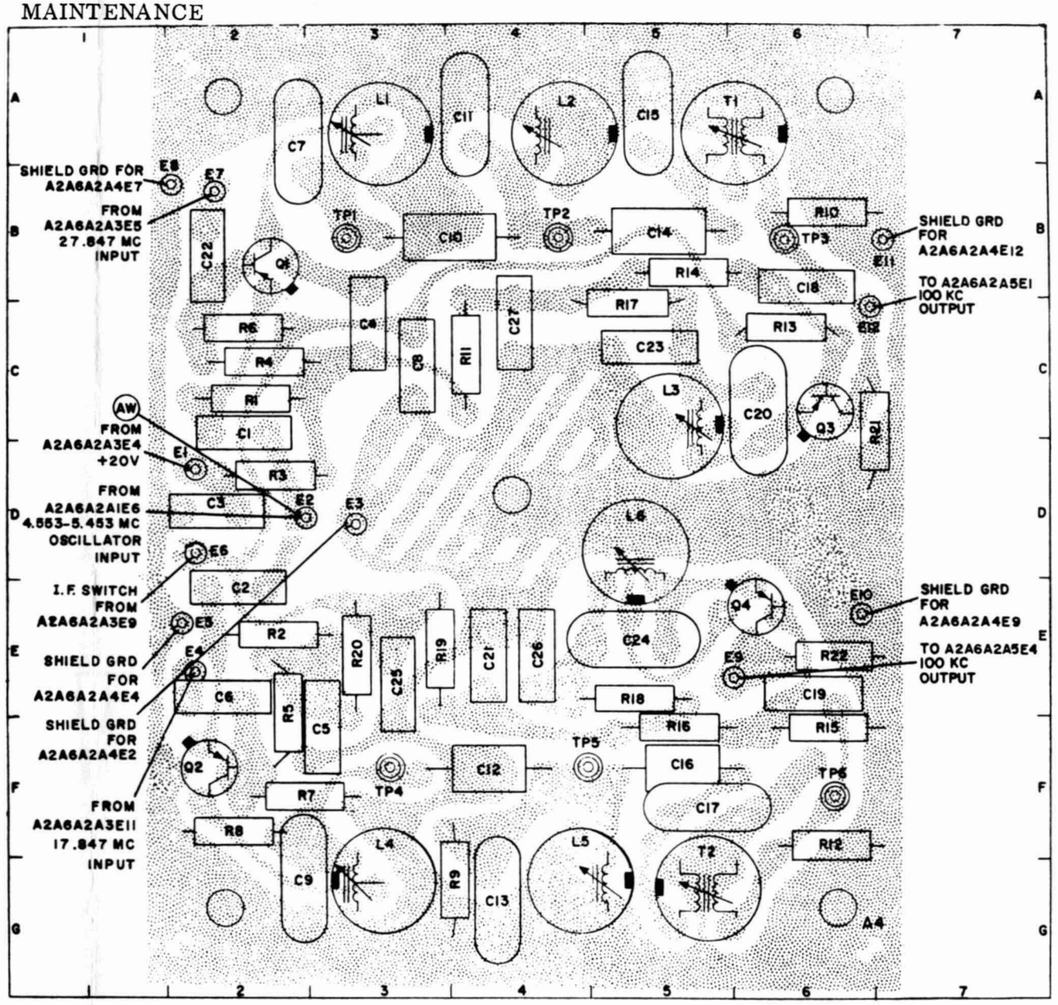

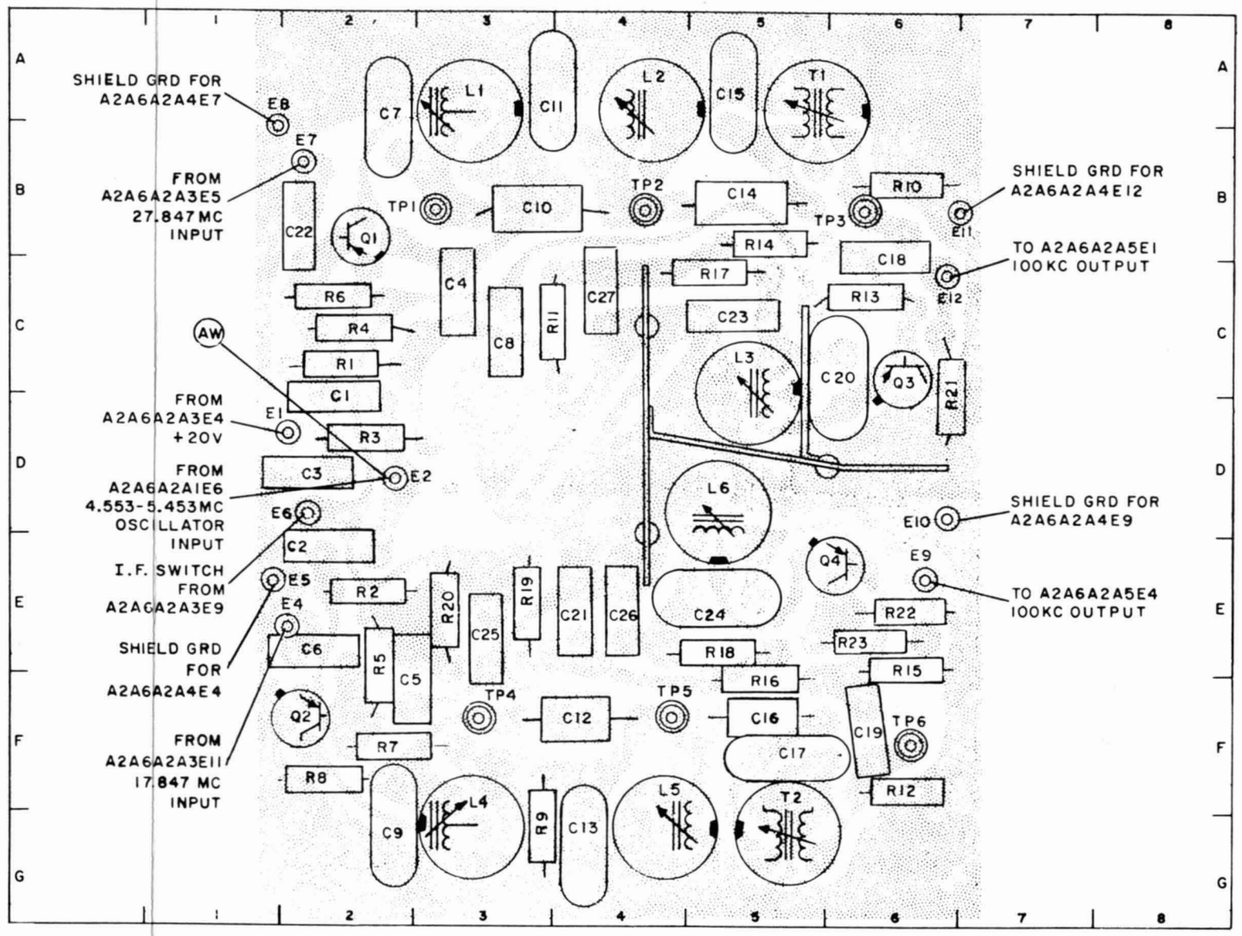

PARTS LOCATION INDEX

REF. DESIG.	LOC.	REF. DESIG.	LOC.	REF. DESIG.	LOC.	REF. DESIG.	LOC.	REF. DESIG.	LOC.	REF. DESIG.	LOC.	REF. DESIG.	LOC.	REF. DESIG.	LOC.
C1	2C	C11	4A	C21	4E	E4	2E	L2	4A	R2	2E	R12	6F	R22	6E
C2	2E	C12	4F	C22	2B	E5	2E	L3	5C	R3	2D	R13	6C	R23	6E
C3	2D	C13	4G	C23	5C	E6	2D	L4	3G	R4	2C	R14	5B	T1	6A
C4	3C	C14	5B	C24	5E	E7	2B	L5	4G	R5	2E	R15	6F OR 6E	T2	5G
C5	3F	C15	5A	C25	3E	E8	2B	L6	5D	R6	2C	R16	5F OR 5E	TP1	3B
C6	2E	C16	5F	C26	4E	E9	6E	Q1	2B	R7	2F	R17	5C	TP2	4B
C7	2A	C17	5F	C27	4C	E10	6E	Q2	2F	R8	2F	R18	5E	TP3	6B
C8	3C	C18	6B	E1	2D	E11	7B	Q3	6C	R9	4G	R19	3E	TP4	3F
C9	2F	C19	6E OR 6F	E2	2D	E12	6C	Q4	6E	R10	6B	R20	3E	TP5	4F
C10	4B	C20	6C	E3	3D	L1	3A	R1	2C	R11	4C	R21	7C	TP6	6F

NOTE:
1. COMPONENT REF. DESIG. PREFIX A2A6A2A4.
2. VARIATIONS OF HI-BAND/LO-BAND MIXER/AMPLIFIER EXIST DUE TO DESIGN CHANGES. CURRENT MODELS AND EARLIER MODELS ARE INTERCHANGEABLE ON UNIT BASIS. MAJOR CHANGES FOR CURRENT MODEL INCLUDE FOIL PATTERN ALTERATIONS, ADDITION OF RESISTOR R23 AND DELETION OF E3.

Figure 5-76. Hi-band/Lo-band Mixer Amplifier (Foil Side Up), Component and Test Point Location

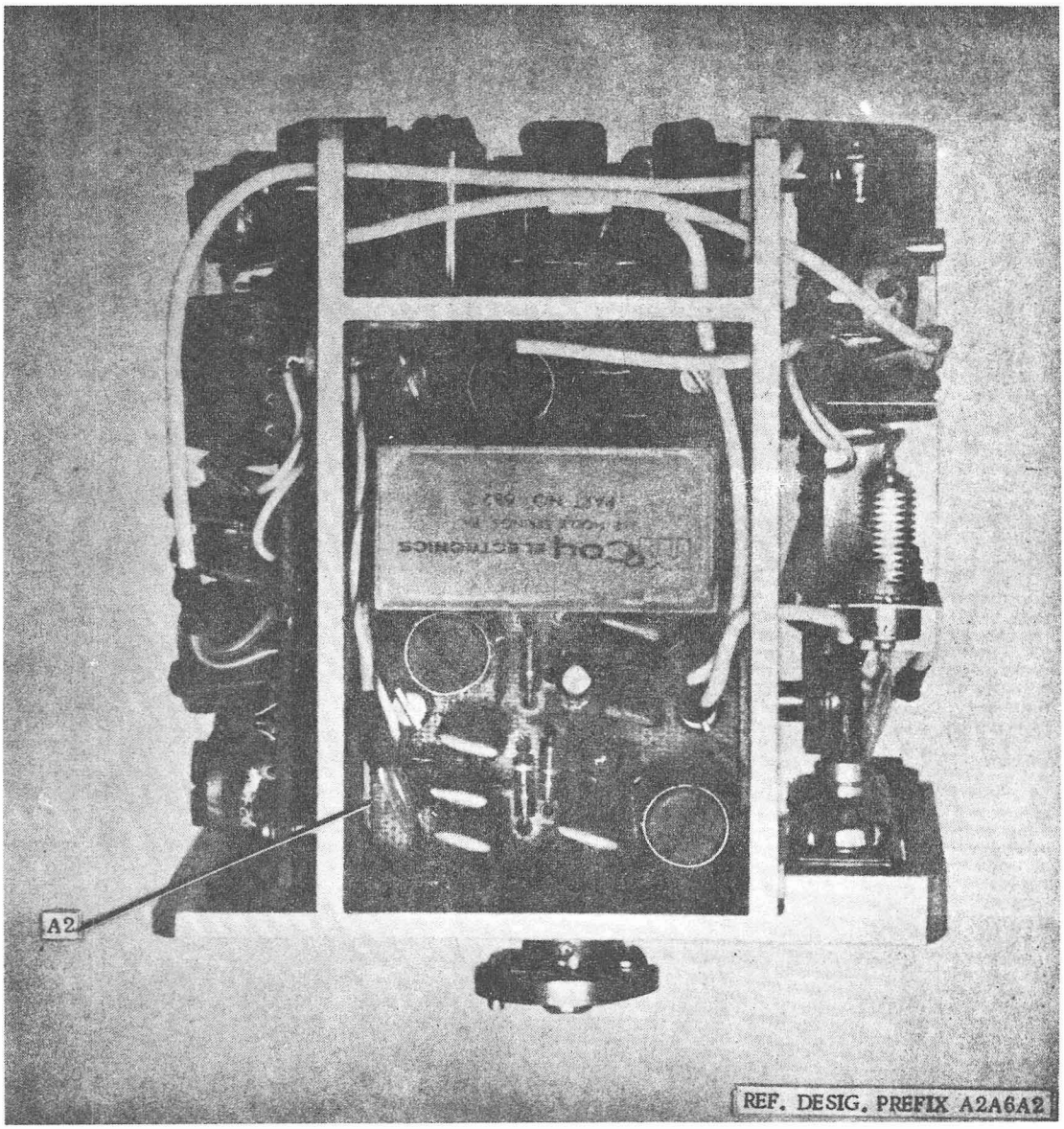

Figure 5-77. 100 KC Synthesizer Electronic Subassembly, Left Side, Component Location

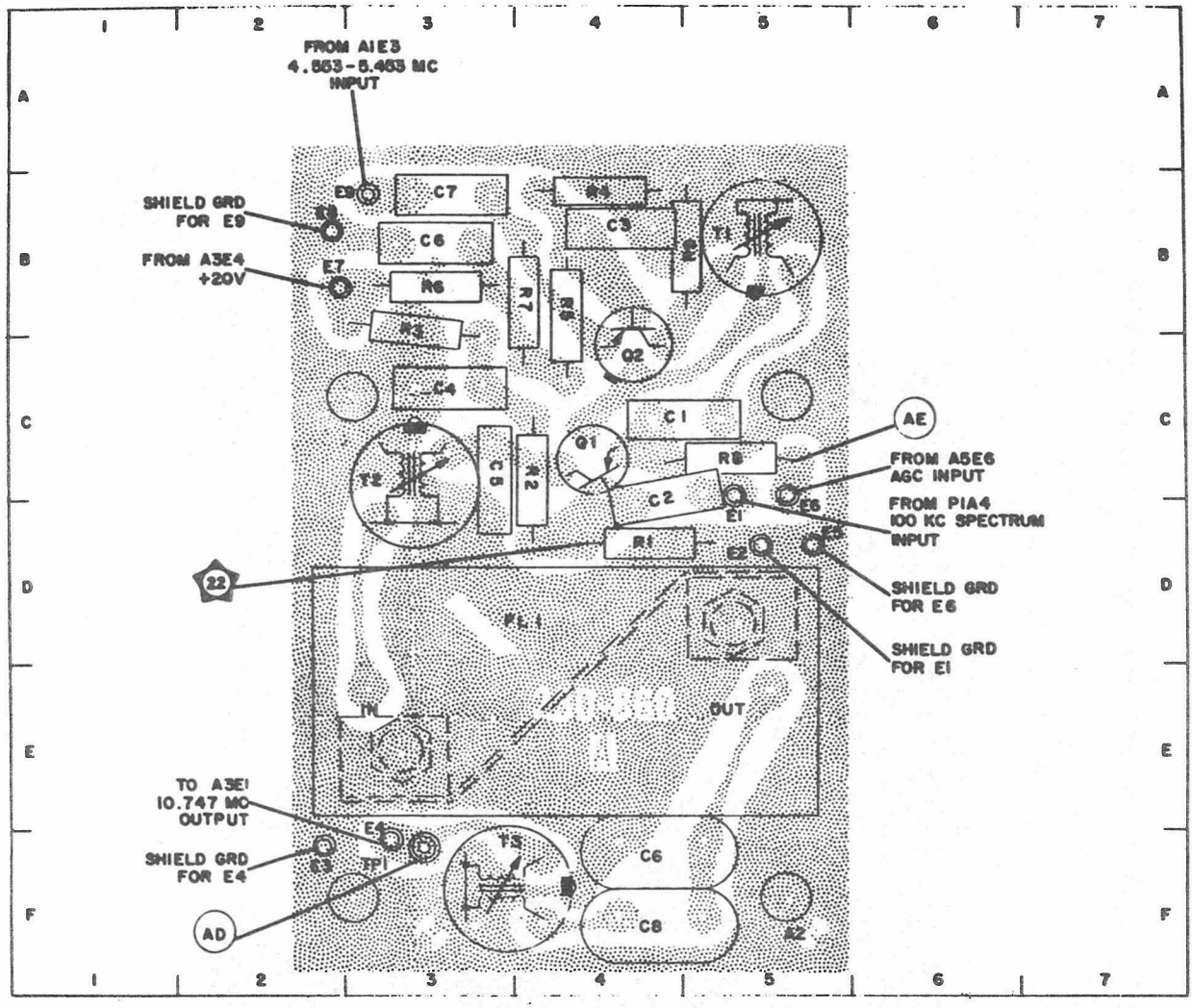

NOTE:
REF. DESIG. PREFIX A2A6A2.

PARTS LOCATION INDEX

REF DESIG	LOC	REF DESIG	LOC	REF DESIG	LOC	REF DESIG	LOC
C1	5C	E1	5C	FL1	4D	R7	4B
C2	5C	E2	5D	Q1	4C	R8	5C
C3	4B	E3	3E	Q2	4B	R9	5B
C4	3B	E4	3E	R1	4C	T1	5B
C5	4C	E5	6C	R2	4C	T2	3C
C6	3B	E6	5C	R3	3B	T3	4F
C7	3A	E7	3B	R4	4A	TP1	3E
C8	5F	E8	3B	R5	4B		
C9	5E	E9	3A	R6	3B		

Figure 5-78. 10.747 MC Mixer (Foil Side Up), Component and Test Point Location

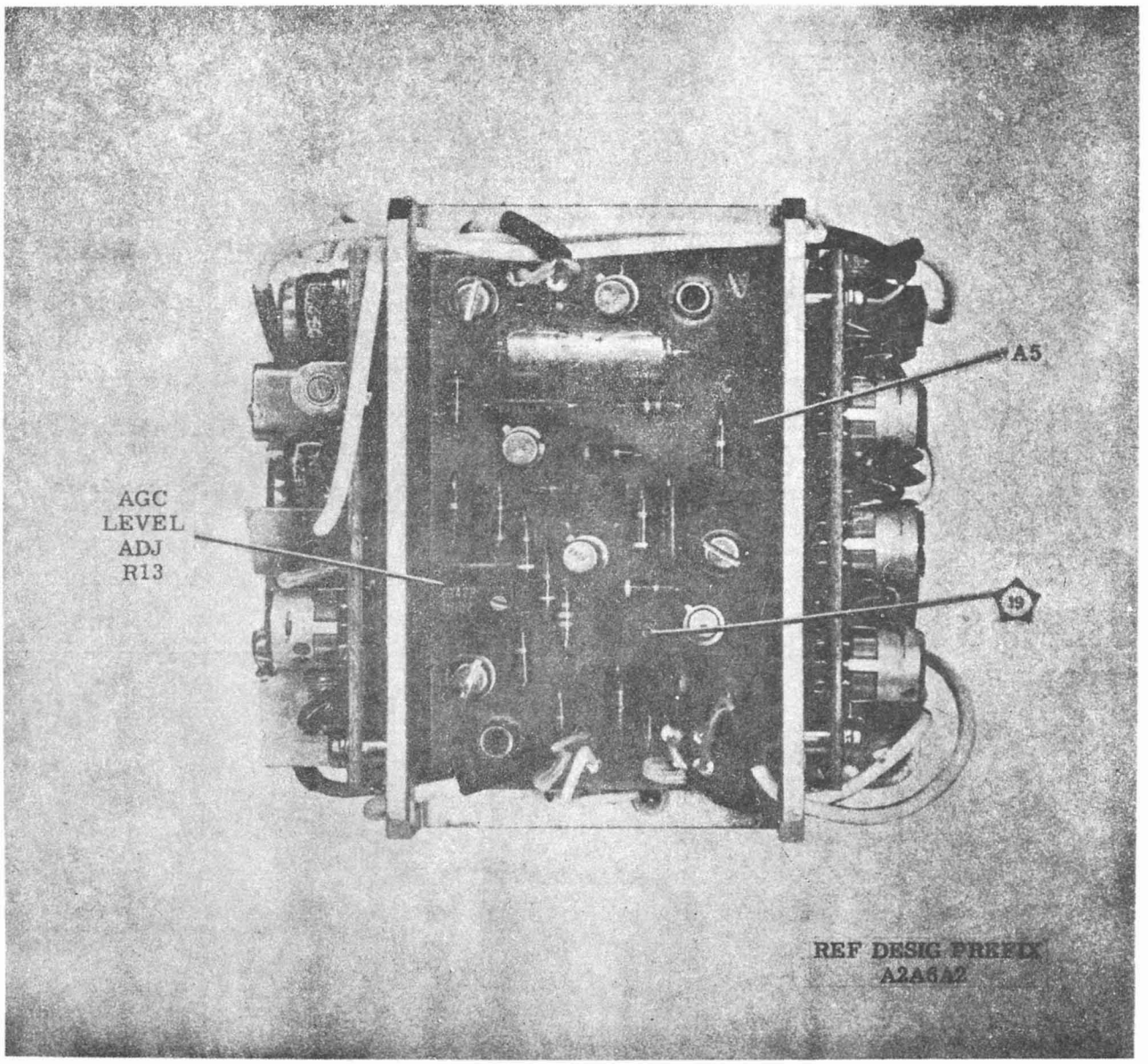

Figure 5-79. 100 KC Synthesizer Electronic Subassembly, Top View, Component Location

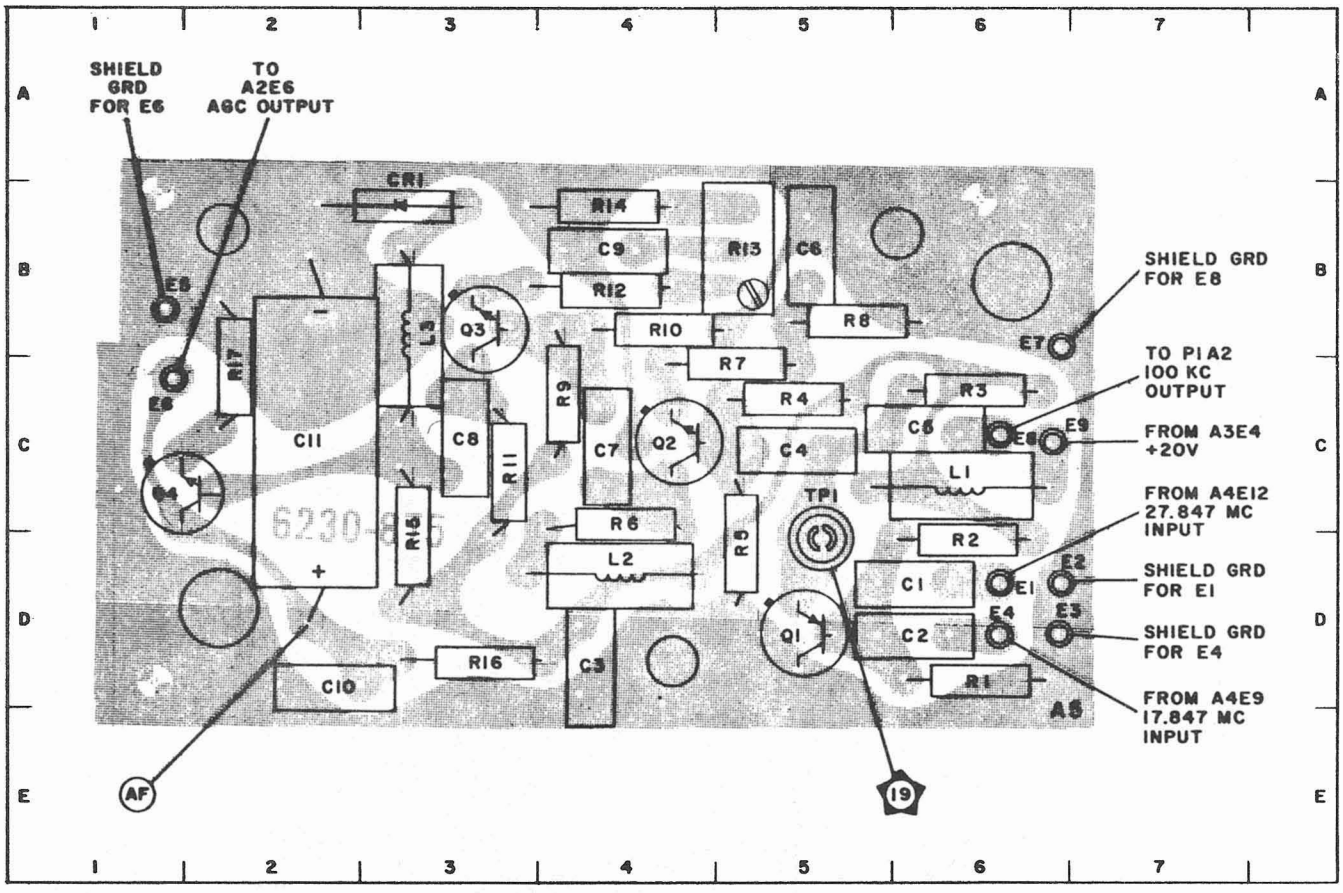

NOTE:
REF. DESIG. PREFIX A2A6A2.

PARTS LOCATION INDEX

REF DESIG	LOC	REF DESIG	LOC	REF DESIG	LOC	REF DESIG	LOC
C1	D6	E1	D6	Q1	D5	R9	C4
C2	D6	E2	D6	Q2	C4	R10	B4
C3	D4	E3	D6	Q3	B3	R11	C3
C4	C5	E4	D6	Q4	C1	R12	B4
C5	C6	E5	B1	R1	D6	R13	B5
C6	B5	E6	C1	R2	D6	R14	B4
C7	C4	E7	B6	R3	C6	R15	D3
C8	C3	E8	C6	R4	C5	R16	D3
C9	B4	E9	C6	R5	D5	R17	C2
C10	D2	L1	C6	R6	C4	TP1	D5
C11	C2	L2	D4	R7	C5		
CR1	B3	L3	B3	R8	B5		

Figure 5-80. 10.747 MC Mixer AGC (Foil Side Up), Component and Test Point Location

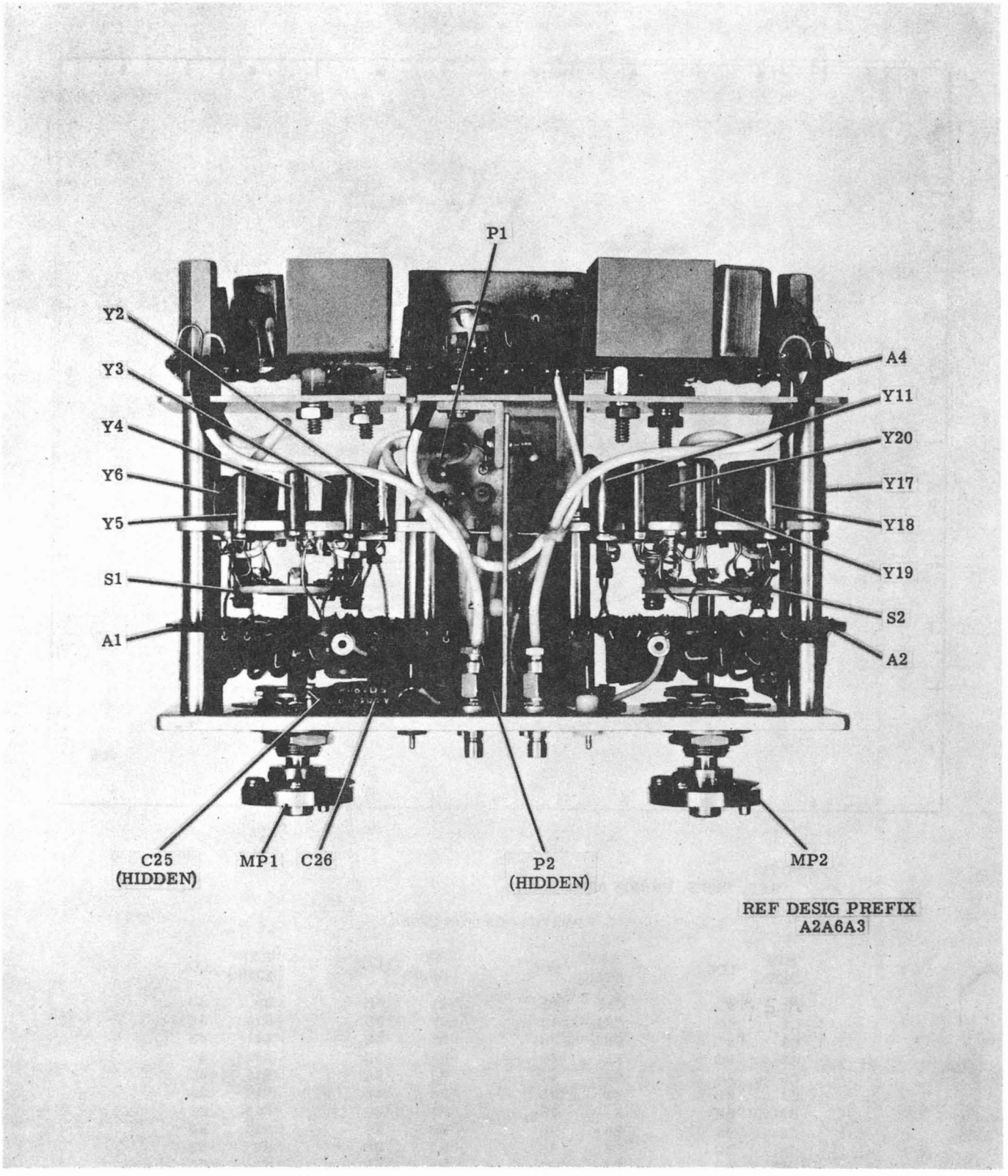

Figure 5-81. 1 and 10 KC Synthesizer Electronic Subassembly, Front View, Component Location

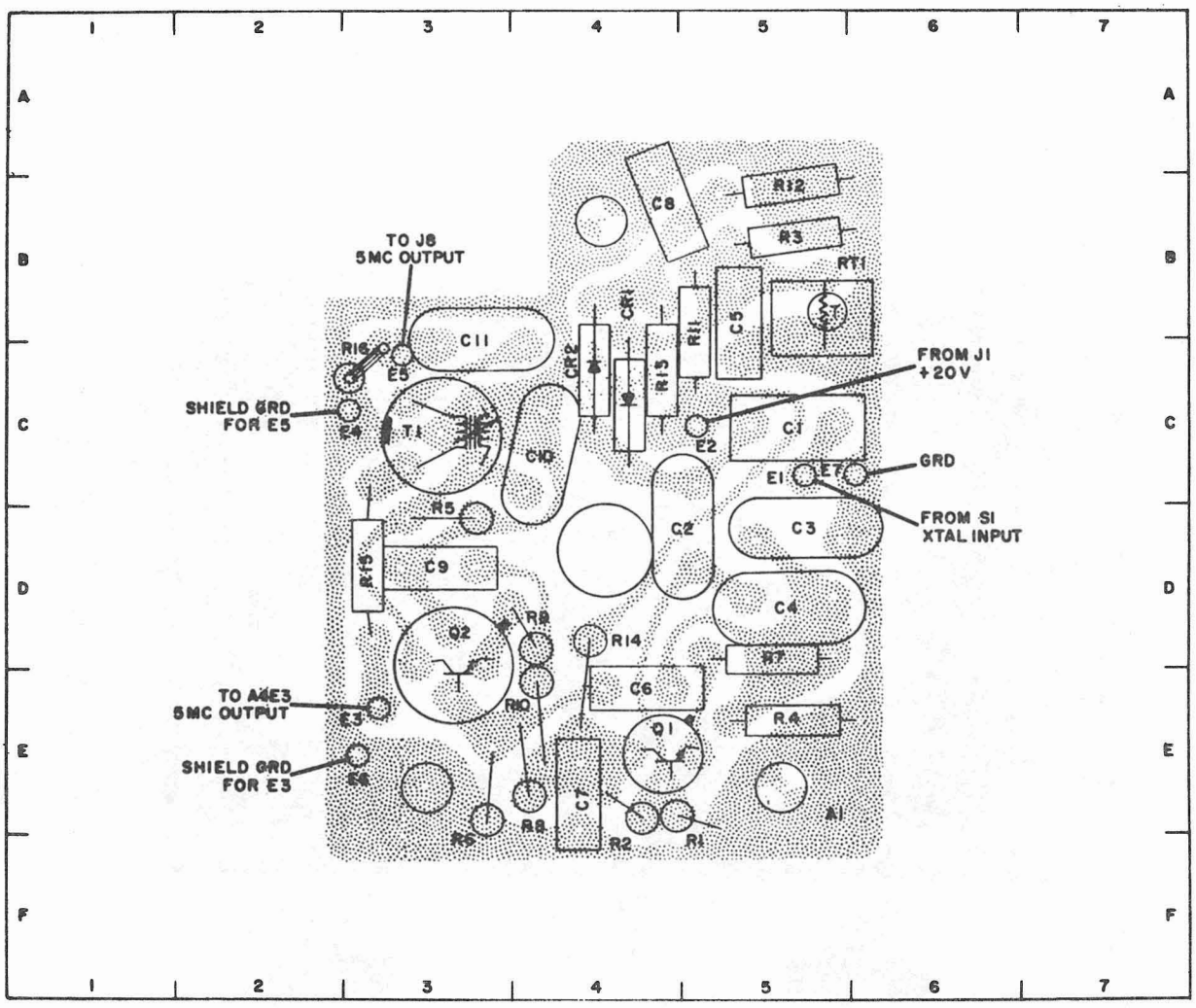

NOTE:
REF. DESIG. PREFIX A2A6A3.

PARTS LOCATION INDEX

REF DESIG	LOC	REF DESIG	LOC	REF DESIG	LOC	REF DESIG	LOC
C1	5C	C11	3B	Q1	4E	R9	3D
C2	4C	CR1	4B	Q2	3D	R10	3D
C3	5C	CR2	3B	R1	4E	R11	4B
C4	5D	E1	5C	R2	4E	R12	5A
C5	4B	E2	4C	R3	5A	R13	4B
C6	4D	E3	2D	R4	5D	R14	3D
C7	3E	E4	2B	R5	3C	R15	2C
C8	4A	E5	2B	R6	3E	R16	2B
C9	3C	E6	2E	R7	5D	RT1	5B
C10	3C	E7	5C	R8	3E	T1	2C

Figure 5-82. 5.25 MC to 5.16 MC Oscillator (Foil Side Up), Component and Test Point Location

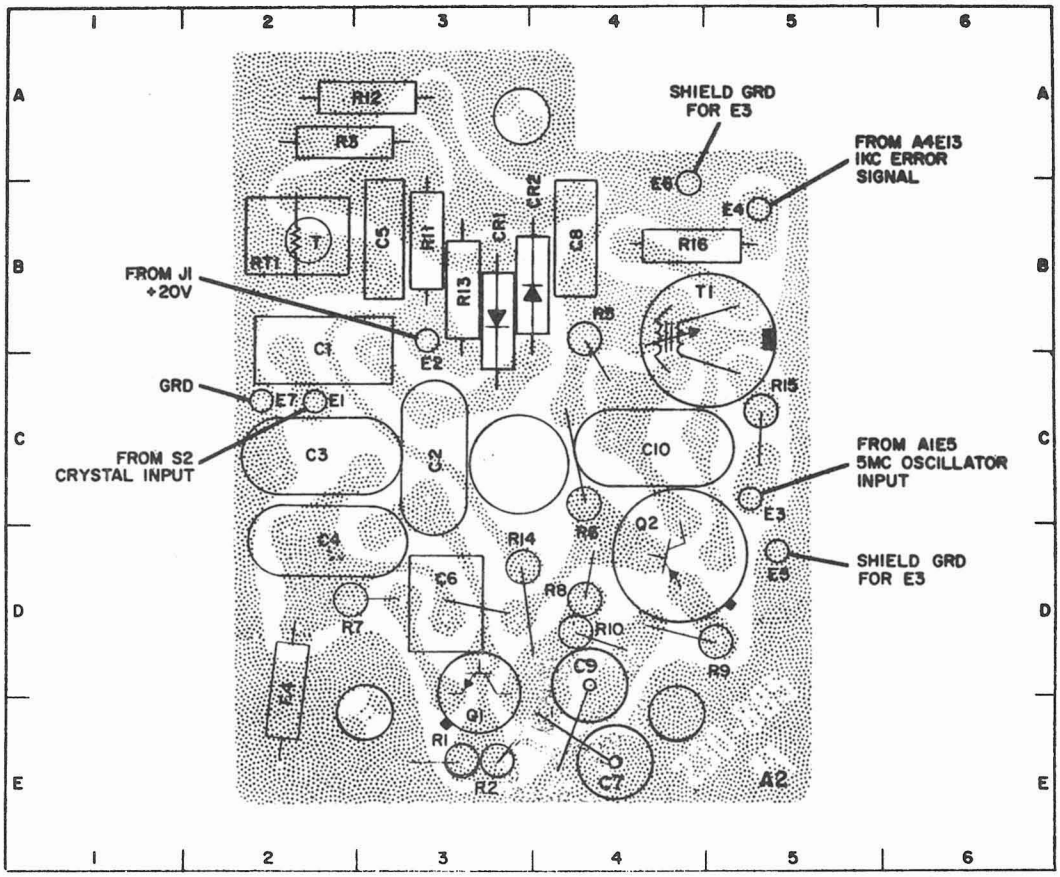

PARTS LOCATION INDEX

REF DESIG	LOC	REF DESIG	LOC	REF DESIG	LOC	REF DESIG	LOC
C1	2B	CR1	3B	R1	3E	R11	3B
C2	3C	CR2	4B	R2	3E	R12	3A
C3	2C	E1	2C	R3	3A	R13	3B
C4	2D	E2	3B	R4	2D	R14	4D
C5	3B	E3	5B	R5	4B	R15	4B
C6	3D	E4	5D	R6	4C	R16	5C
C7	4E	E5	4B	R7	2D	RT1	2B
C8	4B	E6	5D	R8	4D	T1	5B
C9	4D	Q1	3D	R9	5D		
C10	4C	Q2	4D	R10	4D		

NOTE:
REF. DESIG. PREFIX A2A6A3.

Figure 5-83. 1.850 MC to 1.859 MC Oscillator (Foil Side Up), Component and Test Point Location

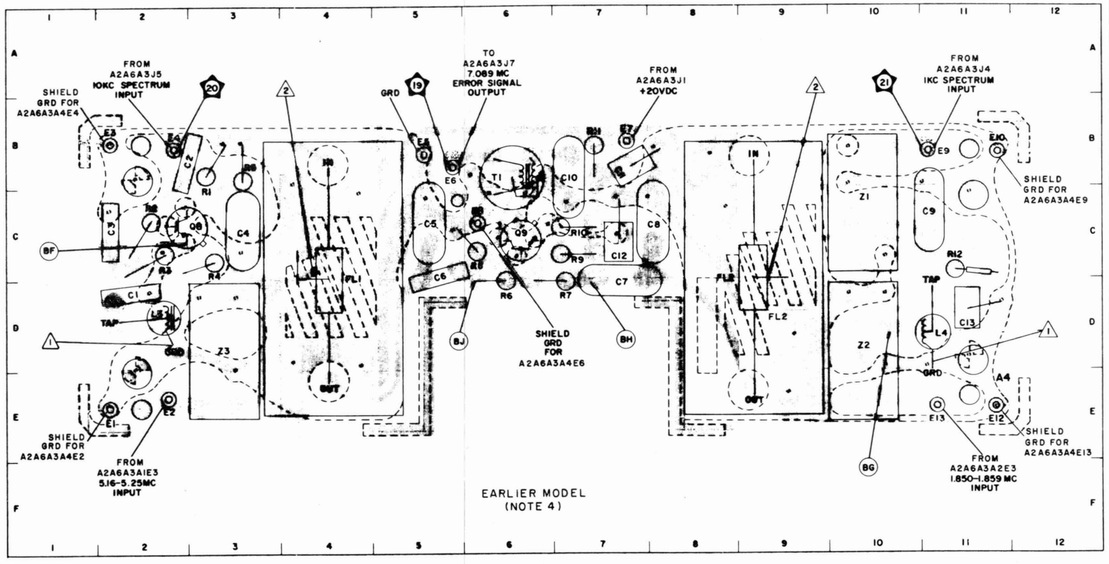

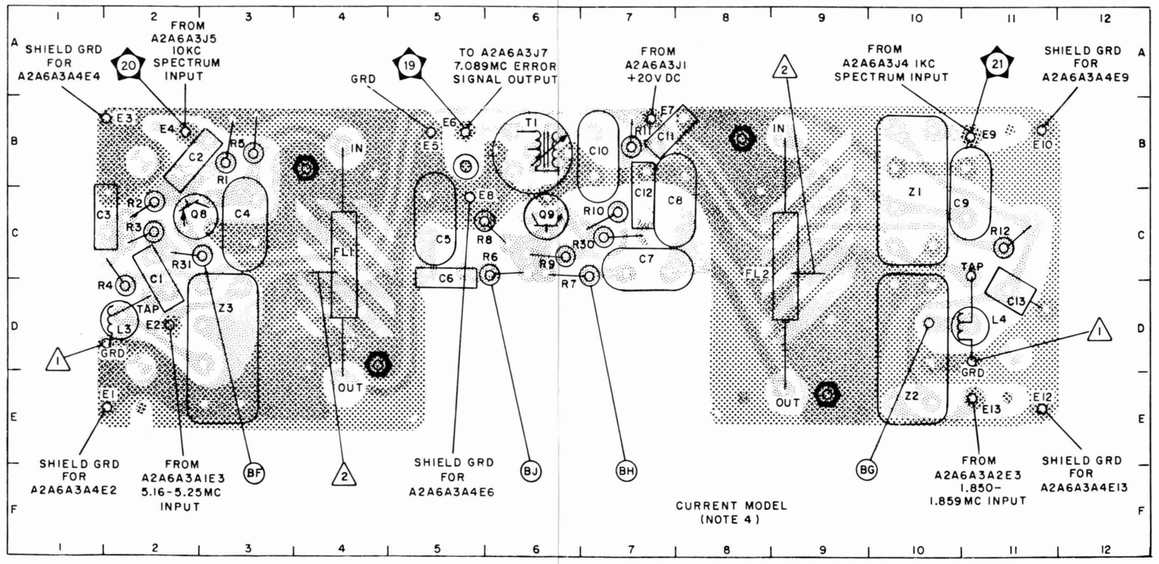

PARTS LOCATION INDEX

REF. DESIG.	LOC.	REF. DESIG.	LOC.	REF. DESIG.	LOC.	REF. DESIG.	LOC.	REF. DESIG.	LOC.	REF. DESIG.	LOC.
C1	2D	C9	11C	E4	2B	E13	10E	R2	2C	R10	7C
C2	2B	C10	7B	E5	5B	FL1	4C	R3	2C	R11	7B
C3	2C	C11	7B	E6	5B	FL2	9C	R4	3C	R12	11C
C4	3C	C12	7C	E7	7B	L3	2D	R5	3B	T1	6B
C5	5C	C13	11D	E8	6C	L4	11D	R6	6D	Z1	10C
C6	5C	E1	2E	E9	11B	Q8	3C	R7	7D	Z2	10D
C7	7D	E2	2E	E10	11B	Q9	6C	R8	6C	Z3	3D
C8	8C	E3	2B	E12	11E	R1	3B	R9	7C		

NOTES:

1. COMPONENT REF. DESIG. PREFIX A2A6A3A4.
2. (1) THIS CONNECTION IS ON OPPOSITE SIDE OF BOARD.
3. (2) GROUNDED SHIELD BETWEEN INPUT AND OUTPUT.
4. VARIATIONS OF 1 AND 10 KC ERROR MIXER EXIST DUE TO EQUIPMENT DESIGN CHANGES. CURRENT MODEL AND EARLIER MODEL ARE INTERCHANGEABLE ON UNIT BASIS BUT INDIVIDUAL COMPONENTS ARE NOT NECESSARILY INTERCHANGEABLE. MAJOR CHANGES FOR CURRENT MODEL INCLUDE FOIL PATTERN ALTERATIONS AND ADDITION OF RESISTORS R30 AND R31.

PARTS LOCATION INDEX

REF. DESIG.	LOC.	REF. DESIG.	LOC.	REF. DESIG.	LOC.	REF. DESIG.	LOC.
C1	2D	E3	2B	Q9	6C	T1	6B
C2	2B	E4	2B	R1	3B	Z1	10C
C3	2C	E5	5B	R2	2C	Z2	10D
C4	3C	E6	5B	R3	2C	Z3	3D
C5	5C	E7	7B	R4	2D		
C6	5D	E8	5C	R5	3B		
C7	7C	E9	11B	R6	5C		
C8	7C	E10	11B	R7	5C		
C9	10C	E12	11E	R8	5C		
C10	7B	E13	11E	R9	6C		
C11	7B	FL1	4C	R10	7C		
C12	7C	FL2	8C	R11	7B		
C13	11D	L3	2D	R12	11C		
E1	2E	L4	11D	R30	7C		
E2	2D	Q8	2C	R31	2C		

Figure 5-84. 1 and 10 KC Error Mixer (Component Side Down), Component and Test Point Location

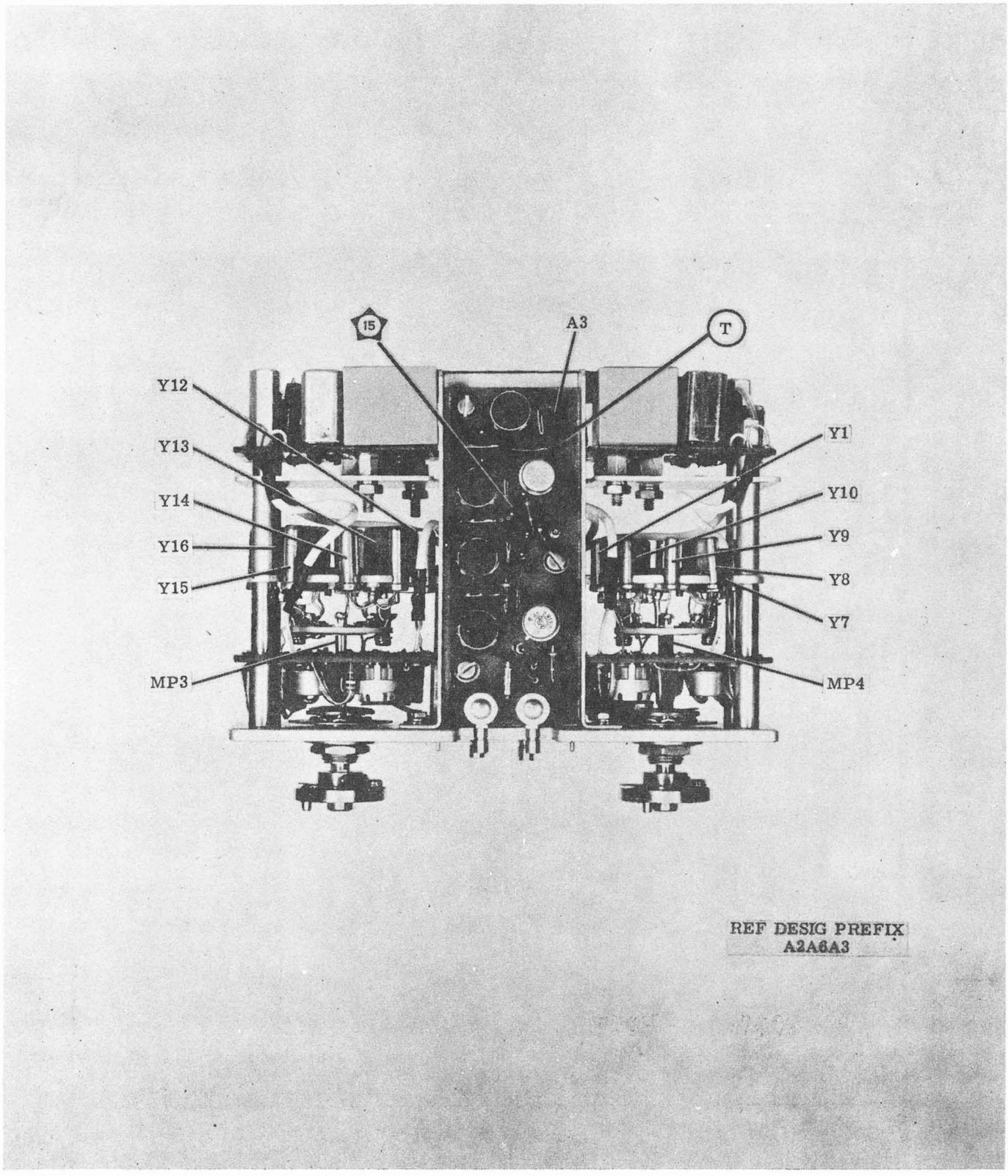

Figure 5-85. 1 and 10 KC Synthesizer Electronic Subassembly, Rear View, Component Location

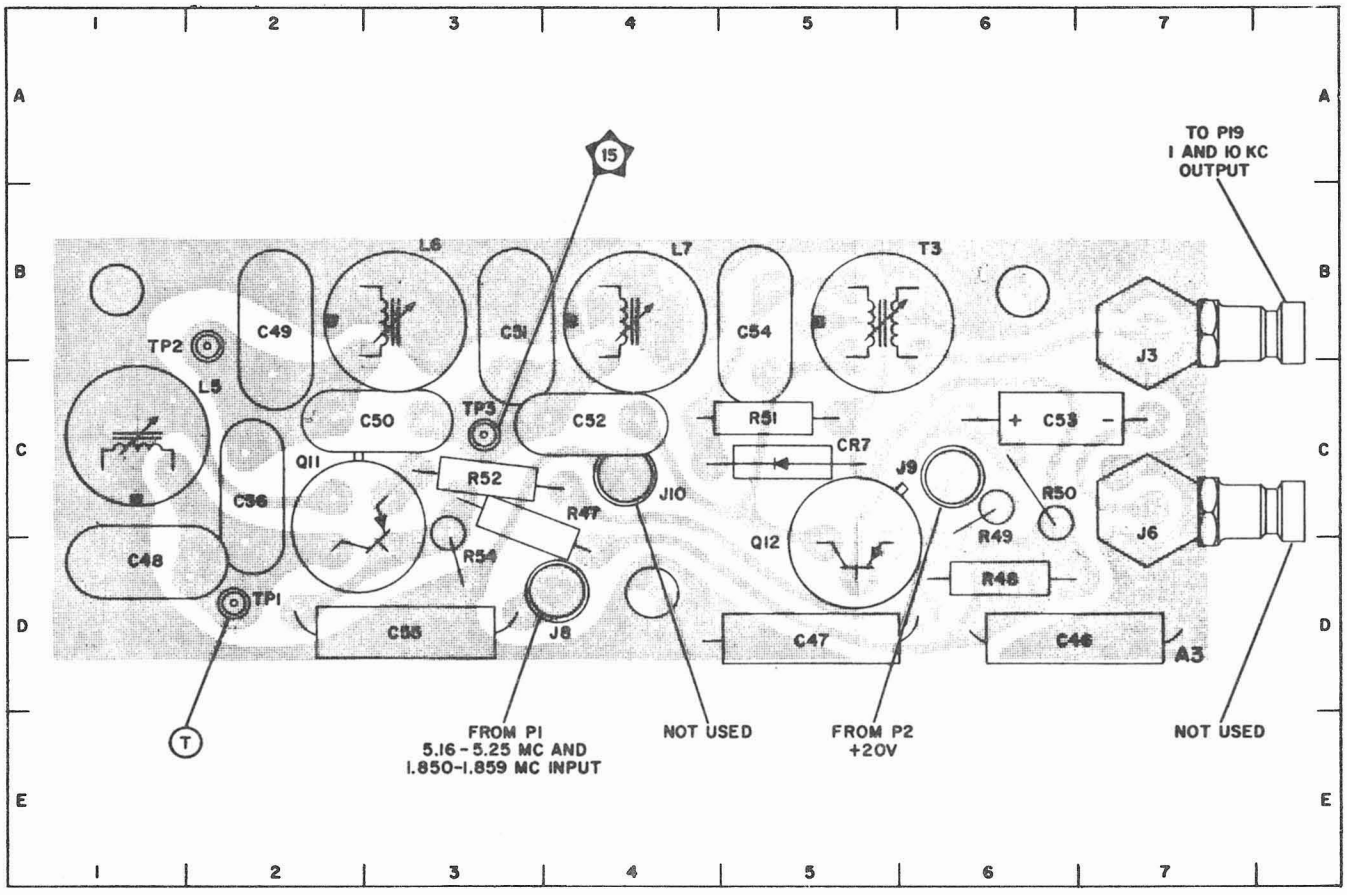

PARTS LOCATION INDEX

REF DESIG	LOC	REF DESIG	LOC	REF DESIG	LOC
C46	7D	CR7	5C	R47	3C
C47	5D	J3	7B	R48	6D
C48	1D	J6	7C	R49	6C
C49	2B	J8	4D	R50	6C
C50	2C	J9	6C	R51	5C
C51	3B	J10	4C	R52	3C
C52	4C	L5	1C	R54	3C
C53	6C	L6	3B	T3	5B
C54	5B	L7	4B	TP1	2D
C55	3D	Q11	2C	TP2	2B
C56	2C	Q12	5D	TP3	3C

NOTE:
REF. DESIG. PREFIX A2A6A3.

Figure 5-86. 1 and 10 KC Synthesizer Output Circuit (Foil Side Up), Component and Test Point Location

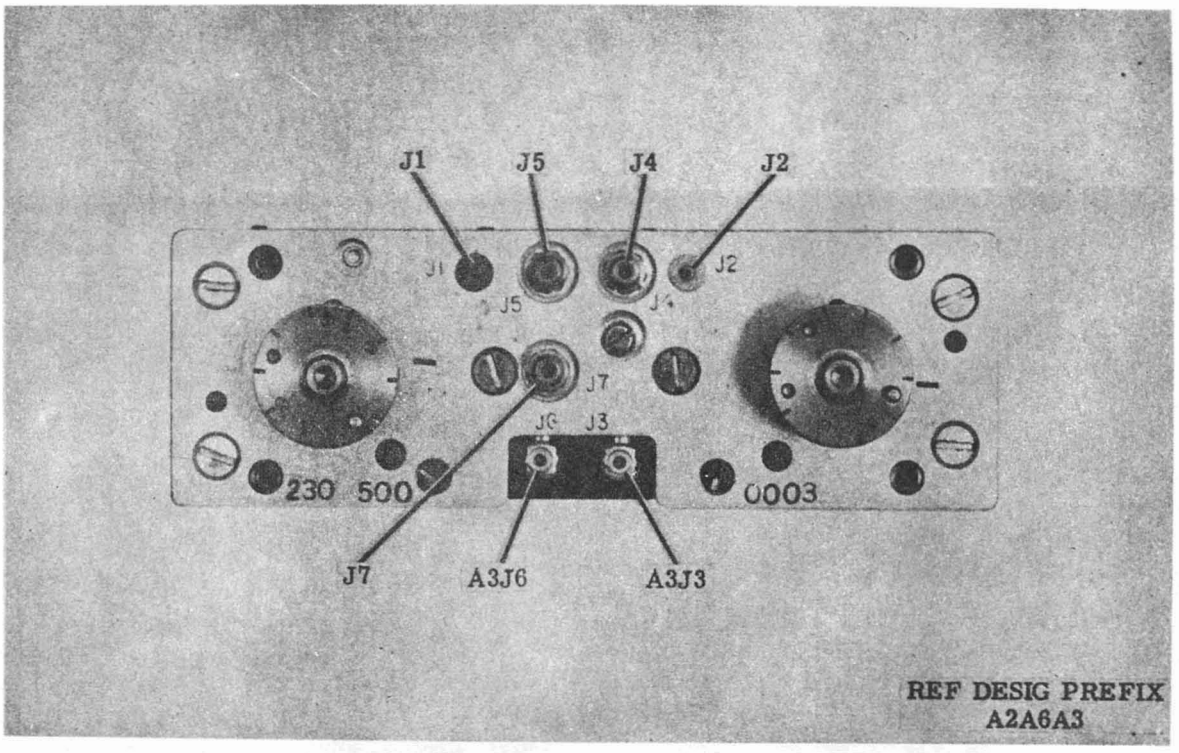

Figure 5-87. 1 and 10 KC Synthesizer Electronic Subassembly, Bottom View, Component Location

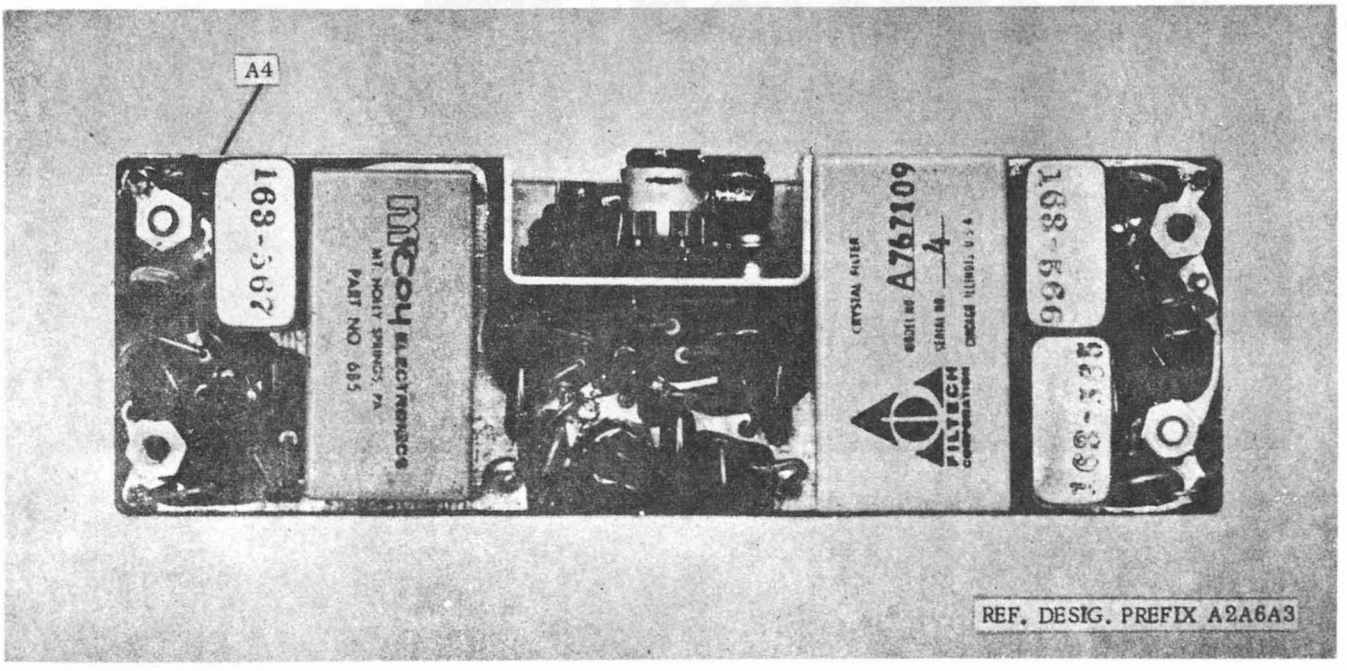

Figure 5-88. 1 and 10 KC Synthesizer Electronic Subassembly, Top View, Component Location

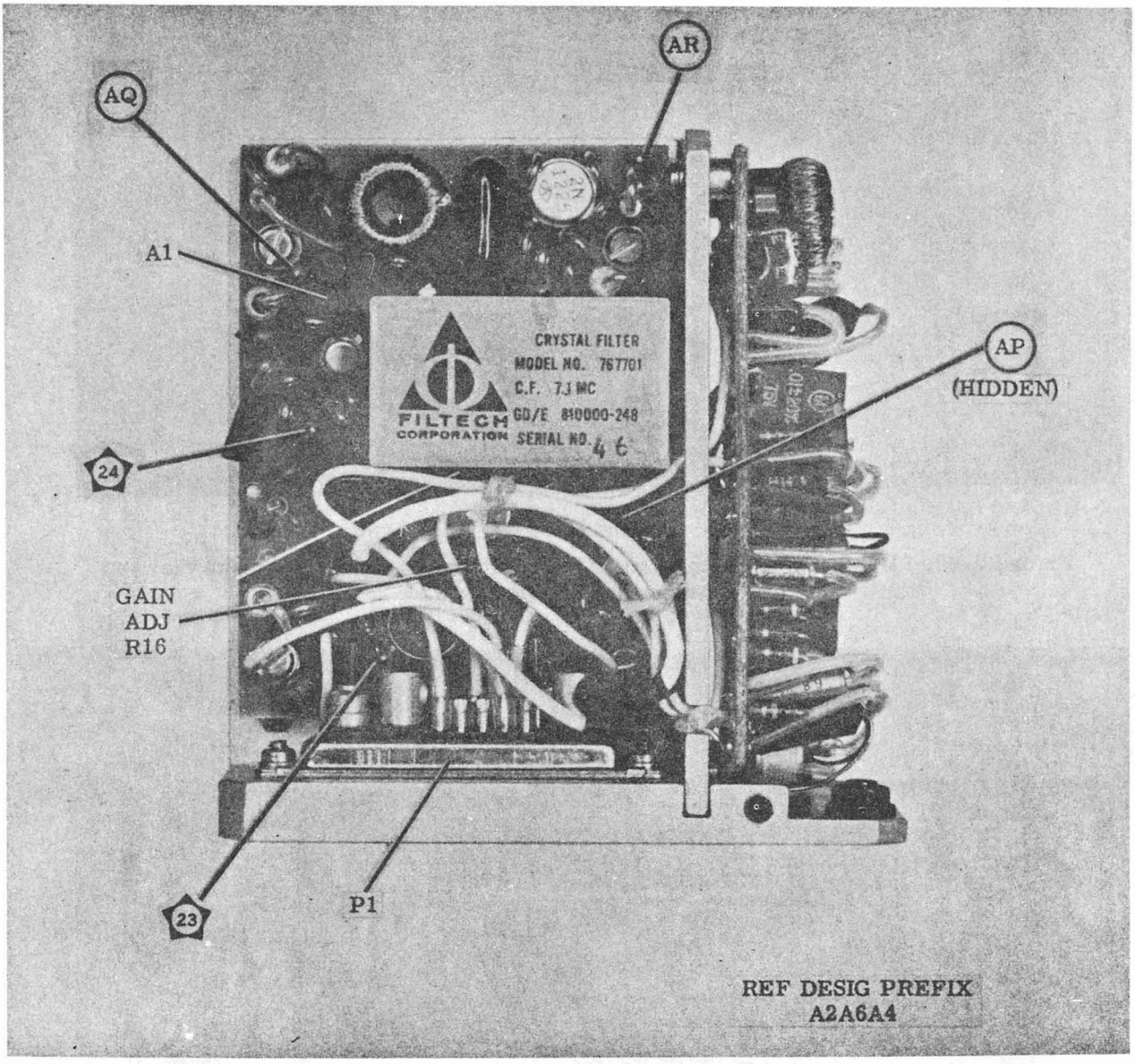

Figure 5-89. 500 CPS Synthesizer Electronic Subassembly, Left Side, Component Location

NOTE:
REF. DESIG. PREFIX A2A6A4.

PARTS LOCATION INDEX

REF DESIG	LOC	REF DESIG	LOC
C1	5G	Q3	4E
C2	6E	Q4	5B
C3	6D	Q5	3B
C4	6C	R1	5D
C5	5E	R2	5D
C6	2E	R3	6D
C7	2E	R4	6D
C8	3F	R5	5C
C9	3F	R6	5D
C10	3F	R7	2E
C11	5E	R8	2E
C12	4E	R9	2F
C13	6F	R10	3G
C14	6C	R11	3F
C15	6B	R12	4G
C16	5A	R13	4F
C17	4B	R14	3E
C18	2C	R15	3E
C19	3C	R16	4F
C20	2B	R17	6C
E1	6E	R18	4C
E2	6E	R19	5B
E3	5G	R20	6A
E4	4G	R21	3B
E5	5G	R22	3A
E6	3G	R23	3C
E7	5F	R24	3B
E8	5F	R25	3B
E9	5F	R26	3A
E10	2B	T1	4F
FL1	3C	T2	5B
L1	4G	TP1	5D
L2	5F	TP2	5E
Q1	5C	TP3	6C
Q2	2F	TP4	3E
		TP5	4G
		TP6	2A

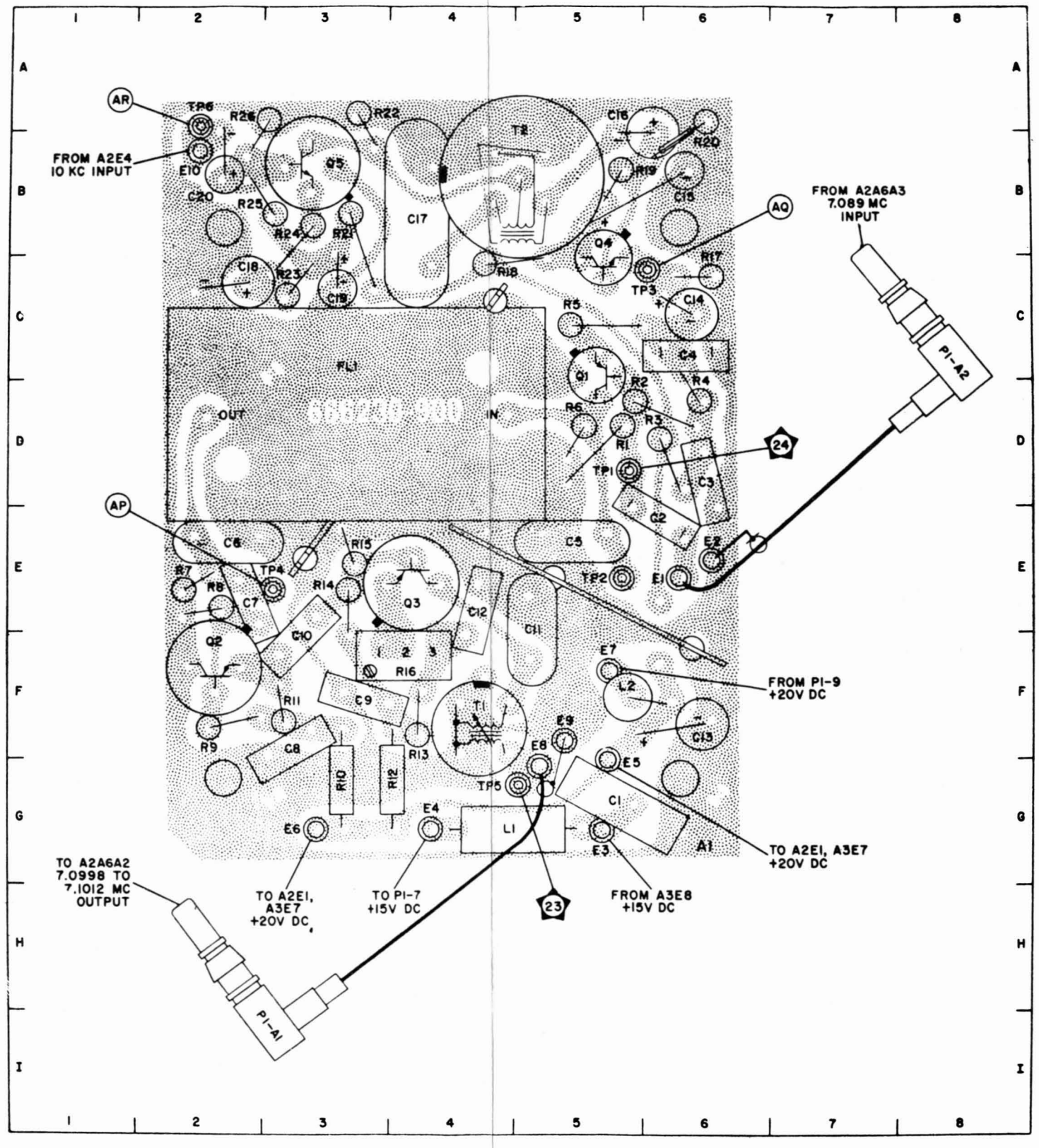

Figure 5-90. 7.1 MC Mixer (Foil Side Up), Component and Test Point Location

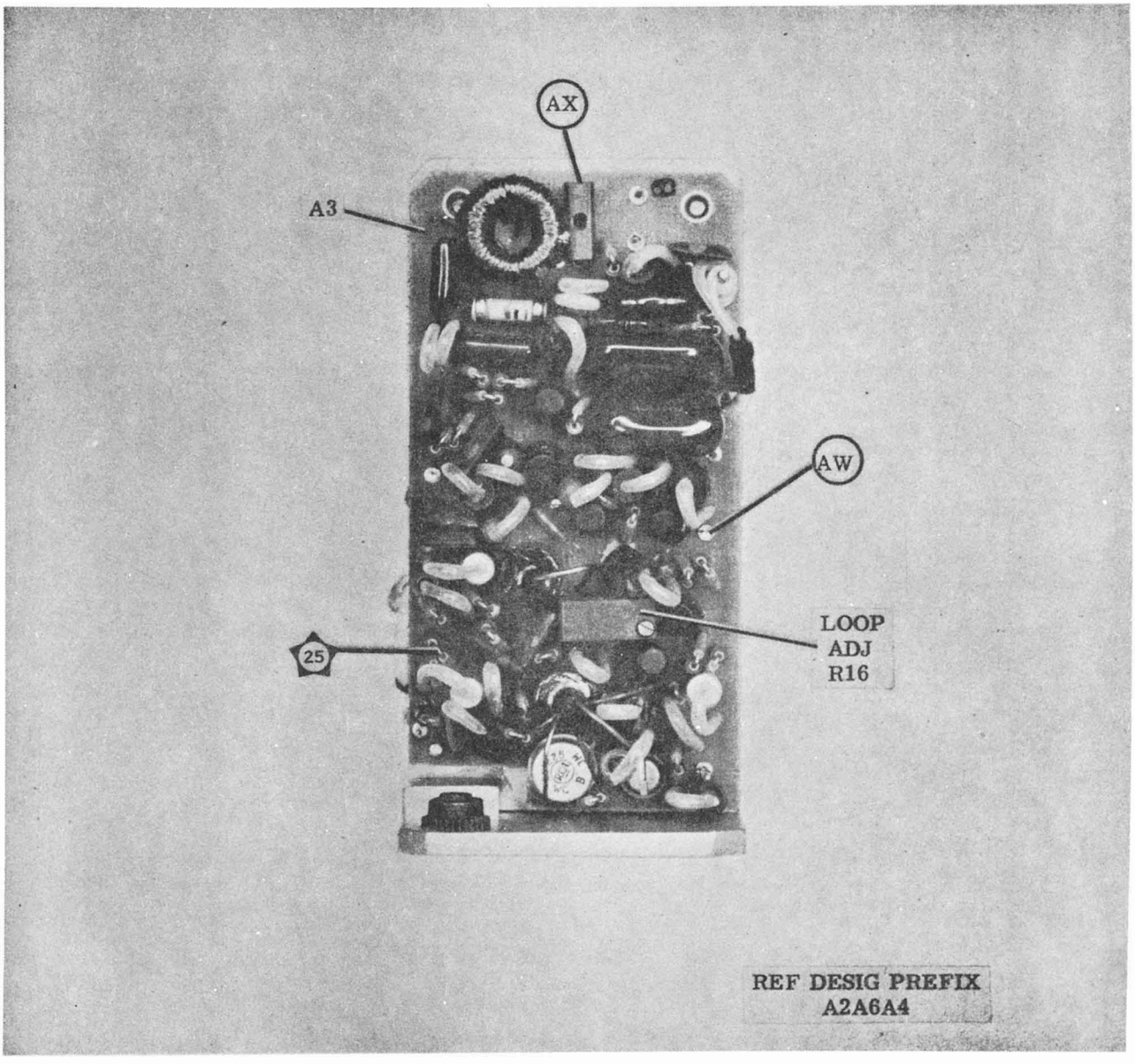

Figure 5-91. 500 CPS Synthesizer Electronic Subassembly, Front View Component Location

PARTS LOCATION INDEX

REF DESIG	LOC	REF DESIG	LOC	REF DESIG	LOC	REF DESIG	LOC	REF DESIG	LOC	REF DESIG	LOC
C1	5C	C17	7E	CR8	6D	L2	5D	R3	5D	R19	7E
C2	6C	C18	7C	CR9	7C	L3	4D	R4	5D	R20	8E
C3	5C	C19	5C	E1	2E	L4	2C	R5	4D	R21	6D
C4	3E	C20	6C	E2	7B	L5	2E	R6	3E	R22	6C
C5	4E	C21	7C	E3	8B	L6	8E	R7	4C	R23	7C
C6	3D	C22	6B	E4	8E	L7	6C	R8	4C	R24	6C
C7	3C	C23	5E	E5	5E	P1	6A	R9	4C	R25	6C
C8	2B	C24	7C	E6	4E	Q1	4D	R10	4B	R26	5E
C9	3E	C25	4C	E7	5B	Q2	4D	R11	3E	R27	6B
C10	2E	CR1	5C	E8	5D	Q3	5D	R12	2D	R28	7C
C11	3C	CR2	3D	E9	5B	Q4	6E	R13	5E	R29	7B
C12	2E	CR3	3D	E10	6C	Q5	7E	R14	6E	R30	7B
C13	4B	CR4	3D	E11	2D	Q6	5E	R15	6E	R31	8D
C14	6D	CR5	3B	E12	2E	Q7	8D	R16	6D	RT1	4C
C15	7E	CR6	3C	J1	3E	R1	5C	R17	7E	T1	7D
C16	7D	CR7	7E	L1	5C	R2	4C	R18	6E	TP2	2D

NOTES:

1. REF. DESIG. PREFIX A2A6A4.
2. (1) L1, L2, L3, L5 AND L6 ARE VERTICALLY MOUNTED COILS, WITH ONE TERMINAL TO BOARD, OTHER ON TOP.
   (2) L7, T1 ALL CONNECTIONS ON TOP.
   (3) CR1 IS VERICALLY MOUNTED ZENER DIODE, ANODE TO BOARD.
   (4) CR2, CR3, AND CR4 ARE VOLTAGE VARIABLE CAPACITORS.
   (5) CR5, CR9 ARE VERTICALLY MOUNTED DIODES, CATHODE TO BOARD.
   (6) CR6, CR7, AND CR8 ARE VERTICALLY MOUNTED DIODES, ANODE TO BOARD.

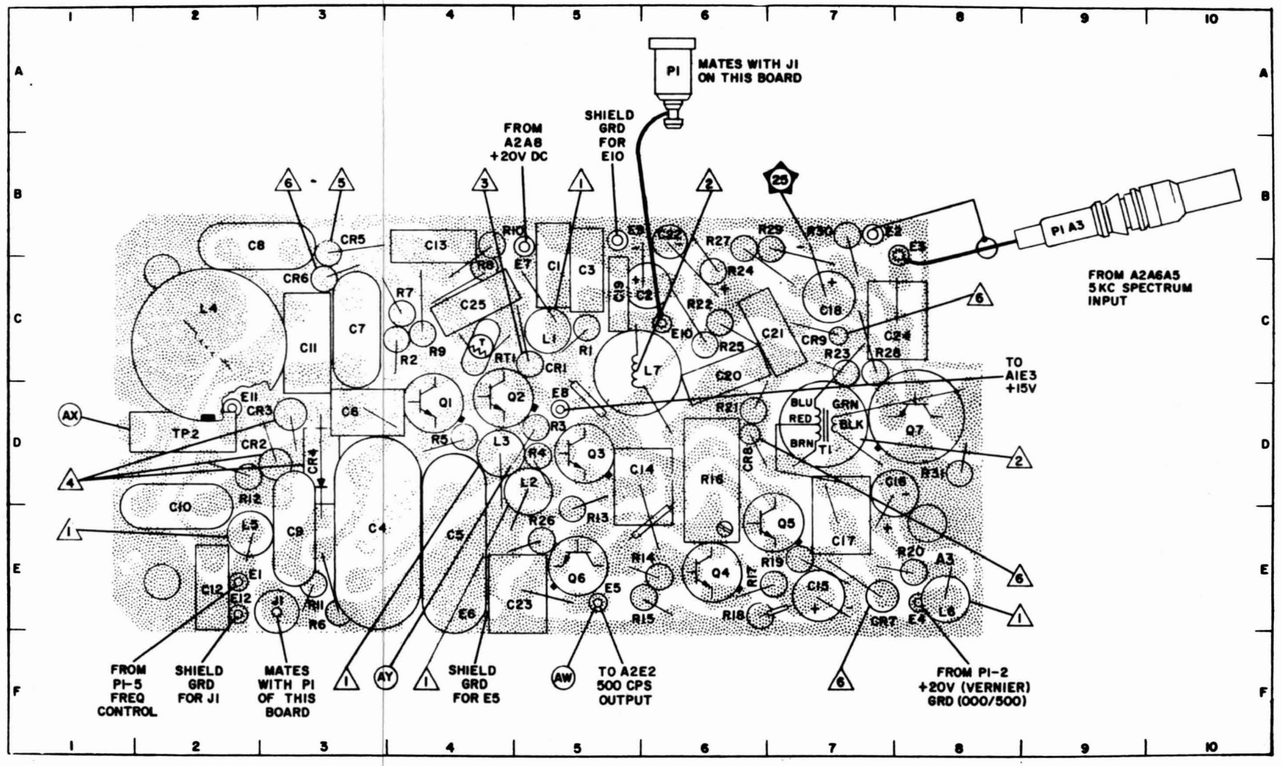

Figure 5-92. 500 CPS Oscillator (Foil Side Up), Component and Test Point Location

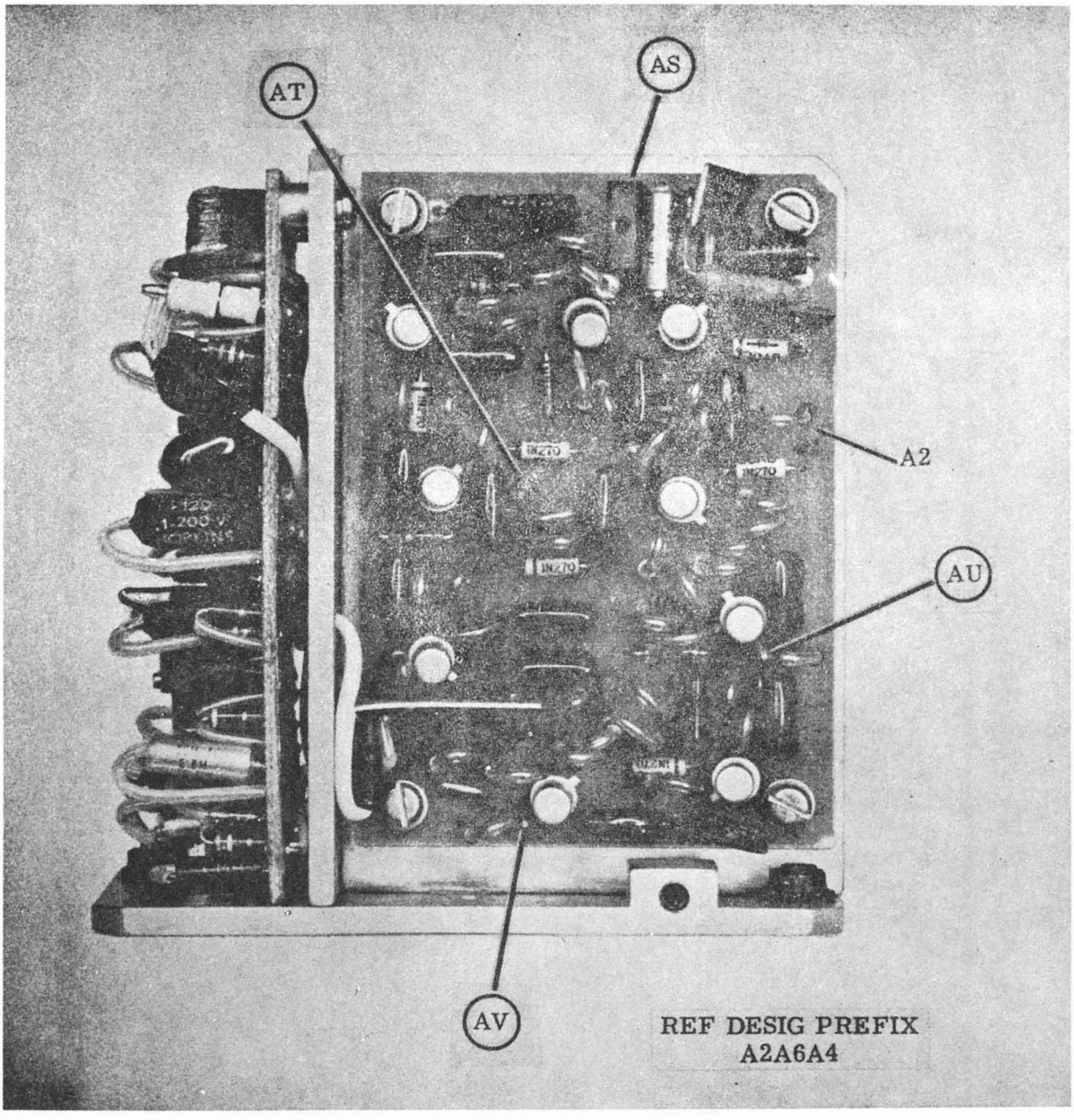

Figure 5-93. 500 CPS Synthesizer Electronic Subassembly, Right Side Component Location

NOTES:
1. REF. DESIG. PREFIX A2A6A4.
2. ⚠1 CR2, CR7, CR12 ARE DIODES, VERTICALLY MOUNTED, ANODE TO BOARD.

PARTS LOCATIONS INDEX

REF DESIG	LOC	REF DESIG	LOC	REF DESIG	LOC
C1	C8	CR9	E5	R16	B5
C2	C7	CR10	E6	R17	C6
C3	E3	CR11	F6	R18	C5
C4	E2	CR12	C4	R19	C6
C5	D3	E1	B7	R20	B6
C6	D2	E2	F3	R21	C4
C7	C2	E3	F2	R22	C5
C8	C3	E4	D7	R23	C6
C9	B3	L1	C7	R24	D5
C10	B4	Q1	C2	R25	E4
C11	B6	Q2	C4	R26	E4
C12	C6	Q3	C6	R27	E4
C13	D6	Q4	C5	R28	F3
C14	D5	Q5	F3	R29	D5
C15	E3	Q6	E5	R30	E6
C16	F4	Q7	D6	R31	E4
C17	E5	Q8	F6	R32	F4
C18	F5	Q9	D2	R33	D6
C19	F7	R1	C8	R34	D6
C20	E7	R2	F2	R35	E7
C21	E6	R3	D3	R36	D7
C22	E7	R4	D3	R37	E6
C23	D7	R5	E2	R38	F6
C24	D3	R6	D3	R39	E6
C25	D4	R7	C4	R40	E7
CR1	C7	R8	C3	R41	D7
CR2	E2	R9	D2	TP1	E2
CR3	C2	R10	C3	TP2	B3
CR4	C3	R11	C2	TP3	D5
CR5	B6	R12	C4	TP4	E5
CR6	C5	R13	D4	TP5	D7
CR7	D4	R14	B3		
CR8	D4	R15	B3		

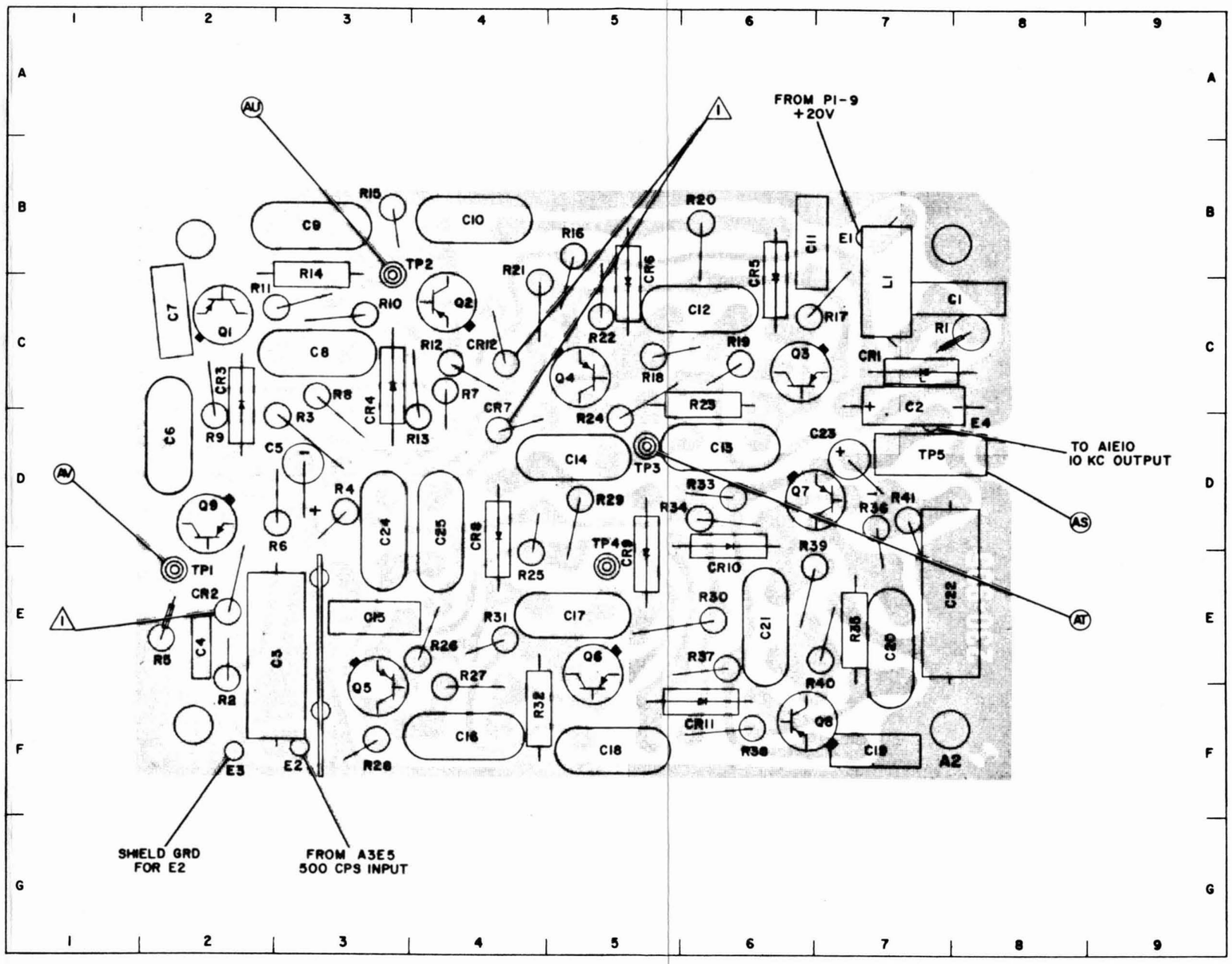

Figure 5-94. Divide-By-Ten Multivibrators (Foil Side Up), Component and Test Point Location

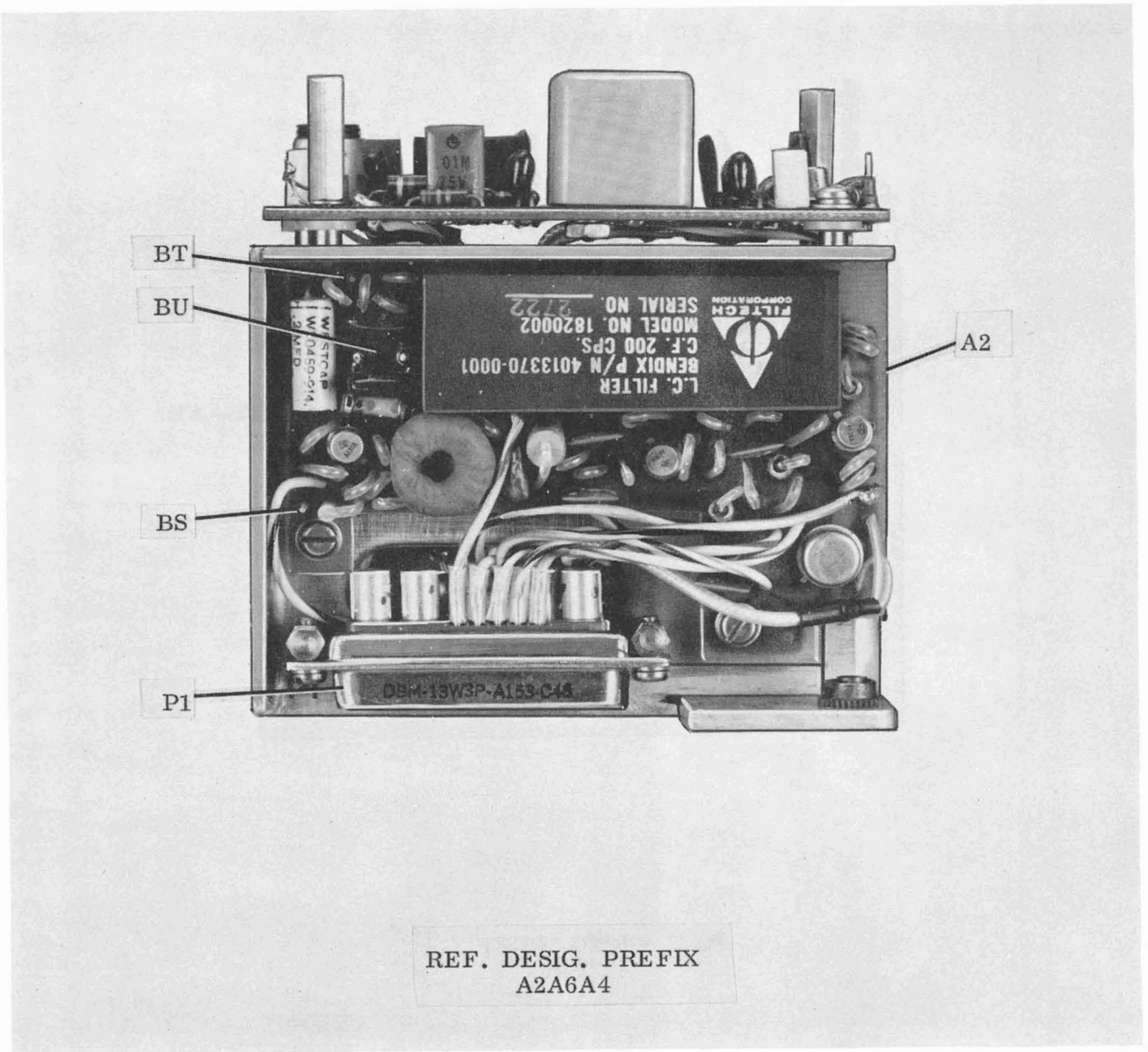

REF. DESIG. PREFIX
A2A6A4

Figure 5-94A. 100 CPS Synthesizer Electronic Subassembly, Left Side View, Component and Test Point Location (Used on R-1051B/URR)

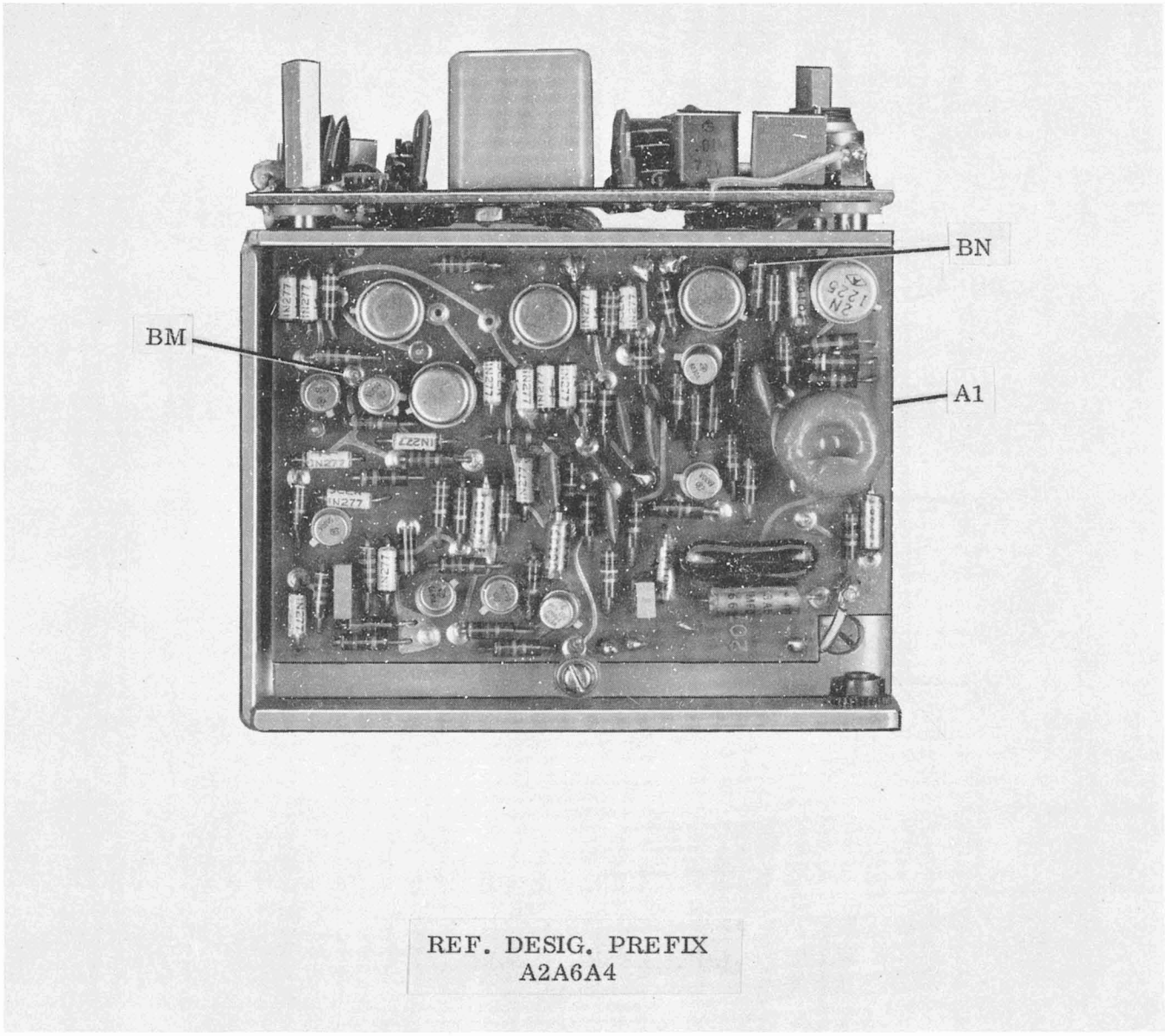

Figure 5-94B. 100 CPS Synthesizer Electronic Subassembly, Right Side View, Component and Test Point Location (Used on R-1051B/URR)

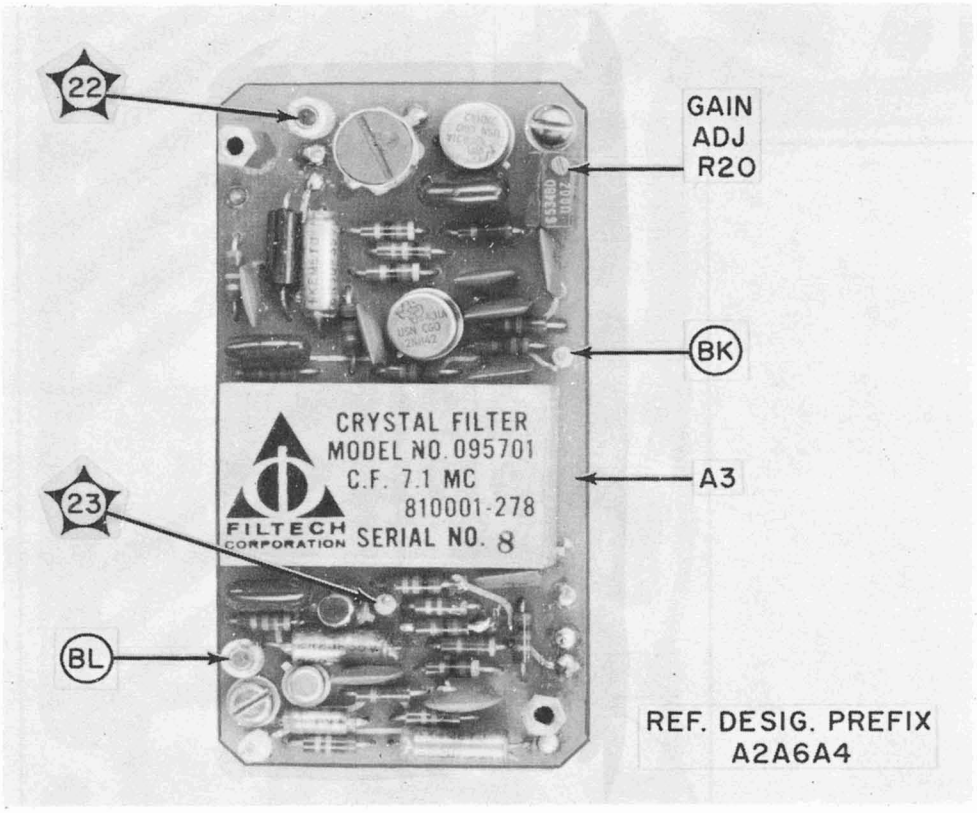

Figure 5-94C. 100 CPS Synthesizer Electronic Subassembly, Top View, Component Location

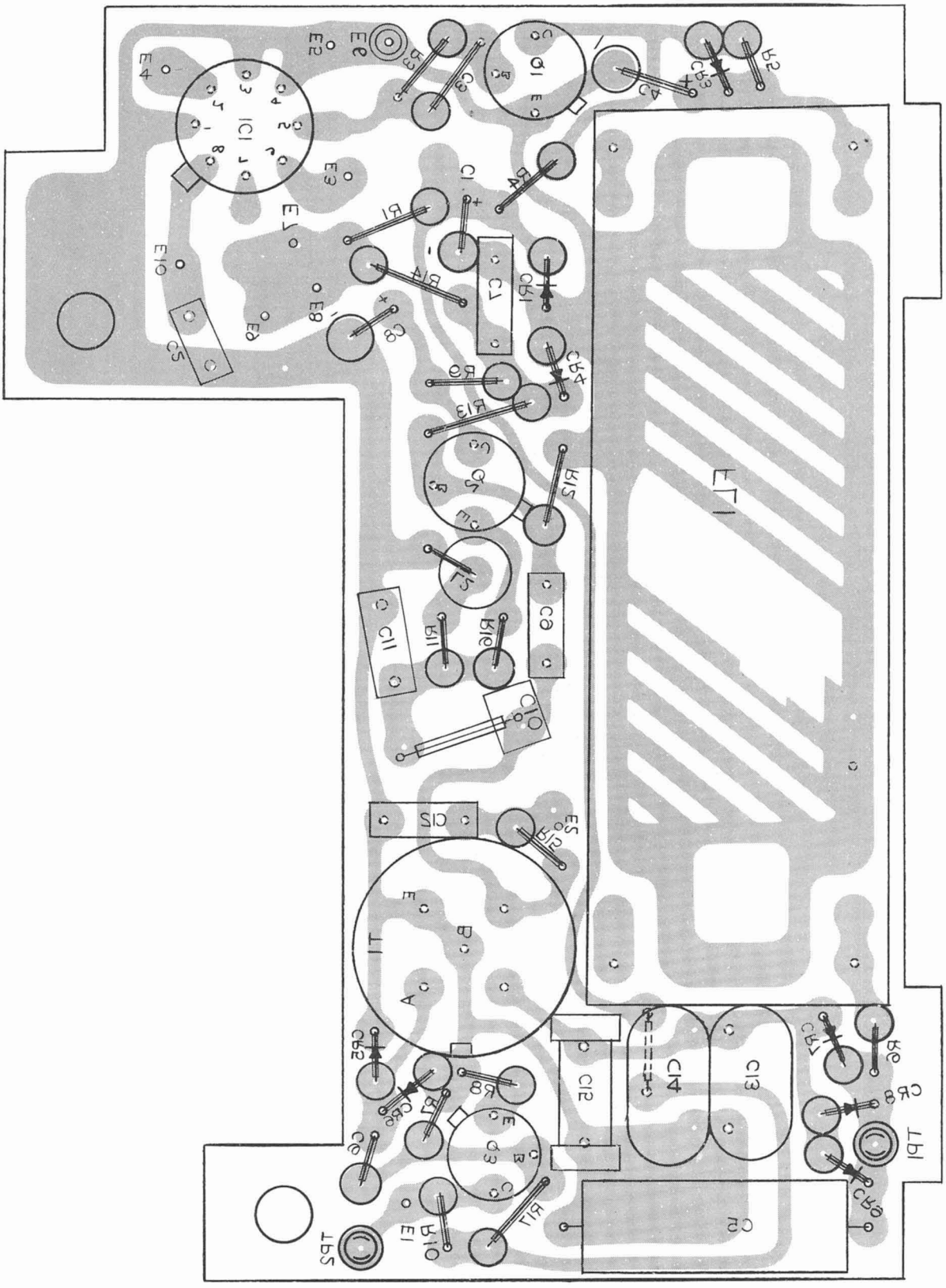

Figure 5-94D. 100 CPS Oscillator (Foil Side Up), Component and Test Point Location (Used on R-1051B/URR)

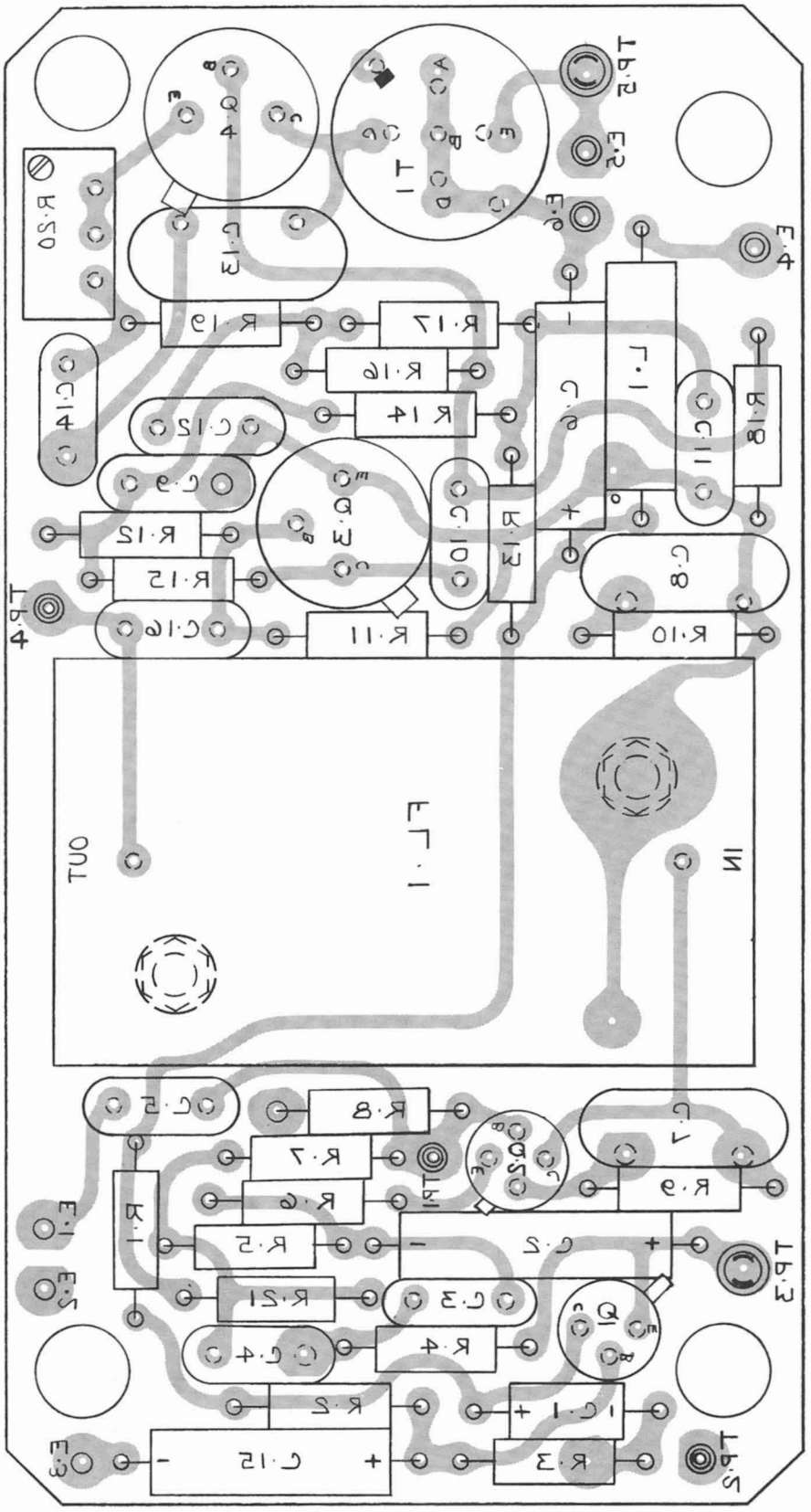
OUT
IN
L1
L2
L3
L4
L5
L6
L7
L8
L9
L10
L11
L12
L13
L14
L15
L16
L17
L18
L19
L20
L21
C1
C2
C3
C4
C5
C6
C7
C8
C9
C10
C11
C12
C13
C14
C15
C16
C17
C18
C19
C20
C21
C22
C23
C24
C25
C26
C27
C28
C29
C30
C31
C32
C33
C34
C35
C36
C37
C38
C39
C40
C41
C42
C43
C44
C45
C46
C47
C48
C49
C50
C51
C52
C53
C54
C55
C56
C57
C58
C59
C60
C61
C62
C63
C64
C65
C66
C67
C68
C69
C70
C71
C72
C73
C74
C75
C76
C77
C78
C79
C80
C81
C82
C83
C84
C85
C86
C87
C88
C89
C90
C91
C92
C93
C94
C95
C96
C97
C98
C99
C100
C101
C102
C103
C104
C105
C106
C107
C108
C109
C110
C111
C112
C113
C114
C115
C116
C117
C118
C119
C120
C121
C122
C123
C124
C125
C126
C127
C128
C129
C130
C131
C132
C133
C134
C135
C136
C137
C138
C139
C140
C141
C142
C143
C144
C145
C146
C147
C148
C149
C150
C151
C152
C153
C154
C155
C156
C157
C158
C159
C160
C161
C162
C163
C164
C165
C166
C167
C168
C169
C170
C171
C172
C173
C174
C175
C176
C177
C178
C179
C180
C181
C182
C183
C184
C185
C186
C187
C188
C189
C190
C191
C192
C193
C194
C195
C196
C197
C198
C199
C200
C201
C202
C203
C204
C205
C206
C207
C208
C209
C210
C211
C212
C213
C214
C215
C216
C217
C218
C219
C220
C221
C222
C223
C224
C225
C226
C227
C228
C229
C230
C231
C232
C233
C234
C235
C236
C237
C238
C239
C240
C241
C242
C243
C244
C245
C246
C247
C248
C249
C250
C251
C252
C253
C254
C255
C256
C257
C258
C259
C260
C261
C262
C263
C264
C265
C266
C267
C268
C269
C270
C271
C272
C273
C274
C275
C276
C277
C278
C279
C280
C281
C282
C283
C284
C285
C286
C287
C288
C289
C290
C291
C292
C293
C294
C295
C296
C297
C298
C299
C300
C301
C302
C303
C304
C305
C306
C307
C308
C309
C310
C311
C312
C313
C314
C315
C316
C317
C318
C319
C320
C321
C322
C323
C324
C325
C326
C327
C328
C329
C330
C331
C332
C333
C334
C335
C336
C337
C338
C339
C340
C341
C342
C343
C344
C345
C346
C347
C348
C349
C350
C351
C352
C353
C354
C355
C356
C357
C358
C359
C360
C361
C362
C363
C364
C365
C366
C367
C368
C369
C370
C371
C372
C373
C374
C375
C376
C377
C378
C379
C380
C381
C382
C383
C384
C385
C386
C387
C388
C389
C390
C391
C392
C393
C394
C395
C396
C397
C398
C399
C400
C401
C402
C403
C404
C405
C406
C407
C408
C409
C410
C411
C412
C413
C414
C415
C416
C417
C418
C419
C420
C421
C422
C423
C424
C425
C426
C427
C428
C429
C430
C431
C432
C433
C434
C435
C436
C437
C438
C439
C440
C441
C442
C443
C444
C445
C446
C447
C448
C449
C450
C451
C452
C453
C454
C455
C456
C457
C458
C459
C460
C461
C462
C463
C464
C465
C466
C467
C468
C469
C470
C471
C472
C473
C474
C475
C476
C477
C478
C479
C480
C481
C482
C483
C484
C485
C486
C487
C488
C489
C490
C491
C492
C493
C494
C495
C496
C497
C498
C499
C500
C501
C502
C503
C504
C505
C506
C507
C508
C509
C510
C511
C512
C513
C514
C515
C516
C517
C518
C519
C520
C521
C522
C523
C524
C525
C526
C527
C528
C529
C530
C531
C532
C533
C534
C535
C536
C537
C538
C539
C540
C541
C542
C543
C544
C545
C546
C547
C548
C549
C550
C551
C552
C553
C554
C555
C556
C557
C558
C559
C560
C561
C562
C563
C564
C565
C566
C567
C568
C569
C570
C571
C572
C573
C574
C575
C576
C577
C578
C579
C580
C581
C582
C583
C584
C585
C586
C587
C588
C589
C590
C591
C592
C593
C594
C595
C596
C597
C598
C599
C600
C601
C602
C603
C604
C605
C606
C607
C608
C609
C610
C611
C612
C613
C614
C615
C616
C617
C618
C619
C620
C621
C622
C623
C624
C625
C626
C627
C628
C629
C630
C631
C632
C633
C634
C635
C636
C637
C638
C639
C640
C641
C642
C643
C644
C645
C646
C647
C648
C649
C650
C651
C652
C653
C654
C655
C656
C657
C658
C659
C660
C661
C662
C663
C664
C665
C666
C667
C668
C669
C670
C671
C672
C673
C674
C675
C676
C677
C678
C679
C680
C681
C682
C683
C684
C685
C686
C687
C688
C689
C690
C691
C692
C693
C694
C695
C696
C697
C698
C699
C700
C701
C702
C703
C704
C705
C706
C707
C708
C709
C710
C711
C712
C713
C714
C715
C716
C717
C718
C719
C720
C721
C722
C723
C724
C725
C726
C727
C728
C729
C730
C731
C732
C733
C734
C735
C736
C737
C738
C739
C740
C741
C742
C743
C744
C745
C746
C747
C748
C749
C750
C751
C752
C753
C754
C755
C756
C757
C758
C759
C760
C761
C762
C763
C764
C765
C766
C767
C768
C769
C770
C771
C772
C773
C774
C775
C776
C777
C778
C779
C780
C781
C782
C783
C784
C785
C786
C787
C788
C789
C790
C791
C792
C793
C794
C795
C796
C797
C798
C799
C800
C801
C802
C803
C804
C805
C806
C807
C808
C809
C810
C811
C812
C813
C814
C815
C816
C817
C818
C819
C820
C821
C822
C823
C824
C825
C826
C827
C828
C829
C830
C831
C832
C833
C834
C835
C836
C837
C838
C839
C840
C841
C842
C843
C844
C845
C846
C847
C848
C849
C850
C851
C852
C853
C854
C855
C856
C857
C858
C859
C860
C861
C862
C863
C864
C865
C866
C867
C868
C869
C870
C871
C872
C873
C874
C875
C876
C877
C878
C879
C880
C881
C882
C883
C884
C885
C886
C887
C888
C889
C890
C891
C892
C893
C894
C895
C896
C897
C898
C899
C900
C901
C902
C903
C904
C905
C906
C907
C908
C909
C910
C911
C912
C913
C914
C915
C916
C917
C918
C919
C920
C921
C922
C923
C924
C925
C926
C927
C928
C929
C930
C931
C932
C933
C934
C935
C936
C937
C938
C939
C940
C941
C942
C943
C944
C945
C946
C947
C948
C949
C950
C951
C952
C953
C954
C955
C956
C957
C958
C959
C960
C961
C962
C963
C964
C965
C966
C967
C968
C969
C970
C971
C972
C973
C974
C975
C976
C977
C978
C979
C980
C981
C982
C983
C984
C985
C986
C987
C988
C989
C990
C991
C992
C993
C994
C995
C996
C997
C998
C999
C1000
C1001
C1002
C1003
C1004
C1005
C1006
C1007
C1008
C1009
C1010
C1011
C1012
C1013
C1014
C1015
C1016
C1017
C1018
C1019
C1020
C1021
C1022
C1023
C1024
C1025
C1026
C1027
C1028
C1029
C1030
C1031
C1032
C1033
C1034
C1035
C1036
C1037
C1038
C1039
C1040
C1041
C1042
C1043
C1044
C1045
C1046
C1047
C1048
C1049
C1050
C1051
C1052
C1053
C1054
C1055
C1056
C1057
C1058
C1059
C1060
C1061
C1062
C1063
C1064
C1065
C1066
C1067
C1068
C1069
C1070
C1071
C1072
C1073
C1074
C1075
C1076
C1077
C1078
C1079
C1080
C1081
C1082
C1083
C1084
C1085
C1086
C1087
C1088
C1089
C1090
C1091
C1092
C1093
C1094
C1095
C1096
C1097
C1098
C1099
C1100
C1101
C1102
C1103
C1104
C1105
C1106
C1107
C1108
C1109
C1110
C1111
C1112
C1113
C1114
C1115
C1116
C1117
C1118
C1119
C1120
C1121
C1122
C1123
C1124
C1125
C1126
C1127
C1128
C1129
C1130
C1131
C1132
C1133
C1134
C1135
C1136
C1137
C1138
C1139
C1140
C1141
C1142
C1143
C1144
C1145
C1146
C1147
C1148
C1149
C1150
C1151
C1152
C1153
C1154
C1155
C1156
C1157
C1158
C1159
C1160
C1161
C1162
C1163
C1164
C1165
C1166
C1167
C1168
C1169
C1170
C1171
C1172
C1173
C1174
C1175
C1176
C1177
C1178
C1179
C1180
C1181
C1182
C1183
C1184
C1185
C1186
C1187
C1188
C1189
C1190
C1191
C1192
C1193
C1194
C1195
C1196
C1197
C1198
C1199
C1200
C1201
C1202
C1203
C1204
C1205
C1206
C1207
C1208
C1209
C1210
C1211
C1212
C1213
C1214
C1215
C1216
C1217
C1218
C1219
C1220
C1221
C1222
C1223
C1224
C1225
C1226
C1227
C1228
C1229
C1230
C1231
C1232
C1233
C1234
C1235
C1236
C1237
C1238
C1239
C1240
C1241
C1242
C1243
C1244
C1245
C1246
C1247
C1248
C1249
C1250
C1251
C1252
C1253
C1254
C1255
C1256
C1257
C1258
C1259
C1260
C1261
C1262
C1263
C1264
C1265
C1266
C1267
C1268
C1269
C1270
C1271
C1272
C1273
C1274
C1275
C1276
C1277
C1278
C1279
C1280
C1281
C1282
C1283
C1284
C1285
C1286
C1287
C1288
C1289
C1290
C1291
C1292
C1293
C1294
C1295
C1296
C1297
C1298
C1299
C1300
C1301
C1302
C1303
C1304
C1305
C1306
C1307
C1308
C1309
C1310
C1311
C1312
C1313
C1314
C1315
C1316
C1317
C1318
C1319
C1320
C1321
C1322
C1323
C1324
C1325
C1326
C1327
C1328
C1329
C1330
C1331
C1332
C1333
C1334
C1335
C1336
C1337
C1338
C1339
C1340
C1341
C1342
C1343
C1344
C1345
C1346
C1347
C1348
C1349
C1350
C1351
C1352
C1353
C1354
C1355
C1356
C1357
C1358
C1359
C1360
C1361
C1362
C1363
C1364
C1365
C1366
C1367
C1368
C1369
C1370
C1371
C1372
C1373
C1374
C1375
C1376
C1377
C1378
C1379
C1380
C1381
C1382
C1383
C1384
C1385
C1386
C1387
C1388
C1389
C1390
C1391
C1392
C1393
C1394
C1395
C1396
C1397
C1398
C1399
C1400
C1401
C1402
C1403
C1404
C1405
C1406
C1407
C1408
C1409
C1410
C1411
C1412
C1413
C1414
C1415
C1416
C1417
C1418
C1419
C1420
C1421
C1422
C1423
C1424
C1425
C1426
C1427
C1428
C1429
C1430
C1431
C1432
C1433
C1434
C1435
C1436
C1437
C1438
C1439
C1440
C1441
C1442
C1443
C1444
C1445
C1446
C1447
C1448
C1449
C1450
C1451
C1452
C1453
C1454
C1455
C1456
C1457
C1458
C1459
C1460
C1461
C1462
C1463
C1464
C1465
C1466
C1467
C1468
C1469
C1470
C1471
C1472
C1473
C1474
C1475
C1476
C1477
C1478
C1479
C1480
C1481
C1482
C1483
C1484
C1485
C1486
C1487
C1488
C1489
C1490
C1491
C1492
C1493
C1494
C1495
C1496
C1497
C1498
C1499
C1500
C1501
C1502
C1503
C1504
C1505
C1506
C1507
C1508
C1509
C1510
C1511
C1512
C1513
C1514
C1515
C1516
C1517
C1518
C1519
C1520
C1521
C1522
C1523
C1524
C1525
C1526
C1527
C1528
C1529
C1530
C1531
C1532
C1533
C1534
C1535
C1536
C1537
C1538
C1539
C1540
C1541
C1542
C1543
C1544
C1545
C1546
C1547
C1548
C1549
C1550
C1551
C1552
C1553
C1554
C1555
C1556
C1557
C1558
C1559
C1560
C1561
C1562
C1563
C1564
C1565
C1566
C1567
C1568
C1569
C1570
C1571
C1572
C1573
C1574
C1575
C1576
C1577
C1578
C1579
C1580
C1581
C1582
C1583
C1584
C1585
C1586
C1587
C1588
C1589
C1590
C1591
C1592
C1593
C1594
C1595
C1596
C1597
C1598
C1599
C1600
C1601
C1602
C1603
C1604
C1605
C1606
C1607
C1608
C1609
C1610
C1611
C1612
C1613
C1614
C1615
C1616
C1617
C1618
C1619
C1620
C1621
C1622
C1623
C1624
C1625
C1626
C1627
C1628
C1629
C1630
C1631
C1632
C1633
C1634
C1635
C1636
C1637
C1638
C1639
C1640
C1641
C1642
C1643
C1644
C1645
C1646
C1647
C1648
C1649
C1650
C1651
C1652
C1653
C1654
C1655
C1656
C1657
C1658
C1659
C1660
C1661
C1662
C1663
C1664
C1665
C1666
C1667
C1668
C1669
C1670
C1671
C1672
C1673
C1674
C1675
C1676
C1677
C1678
C1679
C1680
C1681
C1682
C1683
C1684
C1685
C1686
C1687
C1688
C1689
C1690
C1691
C1692
C1693
C1694
C1695
C1696
C1697
C1698
C1699
C1700
C1701
C1702
C1703
C1704
C1705
C1706
C1707
C1708
C1709
C1710
C1711
C1712
C1713
C1714
C1715
C1716
C1717
C1718
C1719
C1720
C1721
C1722
C1723
C1724
C1725
C1726
C1727
C1728
C1729
C1730
C1731
C1732
C1733
C1734
C1735
C1736
C1737
C1738
C1739
C1740
C1741
C1742
C1743
C1744
C1745
C1746
C1747
C1748
C1749
C1750
C1751
C1752
C1753
C1754
C1755
C1756
C1757
C1758
C1759
C1760
C1761
C1762
C1763
C1764
C1765
C1766
C1767
C1768
C1769
C1770
C1771
C1772
C1773
C1774
C1775
C1776
C1777
C1778
C1779
C1780
C1781
C1782
C1783
C1784
C1785
C1786
C1787
C1788
C1789
C1790
C1791
C1792
C1793
C1794
C1795
C1796
C1797
C1798
C1799
C1800
C1801
C1802
C1803
C1804
C1805
C1806
C1807
C1808
C1809
C1810
C1811
C1812
C1813
C1814
C1815
C1816
C1817
C1818
C1819
C1820
C1821
C1822
C1823
C1824
C1825
C1826
C1827
C1828
C1829
C1830
C1831
C1832
C1833
C1834
C1835
C1836
C1837
C1838
C1839
C1840
C1841
C1842
C1843
C1844
C1845
C1846
C1847
C1848
C1849
C1850
C1851
C1852
C1853
C1854
C1855
C1856
C1857
C1858
C1859
C1860
C1861
C1862
C1863
C1864
C1865
C1866
C1867
C1868
C1869
C1870
C1871
C1872
C1873
C1874
C1875
C1876
C1877
C1878
C1879
C1880
C1881
C1882
C1883
C1884
C1885
C1886
C1887
C1888
C1889
C1890
C1891
C1892
C1893
C1894
C1895
C1896
C1897
C1898
C1899
C1900
C1901
C1902
C1903
C1904
C1905
C1906
C1907
C1908
C1909
C1910
C1911
C1912
C1913
C1914
C1915
C1916
C1917
C1918
C1919
C1920
C1921
C1922
C1923
C1924
C1925
C1926
C1927
C1928
C1929
C1930
C1931
C1932
C1933
C1934
C1935
C1936
C1937
C1938
C1939
C1940
C1941
C1942
C1943
C1944
C1945
C1946
C1947
C1948
C1949
C1950
C1951
C1952
C1953
C1954
C1955
C1956
C1957
C1958
C1959
C1960
C1961
C1962
C1963
C1964
C1965
C1966
C1967
C1968
C1969
C1970
C1971
C1972
C1973
C1974
C1975
C1976
C1977
C1978
C1979
C1980
C1981
C1982
C1983
C1984
C1985
C1986
C1987
C1988
C1989
C1990
C1991
C1992
C1993
C1994
C1995
C1996
C1997
C1998
C1999
C2000
C2001
C2002
C2003
C2004
C2005
C2006
C2007
C2008
C2009
C2010
C2011
C2012
C2013
C2014
C2015
C2016
C2017
C2018
C2019
C2020
C2021
C2022
C2023
C2024
C2025
C2026
C2027
C2028
C2029
C2030
C2031
C2032
C2033
C2034
C2035
C2036
C2037
C2038
C2039
C2040
C2041
C2042
C2043
C2044
C2045
C2046
C2047
C2048
C2049
C2050
C2051
C2052
C2053
C2054
C2055
C2056
C2057
C2058
C2059
C2060
C2061
C2062
C2063
C2064
C2065
C2066
C2067
C2068
C2069
C2070
C2071
C2072
C2073
C2074
C2075
C2076
C2077
C2078
C2079
C2080
C2081
C2082
C2083
C2084
C2085
C2086
C2087
C2088
C2089
C2090
C2091
C2092
C2093
C2094
C2095
C2096
C2097
C2098
C2099
C2100
C2101
C2102
C2103
C2104
C2105
C2106
C2107
C2108
C2109
C2110
C2111
C2112
C2113
C2114
C2115
C2116
C2117
C2118
C2119
C2120
C2121
C2122
C2123
C2124
C2125
C2126
C2127
C2128
C2129
C2130
C2131
C2132
C2133
C2134
C2135
C2136
C2137
C2138
C2139
C2140
C2141
C2142
C2143
C2144
C2145
C2146
C2147
C2148
C2149
C2150
C2151
C2152
C2153
C2154
C2155
C2156
C2157
C2158
C2159
C2160
C2161
C2162
C2163
C2164
C2165
C2166
C2167
C2168
C2169
C2170
C2171
C2172
C2173
C2174
C2175
C2176
C2177
C2178
C2179
C2180
C2181
C2182
C2183
C2184
C2185
C2186
C2187
C2188
C2189
C2190
C2191
C2192
C2193
C2194
C2195
C2196
C2197
C2198
C2199
C2200
C2201
C2202
C2203
C2204
C2205
C2206
C2207
C2208
C2209
C2210
C2211
C2212
C2213
C2214
C2215
C2216
C2217
C2218
C2219
C2220
C2221
C2222
C2223
C2224
C2225
C2226
C2227
C2228
C2229
C2230
C2231
C2232
C2233
C2234
C2235
C2236
C2237
C2238
C2239
C2240
C2241
C2242
C2243
C2244
C2245
C2246
C2247
C2248
C2249
C2250
C2251
C2252
C2253
C2254
C2255
C2256
C2257
C2258
C2259
C2260
C2261
C2262
C2263
C2264
C2265
C2266
C2267
C2268
C2269
C2270
C2271
C2272
C2273
C2274
C2275
C2276
C2277
C2278
C2279
C2280
C2281
C2282
C2283
C2284
C2285
C2286
C2287
C2288
C2289
C2290
C2291
C2292
C2293
C2294
C2295
C2296
C2297
C2298
C2299
C2300
C2301
C2302
C2303
C2304
C2305
C2306
C2307
C2308
C2309
C2310
C2311
C2312
C2313
C2314
C2315
C2316
C2317
C2318
C2319
C2320
C2321
C2322
C2323
C2324
C2325
C2326
C2327
C2328
C2329
C2330
C2331
C2332
C2333
C2334
C2335
C2336
C2337
C2338
C2339
C2340
C2341
C2342
C2343
C2344
C2345
C2346
C2347
C2348
C2349
C2350
C2351
C2352
C2353
C2354
C2355
C2356
C2357
C2358
C2359
C2360
C2361
C2362
C2363
C2364
C2365
C2366
C2367
C2368
C2369
C2370
C2371
C2372
C2373
C2374
C2375
C2376
C2377
C2378
C2379
C2380
C2381
C2382
C2383
C2384
C2385
C2386
C2387
C2388
C2389
C2390
C2391
C2392
C2393
C2394
C2395
C2396
C2397
C2398
C2399
C2400
C2401
C2402
C2403
C2404
C2405
C2406
C2407
C2408
C2409
C2410
C2411
C2412
C2413
C2414
C2415
C2416
C2417
C2418
C2419
C2420
C2421
C2422
C2423
C2424
C2425
C2426
C2427
C2428
C2429
C2430
C2431
C2432
C2433
C2434
C2435
C2436
C2437
C2438
C2439
C2440
C2441
C2442
C2443
C2444
C2445
C2446
C2447
C2448
C2449
C2450
C2451
C2452
C2453
C2454
C2455
C2456
C2457
C2458
C2459
C2460
C2461
C2462
C2463
C2464
C2465
C2466
C2467
C2468
C2469
C2470
C2471
C2472
C2473
C2474
C2475
C2476
C2477
C2478
C2479
C2480
C2481
C2482
C2483
C2484
C2485
C2486
C2487
C2488
C2489
C2490
C2491
C2492
C2493
C2494
C2495
C2496
C2497
C2498
C2499
C2500
C2501
C2502
C2503
C2504
C2505
C2506
C2507
C2508
C2509
C2510
C2511
C2512
C2513
C2514
C2515
C2516
C2517
C2518
C2519
C2520
C2521
C2522
C2523
C2524
C2525
C2526
C2527
C2528
C2529
C2530
C2531
C2532
C2533
C2534
C2535
C2536
C2537
C2538
C2539
C2540
C2541
C2542
C2543
C2544
C2545
C2546
C2547
C2548
C2549
C2550
C2551
C2552
C2553
C2554
C2555
C2556
C2557
C2558
C2559
C2560
C2561
C2562
C2563
C2564
C2565
C2566
C2567
C2568
C2569
C2570
C2571
C2572
C2573
C2574
C2575
C2576
C2577
C2578
C2579
C2580
C2581
C2582
C2583
C2584
C2585
C2586
C2587
C2588
C2589
C2590
C2591
C2592
C2593
C2594
C2595
C2596
C2597
C2598
C2599
C2600
C2601
C2602
C2603
C2604
C2605
C2606
C2607
C2608
C2609
C2610
C2611
C2612
C2613
C2614
C2615
C2616
C2617
C2618
C2619
C2620
C2621
C2622
C2623
C2624
C2625
C2626
C2627
C2628
C2629
C2630
C2631
C2632
C2633
C2634
C2635
C2636
C2637
C2638
C2639
C2640
C2641
C2642
C2643
C2644
C2645
C2646
C2647
C2648
C2649
C2650
C2651
C2652
C2653
C2654
C2655
C2656
C2657
C2658
C2659
C2660
C2661
C2662
C2663
C2664
C2665
C2666
C2667
C2668
C2669
C2670
C2671
C2672
C2673
C2674
C2675
C2676
C2677
C2678
C2679
C2680
C2681
C2682
C2683
C2684
C2685
C2686
C2687
C2688
C2689
C2690
C2691
C2692
C2693
C2694
C2695
C2696
C2697
C2698
C2699
C2700
C2701
C2702
C2703
C2704
C2705
C2706
C2707
C2708
C2709
C2710
C2711
C2712
C2713
C2714
C2715
C2716
C2717
C2718
C2719
C2720
C2721
C2722
C2723
C2724
C2725
C2726
C2727
C2728
C2729
C2730
C2731
C2732
C2733
C2734
C2735
C2736
C2737
C2738
C2739
C2740
C2741
C2742
C2743
C2744
C2745
C2746
C2747
C2748
C2749
C2750
C2751
C2752
C2753
C2754
C2755
C2756
C2757
C2758
C2759
C2760
C2761
C2762
C2763
C2764
C2765
C2766
C2767
C2768
C2769
C2770
C2771
C2772
C2773
C2774
C2775
C2776
C2777
C2778
C2779
C2780
C2781
C2782
C2783
C2784
C2785
C2786
C2787
C2788
C2789
C2790
C2791
C2792
C2793
C2794
C2795
C2796
C2797
C2798
C2799
C2800
C2801
C2802
C2803
C2804
C2805
C2806
C2807
C2808
C2809
C2810
C2811
C2812
C2813
C2814
C2815
C2816
C2817
C2818
C2819
C2820
C2821
C2822
C2823
C2824
C2825
C2826
C2827
C2828
C2829
C2830
C2831
C2832
C2833
C2834
C2835
C2836
C2837
C2838
C2839
C2840
C2841
C2842
C2843
C2844
C2845
C2846
C2847
C2848
C2849
C2850
C2851
C2852
C2853
C2854
C2855
C2856
C2857
C2858
C2859
C2860
C2861
C2862
C2863
C2864
C2865
C2866
C2867
C2868
C2869
C2870
C2871
C2872
C2873
C2874
C2875
C2876
C2877
C2878
C2879
C2880
C2881
C2882
C2883
C2884
C2885
C2886
C2887
C2888
C2889
C2890
C2891
C2892
C2893
C2894
C2895
C2896
C2897
C2898
C2899
C2900
C2901
C2902
C2903
C2904
C2905
C2906
C2907
C2908
C2909
C2910
C2911
C2912
C2913
C2914
C2915
C2916
C2917
C2918
C2919
C2920
C2921
C2922
C2923
C2924
C2925
C2926
C2927
C2928
C2929
C2930
C2931
C2932
C2933
C2934
C2935
C2936
C2937
C2938
C2939
C2940
C2941
C2942
C2943
C2944
C2945
C2946
C2947
C2948
C2949
C2950
C2951
C2952
C2953
C2954
C2955
C2956
C2957
C2958
C2959
C2960
C2961
C2962
C2963
C2964
C2965
C2966
C2967
C2968
C2969
C2970
C2971
C2972
C2973
C2974
C2975
C2976
C2977
C2978
C2979
C2980
C2981
C2982
C2983
C2984
C2985
C2986
C2987
C2988
C2989
C2990
C2991
C2992
C2993
C2994
C2995
C2996
C2997
C2998
C2999
C3000
C3001
C3002
C3003
C3004
C3005
C3006
C3007
C3008
C3009
C3010
C3011
C3012
C3013
C3014
C3015
C3016
C3017
C3018
C3019
C3020
C3021
C3022
C3023
C3024
C3025
C3026
C3027
C3028
C3029
C3030
C3031
C3032
C3033
C3034
C3035
C3036
C3037
C3038
C3039
C3040
C3041
C3042
C3043
C3044
C3045
C3046
C3047
C3048
C3049
C3050
C3051
C3052
C3053
C3054
C3055
C3056
C3057
C3058
C3059
C3060
C3061
C3062
C3063
C3064
C3065
C3066
C3067
C3068
C3069
C3070
C3071
C3072
C3073
C3074
C3075
C3076
C3077
C3078
C3079
C3080
C3081
C3082
C3083
C3084
C3085
C3086
C3087
C3088
C3089
C3090
C3091
C3092
C3093
C3094
C3095
C3096
C3097
C3098
C3099
C3100
C3101
C3102
C3103
C3104
C3105
C3106
C3107
C3108
C3109
C3110
C3111
C3112
C3113
C3114
C3115
C3116
C3117
C3118
C3119
C3120
C3121
C3122
C3123
C3124
C3125
C3126
C3127
C3128
C3129
C3130
C3131
C3132
C3133
C3134
C3135
C3136
C3137
C3138
C3139
C3140
C3141
C3142
C3143
C3144
C3145
C3146
C3147
C3148
C3149
C3150
C3151
C3152
C3153
C3154
C3155
C3156
C3157
C3158
C3159
C3160
C3161
C3162
C3163
C3164
C3165
C3166
C3167
C3168
C3169
C3170
C3171
C3172
C3173
C3174
C3175
C3176
C3177
C3178
C3179
C3180
C3181
C3182
C3183
C3184
C3185
C3186
C3187
C3188
C3189
C3190
C3191
C3192
C3193
C3194
C3195
C3196
C3197
C3198
C3199
C3200
C3201
C3202
C3203
C3204
C3205
C3206
C3207
C3208
C3209
C3210
C3211
C3212
C3213
C3214
C3215
C3216
C3217
C3218
C3219
C3220
C3221
C3222
C3223
C3224
C3225
C3226
C3227
C3228
C3229
C3230
C3231
C3232
C3233
C3234
C3235
C3236
C3237
C3238
C3239
C3240
C3241
C3242
C3243
C3244
C3245
C3246
C3247
C3248
C3249
C3250
C3251
C3252
C3253
C3254
C3255
C3256
C3257
C3258
C3259
C3260
C3261
C3262
C3263
C3264
C3265
C3266
C3267
C3268
C3269
C3270
C3271
C3272
C3273
C3274
C3275
C3276
C3277
C3278
C3279
C3280
C3281
C3282
C3283
C3284
C3285
C3286
C3287
C3288
C3289
C3290
C3291
C3292
C3293
C3294
C3295
C3296
C3297
C3298
C3299
C3300
C3301
C3302
C3303
C3304
C3305
C3306
C3307
C3308
C3309
C3310
C3311
C3312
C3313
C3314
C3315
C3316
C3317
C3318
C3319
C3320
C3321
C3322
C3323
C3324
C3325
C3326
C3327
C3328
C3329
C3330
C3331
C3332
C3333
C3334
C3335
C3336
C3337
C3338
C3339
C3340
C3341
C3342
C3343
C3344
C3345
C3346
C3347
C3348
C3349
C3350
C3351
C3352
C3353
C3354
C3355
C3356
C3357
C3358
C3359
C3360
C3361
C3362
C3363
C3364
C3365
C3366
C3367
C3368
C3369
C3370
C3371
C3372
C3373
C3374
C3375
C3376
C3377
C3378
C3379
C3380
C3381
C3382
C3383
C3384
C3385
C3386
C3387
C3388
C3389
C3390
C3391
C3392
C3393
C3394
C3395
C3396
C3397
C3398
C3399
C3400
C3401
C3402
C3403
C3404
C3405
C3406
C3407
C3408
C3409
C3410
C3411
C3412
C3413
C3414
C3415
C3416
C3417
C3418
C3419
C3420
C3421
C3422
C3423
C3424
C3425
C3426
C3427
C3428
C3429
C3430
C3431
C3432
C3433
C3434
C3435
C3436
C3437
C3438
C3439
C3440
C3441
C3442
C3443
C3444
C3445
C3446
C3447
C3448
C3449
C3450
C3451
C3452
C3453
C3454
C3455
C3456
C3457
C3458
C3459
C3460
C3461
C3462
C3463
C3464
C3465
C3466
C3467
C3468
C3469
C3470
C3471
C3472
C3473
C3474
C3475
C3476
C3477
C3478
C3479
C3480
C3481
C3482
C3483
C3484
C3485
C3486
C3487
C3488
C3489
C3490
C3491
C3492
C3493
C3494
C3495
C3496
C3497
C3498
C3499
C3500
C3501
C3502
C3503
C3504
C3505
C3506
C3507
C3508
C3509
C3510
C3511
C3512
C3513
C3514
C3515
C3516
C3517
C3518
C3519
C3520
C3521
C3522
C3523
C3524
C3525
C3526
C3527
C3528
C3529
C3530
C3531
C3532
C3533
C3534
C3535
C3536
C3537
C3538
C3539
C3540
C3541
C3542
C3543
C3544
C3545
C3546
C3547
C3548
C3549
C3550
C3551
C3552
C3553
C3554
C3555
C3556
C3557
C3558
C3559
C3560
C3561
C3562
C3563
C3564
C3565
C3566
C3567
C3568
C3569
C3570
C3571
C3572
C3573
C3574
C3575
C3576
C3577
C3578
C3579
C3580
C3581
C3582
C3583
C3584
C3585
C3586
C3587
C3588
C3589
C3590
C3591
C3592
C3593
C3594
C3595
C3596
C3597
C3598
C3599
C3600
C3601
C3602
C3603
C3604
C3605
C3606
C3607
C3608
C3609
C3610
C3611
C3612
C3613
C3614
C3615
C3616
C3617
C3618
C3619
C3620
C3621
C3622
C3623
C3624
C3625
C3626
C3627
C3628
C3629
C3630
C3631
C3632
C3633
C3634
C3635
C3636
C3637
C3638
C3639
C3640
C3641
C3642
C3643
C3644
C3645
C3646
C3647
C3648
C3649
C3650
C3651
C3652
C3653
C3654
C3655
C3656
C3657
C3658
C3659
C3660
C3661
C3662
C3663
C3664
C3665
C3666
C3667
C3668
C3669
C3670
C3671
C3672
C3673
C3674
C3675
C3676
C3677
C3678
C3679
C3680
C3681
C3682
C3683
C3684
C3685
C3686
C3687
C3688
C3689
C3690
C3691
C3692
C3693
C3694
C3695
C3696
C3697
C3698
C3699
C3700
C3701
C3702
C3703
C3704
C3705
C3706
C3707
C3708
C3709
C3710
C3711
C3712
C3713
C3714
C3715
C3716
C3717
C3718
C3719
C3720
C3721
C3722
C3723
C3724
C3725
C3726
C3727
C3728
C3729
C3730
C3731
C3732
C3733
C3734
C3735
C3736
C3737
C3738
C3739
C3740
C3741
C3742
C3743
C3744
C3745
C3746
C3747
C3748
C3749
C3750
C3751
C3752
C3753
C3754
C3755
C3756
C3757
C3758
C3759
C3760
C3761
C3762
C3763
C3764
C3765
C3766
C3767
C3768
C3769
C3770
C3771
C3772
C3773
C3774
C3775
C3776
C3777
C3778
C3779
C3780
C3781
C3782
C3783
C3784
C3785
C3786
C3787
C3788
C3789
C3790
C3791
C3792
C3793
C3794
C3795
C3796
C3797
C3798
C3799
C3800
C3801
C3802
C3803
C3804
C3805
C3806
C3807
C3808
C3809
C3810
C3811
C3812
C3813
C3814
C3815
C3816
C3817
C3818
C3819
C3820
C3821
C3822
C3823
C3824
C3825
C3826
C3827
C3828
C3829
C3830
C3831
C3832
C3833
C3834
C3835
C3836
C3837
C3838
C3839
C3840
C3841
C3842
C3843
C3844
C3845
C3846
C3847
C3848
C3849
C3850
C3851
C3852
C3853
C3854
C3855
C3856
C3857
C3858
C3859
C3860
C3861
C3862
C3863
C3864
C3865
C3866
C3867
C3868
C3869
C3870
C3871
C3872
C3873
C3874
C3875
C3876
C3877
C3878
C3879
C3880
C3881
C3882
C3883
C3884
C3885
C3886
C3887
C3888
C3889
C3890
C3891
C3892
C3893
C3894
C3895
C3896
C3897
C3898
C3899
C3900
C3901
C3902
C3903
C3904
C3905
C3906
C3907
C3908
C3909
C3910
C3911
C3912
C3913
C3914
C3915
C3916
C3917
C3918
C3919
C3920
C3921
C3922
C3923
C3924
C3925
C3926
C3927
C3928
C3929
C3930
C3931
C3932
C3933
C3934
C3935
C3936
C3937
C3938
C3939
C3940
C3941
C3942
C3943
C3944
C3945
C3946
C3947
C3948
C3949
C3950
C3951
C3952
C3953
C3954
C3955
C3956
C3957
C3958
C3959
C3960
C3961
C3962
C3963
C3964
C3965
C3966
C3967
C3968
C3969
C3970
C3971
C3972
C3973
C3974
C3975
C3976
C3977
C3978
C3979
C3980
C3981
C3982
C3983
C3984
C3985
C3986
C3987
C3988
C3989
C3990
C3991
C3992
C3993
C3994
C3995
C3996
C3997
C3998
C3999
C4000
C4001
C4002
C4003
C4004
C4005
C4006
C4007
C4008
C4009
C4010
C4011
C4012
C4013
C4014
C4015
C4016
C4017
C4018
C4019
C4020
C4021
C4022
C4023
C4024
C4025
C4026
C4027
C4028
C4029
C4030
C4031
C4032
C4033
C4034
C4035
C4036
C4037
C4038
C4039
C4040
C4041
C4042
C4043
C4044
C4045
C4046
C4047
C4048
C4049
C4050
C4051
C4052
C4053
C4054
C4055
C4056
C4057
C4058
C4059
C4060
C4061
C4062
C4063
C4064
C4065
C4066
C4067
C4068
C4069
C4070
C4071
C4072
C4073
C4074
C4075
C4076
C4077
C4078
C4079
C4080
C4081
C4082
C4083
C4084
C4085
C4086
C4087
C4088
C4089
C4090
C4091
C4092
C4093
C4094
C4095
C4096
C4097
C4098
C4099
C4100
C4101
C4102
C4103
C4104
C4105
C4106
C4107
C4108
C4109
C4110
C4111
C4112
C4113
C4114
C4115
C4116
C4117
C4118
C4119
C4120
C4121
C4122
C4123
C4124
C4125
C4126
C4127
C4128
C4129
C4130
C4131
C4132
C4133
C4134
C4135
C4136
C4137
C4138
C4139
C4140
C4141
C4142
C4143
C4144
C4145
C4146
C4147
C4148
C4149
C4150
C4151
C4152
C4153
C4154
C4155
C4156
C4157
C4158
C4159
C4160
C4161
C4162
C4163
C4164
C4165
C4166
C4167
C4168
C4169
C4170
C4171
C4172
C4173
C4174
C4175
C4176
C4177
C4178
C4179
C4180
C4181
C4182
C4183
C4184
C4185
C4186
C4187
C4188
C4189
C4190
C4191
C4192
C4193
C4194
C4195
C4196
C4197
C4198
C4199
C4200
C4201
C4202
C

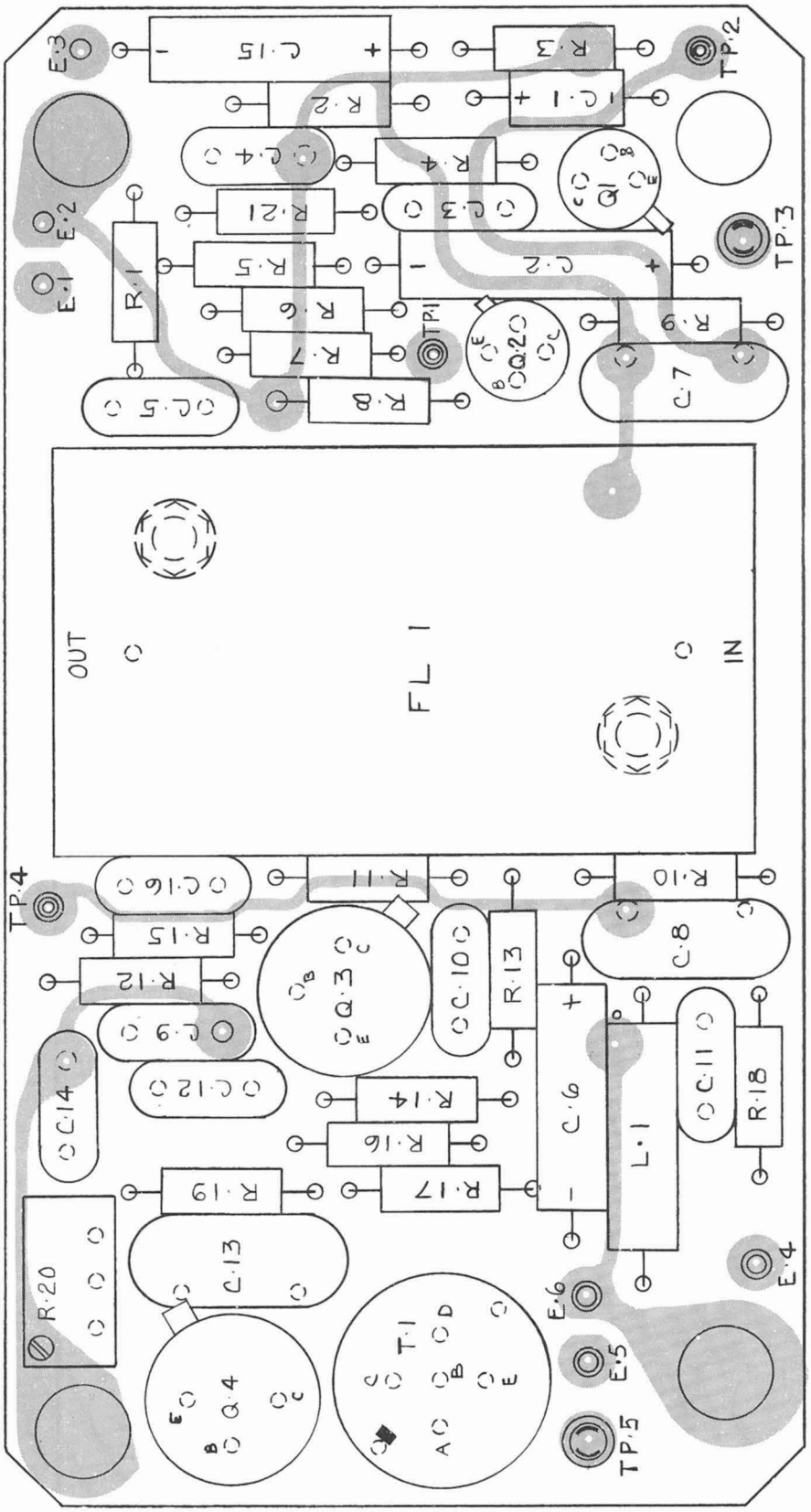

Figure 5-94F. 7.1 MC Mixer (Top View), Component and Test Point Location (Used on R-1051B/URR)

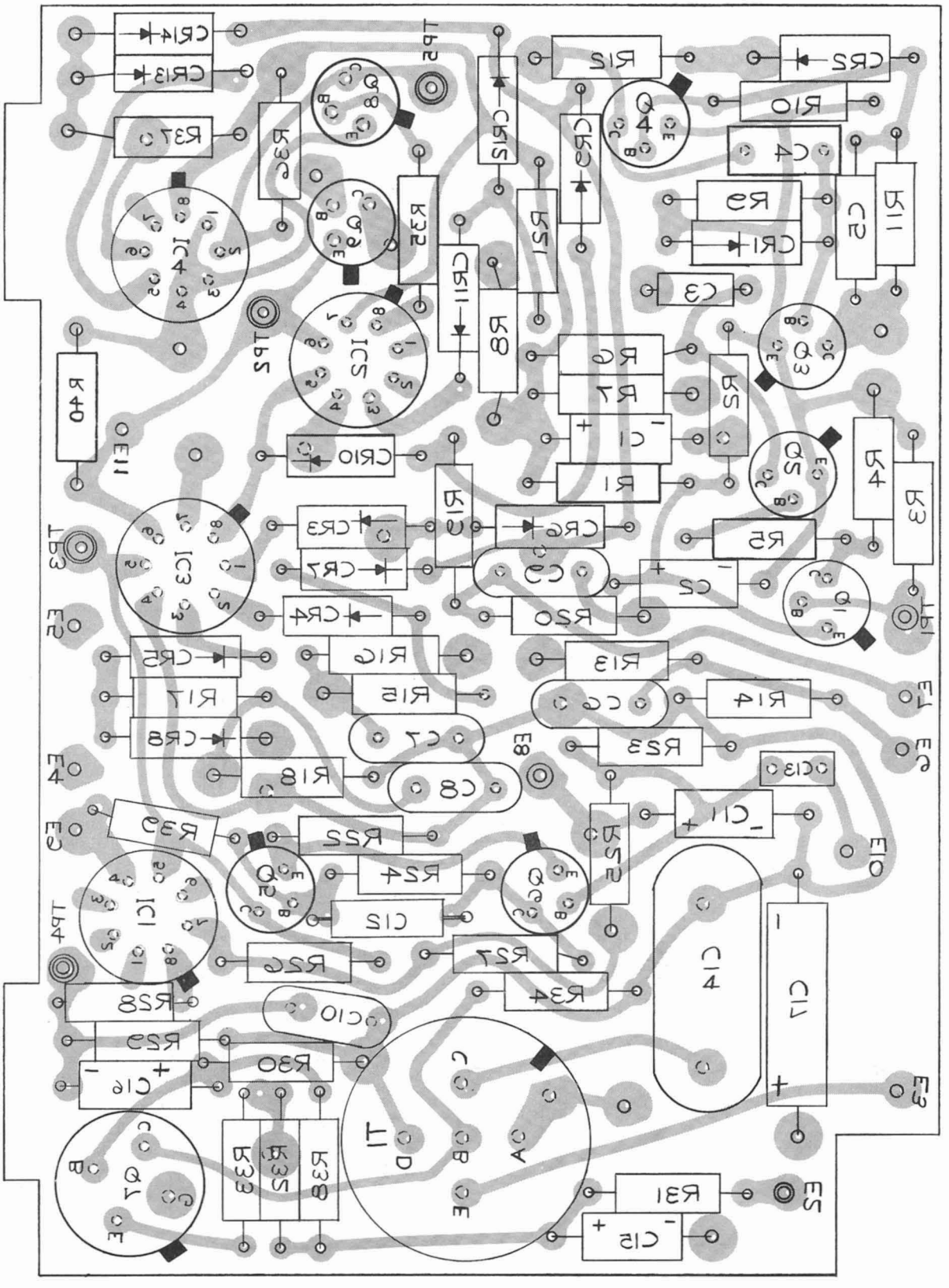

Figure 5-94G. Preset Counter (Foil Side Up), Component and Test Point Location

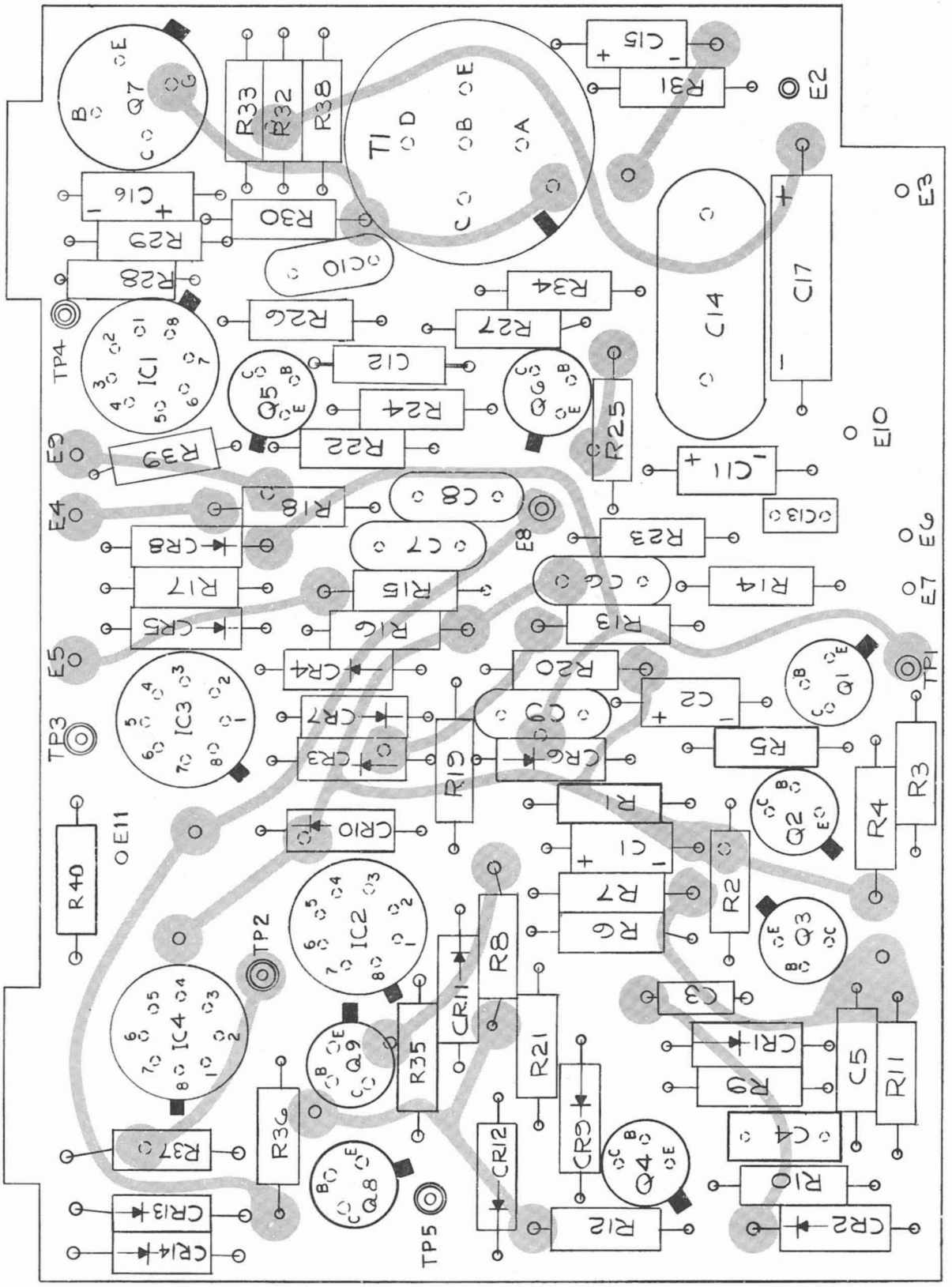

Figure 5-94H. Preset Counter (Top View), Component and Test Point Location (Used on R-1051B/URR)

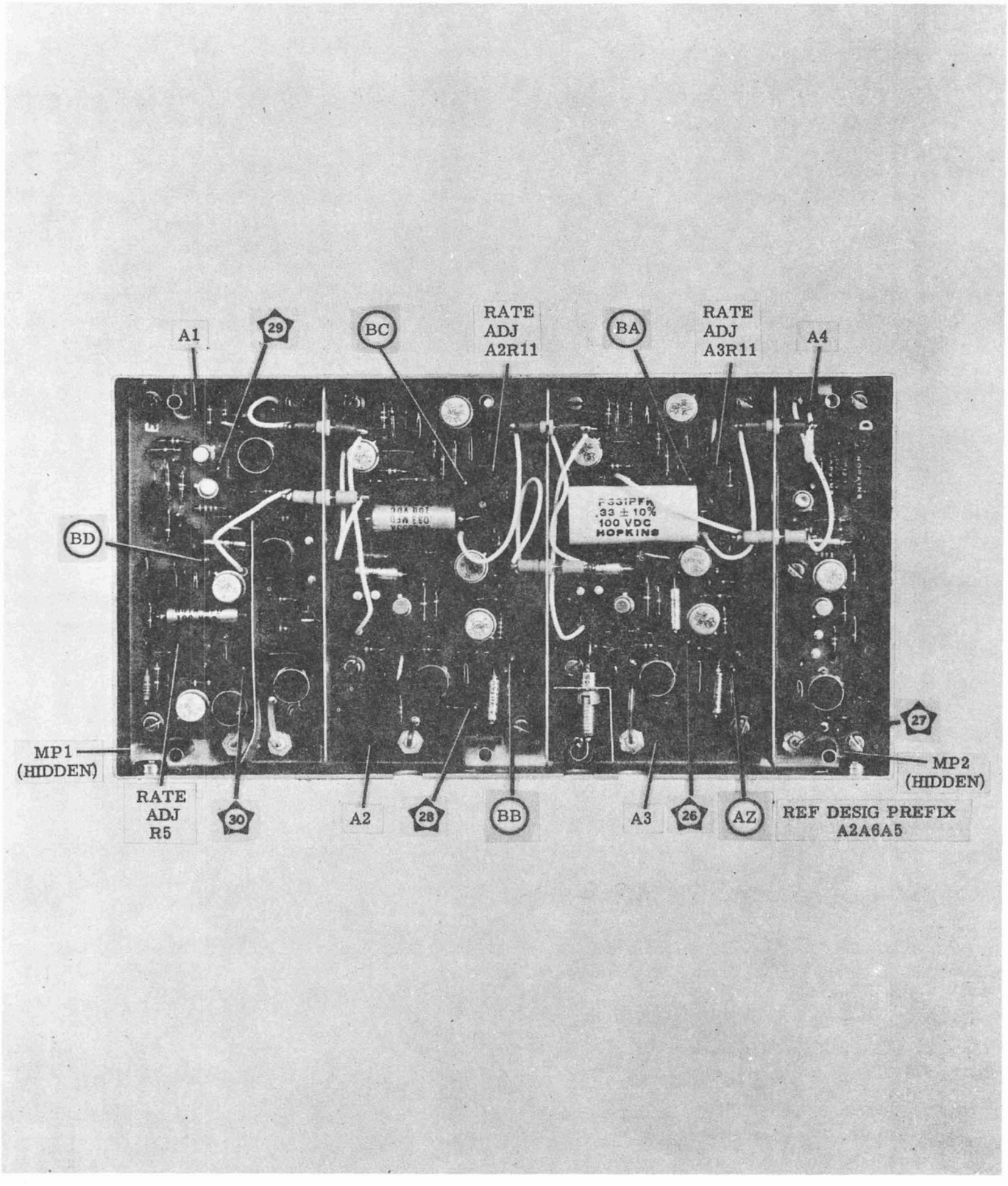

Figure 5-95. Spectrum Generator Electronic Subassembly, Component Location

PARTS LOCATION INDEX

REF DESIG	LOC	REF DESIG	LOC	REF DESIG	LOC
C1	7D	E1	11D	R11	8F
C2	6E	E6	6A	R12	9F
C3	2E	J3	2D	R13	7E
C4	4D	J6	2C	R14	8F
C5	6E	L1	9D	R15	9E
C6	5E	L2	3D	R16	7E
C7	7F	L5	6C	R17	9F
C8	6F	Q1	3E	R18	9E
C9	8E	Q2	4E	R19	8D
C10	8D	Q3	6D	R20	7D
C11	7F	Q4	8E	R21	9C
C12	7D	Q5	8E	R22	5C
C13	9D	Q6	8C	R23	7C
C14	8C	R1	6F	R24	6C
C15	9C	R2	3F	R25	5C
C16	7C	R3	3E	T1	8D
C17	6C	R4	5F	T2	3C
C18	5C	R5	4E	TP1	4D
C19	4C	R6	4F	TP2	4E
CR1	3F	R7	6E	TP3	7E
CR2	3F	R8	6E	TP4	6E
CR3	6F	R9	6E	TP5	8F
CR4	7C	R10	7F	TP6	8E

NOTE:
REF. DESIG. PREFIX A2A6A5.

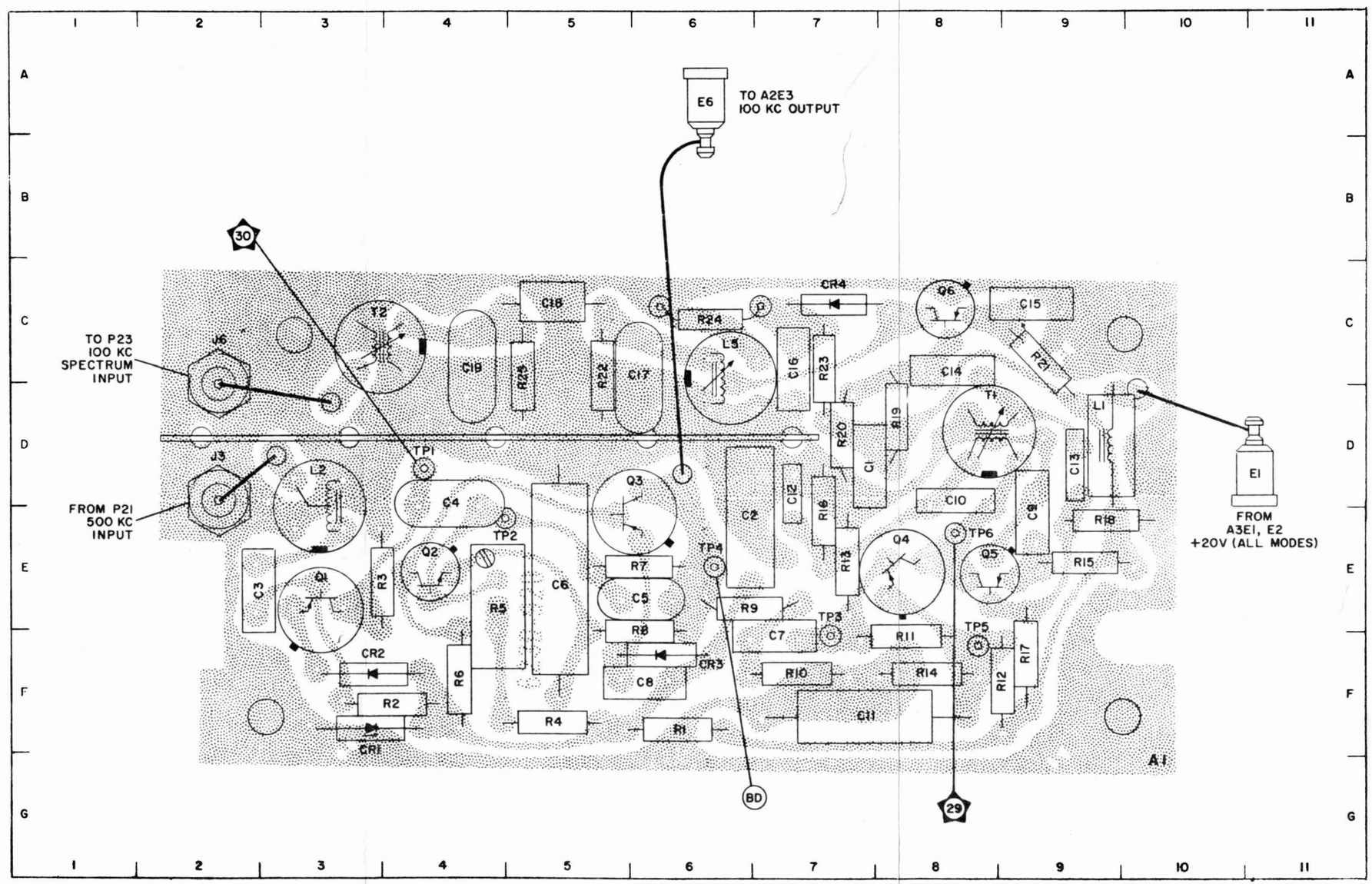

Figure 5-96. 100 KC Spectrum Generator (Foil Side Up), Component and Test Point Location

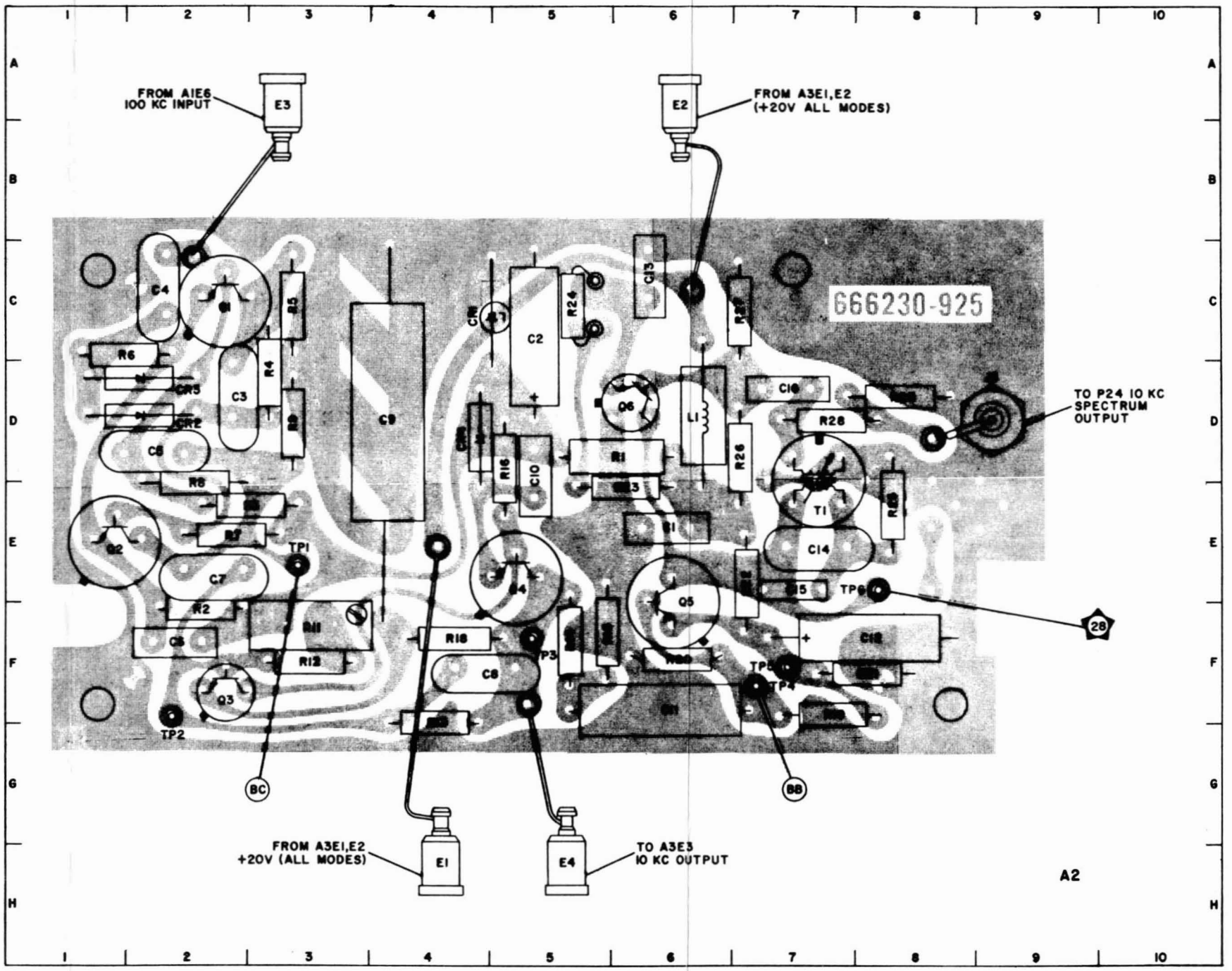

PARTS LOCATION INDEX

REF DESIC	LOC	REF DESIG	LOC	REF DESIG	LOC	REF DESIG	LOC	REF DESIG	LOC	REF DESIG	LOC	REF DESIG	LOC	REF DESIG	LOC
C1	6E	C9	4D	CR1	5C	J5	9D	R1	6D	R9	3D	R19	7F	R27	7C	TP5	7F
C2	5C	C10	5D	CR2	2D	L1	6D	R2	2F	R11	3F	R20	6F	R28	7D	TP6	8E
C3	2D	C11	6F	CR3	2D	Q1	2C	R3	3E	R12	3F	R21	8F	R29	8D		
C4	2C	C12	8F	CR4	4D	Q2	1E	R4	3D	R13	4F	R22	7E	T1	7E		
C5	2D	C13	6C	E1	4H	Q3	2F	R5	3C	R14	5F	R23	6E	TP1	3E		
C6	2F	C14	7E	E2	6A	Q4	5E	R6	1C	R15	5F	R24	5C	TP2	2F		
C7	2E	C15	7E	E3	3A	Q5	6F	R7	2E	R16	5D	R25	8E	TP3	5F		
C8	4F	C16	7D	E4	5H	Q6	6D	R8	2E	R18	4F	R26	7D	TP4	7F		

NOTE:
REF. DESIG. PREFIX A2A6A5.

Figure 5-97. 10 KC Spectrum Generator (Foil Side Up), Component and Test Point Location

NOTE:
REF. DESIG. PREFIX A2A6A5.

PARTS LOCATION INDEX

REF DESIG	LOC	REF DESIG	LOC
C1	6E	R2	2E
C2	5C	R3	2E
C3	2D	R4	3C
C4	2C	R5	3B
C5	2D	R6	1C
C6	2F	R7	2E
C7	2E	R8	2D
C8	4F	R9	3D
C9	4D	R10	3C
C10	5D	R11	3E
C11	6F	R12	3F
C12	8F	R13	4F
C13	6C	R14	5F
C14	7E	R15	5F
C15	8C	R16	5D
C16	7D	R17	3F
C17	9E	R18	4F
CR1	4C	R19	7F
CR2	2D	R20	6F
CR3	2C	R21	8F
CR4	4F	R22	7E
CR5	4D	R23	6D
E1	3H	R24	5C
E2	6A	R25	8D
E3	2A	R26	7D
E4	2A	R27	7C
J4	9D	T1	7D
L1	6D	TP1	3E
L2	8D	TP2	2F
Q1	2C	TP3	5F
Q2	1E	TP4	7F
Q3	2F	TP5	7F
Q4	5E	TP6	6E
Q5	6E		
Q6	6D		
R1	6D		

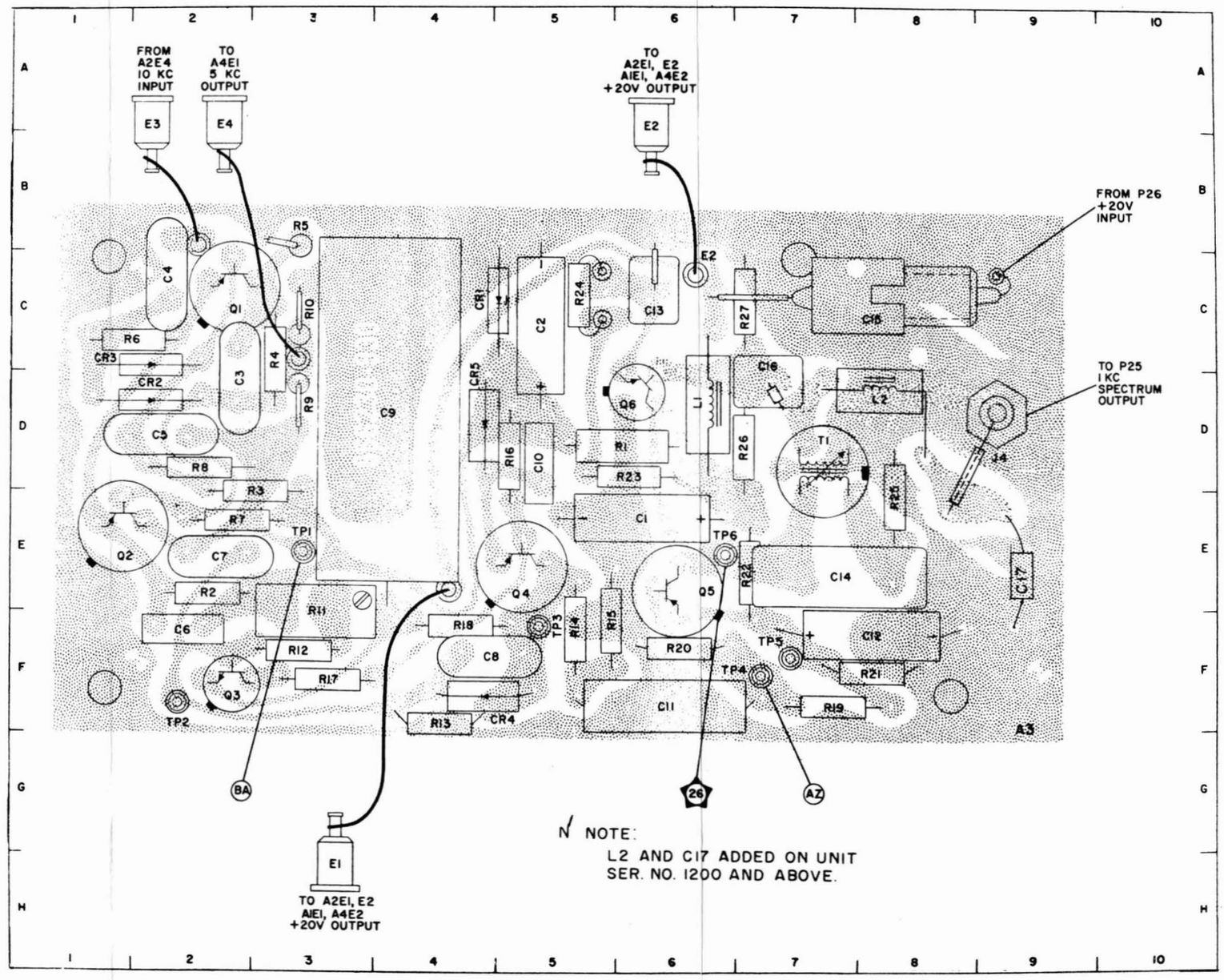

Figure 5-98. 1 KC Spectrum Generator (Foil Side Up), Component and Test Point Location

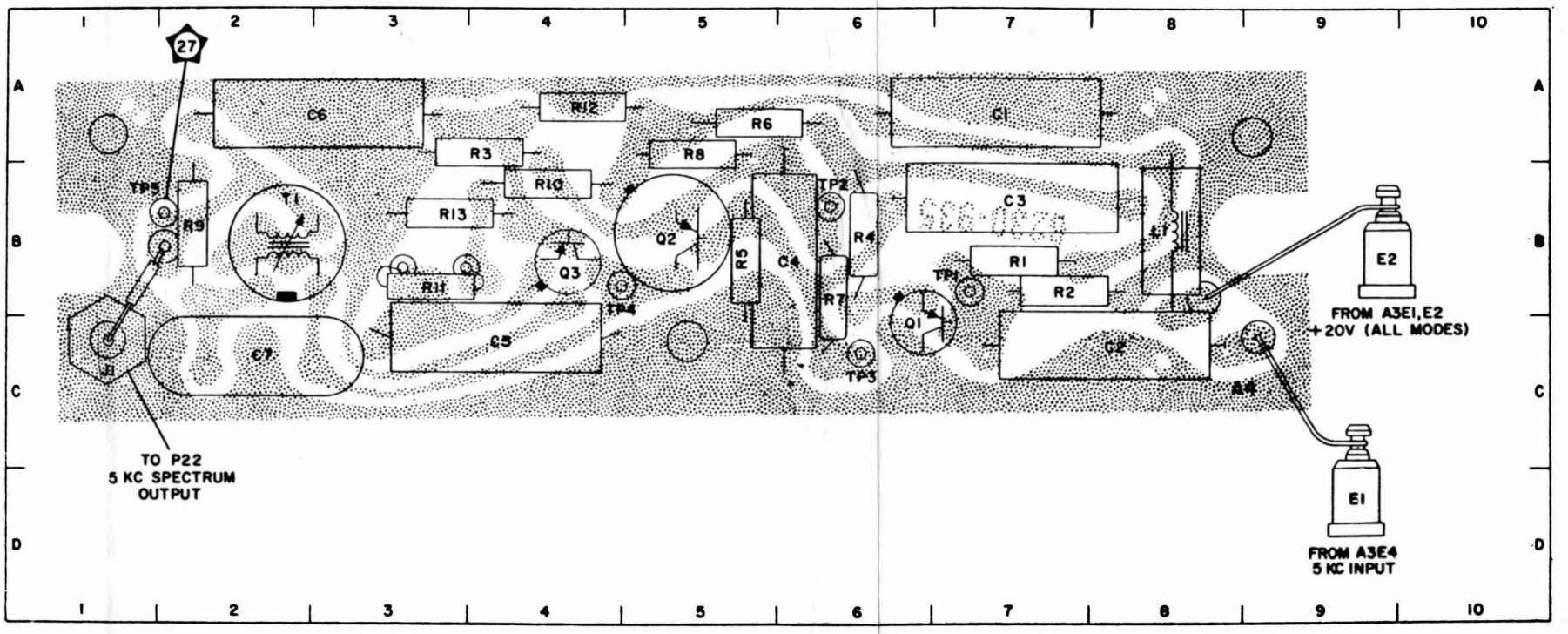

PARTS LOCATION INDEX

REF DESIG	LOC	REF DESIG	LOC
C1	7A	R4	6B
C2	8C	R5	5B
C3	7B	R6	5A
C4	6B	R7	6B
C5	4C	R8	5A
C6	2A	R9	2B
C7	2C	R10	4B
E1	9D	R11	3B
E2	9B	R12	4A
J1	1C	R13	3B
L1	8B	T1	2B
Q1	6C	TP1	7B
Q2	5B	TP2	6B
Q3	4B	TP3	6C
R1	7B	TP4	4B
R2	7B	TP5	2B
R3	4A		

NOTE:
REF. DESIG. PREFIX A2A6A5.

Figure 5-99. 5 KC Spectrum Generator (Foil Side Up), Component and Test Point Location

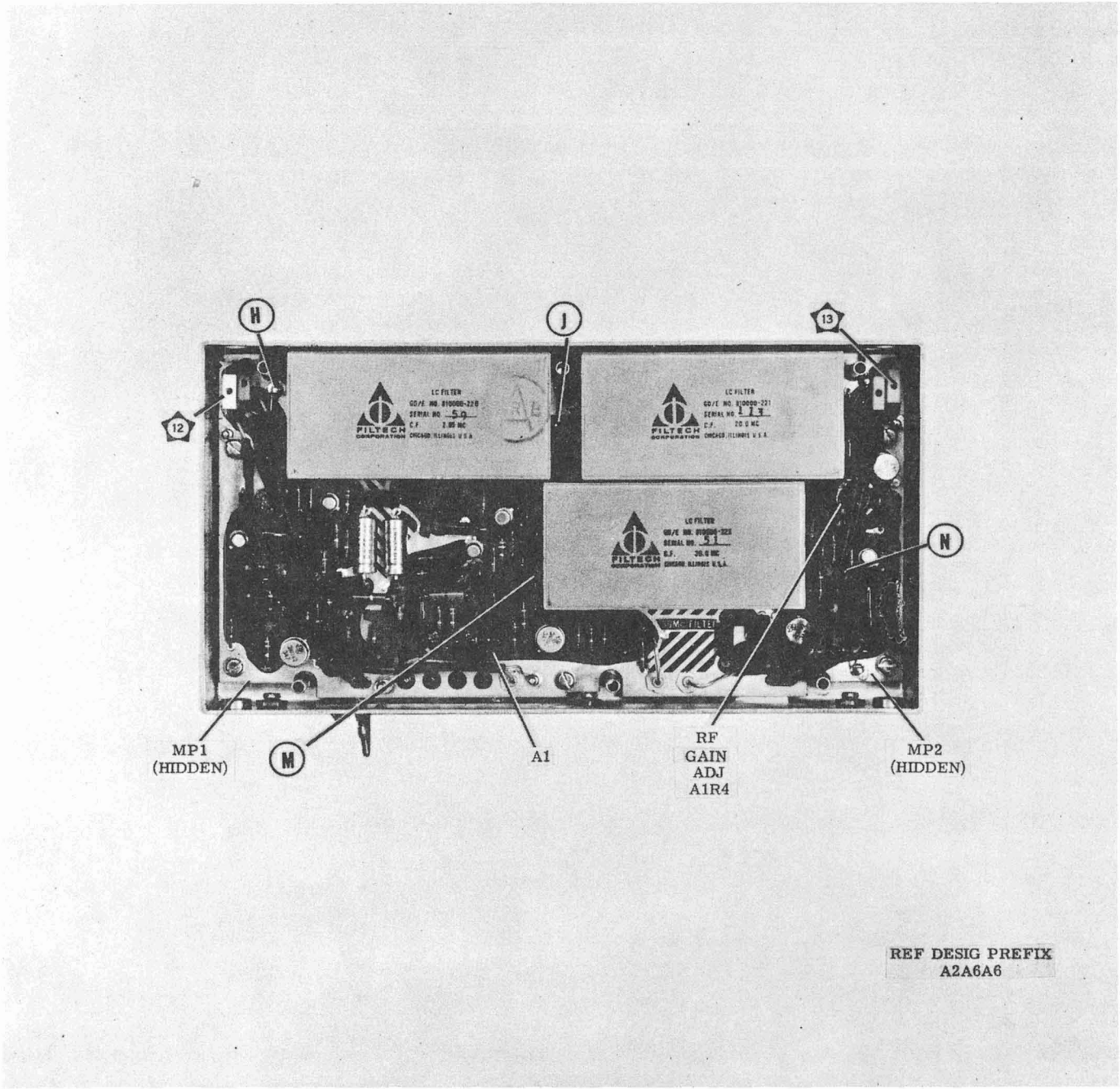

Figure 5-100. RF Translator Electronic Subassembly, Component Location

NOTE:
REF. DESIG. PREFIX A2A6A6.

PARTS LOCATION INDEX

REF DESIG	LOC	REF DESIG	LOC	REF DESIG	LOC
C1	6C	CR11	16H	R13	8H
C2	5E	E2	5C	R14	12H
C3	15E	E3	6H	R15	12H
C4	5H	E12	20C	R16	12H
C5	6F	E13	20C	R17	11H
C6	6H	E15	19C	R18	14H
C7	6H	E16	20D	R19	16G
C8	5H	E19	6I	R20	14H
C9	6E	E20	5C	R21	15H
C10	7G	E21	6B	R22	15H
C11	13E	FL1	9C	R23	18I
C12	13H	FL2	10F	R24	19I
C13	7G	FL3	16C	R25	18H
C14	14H	J1	10I	R26	18H
C15	12D	J2	10I	R27	17G
C16	15E	J3	15I	R28	20H
C17	16I	J4	15I	R29	20E
C18	15H	J5	16I	R30	20F
C19	15G	J6	16I	R31	19H
C20	16H	J7	15I	R32	20G
C21	8I	L1	9H	R33	20G
C22	11H	L2	7F	R34	18E
C23	11H	L3	15F	R35	19C
C24	14G	L4	16E	R36	18E
C25	15I	L5	17E	R37	18G
C26	17I	L6	19H	R38	18F
C27	18I	L7	17I	R39	18F
C28	19G	L8	18H	R40	14E
C29	20H	L9	15G	R41	12C
C30	20G	P2A1	22E	R42	14E
C31	20G	P2A2	22C	R43	14F
C32	19F	P3A1	3C	R44	14H
C33	17F	P3A2	3B	R45	14G
C34	18G	P3A3	3H	R46	13F
C35	17H	Q1	5D	R47	13G
C36	16F	Q2	5G	R48	6F
C37	7E	Q3	15F	R49	7G
C38	16H	Q4	14E	R50	13H
C39	16F	Q5	18E	R51	16G
C40	19D	Q6	20F	R52	6C
C41	18F	Q7	19I	R53	11I
C42	14G	Q8	7H	R54	15H
C43	8H	Q9	13H	R55	8I
C45	13D	R1	6D	R56	17H
C46	19F	R2	5E	T1	19E
CR1	6F	R3	5E	TP1	6G
CR2	6G	R4	6E	TP2	13G
CR3	6F	R5	6F	TP3	13C
CR4	13F	R6	5H	TP4	19D
CR5	14F	R7	5H	TP5	5B
CR6	13D	R8	5G	TP6	5C
CR7	13G	R9	5G	TP7	20B
CR8	19E	R10	6I	TP8	20C
CR9	6C	R11	7H		
CR10	6D	R12	7I		

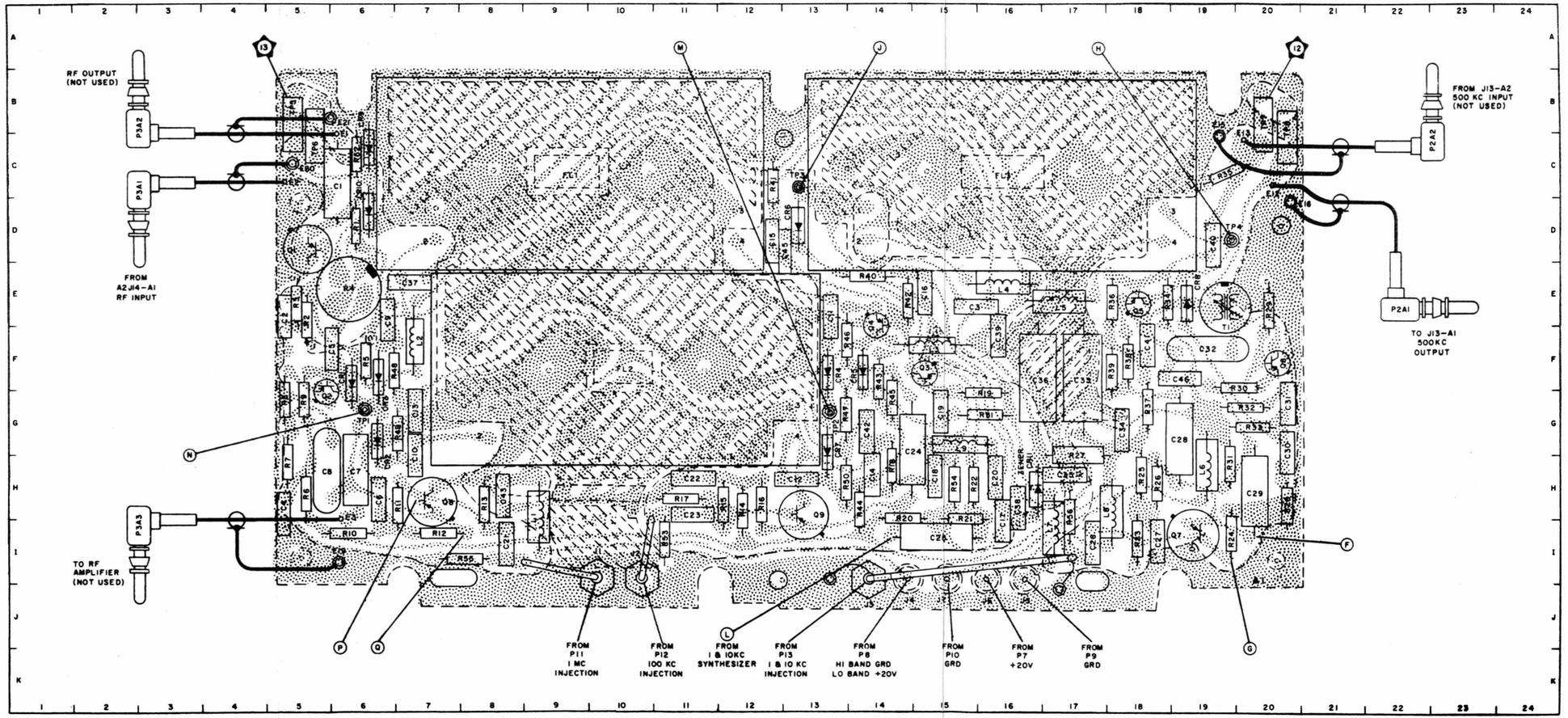

Figure 5-101. RF Translator (Foil Side Up), Component and Test Point Location

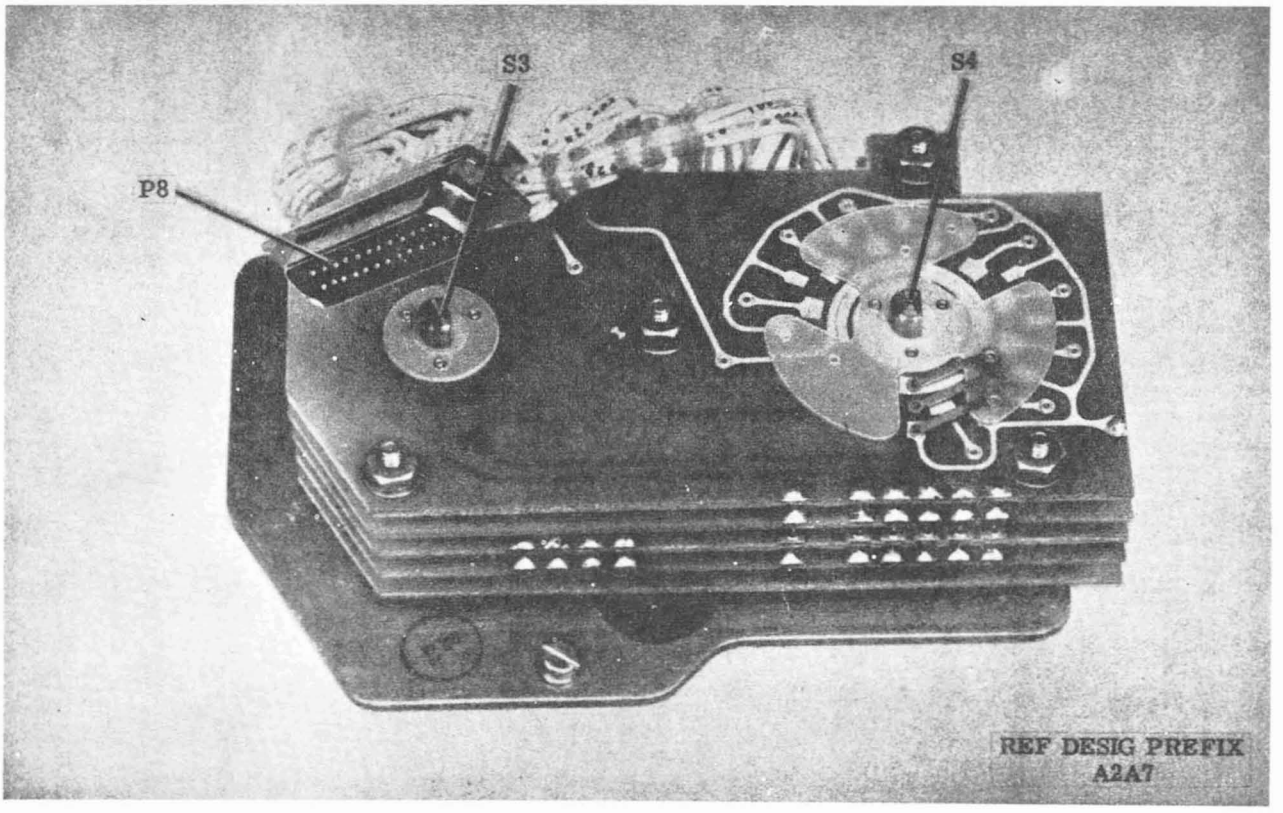

Figure 5-102. Code Generator Electronic Assembly, Component Location

SECTION 6

PARTS LIST

6-1. INTRODUCTION.

6-2. REFERENCE DESIGNATIONS.

6-3. The unit numbering method of assigning reference designations has been used to identify units, assemblies, subassemblies, and parts. This method has been expanded as much as necessary to adequately cover the various degrees of subdivision of the equipment. Examples of this unit numbering method and typical expansions of the same are illustrated by the following:

Example 1:

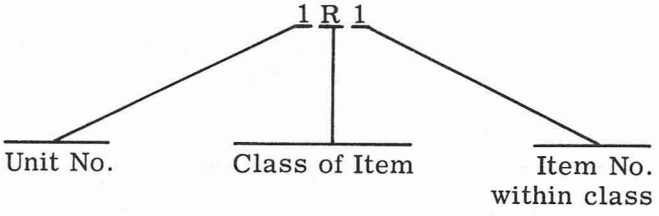

Read as: First (1) resistor (R) of first unit (1).

Example 2:

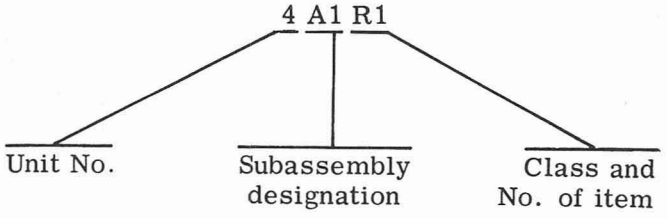

Read as: First (1) resistor (R) of first (1) subassembly (A) of fourth (4) unit.

Example 3:

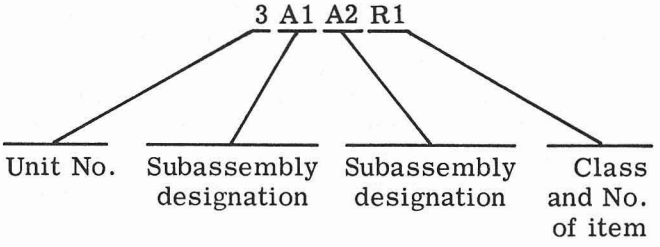

Read as: First (1) resistor (R) of second (2) subassembly (A) of first (1) subassembly (A) of third (3) unit.

6-4. REF DESIG PREFIX.

6-5. Partial reference designations are used on the equipment and illustrations. The partial reference designations consist of the class letter (s) and the identifying item number. The complete reference designations may be obtained by placing the proper prefix before the partial reference designations. Prefixes are provided on illustrations following the notation "REF DESIG PREFIX".

6-6. LIST OF UNITS.

6-7. This equipment is comprised of units as listed in Table 6-1.

6-8. MAINTENANCE PARTS LIST.

6-9. Table 6-2 lists all units and their maintenance parts. The units are listed in numerical sequence. Maintenance parts for each unit are listed alphabetically-numerically by class of part following the unit designation. Thus the parts for each unit are grouped together. Table 6-2 provides the following information: (1) the complete reference designation of each unit,

assembly, subassembly, or part, (2) reference to explanatory notes in paragraph 6-6, (3) noun name and brief description, and (4) identification of the illustration which pictorially locates the part.

6-10. Printed circuit boards, assembly boards, modules, etc., are listed first as individual items in the maintenance parts list. In addition, at the completion of a parts listing for each unit, the individual circuit board, assembly board, module, etc., is then broken down by components into separate parts listings. When there is a redundancy of such electronic assemblies in subsequent units, reference is made to the parts breakdown previously listed.

6-11. LIST OF MANUFACTURERS.

6-12. Table 6-3 lists the manufacturers of parts used in the equipment. The table includes the manufacturer's code used in table 6-2 to identify the manufacturers. The code is contained in Federal Supply Code for Manufacturers, H4-1.

6-13. STOCK NUMBER IDENTIFICATION.

6-14. Allowance Parts List (APL) issued by the Electronics Supply Office (ESO) include Federal Stock Numbers and Source Maintenance and Recoverability Codes. Therefore, reference should be made to the APL prepared for the equipment for stock numbering information.

6-15. NOTES.

6-16. Note Column. Parts variation within each article are identified by a Letter Symbol in the Notes Column. The absence of a Letter Symbol in the Notes Column indicates that the part is used on all articles covered by this Manual. The codes are assigned as follows:

Master Usable On Coding List

Usable On Code	Equipments
A, B	Units built under original contracts
C	Units built under current contract

TABLE 6-1. LIST OF UNITS

UNIT NO.	QTY	NAME OF UNIT	DESIGNATION	COLLOQUIAL NAME	PAGE
	1	Radio Receiver	R-1051/URR	Receiver	6-3
A1	1	Case Subassembly, Receiver			6-3
A1A1	1	Filter Box Subassembly			6-3
A2	1	Chassis, Receiver			6-3
A2A1	1	Mode Selector, Receiver			6-6
A2A2	2	Receiver Assembly, Intermediate Frequency			6-8
A2A3	Ref	Same as A2A2			6-13
A2A4	1	Amplifier, Radio Frequency			6-18
A2A5	1	Module Assembly, Frequency Standard			6-35
A2A6	1	Translator-Synthesizer Subassembly			6-40
A2A7	1	Code Generator			6-75
A2A8	1	Power Supply, Printed Board			6-75
A2A9	1	Antenna Cutout, Printed Circuit Board			6-76
A2A10	1	Panel Subassembly, Light			6-76
A2A11	1	500 CPS Control, Printed Circuit Board			6-76

6-20. SUPPLEMENTARY PARTS LIST FOR RADIO RECEIVER R-1051B/URR.

6-21. INTRODUCTION.

6-22. Table 6-1A is a Supplementary Parts List for Radio Receiver R-1051B/URR. Those parts not included in this table are listed in either table 6-1 or 6-0. Always refer to the Supplementary Parts Lists first; table 6-0 for the R-1051/URR and table 6-1A for the R-1051B/URR.

TABLE 6-1A. SUPPLEMENTARY PARTS LIST

RADIO RECEIVER R-1051B/URR

REF DESIG	NOTES	NAME AND DESCRIPTION	FIG. NO.
A2CR4		SAME AS A2CR1	5-15B
A2A1A1CR1		SEMICONDUCTOR DEVICE, DIODE - MIL TYPE 1N277	5-23
A2A1A1CR2		SAME AS A2A1A1CR1	5-23
A2A1A1CR3		SAME AS A2A1A1CR1	5-23
A2A1A1CR4		SAME AS A2A1A1CR1	5-23
A2A1A2CR1		SAME AS A2A1A1CR1	5-25
A2A1A3CR2		SEMICONDUCTOR DEVICE, DIODE - MIL TYPE 1N3064	5-26
A2A1A3CR3		SAME AS A2A1A3CR2	5-26
A2A2A1CR1		SAME AS A2A1A1CR1	5-28
A2A2A1CR2		SAME AS A2A1A1CR1	5-28
A2A2A1Q9		TRANSISTOR - MIL TYPE 2N652A	5-28
A2A2A2Q7		TRANSISTOR - MIL TYPE 2N2905A	5-31
A2A2A2Q8		TRANSISTOR - MIL TYPE 2N2905A	5-31
A2A2A3CR1		SAME AS A2A1A1CR1	5-29
A2A2A3R1		RESISTOR - MIL TYPE RC07GF120J	5-29
A2A2A3R3		SAME AS A2A2A3R1	5-29
A2A3A1CR1		SAME AS A2A1A1CR1	5-28
A2A3A1CR2		SAME AS A2A1A1CR1	5-28
A2A3A1Q9		SAME AS A2A2A1Q9	5-28
A2A3A2Q7		SAME AS A2A2A1Q9	5-31
A2A3A2Q8		SAME AS A2A2A1Q9	5-31
A2A3A3CR1		SAME AS A2A1A1CR1	5-29
A2A3A3R1		SAME AS A2A2A3R1	5-29
A2A3A3R3		SAME AS A2A2A3R1	5-29

TABLE 6-1A. SUPPLEMENTARY PARTS LIST (Continued)

RADIO RECEIVER R-1051B/URR

REF DESIG	NOTES	NAME AND DESCRIPTION	FIG. NO.
A2A5		FREQUENCY STANDARD, MFR 06845, PN 401399-0701	5-61A
A2A5A1		OSCILLATOR BOARD ASSEMBLY, MFR 14844, PN 5236-946B	5-61A
A2A5A1CR1		SAME AS A2A6A4A2CR4	5-64A
A2A5A1CR2		SEMICONDUCTOR DEVICE, DIODE — MIL TYPE JAN 1N914	5-64A
A2A5A1C1		CAPACITOR, FIXED, MICA, DIELECTRIC, 0.466 IN. × 0.374 IN. × 0.210 IN., 680 MMF, 300 VDC, P/M 5% MFR 84171, PN DM15-681J1CR	5-64A
A2A5A1C2		CAPACITOR, VARIABLE, DIELECTRIC, 750 VDC, MFR 14844, PN C5217-946	5-64A
A2A5A1C3		CAPACITOR, VARIABLE, CERAMIC, DIELECTRIC, 0.380 IN. × 0.275 IN., MFR 14844, PN B5559-946-2	5-64A
A2A5A1C4		CAPACITOR, FIXED, MICA, DIELECTRIC, 180 PF, P/M 5% 500 VDC, 0.330 IN. × 0.150 IN., MFR 84171, PN DM10-181J1CR	5-64A
A2A5A1C5		CAPACITOR, FIXED, MICA, DIELECTRIC, 220 PF, P/M 5% 500 VDC, 0.340 IN. × 0.160 IN., MFR 84171, PN DM10-221J1CR	5-64A
A2A5A1C6		CAPACITOR, FIXED, CERAMIC, DIELECTRIC, 0.156 IN. × 0.408 IN. DIA., 0.05 MFD, 20 VDC, +80% and -20%, MFR 71590, PN DA-486-001B	5-64A
A2A5A1C7		CAPACITOR — MIL TYPE CS13BD335M	5-64A
A2A5A1C8T		CAPACITOR — MIL TYPE CM04ED820J	5-64A
A2A5A1C9		SAME AS A2A5TB1C6	5-64A
A2A5A1C10		CAPACITOR, FIXED, CERAMIC, 0.500 IN. LG. × 0.170 IN. DIA., 0.01 UF, 200 VDC, P/M 10%, MFR 56289, PN 192P10392	5-64A
A2A5A1C11T		SAME AS A2A5A1C8	5-64A
A2A5A1C12		SAME AS A2A5A1C7	5-64A
A2A5A1Q1		SAME AS A2A6A4A1Q2	5-64A
A2A5A1Q2		SAME AS A2A6A4A1Q2	5-64A
A2A5A1Q3		SAME AS A2A6A4A1Q2	5-64A
A2A5A1Q4		SAME AS A2A6A4A1Q2	5-64A
A2A5A1Q5		SAME AS A2A6A4A1Q2	5-64A
A2A5A1Q6		TRANSISTOR — MIL TYPE JAN 2N2907	5-64A
A2A5A1Q7		SAME AS A2A8Q2	5-64A
A2A5A1R1		RESISTOR — MIL TYPE RC07GF124K	5-64A
A2A5A1R2		RESISTOR — MIL TYPE RL07S510J	5-64A
A2A5A1R3		RESISTOR — MIL TYPE RL07S102J	5-64A
A2A5A1R4		RESISTOR — MIL TYPE RC07GF823K	5-64A
A2A5A1R5		RESISTOR — MIL TYPE RC07GF153K	5-64A
A2A5A1R6		RESISTOR — MIL TYPE RC07GF470K	5-64A
A2A5A1R7		RESISTOR — MIL TYPE RC07GF152K	5-64A

TABLE 6-1A. SUPPLEMENTARY PARTS LIST (Continued)

RADIO RECEIVER R-1051B/URR

REF DESIG	NOTES	NAME AND DESCRIPTION	FIG. NO.
A2A5A1R8		RESISTOR — MIL TYPE RC07GF102K	5-64A
A2A5A1R9		RESISTOR — WIRE WOUND 820 OHMS, 1 W	5-64A
A2A5A1R10T		RESISTOR — MFR 14844, PN 239E8215	5-64A
A2A5A1R11		RESISTOR — MIL TYPE RC07GF103K	5-64A
A2A5A1R12		RESISTOR — MIL TYPE RC07GF271K	5-64A
A2A5A1R13		RESISTOR — MIL TYPE RL07S472J	5-64A
A2A5A1R14		RESISTOR — MIL TYPE RL07S472J	5-64A
A2A5A1R15		RESISTOR, VARIABLE, MFR 80294, PN 3067 P-1-102	5-64A
A2A5A1R16		RESISTOR — MIL TYPE RL07S432J	5-64A
A2A5A1R17		RESISTOR — MIL TYPE RC07GF123K	5-64A
A2A5A1R18		SAME AS A2A5A1R17	5-64A
A2A5A1R19		SAME AS A2A5A1R11	5-64A
A2A5A1R20		SAME AS A2A5A1R11	5-64A
A2A5A1R21		RESISTOR — MIL TYPE RC07GF222K	5-64A
A2A5A1R22		RESISTOR — MIL TYPE RC07GF331K	5-64A
A2A5A1R23T		RESISTOR — MIL TYPE RC07GF125K	5-64A
A2A5A1R24		SAME AS A2A51R21	5-64A
A2A5A1Y1		CRYSTAL UNIT, QUARTS (SPECIAL), 0.757 IN. × 0.352 IN., FREQUENCY 5.0000 MC, MFR 14844, PN B5556-946	5-64A
A2A5A2		MULTIPLIER AND DIVIDER P/C ASSEMBLY, MFR 14844, PN 5601-946	5-61A
A2A5A2CR1		SAME AS A2A5A1CR2	5-62A
A2A5A2CR2		SAME AS A2A5A1CR2	5-62A
A2A5A2C1		CAPACITOR — MIL-TYPE CK60AW102M	5-62A
A2A5A2C2		CAPACITOR, MICA, 300 PF, ± 5% 300 WVDC MFR 84171, PN DM-10-301J	5-62A
A2A5A2C3		CAPACITOR, CERAMIC, 0.05 UF, + 80% - 20%,20 WVDC, MFR 71590, PN UK-20-503	5-62A
A2A5A2C4		SAME AS A2A5A2C3	5-62A
A2A5A2C5		SAME AS A2A5A2C1	5-62A
A2A5A2C6		SAME AS A2A5A2C3	5-62A
A2A5A2C7		CAPACITOR, VARIABLE, 9-35 PF, MFR 14844, PN B5559-946-3	5-62A
A2A5A2C8		CAPACITOR, MICA, 680 PF, ± 5%, 500 WVDC, MFR 84171, PN DM-15-681J	5-62A
A2A5A2C9		CAPACITOR, MICA, 220 PF, ± 5%, 500 WVDC, MFR 84171, PN DM-10-221J	5-62A
A2A5A2C10		SAME AS A2A5A2C1	5-62A
A2A5A2C11		SAME AS A2A5A2C3	5-62A
A2A5A2C12		CAPACITOR, MICA, 30 PF, ± 5%, 500 WVDC, MFR 84171, PN DM-10-300J	5-62A
A2A5A2C13		SAME AS A2A5A2C7	5-62A

TABLE 6-1A. SUPPLEMENTARY PARTS LIST (Continued)

RADIO RECEIVER R-1051B/URR

REF DESIG	NOTES	NAME AND DESCRIPTION	FIG. NO.
A2A5A2C14		SAME AS A2A5A2C1	5-62A
A2A5A2C15		SAME AS A2A5A2C3	5-62A
A2A5A2C16		CAPACITOR, VARIABLE, 15-60PF, MFR 14844, PN B5559-946-1	5-62A
A2A5A2C17		SAME AS A2A5A2C1	5-62A
A2A5A2C18		CAPACITOR, MICA, 1500 PF, ±5%, 500 WVDC, MFR 84171, PN DM-19-152J	5-62A
A2A5A2C19		SAME AS A2A5A2C8	5-62A
A2A5A2C20		SAME AS A2A5A2C3	5-62A
A2A5A2C21		CAPACITOR, MICA, 330 PF, ± 5%, 500 WVDC, MFR 84171, PN DM-10-331J	5-62A
A2A5A2C22		SAME AS A2A5A2C16	5-62A
A2A5A2C23		CAPACITOR, MICA, 150 PF, ± 5%, 500 WVDC, MFR 84171, PN DM-10-151J	5-62A
A2A5A2C24		SAME AS A2A5A2C3	5-62A
A2A5A2C25		SAME AS A2A5A2C1	5-62A
A2A5A2C26		SAME AS A2A5A2C3	5-62A
A2A5A2C27		CAPACITOR, MICA, 68 PF, ± 5%, 500 WVDC, MFR 84171, PN DM-10-680J	5-62A
A2A5A2C28		CAPACITOR, MICA, 33 PF, ± 5%, 500 WVDC, MFR 84171, PN DM-10-330J	5-62A
A2A5A2C29		SAME AS A2A5A2C3	5-62A
A2A5A2C30		SAME AS A2A5A2C28	5-62A
A2A5A2C31		SAME AS A2A5A2C7	5-62A
A2A5A2C32		SAME AS A2A5A2C18	5-62A
A2A5A2C33		SAME AS A2A5A2C7	5-62A
A2A5A2C34		SAME AS A2A5A2C3	5-62A
A2A5A2C35		SAME AS A2A5A2C27	5-62A
A2A5A2C36		SAME AS A2A5A2C3	5-62A
A2A5A2C37		CAPACITOR, MICA, 56 PF, ± 5%, 500 WVDC, MFR 84171, PN DM-10-560J	5-62A
A2A5A2C38		SAME AS A2A5A2C7	5-62A
A2A5A2C39		CAPACITOR, MICA, 91 PF, ± 5%, 500 WVDC, MFR 84171, PN DM-10-910J	5-62A
A2A5A2C40		CAPACITOR, MICA, 1200 PF, ± 5%, 500 WVDC, MFR 84171, PN DM-19-122J	5-62A
A2A5A2C41		SAME AS A2A5A2C1	5-62A
A2A5A2C42		SAME AS A2A5A2C3	5-62A
A2A5A2C43		SAME AS A2A5A2C1	5-62A
A2A5A2C44	*	CAPACITOR, MICA, 39 PF, ± 5%, 500 WVDC MFR 84171, PN DM-10-390J	5-62A
A2A5A2C45		SAME AS A2A5A2C9	5-62A

*NOTE: SELECTED VALUE, INITIAL VALUE SHOWN

TABLE 6-1A. SUPPLEMENTARY PARTS LIST (Continued)

RADIO RECEIVER R-1051B/URR

REF DESIG	NOTES	NAME AND DESCRIPTION	FIG. NO.
A2A5A2DS1		LAMP, INDICATOR, 10V, MFR 14844, PN A5220-946	5-62A
A2A5A2L1		INDUCTOR, 120UH, ± 5%, 0.22W AT 90°C, MFR 99800, PN 1537-80	5-62A
A2A5A2L2		INDUCTOR, 200 UH, ± 5%, 0.22W AT 90°C, MFR 99800, PN 1537-90	5-62A
A2A5A2L3		INDUCTOR, 6.8 UH, ± 10%, 0.25W at 90°C, MFR 99800, PN 1537-32	5-62A
A2A5A2L4		INDUCTOR, 10UH, ± 10%, 0.25W AT 90°C, MFR 99800, PN 1537-36	5-62A
A2A5A2Q1		TRANSISTOR, NPN, MFR 04713, PN JAN 2N706	5-62A
A2A5A2Q2		SAME AS A2A5A2Q1	5-62A
A2A5A2Q3		SAME AS A2A5A2Q1	5-62A
A2A5A2Q4		SAME AS A2A5A2Q1	5-62A
A2A5A2Q5		SAME AS A2A5A2Q1	5-62A
A2A5A2Q6		SAME AS A2A5A2Q1	5-62A
A2A5A2Q7		SAME AS A2A5A2Q1	5-62A
A2A5A2Q8		SAME AS A2A5A2Q1	5-62A
A2A5A2Q9		SAME AS A2A5A2Q1	5-62A
A2A5A2Q10		SAME AS A2A5A2Q1	5-62A
A2A5A2Q11		SAME AS A2A5A2Q1	5-62A
A2A5A2R1		RESISTOR — MIL TYPE — RC07GF102K	5-62A
A2A5A2R2		RESISTOR — MIL TYPE — RC07GF103K	5-62A
A2A5A2R3		RESISTOR — MIL TYPE — RC07GF333K	5-62A
A2A5A2R4		RESISTOR — MIL TYPE — RC07GF222K	5-62A
A2A5A2R5		SAME AS A2A5A2R3	5-62A
A2A5A2R6		SAME AS A2A5A2R2	5-62A
A2A5A2R7		SAME AS A2A5A2R4	5-62A
A2A5A2R8		RESISTOR — MIL TYPE — RC07GF821K	5-62A
A2A5A2R9		RESISTOR — MIL TYPE — RC07GF152K	5-62A
A2A5A2R10		RESISTOR — MIL TYPE — RC07GF472K	5-62A
A2A5A2R11		SAME AS A2A5A2R1	5-62A
A2A5A2R12		SAME AS A2A5A2R2	5-62A
A2A5A2R13		RESISTOR — MIL TYPE — RC07GF392K	5-62A
A2A5A2R14		RESISTOR — MIL TYPE — RC07GF683K	5-62A
A2A5A2R15		RESISTOR — MIL TYPE — RC07GF682K	5-62A
A2A5A2R16		RESISTOR — MIL TYPE — RC07GF561K	5-62A
A2A5A2R17		RESISTOR — MIL TYPE — RC07GF101K	5-62A
A2A5A2R18	*	RESISTOR — MIL TYPE — RC07GF***K	5-62A
A2A5A2R19		SAME AS A2A5A2R2	5-62A
A2A5A2R20		SAME AS A2A5A2R3	5-62A

*NOTE: SELECTED VALUE, INTIAL VALUE SHOWN

TABLE 6-1A. SUPPLEMENTARY PARTS LIST (Continued)

RADIO RECEIVER R-1051B/URR

REF DESIG	NOTES	NAME AND DESCRIPTION	FIG. NO.
A2A5A2R21		SAME AS A2A5A2R2	5-62A
A2A5A2R22		SAME AS A2A5A2R2	5-62A
A2A5A2R23		SAME AS A2A5A2R10	5-62A
A2A5A2R24		SAME AS A2A5A2R10	5-62A
A2A5A2R25		SAME AS A2A5A2R10	5-62A
A2A5A2R26		SAME AS A2A5A2R4	5-62A
A2A5A2R27		RESISTOR — MIL TYPE — RC07GF273K	5-62A
A2A5A2R28		SAME AS A2A5A2R2	5-62A
A2A5A2R29		SAME AS A2A5A2R1	5-62A
A2A5A2R30		RESISTOR — MIL TYPE — RC07GF151K	5-62A
A2A5A2R31	*	RESISTOR — MIL TYPE — RC07GF***K	5-62A
A2A5A2R32		SAME AS A2A5A2R1	5-62A
A2A5A2R33		RESISTOR — MIL TYPE — RC07GF681K	5-62A
A2A5A2R34		SAME AS A2A5A2R3	5-62A
A2A5A2R36		SAME AS A2A5A2R4	5-62A
A2A5A2R37		SAME AS A2A5A2R9	5-62A
A2A5A2R38		SAME AS A2A5A2R2	5-62A
A2A5A2R39		SAME AS A2A5A2R4	5-62A
A2A5A2R40		SAME AS A2A5A2R27	5-62A
A2A5A2R41		SAME AS A2A5A2R10	5-62A
A2A5A2R42		SAME AS A2A5A2R8	5-62A
A2A5A2R43		RESISTOR — MIL TYPE — RC07GF471K	5-62A
A2A5A2R44		RESISTOR — MIL TYPE — RC07GF5R6K	5-62A
A2A5A2R45		SAME AS A2A5A2R2	5-62A
A2A5A2R46		SAME AS A2A5A2R2	5-62A
A2A5A2R47		RESISTOR — MIL TYPE — RC07GF104K	5-62A
A2A5A2R48		SAME AS A2A5A2R1	5-62A
A2A5A2R49		RESISTOR — MIL TYPE — RC07GF470K	5-62A
A2A5A2R51		RESISTOR — MIL TYPE — RC07GF473K	5-62A
A2A5A2R52		SAME AS A2A5A2R2	5-62A
A2A5A2R53		RESISTOR — MIL TYPE — RC07GF822K	5-62A
A2A5A2R54		RESISTOR — MIL TYPE — RC07GF271K	5-62A
A2A5A2R55		SAME AS A2A5A2R1	5-62A
A2A5A2R56		SAME AS A2A5A2R2	5-62A
A2A5A2R57		SAME AS A2A5A2R16	5-62A
A2A5A2R58		SAME AS A2A5A2R4	5-62A
A2A5A2R60		SAME AS A2A5A2R33	5-62A
A2A5A2R61		SAME AS A2A5A2R1	5-62A
A2A5A2R62		SAME AS A2A5A2R2	5-62A

*NOTE: SELECTED VALUE, INTIAL VALUE SHOWN

TABLE 6-1A. SUPPLEMENTARY PARTS LIST (Continued)

RADIO RECEIVER R-1051B/URR

REF DESIG	NOTES	NAME AND DESCRIPTION	FIG. NO.
A2A5A2S1		SWITCH, ROTARY, MFR 14844, PN A4962-946	5-62A
A2A5A2T1		TRANSFORMER, FIXED, MFR 14844, PN B5216-946	5-62A
A2A5A2T2		TRANSFORMER, FIXED, MFR 14844, PN B2515-946	5-62A
A2A5A2T3		TRANSFORMER, FIXED, PRI, 10UH INDUCTOR SEC, 3/4 TURNS NO. 22 BARE SOLID TINNED WIRE, MFR 14844, PN 1537-36	5-62A
A2A5A3		OVEN (SUB. ASSY.), MFR 06845, PN 2058850-0701	5-61A
A2A5A3Q1		TRANSISTOR - MIL TYPE 2N706	5-61A
A2A5A3R1		RESISTOR, FIXED, CARBON - 82 OHMS ±2%	5-61A
A2A5A3R2		RESISTOR, TEMPERATURE SENSITIVE - 3.9K ±1%	5-61A
A2A6		TRANSLATOR/SYNTHESIZER, MFR 06845, PN 2058940-0501	5-65
A2A6A1		SYNTHESIZER, ELECTRICAL FREQUENCY — 1 MC, MFR MFR 58189, PN 666230-767	
A2A6A1A1CR1		SAME AS A2A1A3CR2	5-67
A2A6A1A1CR2		SAME AS A2A1A3CR2	5-67
A2A6A1A1CR3		SEMICONDUCTOR DEVICE, DIODE — S1 V-VAR, 0.300 IN. LG MAX, 0.125 IN. DIA MAX, MFR 73293, PN TYPE H7171	5-67
A2A6A1A2CR1		SAME AS A2A1A1CR1	5-68
A2A6A1A3CR2		SAME AS A2A1A1CR1	5-70
A2A6A1A3CR3		SAME AS A2A1A1CR1	5-70
A2A6A1A3CR4		SAME AS A2A1A1CR1	5-70
A2A6A1A3Q1		TRANSISTOR — MIL TYPE 2N964	5-70
A2A6A1A3Q3		SAME AS A2A6A1A3Q1	5-70
A2A6A1B1		MOTOR, DIRECT CURRENT — 26V, 5 AMP, W/GR RED, PERM MAG TYPE, AL HSG, 3.49 IN. × 0.867 IN. × 0.838 IN., MFR 58189, PN 666163-435	5-66
A2A6A1C1		CAPACITOR, FIXED, CERAMIC DIELECTRIC — 0.642 IN. × 0.496 IN. × 0.204 IN., 1300 UUF P/M 2%, MFR 72136, PN DM 19F132G500V	5-67
A2A6A1C2		CAPACITOR, FIXED, CERAMIC DIELECTRIC — 0.636 IN. × 0.490 IN. × 0.197 IN., 1000 UUF P/M 2%, MFR 72136, PN DM19F102G500V	5-67

TABLE 6-1A. SUPPLEMENTARY PARTS LIST (Continued)

RADIO RECEIVER R-1051B/URR

REF DESIG	NOTES	NAME AND DESCRIPTION	FIG. NO.
A2A6A1C4		CAPACITOR, FIXED, MICA - 0.470 IN: LG, 0.378 IN. H, × 0.220 IN. THK, 820 PF P/M 2%, 300 VDCW, MFR 72136, P/N DM15E821G300V	5-67
A2A6A1C6		CAPACITOR, FIXED, CERAMIC DIELECTRIC - 0.458 IN. × 0.366 IN. × 0.193 IN., 430 UUF P/M 2%, MFR 72136, P/N DM15E431G300V	5-67
A2A6A1C7		CAPACITOR, FIXED, CERAMIC DIELECTRIC - 0.455 IN. × 0.364 IN. × 0.188 IN., 360 UUF P/M 2%, MFR 72136, P/N DM15E361G300V	5-67
A2A6A1C8		SAME AS A2A1C11	5-67
A2A6A1C9		CAPACITOR, FIXED, CERAMIC DIELECTRIC - 0.454 IN. × 0.362 IN. × 0.182 IN., 270 UUF P/M 2%, MFR 72136, P/N DM15E271G300V	5-67
A2A6A1C10		CAPACITOR, FIXED, MICA - 0.453 IN. W, 0.361 IN. H, 0.180 IN. THK, 240 PF P/M 2%, 300 VDCW, MFR 72136, P/N DM15E241G300V	5-67
A2A6A1C11		CAPACITOR, FIXED, CERAMIC DIELECTRIC - 0.451 IN. × 0.359 IN. × 0.176 IN., 200 UUF P/M 2%, MFR 72136, P/N DM15E201G300V	5-66
A2A6A1C12		CAPACITOR, FIXED, CERAMIC DIELECTRIC - 0.451 IN. × 0.359 IN. × 0.175 IN., 180 UUF P/M 2%, MFR 72136, P/N DM15E181G300V	5-66
A2A6A1C13		CAPACITOR, FIXED, CERAMIC DIELECTRIC - 0.450 IN. × 0.358 IN. × 0.174 IN., 160 UUF P/M 2%, MFR 72136, P/N DM15F161G300V	5-66
A2A6A1C14		SAME AS A2A6A1C13	5-66
A2A6A1C15		CAPACITOR, FIXED, MICA DIELECTRIC - 0.450 IN. LG, 0.360 IN. W, 115 UUF P/M 1%, 500 VDCW, MFR 72136, P/N DM15F115F500V	5-66
A2A6A1C16		CAPACITOR, FIXED, CERAMIC DIELECTRIC - 0.449 IN. × 0.357 IN. × 0.170 IN., 110 UUF, MFR 72136, P/N DM15E111G-300V	5-66
A2A6A2C1		CAPACITOR - MIL TYPE CK06CW103M	5-75
A2A6A2A1CR1		SAME AS A2A1A3CR2	5-74
A2A6A2A1CR2		SAME AS A2A1A3CR2	5-74
A2A6A2A3CR1		SAME AS A2A1A1CR1	5-72
A2A6A2A3CR3		SAME AS A2A1A1CR1	5-72
A2A6A2A5CR1		SAME AS A2A1A3CR2	5-80
A2A6A3A1CR1		SAME AS A2A1A3CR2	5-82
A2A6A3A1CR2		SAME AS A2A1A3CR2	5-82
A2A6A3A1Q1		TRANSISTOR - MIL TYPE 2N1225	5-82
A2A6A3A2CR1		SAME AS A2A1A3CR2	5-83
A2A6A3A2CR2		SAME AS A2A1A3CR2	5-83

TABLE 6-1A. SUPPLEMENTARY PARTS LIST (Continued)

RADIO RECEIVER R-1051B/URR

REF DESIG	NOTES	NAME AND DESCRIPTION	FIG. NO.
A2A6A3A3CR7		SEMICONDUCTOR DEVICE, DIODE - MFR 82577, PN HS29010A	5-86
A2A6A3A4L3		TRANSFORMER, RADIO FREQUENCY - 10 KC, MFR 06845, PN 4013380-0502	5-84
A2A6A3A4L4		TRANSFORMER, RADIO FREQUENCY - 1 KC, MFR 06845, PN 4013388-0501	5-84
A2A6A3A4Q8		TRANSISTOR - MIL TYPE 2N3127	5-84
A2A6A3A4Q9		SAME AS A2A6A3A4Q8	5-84
A2A6A4A1CR1		SAME AS A2A1A1CR1	5-94D
A2A6A4A1CR2		SAME AS A2A1A1CR1	5-94D
A2A6A4A1CR3		SAME AS A2A1A1CR1	5-94D
A2A6A4A1CR4		SAME AS A2A1A1CR1	5-94D
A2A6A4A1CR5		SAME AS A2A1A1CR1	5-94D
A2A6A4A1CR6		SAME AS A2A1A1CR1	5-94D
A2A6A4A1CR7		SAME AS A2A1A1CR1	5-94D
A2A6A4A1CR8		SAME AS A2A1A1CR1	5-94D
A2A6A4A1CR9		SAME AS A2A1A1CR1	5-94D
A2A6A4A1CR10		SAME AS A2A1A1CR1	5-94D
A2A6A4A1CR11		SAME AS A2A1A1CR1	5-94D
A2A6A4A1CR12		SAME AS A2A1A1CR1	5-94D
A2A6A4A1CR13		SAME AS A2A1A1CR1	5-94D
A2A6A4A1CR14		SAME AS A2A1A1CR1	5-94D
A2A6A4A1C2		SAME AS A2A6A4A1C1	5-94D
A2A6A4A1C3		CAPACITOR, FIXED, CERAMIC, DIELECTRIC, 0.100 IN. DIA × 0.260 IN. LG, P/M 10%, 100 VDC, 33 PF, MFR 96095, PN MC70A330AK	5-94D
A2A6A4A1C5		SAME AS A2A6A4A1C3	5-94D
A2A6A4A1C6		SAME AS A2A6A4A1C4	5-94D
A2A6A4A1C7		SAME AS A2A6A4A1C4	5-94D
A2A6A4A1C8		SAME AS A2A6A4A1C4	5-94D
A2A6A4A1C9		SAME AS A2A6A4A1C4	5-94D
A2A6A4A1C10		SAME AS A2A6A4A1C4	5-94D
A2A6A4A1C11		SAME AS A2A6A4A1C1	5-94D
A2A6A4A1C12		SAME AS A2A6A4A1C3	5-94D
A2A6A4A1C13		CAPACITOR - MIL TYPE CK05CW271K	5-94D
A2A6A4A1C14		CAPACITOR, FIXED, 4300 PF, 100 VDCW, P/M 2%, MFR 58189, PN 552238-432	5-94D

TABLE 6-1A. SUPPLEMENTARY PARTS LIST (Continued)

RADIO RECEIVER R-1051B/URR

REF DESIG	NOTES	NAME AND DESCRIPTION	FIG. NO.
A2A6A4A1C15		SAME AS A2A6A4A1C1	5-94D
A2A6A4A1IC1		INTEGRATED CIRCUIT, 0.370 IN. DIA × 0.185 IN. HIGH, MFR 07263, PN SL3144 / SL6907	5-94D
A2A6A4A1IC2		SAME AS A2A6A4A1IC1	5-94D
A2A6A4A1IC3		SAME AS A2A6A4A1IC1	5-94D
A2A6A4A1IC4		INTEGRATED CIRCUIT, 0.370 IN. DIA × 0.185 IN. HIGH, MFR 07263, PN SL3143	5-94D
A2A6A4A1Q1		SAME AS A2A6A1A3Q1	5-94D
A2A6A4A1Q2		TRANSISTOR - MIL TYPE 2N706	5-94D
A2A6A4A1Q3		SAME AS A2A6A4A1Q2	5-94D
A2A6A4A1Q3		SAME AS A2A6A4A1Q2	5-94D
A2A6A4A1Q4		SAME AS A2A6A4A1Q2	5-94D
A2A6A4A1Q5		SAME AS A2A6A4A1Q2	5-94D
A2A6A4A1Q6		SAME AS A2A6A4A1Q2	5-94D
A2A6A4A1Q7		SAME AS A2A6A3A1Q1	5-94D
A2A6A4A1Q8		SAME AS A2A6A4A1Q2	5-94D
A2A6A4A1R1		RESISTOR - MIL TYPE RC07GF182J	5-94D
A2A6A4A1R2		RESISTOR - MIL TYPE RC07GF751J	5-94D
A2A6A4A1R3		RESISTOR - MIL TYPE RC07GF123J	5-94D
A2A6A4A1R4		RESISTOR - MIL TYPE RC07GF102J	5-94D
A2A6A4A1R5		RESISTOR - MIL TYPE RC07GF100J	5-94D
A2A6A4A1R6		RESISTOR - MIL TYPE RC07GF331J	5-94D
A2A6A4A1R7		RESISTOR - MIL TYPE RC07GF161J	5-94D
A2A6A4A1R8		SAME AS A2A6A4A1R7	5-94D
A2A6A4A1R9		RESISTOR - MIL TYPE RC07GF133J	5-94D
A2A6A4A1R10		SAME AS A2A6A4A1R9	5-94D
A2A6A4A1R11		RESISTOR - MIL TYPE RC07GF562J	5-94D
A2A6A4A1R12		RESISTOR - MIL TYPE RC07GF222J	5-94D
A2A6A4A1R13		RESISTOR - MIL TYPE RC07GF332J	5-94D
A2A6A4A1R14		RESISTOR - MIL TYPE RC07GF104J	5-94D
A2A6A4A1R15		SAME AS A2A6A4A1R13	5-94D
A2A6A4A1R16		SAME AS A2A6A4A1R14	5-94D
A2A6A4A1R17		SAME AS A2A6A4A1R13	5-94D
A2A6A4A1R18		SAME AS A2A6A4A1R14	5-94D
A2A6A4A1R19		SAME AS A2A6A4A1R13	5-94D
A2A6A4A1R20		SAME AS A2A6A4A1R14	5-94D
A2A6A4A1R21		SAME AS A2A6A4A1R13	5-94D
A2A6A4A1R22		RESISTOR - MIL TYPE RC07GF560J	5-94D

TABLE 6-1A. SUPPLEMENTARY PARTS LIST (Continued)

RADIO RECEIVER R-1051B/URR

REF DESIG	NOTES	NAME AND DESCRIPTION	FIG. NO.
A2A6A4A1R23		RESISTOR - MIL TYPE RC07GF103J	5-94D
A2A6A4A1R24		SAME AS A2A6A4A1R12	5-94D
A2A6A4A1R25		RESISTOR - MIL TYPE RC07GF203J	5-94D
A2A6A4A1R26		RESISTOR - MIL TYPE RC07GF561J	5-94D
A2A6A4A1R27		SAME AS A2A6A4A1R26	5-94D
A2A6A4A1R28		RESISTOR - MIL TYPE RC07GF822J	5-94D
A2A6A4A1R29		SAME AS A2A6A4A1R12	5-94D
A2A6A4A1R30		RESISTOR - MIL TYPE RC07GF273J	5-94D
A2A6A4A1R31		RESISTOR - MIL TYPE RC07GF101J	5-94D
A2A6A4A1R34		SAME AS A2A6A4A1R28	5-94D
A2A6A4A1R35		SAME AS A2A6A4A1R4	5-94D
A2A6A4A1R36		RESISTOR - MIL TYPE RC07GF681J	5-94D
A2A6A4A1R37		SAME AS A2A6A4A1R13	5-94D
A2A6A4A1R38		SAME AS A2A6A4A1R23	5-94D
A2A6A4A1TP1		SAME AS A2A6A1A2TP1	5-94D
A2A6A4A1TP2		SAME AS A2A6A1A2TP1	5-94D
A2A6A4A1TP3		SAME AS A2A6A1A2TP1	5-94D
A2A6A4A1TP4		SAME AS A2A6A1A2TP1	5-94D
A2A6A4A1TP5		SAME AS A2A6A1A2TP1	5-94D
A2A6A4A1T1		TRANSFORMER, RADIO FREQUENCY, MINIATURE, MFR 06845, PN 666231-911	5-94D
A2A6A4A2CR1		SEMICONDUCTOR DEVICE, DIODE, 0.300 IN. LG × 0.40 IN. DIA, MFR 58189, PN 810000-582	5-94A
A2A6A4A2CR3		SAME AS A2A1A3CR2	5-94A
A2A6A4A2CR4		SEMICONDUCTOR DEVICE, DIODE - MIL TYPE 1N758A	5-94A
A2A6A4A2CR5		SAME AS A2A1A3CR2	5-94A
A2A6A4A2CR6		SAME AS A2A1A3CR2	5-94A
A2A6A4A2CR7		SEMICONDUCTOR DEVICE, DIODE, 0.300 IN. × 0.125 IN. DIA, VDC 20, MFR 58189, PN 810000-583	5-94A
A2A6A4A2CR8		SAME AS A2A6A4A2CR7	5-94A
A2A6A4A2CR9		SAME AS A2A6A4A2CR7	5-94A
A2A6A4A2C1		SAME AS A2A6A4A1C1	5-94A
A2A6A4A2C3		SAME AS A2A6A4A1C3	5-94A
A2A6A4A2C4		CAPACITOR, CERAMIC - 0.01UF, 75 VDCW	5-94A
A2A6A4A2C5			5-94A
A2A6A4A2C6		CAPACITOR - MIL TYPE CK12AX101K	5-94A

TABLE 6-1A. SUPPLEMENTARY PARTS LIST (Continued)

RADIO RECEIVER R-1051B/URR

REF DESIG	NOTES	NAME AND DESCRIPTION	FIG. NO.
A2A6A4A2C7		SAME AS A2A6A4A1C4	5-94A
A2A6A4A2C8		SAME AS A2A6A4A1C1	5-94A
A2A6A4A2C9		SAME AS A2A6A4A1C4	5-94A
A2A6A4A2C10		CAPACITOR, FIXED, PAPER, ~~DIELECTRIC~~ metalized, P/M 20%, 0.05 UF, ~~200~~ 100 VDC, MFR ~~02777~~ 00656, PN ~~P052D5~~ V146ZR Bendix#2031150-0701	5-94A
A2A6A4A2C11		SAME AS A2A6A4A1C4	
A2A6A4A2C12		SAME AS A2A6A4A1C4	5-94A
A2A6A4A2C13		CAPACITOR, FIXED, MICA, MFR 58189, PN 694694-151	5-94A
A2A6A4A2C14		CAPACITOR - MIL TYPE CM05C050K03	5-94A
A2A6A4A2C14		CAPACITOR - MIL TYPE CM05C060K03	5-94A
A2A6A4A2C14		CAPACITOR - MIL TYPE CM05C070K03	5-94A
A2A6A4A2C14		CAPACITOR - MIL TYPE CM05C080K03	5-94A
A2A6A4A2C14		CAPACITOR - MIL TYPE CM05C100K03	5-94A
A2A6A4A2C14		CAPACITOR - MIL TYPE CM05C120K03	5-94A
A2A6A4A2C14		CAPACITOR - MIL TYPE CM05C180K03	5-94A
A2A6A4A2C14		CAPACITOR - MIL TYPE CM05E200J03	5-94A
A2A6A4A2C14		CAPACITOR - MIL TYPE CM05E220J03	5-94A
A2A6A4A2C14		CAPACITOR - MIL TYPE CM05E240J03	5-94A
A2A6A4A2C14		CAPACITOR - MIL TYPE CM05E270G03	5-94A
A2A6A4A2C14		CAPACITOR - MIL TYPE CM05E300G03	5-94A
A2A6A4A2C14		CAPACITOR - MIL TYPE CM05E330G03	5-94A
A2A6A4A2C14		CAPACITOR - MIL TYPE CM05E360G03	5-94A
A2A6A4A2C14		CAPACITOR - MIL TYPE CM05E390G03	5-94A
A2A6A4A2C14		CAPACITOR - MIL TYPE CM05E430G03	5-94A
A2A6A4A2C14		CAPACITOR - MIL TYPE CM05E470G03	5-94A
A2A6A4A2C15		CAPACITOR, FIXED, CERAMIC, DIELECTRIC, 47 PF, P/M 20%, 500 VDCW, MFR 91674, PN 301-S3B-470M	5-94A
A2A6A4A2FL1		FILTER, LOW PASS, LC SELECTIVE, 2.220 IN. ×0.780 IN. × 0.600 IN., MFR 06845, PN 4013370-0001	
A2A6A4A2IC1		SAME AS A2A6A4A1IC4	5-94A
A2A6A4A2L2		COIL, RADIO FREQUENCY - MIL TYPE MS90537-73	5-94A
A2A6A4A2Q1		SAME AS A2A6A4A1Q2	5-94A
A2A6A4A2Q2		SAME AS A2A6A4A1Q2	5-94A
A2A6A4A2Q3		SAME AS A2A6A4A1Q2	5-94A
A2A6A4A2R1		RESISTOR - MIL TYPE RC07GF271J	5-94A
A2A6A4A2R3		SAME AS A2A6A4A1R11	5-94A
A2A6A4A2R4		SAME AS A2A6A4A1R12	5-94A
A2A6A4A2R5		RESISTOR - MIL TYPE RC07GF152J	5-94A
A2A6A4A2R6		SAME AS A2A6A4A1R13	5-94A

TABLE 6-1A. SUPPLEMENTARY PARTS LIST (Continued)

RADIO RECEIVER R-1051B/URR

REF DESIG	NOTES	NAME AND DESCRIPTION	FIG. NO.
A2A6A4A2R7		RESISTOR - MIL TYPE RC07GF682J	5-94A
A2A6A4A2R8		RESISTOR - MIL TYPE RC07GF151J	5-94A
A2A6A4A2R9		SAME AS A2A6A4A1R31	5-94A
A2A6A4A2R10		SAME AS A2A6A4A1R1	5-94A
A2A6A4A2R11		SAME AS A2A6A4A1R31	5-94A
A2A6A4A2R12		RESISTOR - MIL TYPE RC07GF333J	5-94A
A2A6A4A2R13		SAME AS A2A6A4A2R12	5-94A
A2A6A4A2R14		SAME AS A2A6A4A1R26	5-94A
A2A6A4A2R15		SAME AS A2A6A4A2R12	5-94A
A2A6A4A2R16		RESISTOR - MIL TYPE RC07GF270J	5-94A
A2A6A4A2R17		RESISTOR - MIL TYPE RC07GF473J	5-94A
A2A6A4A2TP1		JACK, TIP, POLYAMIDE/MIL-P-17091, SP FIN, VERTICAL, MFR 74970, PN 105-851	5-94A
A2A6A4A2TP2		SAME AS A2A6A4A2TP1	5-94A
A2A6A4A2T1		TRANSFORMER, RADIO FREQUENCY, MINIATURE, MFR 06845, PN A00095-001	5-94A
A2A6A4A3C1		SAME AS A2A6A4A1C1	5-94F
A2A6A4A3C3		SAME AS A2A6A4A2C2	5-94F
A2A6A4A3C4		SAME AS A2A6A4A2C2	5-94F
A2A6A4A3C5		SAME AS A2A6A4A2C2	5-94F
A2A6A4A3C7		CAPACITOR, FIXED, MICA, 0.450 IN. ×0.360 IN. × 0.170 IN., 10 MMF, 500 VDC, P/M 1%, MFR 58189, PN 552245-010	5-94F
A2A6A4A3C8		SAME AS A2A6A4A3C7	5-94F
A2A6A4A3C9		SAME AS A2A6A4A2C2	5-94F
A2A6A4A3C10		SAME AS A2A6A4A2C2	5-94F
A2A6A4A3C11		SAME AS A2A6A4A2C2	5-94F
A2A6A4A3C12		SAME AS A2A6A4A2C2	5-94F
A2A6A4A3C13		CAPACITOR, FIXED, MICA, MFR 72136, PN DM15E431G300V	5-94F
A2A6A4A3C14		SAME AS A2A6A4A2C2	5-94F
A2A6A4A3C16		SAME AS A2A6A4A2C2	5-94F
A2A6A4A3FL1		FILTER, CRYSTAL, BANDPASS, 1.500 IN. × 0.750 IN. × 0.875 IN., 7.1 MC, MFR 19057, PN 767701	5-94F
A2A6A4A3L1		COIL, RADIO FREQUENCY - MIL TYPE MS90537-49	5-94F
A2A6A4A3Q1		SAME AS A2A6A4A1Q2	5-94F
A2A6A4A3Q2		SAME AS A2A6A3A4Q8	5-94F
A2A6A4A3Q3		TRANSISTOR - MIL TYPE 2N1142	5-94F
A2A6A4A3Q4		SAME AS A2A6A4A3Q3	5-94F
A2A6A4A3R1		SAME AS A2A6A4A1R31	5-94F

TABLE 6-1A. SUPPLEMENTARY PARTS LIST (Continued)

RADIO RECEIVER R-1051B/URR

REF DESIG	NOTES	NAME AND DESCRIPTION	FIG. NO.
A2A6A4A3R2		SAME AS A2A6A4A1R23	5-94F
A2A6A4A3R3		RESISTOR - MIL TYPE RC07GF153J	5-94F
A2A6A4A3R4		SAME AS A2A6A4A1R12	5-94F
A2A6A4A3R5		RESISTOR - MIL TYPE RC07GF472J	5-94F
A2A6A4A3R6		SAME AS A2A6A4A2R16	5-94F
A2A6A4A3R7		SAME AS A2A6A4A3R3	5-94F
A2A6A4A3R8		SAME AS A2A6A4A1R23	5-94F
A2A6A4A3R9		SAME AS A2A6A4A1R36	5-94F
A2A6A4A3R10		SAME AS A2A6A4A1R36	5-94F
A2A6A4A3R11		SAME AS A2A6A4A1R23	5-94F
A2A6A4A3R12		SAME AS A2A6A4A3R3	5-94F
A2A6A4A3R13		SAME AS A2A6A4A1R31	5-94F
A2A6A4A3R14		RESISTOR - MIL TYPE RC07GF470J	5-94F
A2A6A4A3R15		SAME AS A2A6A4A1R13	5-94F
A2A6A4A3R16		SAME AS A2A6A4A1R23	5-94F
A2A6A4A3R17		SAME AS A2A6A4A3R14	5-94F
A2A6A4A3R18		SAME AS A2A6A4A3R3	5-94F
A2A6A4A3R19		SAME AS A2A6A4A1R33	5-94F
A2A6A4A3R20		RESISTOR, VARIABLE, MICRO-MINIATURE, WIREWOUND, 3/8 IN. ×3/8 IN. ×13/64 IN., 200 OHMS, P/M 5%, MFR 80294, P/N ~~3280~~ 3290W-1-201	5-94F
A2A6A4A3R21		SAME AS A2A6A4A3R14	5-94F
A2A6A4A3TP1		SAME AS A2A6A4A1TP1	5-94F
A2A6A4A3TP2		SAME AS A2A6A4A2TP1	5-94F
A2A6A4A3TP3		SAME AS A2A6A4A1TP1	5-94F
A2A6A4A3TP4		SAME AS A2A6A4A2TP1	5-94F
A2A6A4A3TP5		SAME AS A2A6A4A1TP1	5-94F
A2A6A4A3T1		TRANSFORMER, RADIO FREQUENCY, MINIATURE, 0.422 IN. DIA × 0.490 IN. LG, MFR 58189, PN 666231-908	5-94F
A2A6A5		GENERATOR, SPECTRUM - MFR 06845, PN A00022-001	5-95
A2A6A5A1		100 KC SPECTRUM ASSEMBLY, MFR 06845, PN 666230-924	5-96
A2A6A5A1CR2		SEMICONDUCTOR DEVICE, DIODE - MIL TYPE 1N816W	5-96
A2A6A5A1CR3		SAME AS A2A6A5A1CR2	5-96
A2A6A5A1CR4		SAME AS A2A1A3CR2	5-96
A2A6A5A2		10 KC SPECTRUM ASSEMBLY, MFR 06845, PN 666230-929	5-97
A2A6A5A2CR3		SAME AS A2A1A1CR1	5-97
A2A6A5A2CR4		SAME AS A2A6A5A1CR2	5-97
A2A6A5A3		1 KC SPECTRUM ASSEMBLY, MFR 06845, PN 666230-934	5-98
A2A6A5A3CR2		SAME AS A2A1A1CR1	5-98
A2A6A5A3CR3		SAME AS A2A1A1CR1	5-98

TABLE 6-1A. SUPPLEMENTARY PARTS LIST (Continued)

RADIO RECEIVER R-1051B/URR

REF DESIG	NOTES	NAME AND DESCRIPTION	FIG. NO.
A2A6A5A3CR4		SAME AS A2A1A3CR2	5-98
A2A6A5A3CR5		SAME AS A2A6A5A1CR2	5-98
A2A6A5A4C1		SAME AS A6A4A1C1	5-99
A2A6A5A4E2		CONNECTOR, RECEPTACLE, MFR 58189, PN 696464-510	5-99
A2A6A5A4E3		CONNECTOR, RECEPTACLE, ELECTRICAL, RED TEFLON, BERYLLIUM COPPER, ID 0.148 IN. × 0.345 IN. LG, MFR 98291, PN SKT-14	5-99
A2A6A5A4J1		CONNECTOR, RECEPTACLE, ELECTRICAL, BRS, TEFLON INSULATOR, MTR HOLE, 13/64 IN. × 19/32 IN. LG, MFR 92291, PN 3102	5-99
A2A6A5A4Q1		SAME AS A2A6A4A1Q2	5-99
A2A6A5A4R1		SAME AS A2A6A4A1R31	5-99
A2A6A5A4R2		SAME AS A2A6A4A1R26	5-99
A2A6A5A4R3		RESISTOR - MIL TYPE RL07S362J	5-99
A2A6A5A4R4		SAME AS A2A6A4A1R23	5-99
A2A6A5A4R5		SAME AS A2A6A4A1R23	5-99
A2A6A6A1CR1		SAME AS A2A1A1CR1	5-101
A2A6A6A1CR2		SAME AS A2A1A1CR1	5-101
A2A6A6A1CR3		SAME AS A2A1A1CR1	5-101
A2A6A6A1CR4		SAME AS A2A1A1CR1	5-101
A2A6A6A1CR5		SAME AS A2A1A1CR1	5-101
A2A6A6A1CR6		SAME AS A2A1A1CR1	5-101
A2A6A6A1CR7		SAME AS A2A1A1CR1	5-101
A2A6A6A1CR8		SAME AS A2A1A1CR1	5-101
A2A6A6A1CR9		SAME AS A2A1A3CR2	5-101
A2A6A6A1CR10		SAME AS A2A1A3CR2	5-101
A2A6A6A1R4		RESISTOR - MIL TYPE RVC6PY101B	5-101
A2A8CR9		SAME AS A2A1A1CR1	5-19
A2A8CR10		SAME AS A2A1A1CR1	5-19
A2A8CR11		SAME AS A2A1A1CR1	5-19
A2A8CR12		SAME AS A2A1A1CR1	5-19
A2A8CR13		SEMICONDUCTOR DEVICE, DIODE - MIL TYPE 1N3024B	5-19
A2A8CR14		SAME AS A2A8CR13	5-19
A2A8CR15		SAME AS A2A1A1CR1	5-19
A2A8CR17		SEMICONDUCTOR DEVICE, DIODE - MIL TYPE 1N750A	5-19
A2A9CR1		SAME AS A2A1A1CR1	5-21
A2A9Q1		TRANSISTOR - MIL TYPE 2N2905A	5-21
A2A10DS3		LIGHT, INDICATOR, 28V, 0.04 AMP, MFR 58189 PN 810001-567	5-15
A2A10DS4		SAME AS A2A10DS3	5-15

TABLE 6-1A. SUPPLEMENTARY PARTS LIST (Continued)

RADIO RECEIVER R-1051B/URR

REF DESIG	NOTES	NAME AND DESCRIPTION	FIG. NO.
A2A11CR1		SEMICONDUCTOR DEVICE, DIODE - MIL TYPE 748A	5-21A
A2A11CR2		SEMICONDUCTOR DEVICE, DIODE - MIL TYPE 746A	5-21A
A2A11C1		SAME AS A2A6A4A1C1	5-21A
A2A11C2		SAME AS A2A6A4A2C2	5-21A
A2A11C3		SAME AS A2A6A4A1C1	5-21A
A2A11C4		SAME AS A2A6A4A2C5	5-21A
A2A11R1		SAME AS A2A6A4A2R12	5-21A
A2A11R2		RESISTOR - MIL TYPE RT22C2P502	5-21A
A2A11R3		RESISTOR - MIL TYPE RL07S512J	5-21A
A2A11R4		SAME AS A2A6A4A1R4	5-21A
A2A11R6		RESISTOR - MIL TYPE RL20S203J	5-21A
A2A11R7		RESISTOR - MIL TYPE RC20GF475J	5-21A

6-23. SUPPLEMENTARY PARTS LIST FOR RADIO RECEIVER R-1051B/URR.

6-24. INTRODUCTION.

6-25. Table 6-1B is a Supplementary Parts List for Radio Receiver R-1051B/URR. Those parts not included in this table are listed in either table 6-1A, 6-1, or 6-0. Always refer to the Supplementary Parts List first; table 6-0 for the R-1051/URR and table 6-1B and table 6-1A for the R-1051B/URR. For an explanation of general format see original paragraphs 6-1 through 6-16.

TABLE 6-1B. SUPPLEMENTARY PARTS LIST

RADIO RECEIVER R-1051B/URR

REF DESIG	NOTES	NAME AND DESCRIPTION	FIG. NO.
		RECEIVER, RADIO R-1051/URR-MFR 06845, PN A00026-001	
A1A1J3		CONNECTOR RECEPTACLE ELECTRICAL - 1.375 IN. LG. × 1.375 IN. W. × 1.093 IN. H., 3 CONTACTS, LESS THAN 0.00001 CC/SEC AIR LEAKAGE AT 15 PS1 DIFFERENTIAL, MFR 96906, P/N 71-741165-5-P	5-17
A1A1J5		CONNECTOR PLUG ELECTRICAL - MFR 96906, P/N 71-7411056-4-P	5-17
A2		CHASSIS AND FRONT PANEL - MFR 06845, PN A00012-001	5-15
A2J17		CONNECTOR, RECEPTACLE, ELECTRICAL - 2.088 IN. LG, 0.494 IN. W, 9 CONT, ASB FILLED, INSERT DBM-9W4, MFR 58189, PN 555146-575	5-16
A2R21		RESISTOR - MIL TYPE RC07GF511J	5-15B
A2R22		RESISTOR - MIL TYPE RC07GF511J	5-15B
A2R23		RESISTOR - MIL TYPE RW31G64R9	5-15R
A2S2		SWITCH, ROTARY - 4 SECT., 18 P, 8 POS, NONSHORTING CONT, LOW CUR. CAP, STL, 1.016 IN. OD, 2.700 IN. LG, MFR 58189, PN 810001-461	5-15
A2A1		RECEIVER MODE SELECTOR - MFR 06845, PN 666230-015	5-14
A2A1P1		CONNECTOR - MFR 58189, PN 555146-021	5-21
A2A1R1		RESISTOR - MIL TYPE RC07GF101J	5-21
A2A1R2		SAME AS A2A1R1	5-21
A2A1A1C2		CAPACITOR - MIL TYPE CS13BF105M	5-22
A2A1A3Q1		TRANSISTOR - MFR 80131, PN 4017647-0701 MIL TYPE 2N4890	5-25
A2A1A3Q2		TRANSISTOR - MIL TYPE 2N1225	5-25
A2A1A3R1		RESISTOR - MIL TYPE RC07GF681J	5-25
A2A1A3R3		RESISTOR - MIL TYPE RC07GF103J	5-25
A2A1A3R4	*	RESISTOR - MIL TYPE RC07GF823	5-25
A2A2		RECEIVER, INTERMEDIATE FREQUENCY/AUDIO AMPLIFIER - MFR 06845, PN 666230-011	5-14
A2A2P1		CONNECTOR, RECEPTACLE, ELECTRICAL - MFR 91146, PN DCM-25W3PC-31	5-29
A2A2A1C1		CAPACITOR - MIL TYPE CS13BF685M	5-27
A2A2A1C2		CAPACITOR - MIL TYPE CS13BF156M	5-27
A2A2A1C3		CAPACITOR - MIL TYPE CS13BC396K	5-27
A2A2A1C6		CAPACITOR - MIL TYPE CS13BF226M	5-27
A2A2A1Q7		TRANSISTOR - MIL TYPE 2N1225	5-27

* SELECTED VALUE

TABLE 6-1B. SUPPLEMENTARY PARTS LIST (Continued)

RADIO RECEIVER R-1051B/URR

REF DESIG	NOTES	NAME AND DESCRIPTION	FIG. NO.
A2A2A1Q8		SAME AS 1A2A2A1Q9	5-27
A2A2A1R31		RESISTOR - MIL TYPE RC07GF42J	5-28
A2A2A2C18		CAPACITOR - MIL TYPE CS13BF476M	5-30
A2A2A2C25		CAPACITOR - MIL TYPE CS13BF476M	5-30
A2A2A2C26		CAPACITOR, FIXED, CERAMIC - MFR 86335, PN K4000N-01Z	5-31
A2A2A2Q1		TRANSISTOR - MIL TYPE 2N1225	5-30
A2A2A2Q4		SAME AS 1A2A2A2Q1	5-30
A2A2A2Q5		SAME AS 1A2A2A2Q1	5-30
A2A2A2Q6		SAME AS 1A2A2A2Q1	5-30
A2A2A2Q9		TRANSISTOR - MIL TYPE 2N1131	5-31
A2A2A2Q10		TRANSISTOR - MIL TYPE 2N1131	5-31
A2A2A2R26		RESISTOR - MIL TYPE RC07GF101J	5-31
A2A2A2R35		RESISTOR - MIL TYPE RC07GF121J	5-31
A2A2A2R36		RESISTOR - MIL TYPE RC07GF472J	5-31
A2A2A2R37		RESISTOR - MIL TYPE RC20GF101J	5-31
A2A2A3CR2		DIODE - MIL TYPE 1N277	5-29
A2A2A3Q1		TRANSISTOR - MIL TYPE 2N4890	5-29
A2A2A3Q2		TRANSISTOR - MIL TYPE 2N4890	5-29
A2A2A3Q3		TRANSISTOR - MIL TYPE 2N4890	5-29
A2A3A1Q7		TRANSISTOR - MIL TYPE 2N1225	5-27
A2A3A1Q8		SAME AS 1A2A3A1Q7	5-27
A2A3A2Q1		TRANSISTOR - MIL TYPE 2N1225	5-30
A2A3A2Q4		SAME AS 1A2A3A2Q1	5-30
A2A3A2Q5		SAME AS 1A2A3A2Q1	5-30
A2A3A2Q6		SAME AS 1A2A3A2Q1	5-30
A2A4		AMPLIFIER, RADIO FREQUENCY - MFR 06845, PN 666230-019	5-14
A2A4A2C4		CAPACITOR, FIXED, MICA DIELECTRIC - 0.470 IN. LG, 0.390 IN. W, 250 UUF P/M1/2%, 500 VDCW, MFR 72136, PN DM15F251D500V	5-49
A2A4A38C5		CAPACITOR - MIL TYPE CK06CW122K	5-53
A2A4A38Q1		TRANSISTOR - MIL TYPE 2N1142	5-53
A2A4CR1		Diode-mil type 1N975B	5-15B
A2A6A1C5		CAPACITOR, FIXED, MICA DIELECTRIC - 0.470 IN. LG, 0.390 IN. W, 507 UUF P/M 2%, 300 VCDW, MFR 72136 PN DM15F501F300V	5-68
A2A6A1L1		COIL, RADIO FREQ - 1000 UH P/M 10%, 0.410 IN. LG, 0.187 IN. DIA., MFR 96906, PN MS 90537-49	5-68
A2A6A1C18	*	CAPACITOR, FIXED, CERAMIC - MFR 96905, 100 VDCW, 75-680 PF	5-67
A2A6A1A2Q1		SAME AS 1A2A1A3Q2	5-67
A2A6A1A2Q2		SAME AS 1A2A1A3Q2	5-67
A2A6A1A3Q5		TRANSISTOR - MFR 04713, TYPE 2N3127	5-69

* SELECTED VALUE

TABLE 6-1B. SUPPLEMENTARY PARTS LIST (Continued)

RADIO RECEIVER R-1051B/URR

REF DESIG	NOTES	NAME AND DESCRIPTION	FIG. NO.
A2A6A1A3R1		RESISTOR - MIL TYPE RC205511J	5-69
A2A6A2C1		CAPACITOR - MIL TYPE CK06CW103M	5-72
A2A6A2L1		COIL, RF - MFR 96906, PN MS90537-30	5-72
A2A6A2A1R8		RESISTOR - MIL TYPE RC07GF512J	5-74
A2A6A2A1R13		RESISTOR - MIL TYPE RC07GF561J	5-74
A2A6A2A1R14		RESISTOR - MIL TYPE RC07GF431J	5-74
A2A6A2A2C5		CAPACITOR, FIXED, CERAMIC DIELECTRIC - 0.270 IN. LG, 0.320 IN. W, 47 UUF P/M 5%, 75 VDCW, MFR 86335, PN MIN C470J	5-77
A2A6A2A2Q1		TRANSISTOR - MIL TYPE 2N3127	5-77
A2A6A2A2Q2		SAME AS 1A2A6A2A2Q1	5-77
A2A6A2A2R1		RESISTOR - MIL TYPE RC07GF103J	5-77
A2A6A2A3Q2		TRANSISTOR - MIL TYPE 2N3127	5-72
A2A6A2A3R16		RESISTOR - MIL TYPE RC07GF680J	5-71
A2A6A2A4C24		CAPACITOR, FIXED, CERAMIC - MFR 72136, PN DM15E561G300V	5-75
A2A6A2A4Q1		TRANSISTOR - MIL TYPE 2N3127	5-75
A2A6A2A4Q2		TRANSISTOR - MIL TYPE 2N3127	5-75
A2A6A2A4Q3		TRANSISTOR - MIL TYPE 2N3127	5-75
A2A6A2A4Q4		TRANSISTOR - MIL TYPE 2N3127	5-75
A2A6A2A4R1		RESISTOR - MIL TYPE RC07GF103J	5-75
A2A6A2A4R18		RESISTOR - MIL TYPE RC07GF103J	5-75
A2A6A2A4R23		RESISTOR - MIL TYPE RC07GF471J	5-75
A2A6A2A5Q1		TRANSISTOR - MIL TYPE 2N3127	5-80
A2A6A2A5R1		RESISTOR - MIL TYPE RC07GF682J	5-80
A2A6A2A5R12		RESISTOR - MIL TYPE RC07GF391J	5-80
A2A6A3A1Q2		SAME AS 1A2A1A3Q2	5-81
A2A6A3A1R7		RESISTOR - MIL TYPE RC07GF5R1J	5-82
A2A6A3A1R15		RESISTOR - MIL TYPE RC07GF821J	5-82
A2A6A3A2Q2		SAME AS 1A2A1A3Q2	5-82
A2A6A3A3R52	*	RESISTOR - MIL TYPE RC07GF***J	5-86
A2A6A3AQ11		SAME AS 1A2A1A3Q2	5-85
A2A6A3A3R52		RESISTOR - MIL TYPE RC07GF300J	5-85
A2A6A3A4Q6		TRANSISTOR - MIL TYPE 2N3127	5-84
A2A6A3A4Q7		TRANSISTOR - MIL TYPE 2N3127	5-84
A2A6A3A4Q10		TRANSISTOR - MIL TYPE 2N3127	5-84
A2A6A4		SYNTHESIZER, ELECTRICAL FREQ - 100 CPS, MFR 06845 PN 2058937-0501	5-89
A2A6A4A1C1		CAPACITOR - MIL TYPE CS13AF105M	5-94D
A2A6A4A1C4		CAPACITOR - MIL TYPE CK06CW103K	5-89

* SELECTED VALUE

TABLE 6-1B. SUPPLEMENTARY PARTS LIST (Continued)

RADIO RECEIVER R-1051B/URR

REF DESIG	NOTES	NAME AND DESCRIPTION	FIG. NO.
A2A6A4A1C16		SAME AS 1A2A1A1C2	5-89
A2A6A4A1C17		CAPACITOR - MIL TYPE CS13BF225M	5-89
A2A6A4A1R3		RESISTOR - MIL TYPE RC07GF123J	5-94D
A2A6A4A1R10		RESISTOR - MIL TYPE RC07GF133J	5-94D
A2A6A4A1R19		RESISTOR - MIL TYPE RC07GF332J	5-94D
A2A6A4A1R32		RESISTOR - MIL TYPE RC07GF392J	5-94D
A2A6A4A1R33		RESISTOR - MIL TYPE RC07GF221J	5-94D
A2A6A4A1R34		RESISTOR - MIL TYPE RC07GF822J	5-94D
A2A6A4A2C2		CAPACITOR, FIXED, MICA - MFR 86335, PN SSM01-88	5-94A
A2A6A4A3C2		CAPACITOR - MIL TYPE CS13BF225M	5-91
A2A6A4A3C6		CAPACITOR - MIL TYPE CS13BF695M	5-91
A2A6A4A3C15		CAPACITOR - MIL TYPE CS13BF225M	5-91
A2A6A4A3R5		RESISTOR - MIL TYPE RC07GF472J	5-94F
A2A6A5A1C9		CAPACITOR, FIXED, CERAMIC - MFR 86335, PN K1200M-001M	5-96
A2A6A5A1C10		CAPACITOR - MIL TYPE CC64UH121G	5-95
A2A6A5A1Q6		TRANSISTOR - MIL TYPE 2N3127	5-96
A2A6A5A2CR2		DIODE - MIL TYPE 1N277	5-97
A2A6A5A3CR1		DIODE - MIL TYPE 1N758A	5-98
A2A6A5A3R3		RESISTOR - MIL TYPE RC07GF682J	5-98
A2A6A5A4		PULSE INVERTER, MFR 06845, PN A00073-001	5-99
A2A6A6A1CR11		DIODE - MIL TYPE 1N3064	5-101
A2A6A6A1R8	*	RESISTOR - MIL TYPE RC07GF***J	5-101
A2A8CR5		DIODE - MIL TYPE 1N4246	5-19
A2A8CR6		DIODE - MIL TYPE 1N4246	5-19
A2A8CR7		DIODE - MIL TYPE 1N4246	5-19
A2A8CR8		DIODE - MIL TYPE 1N4246	5-19
A2A9R5		RESISTOR - MIL TYPE RC07GF100J	5-21
A2A11		VERNIER AND 4VDC SUPPLY, MFR 06845, PN 2058942-0501	5-21A

* SELECTED VALUE

6-26. SUPPLEMENTARY PARTS LIST FOR RADIO RECEIVER R-1051B/URR.

6-27. INTRODUCTION.

6-28. Table 6-1C is a Supplementary Parts List for Radio Receiver R-1051B/URR. This table combines changes that were made in Table 6-1 by Supplementary Parts Lists 6-1A and 6-1B into a revised Supplementary Parts List. Always refer to Supplementary Parts List 6-1C first. For an explanation of general format see original paragraphs 6-1 through 6-16.

TABLE 6-1C. SUPPLEMENTARY PARTS LIST

RADIO RECEIVER R-1051B/URR

REF DESIG	NOTES	NAME AND DESCRIPTION	FIG. NO.
		RECEIVER, RADIO, R-1051B/URR; MFR 06845 PN: 2058947-0502	
A1		CASE SUBASSEMBLY, RECEIVER; MFR 06845, PN: 666230-007	5-17
A1A1		FILTER BOX SUBASSEMBLY, RECEIVER; MFR 06845, PN: 666230-733	5-17
A1A1J3		CONNECTOR, RECEPTACLE, ELECTRICAL, MIL-TYPE MS33683-16S-SP	5-17
A1A1J4		CONNECTOR, RECEPTACLE, ELECTRICAL, MFR 77280, PN: PT07A-20-39-P	5-17
A1A1J5		CONNECTOR, RECEPTACLE, ELECTRICAL, MIL-TYPE MS33680-10SL-4P	5-17
A1J25		CONNECTOR, RECEPTACLE, ELECTRICAL; 0.870 DIA × 1.5 IN., MFR 91146, PN: N-JB-F-0	5-17
A1P21		CONNECTOR, RECEPTACLE, ELECTRICAL; 2.635 × 0.605 × 0.633 IN., 50 CONTACTS, MFR 71468, PN: PPSM22S2	
A1P22		CONNECTOR, RECEPTACLE, ELECTRICAL; 1.541 × 0.494 × 0.737 IN., MFR 71468, PN: DAMF3W3S	
A2		CHASSIS ASSEMBLY, RECEIVER; MFR 06845, PN: 2058946	5-15
A2CR4		DIODE - MIL TYPE 1N648	5-15
A2DS5		LAMP, GLOW; 0.25 DIA × 0.81 IN., 2.0 MA, 110-125 VDCW, MFR 24455, PN NE-2J	5-15
A2J1		CONNECTOR, MIL-TYPE JJ-089	5-15
A2J2		SAME AS A2J1	5-15
A2K1		RELAY, ARMATURE-ELECTROMAGNETIC; 9750 OHMS ±10%, 0.80 × 1.06 × 0.39 IN., 26.5 WVDC ±5%, MFR 02289, PN: 2B-2111	5-16
A2K2		SAME AS A2K1	5-16
A2K3		SAME AS A2K1	5-16
A2L1		INDUCTOR, POWER, 2.62 × 4.50 × 0.68 IN., 15H, 70 MA, 175 VDCW, MFR 00144, PN: A14514	5-16
A2L2		INDUCTOR, POWER, 4.37 × 4.12 × 2.50 IN., 400 MH, 50 MA, 140 VDCW, MFR 17637, PN: TB1022	5-16
A2R13		RESISTOR - MIL TYPE RL07S433J	5-16
A2R15		RESISTOR - MIL TYPE RL07S112J	5-16

TABLE 6-1C. SUPPLEMENTARY PARTS LIST (Continued)

RADIO RECEIVER R-1051B/URR

REF DESIG	NOTES	NAME AND DESCRIPTION	FIG. NO.
A2R20		RESISTOR - MIL TYPE RL07S133J	5-16
A2R21		RESISTOR - MIL TYPE RL07S511J	5-16
A2R22		SAME AS A2R21	5-16
A2R23		RESISTOR - MIL TYPE RE65G64R9	5-16
A2S3, S4		CODE GENERATOR ASSEMBLY, RECEIVER: MFR 06845, PN: 66230-694	5-16
A2S6		SWITCH ASSEMBLY. VERNIER. 100 CPS: MFR 06845, PN: 2058943-0501	5-16
A2XC1		SOCKET, TUBE, OCTAL. 1250 VDCW. 5 AMP. MFR 72825, PN: 9729-38	5-16
A2XC2		SAME AS A2XC1	5-16
A2XDS5		HOUSING, INDICATOR LIGHT. 0.56 DIA × 1.047 IN., 27K OHMS ±10%, 120 VDCW, MFR 72619, PN: 137-8864-09-522	5-16
A2A1		MODE SELECTOR ASSEMBLY, RECEIVER, MFR 06845, PN: 666230-015	5-14
A2A1C1	*	CAPACITOR, FIXED, MICA; 0.46 × 0.37 × 0.18 IN., 130 UUF ±2%, 300 VDCW, MFR 72136, PN: DM15E1300F300V	5-21
A2A1C1	*	CAPACITOR, FIXED, CERAMIC; 0.46 × 0.37 × 0.19 IN., 150 UUF ±2%, 300 VDCW, MFR 72136, PN: DM15E1500F300V	5-21
A2A1C1	*	CAPACITOR, FIXED, CERAMIC; 0.45 × 0.35 × 0.17 IN., 142 UUF ±2%, 300 VDCW, MFR 72136, PN: DM15F142F300V NOTE: ITEMS MARKED (*) ARE TO BE SELECTED TO MATCH A2A1FL1	5-21
A2A1C2		SAME AS A2A1C1 TO BE SELECTED TO MATCH A2A1FL3	5-21
A2A1C3		SAME AS A2A1C1 TO BE SELECTED TO MATCH A2A1FL2	5-21
A2A1C5		SAME AS A2A1C1	5-21
A2A1C6		SAME AS A2A1C1	5-21
A2A1C7		SAME AS A2A1C1	5-21
A2A1P1		CONNECTOR, RECEPTACLE, ELECTRICAL; 2.08 × 0.49 × 0.61 IN., 13 CONTACTS, MFR 71468, PN: DBM13W3P	5-21
A2A1P2		CONNECTOR, RECEPTACLE, ELECTRICAL; 2.08 × 0.49 × 0.61 IN., 9 CONTACTS, MFR 71468, PN: DBM9W4P	5-21
A2A1R1	**	RESISTOR - MIL TYPE RL07S511J	5-21
A2A1R1	**	RESISTOR - MIL TYPE RC07GF471J	5-21
A2A1R1	**	RESISTOR - MIL TYPE RL07S491J	5-21
A2A1R1	**	RESISTOR - MIL TYPE RC07GF391J	5-21
A2A1R1	**	RESISTOR - MIL TYPE RC07GF331J	5-21
A2A1R1	**	RESISTOR - MIL TYPE RC07GF271J	5-21
A2A1R1	**	RESISTOR - MIL TYPE RC07GF221J	5-21
A2A1R1	**	RESISTOR - MIL TYPE RC07GF181J	5-21
A2A1R1	**	RESISTOR - MIL TYPE RC07GF151J	5-21
A2A1R1	**	RESISTOR - MIL TYPE RC07GF101J	5-21
A2A1R1	**	RESISTOR - MIL TYPE RC07GF561J	5-21
A2A1R1	**	RESISTOR - MIL TYPE RL07S621J	5-21
A2A1R1	**	RESISTOR - MIL TYPE RC07GF681J	5-21

TABLE 6-1C. SUPPLEMENTARY PARTS LIST (Continued)

RADIO RECEIVER R-1051B/URR

REF DESIG	NOTES	NAME AND DESCRIPTION	FIG. NO.
A2A1R1	**	RESISTOR - MIL TYPE RL07S751J	5-21
A2A1R1	**	RESISTOR - MIL TYPE RC07GF821J	5-21
A2A1R1	**	RESISTOR - MIL TYPE RL07S911J	5-21
A2A1R1	**	RESISTOR - MIL TYPE RC07GF102J	5-21
A2A1R2	**	RESISTOR - MIL TYPE RL07S511J	5-21
A2A1R2	**	RESISTOR - MIL TYPE RC07GF471J	5-21
A2A1R2	**	RESISTOR - MIL TYPE RL07S471J	5-21
A2A1R2	**	RESISTOR - MIL TYPE RC07GF391J	5-21
A2A1R2	**	RESISTOR - MIL TYPE RC07GF331J	5-21
A2A1R2	**	RESISTOR - MIL TYPE RC07GF271J	5-21
A2A1R2	**	RESISTOR - MIL TYPE RC07GF221J	5-21
A2A1R2	**	RESISTOR - MIL TYPE RC07GF181J	5-21
A2A1R2	**	RESISTOR - MIL TYPE RC07GF151J	5-21
A2A1R2	**	RESISTOR - MIL TYPE RC07GF101J	5-21
		NOTE: ITEMS MARKED (**) ARE TO BE SELECTED TO MEET UNIT SPECIFICATIONS	
A2A1A1		MODE GATES ASSEMBLY, RECEIVER, MFR 06845, PN: 666231-740	5-21
A2A1A1CR1		DIODE - MIL TYPE 1N277	5-22
A2A1A1CR2		SAME AS A2A1A1CR1	5-22
A2A1A1CR3		SAME AS A2A1A1CR1	5-22
A2A1A1CR4		SAME AS A2A1A1CR1	5-22
A2A1A1C1		CAPACITOR, FIXED, METALLIZED PAPER OR MYLAR, 0.62 × 0.47 × 0.24 IN., 0.1 UF ±20%, 200 VDCW, MFR 58189, PN: 666164-913	5-22
A2A1A1C2		DIODE - MIL TYPE CS13BF103K	5-22
A2A1A2		500 KC FILTER AND GATE ASSEMBLY, MFR 06845, PN: 666231-035	5-22
A2A1A2C1		CAPACITOR, FIXED, METALLIZED PAPER OR MYLAR, 0.62 × 0.21 × 0.27 IN., 0.2 UF ±20%, 200 VDCW, MFR 58189, PN: 666164-914	5-22
A2A1A2R1		RESISTOR - MIL TYPE RL20S911J	5-22
A2A1A2R5		RESISTOR - MIL TYPE RL20S511J	5-22
A2A1A3		BFO ASSEMBLY, RECEIVER, MFR 06845, PN: 666231-745	5-23
A2A1A3CR2		DIODE - MIL TYPE 1N3064	5-23
A2A1A3CR3		SAME AS A2A1A3CR2	5-23
A2A1A3Q1		TRANSISTOR, MFR 06845, PN: 4017647-0701, 80131 Type 2N4890	5-23
A2A1A3Q2		TRANSISTOR - MIL TYPE 2N1225	5-23
A2A1A3R1		RESISTOR - MIL TYPE RC07GF684J	5-23
A2A1A3R3		RESISTOR - MIL TYPE RC07GF103J	5-23
A2A1A3R4	*	RESISTOR - MIL TYPE RC07GF108J	5-23
A2A1A3R4	*	RESISTOR - MIL TYPE RC07GF473J	5-23
A2A1A3R4	*	RESISTOR - MIL TYPE RC07GF223J	5-23

TABLE 6-1C. SUPPLEMENTARY PARTS LIST (Continued)

RADIO RECEIVER R-1051B/URR

REF DESIG	NOTES	NAME AND DESCRIPTION	FIG. NO.
A2A1A3R4	*	RESISTOR - MIL TYPE RC07GF683J	5-23
A2A1A3R4	*	RESISTOR - MIL TYPE RC07GF823J	5-23
		NOTE: ITEMS MARKED (*) ARE SELECTED TO MEET UNIT SPECIFICATIONS.	
A2A1A3R6		RESISTOR - MIL TYPE RC07GF102J	5-23
A2A1A3R10		RESISTOR - MIL TYPE RC07GF272J	5-23
A2A1A3R11		RESISTOR - MIL TYPE RC07GF101J	5-23
A2A2		RECEIVER IF ASSEMBLY, MFR 06845, PN: 666230-011	5-14
A2A2C26		CAPACITOR - FIXED METALLIZED PAPER, 0.5 IN. LG × 0.222 IN. DIA, 0.05 UF ±20%, 100 VDCW, MFR 06845, PN: 2031150-0701	5-26
A2A2P1		CONNECTOR, RECEPTACLE, ELECTRICAL, 1.54 × 0.49 × 0.61 IN., MFR 91146, PN: DCM25W3PC31	5-26
A2A2T1		TRANSFORMER, AUDIO, 144 OHMS, 40 MA, 75 VDCW, MFR 16157, PN: J313	5-26
A2A2A1		AGC-AUDIO AMPLIFIER ASSEMBLY, MFR 06845, PN: 666230-959	5-27
A2A2A1C1		CAPACITOR - MIL TYPE CS13BF685M	5-27
A2A2A1C2		CAPACITOR - MIL TYPE CS13BF156M	5-27
A2A2A1C3		CAPACITOR - MIL TYPE CS13BC396K	5-27
A2A2A1C4		SAME AS A2A2C26	5-27
A2A2A1C6		CAPACITOR - MIL TYPE CS13BF226M	5-27
A2A2A1C7		CAPACITOR - MIL TYPE CK16AX223K	5-27
A2A2A1C8		CAPACITOR - MIL TYPE CM05F121G03	5-27
A2A2A1C9		SAME AS A2A2C26	5-27
A2A2A1C10		SAME AS A2A2A1C8	5-27
A2A2A1C11		CAPACITOR, FIXED, METALLIZED PLASTIC FILM, 0.22 DIA × 0.50 IN., 0.01 UF ±20%, 100 VDCW, MFR 00656, PN: V146ZR	5-27
A2A2A1Q4		TRANSISTOR, MFR 04713, PN: 2N706/SM5584	5-27
A2A2A1Q7		TRANSISTOR - MIL TYPE 2N1225	5-27
A2A2A1Q8		SAME AS A2A2A1Q7	5-27
A2A2A1Q9		TRANSISTOR - MIL TYPE 2N652A	5-27
A2A2A1R1		RESISTOR - MIL TYPE RL07S622J	5-27
A2A2A1R5		RESISTOR - MIL TYPE RL07S511J	5-27
A2A2A1R8		RESISTOR - MIL TYPE RL07S621J	5-27
A2A2A1R11		RESISTOR - MIL TYPE RL07S752J	5-27
A2A2A1R14		RESISTOR - MIL TYPE RC07GF682S	5-27
A2A2A1R15		RESISTOR - MIL TYPE RC07S362J	5-27
A2A2A1R16		RESISTOR - MIL TYPE RL07S512J	5-27
A2A2A1R21		RESISTOR - MIL TYPE RC07GF392J	5-27
A2A2A1R23		RESISTOR - MIL TYPE RC07GF153J	5-27
A2A2A1R24		RESISTOR - MIL TYPE RL07S201J	5-27

TABLE 6-1C. SUPPLEMENTARY PARTS LIST (Continued)

RADIO RECEIVER R-1051B/URR

REF DESIG	NOTES	NAME AND DESCRIPTION	FIG. NO.
A2A2A1R30		RESISTOR - MIL TYPE RC07GF101J	5-27
A2A2A1R31		RESISTOR - MIL TYPE RC07GF472J	5-27
A2A2A2		IF AUDIO AMPLIFIER ASSEMBLY, MFR 06845, PN: 666230-949	5-30
A2A2A2C4		SAME AS A2A2C26	5-30
A2A2A2C5		SAME AS A2A2C26	5-30
A2A2A2C7		SAME AS A2A2C26	5-30
A2A2A2C10		SAME AS A2A2C26	5-30
A2A2A2C12		SAME AS A2A2C26	5-30
A2A2A2C13		SAME AS A2A2C26	5-30
A2A2A2C25		CAPACITOR - MIL TYPE CS13BE476K	5-30
A2A2A2L1		COIL - MIL TYPE MS90537-61	5-30
A2A2A2Q7		TRANSISTOR - MIL TYPE 2N2905A	5-30
A2A2A2Q8		SAME AS A2A2A2Q7	5-30
A2A2A2Q9		TRANSISTOR - MIL TYPE 2N1131	5-30
A2A2A2Q10		SAME AS A2A2A2Q9	5-30
A2A2A2R18		RESISTOR - MIL TYPE RL07S620J	5-30
A2A2A2R23		RESISTOR - MIL TYPE RL07S510J	5-30
A2A2A2R25		RESISTOR - MIL TYPE RL07S113J	5-30
A2A2A2R26		SAME AS A2R17	5-30
A2A2A2R28		RESISTOR - MIL TYPE RL07S163J	5-30
A2A2A2R30		RESISTOR - MIL TYPE RL07S622J	5-30
A2A2A2R31		SAME AS A2A2A2R18	5-30
A2A2A2R33		RESISTOR - MIL TYPE RL07S621J	5-30
A2A2A2R35		RESISTOR - MIL TYPE RC07GF121J	5-30
A2A2A2R36		SAME AS A2A2A2R29	5-30
A2A2A3		SSB-AM DETECTOR ASSEMBLY, MFR 06845, PN: 666230-954	5-14
A2A2A3CR1		SAME AS A2A1A1CR1	5-28
A2A2A3CR2		SAME AS A2A2A3CR1	5-28
A2A2A3R1		RESISTOR - MIL TYPE RC07GF120J	5-28
A2A2A3R4		SAME AS A2R9	5-28
A2A2A3R5		RESISTOR - MIL TYPE RL07S202J	5-28
A2A3C26		SAME AS A2A2C26	5-28
A2A3P1		CONNECTOR, RECEPTACLE, ELECTRICAL, 1.54 × 0.49 × 0.61 IN., MFR 91146, PN: DCM25W3DC31	5-28
A2A3T1		TRANSFORMER, AUDIO, 144 OHMS, 40 MA, 75 VDCW, MFR 16157, PN: J313	5-28
A2A3A1		SAME AS A2A2A1	5-27
A2A3A1C4		SAME AS A2A2C26	5-27
A2A3A1C7		SAME AS A2A2A1C7	5-27
A2A3A1C8		SAME AS A2A2A1C8	5-27

TABLE 6-1C. SUPPLEMENTARY PARTS LIST (Continued)

RADIO RECEIVER R-1051B/URR

REF DESIG	NOTES	NAME AND DESCRIPTION	FIG. NO.
A2A3A1C10		SAME AS A2A2A1C8	5-27
A2A3A1C11		SAME AS A2A2A1C11	5-27
A2A3A1Q4		SAME AS A2A2A1Q4	5-27
A2A3A1Q7		SAME AS A2A2A1Q7	5-27
A2A3A1Q8		SAME AS A2A2A1Q8	5-27
A2A3A1Q9		SAME AS A2A2A1Q9	5-27
A2A3A1R5		SAME AS A2A2A1R5	5-27
A2A3A1R14		SAME AS A2A2A1R14	5-27
A2A3A1R21		SAME AS A2A2A1R21	5-27
A2A3A1R23		SAME AS A2A2A1R23	5-27
A2A3A1R31		SAME AS A2A2A1R31	5-27
A2A3A2		SAME AS A2A2A2	5-30
A2A3A2C4		SAME AS A2A2C26	5-30
A2A3A2C5		SAME AS A2A2C26	5-30
A2A3A2C7		SAME AS A2A2C26	5-30
A2A3A2C10		SAME AS A2A2C26	5-30
A2A3A2C12		SAME AS A2A2C26	5-30
A2A3A2C13		SAME AS A2A2C26	5-30
A2A3A2C25		SAME AS A2A2A2C25	5-30
A2A3A2Q7		SAME AS A2A2A2Q7	5-30
A2A3A2Q8		SAME AS A2A2A2Q7	5-30
A2A3A2R26		SAME AS A2R17	5-30
A2A3A2R30		SAME AS A2A2A2R30	5-30
A2A3A2R35		SAME AS A2A2A2R35	5-30
A2A3A2R36		SAME AS A2A2A2R29	5-30
A2A3A3		SAME AS A2A2A3	5-30
A2A3A3CR1		SAME AS A2A2A3CR1	5-30
A2A3A3CR2		SAME AS A2A2A3CR1	5-30
A2A4		AMPLIFIER ASSEMBLY, RF, MFR 06845, PN: 2058994-0501	5-14
A2A4C5		CAPACITOR, FIXED, MICA, 0.46 × 0.37 × 0.21 IN., 231 UUF ±5%, 500 VDCW, MFR 72136, PN: DM1SF231J500V	5-50
A2A4FL1		BEAD, FERRITE, 0.20 OD × 0.10 ID × 0.25 IN., MFR 58189, PN: 666164-347	5-50
A2A4FL2		SAME AS A2A4FL1	5-50
A2A4FL3		SAME AS A2A4FL1	5-50
A2A4K1		TRANSFORMER, ARMATURE, ELECTROMAGNETIC, 9750 OHMS ±10%, 26.5 VDCW, 0.80 × 0.57 × 0.30 IN., MFR 02289, PN: 2B-2110	5-50
A2A4R3		SAME AS A2A2A2R30	5-50
A2A4V1		TUBE, ELECTRON - MIL TYPE 6BZ6	5-50
A2A4V2		TUBE, ELECTRON - MIL TYPE 6AN5WA	5-50

TABLE 6-1C. SUPPLEMENTARY PARTS LIST (Continued)

RADIO RECEIVER R-1051B/URR

REF DESIG	NOTES	NAME AND DESCRIPTION	FIG. NO.
A2A4A1		RF AMPLIFIER SUBASSEMBLY, MFR 06845, PN: 666230-521	5-51
A2A4A1C2		CAPACITOR - MIL TYPE CS13BD156M	5-51
A2A4A1C3		SAME AS A2A4A1C2	5-51
A2A4A1R2		RESISTOR - MIL TYPE RL07S753J	5-51
A2A4A1R4		RESISTOR - MIL TYPE RL20S621J	5-51
A2A4A1R5		RESISTOR - MIL TYPE RC20GF121J	5-51
A2A4A1R6		SAME AS A2A4A1R5	5-51
A2A4A2C4		CAPACITOR, FIXED, MICA, 0.47 × 0.39 × 0.21 IN., 250 UUF ±1/2%, 500 VDCW, MFR 72136, PN: DM15F251D500V	5-49
A2A4A2T1		TRANSFORMER, RF, 12 MC, 115.3 PF, MFR 06845, PN: 2058934-0511	5-49
A2A4A2T2		INDUCTOR, VARIABLE, 12 MC, 131.7 PF, MFR 06845, PN: 2058923-0511	5-49
A2A4A2T3		TRANSFORMER, RF, 7 MC, 197 PF, MFR 06845, PN: 2058931-0506	5-49
A2A4A2T4		TRANSFORMER, RF, 2 MC, 754 PF, MFR 06845, PN: 2058924-0501	5-49
A2A4A3		MEGACYCLE ASSEMBLY, MFR 06845, PN: 666230-287	5-33
A2A4A3T1		TRANSFORMER, RF, 13 MC, 106.1 PF, MFR 06845, PN: 2058934-0512	5-33
A2A4A3T2		INDUCTOR, VARIABLE, 13 MC, 126.7 PF, MFR 06845, PN: 2058923-0512	5-33
A2A4A3T3		TRANSFORMER, RF, 8 MC, 171.9 PF, MFR 06845, PN: 2058931-0527	5-33
A2A4A3T4		TRANSFORMER, RF, 3 MC, 482 PF, MFR 06845, PN: 2058924-0502	5-33
A2A4A4		MEGACYCLE ASSEMBLY, MFR 06845, PN: 666230-288	5-34
A2A4A4T1		TRANSFORMER, RF, 14 MC, 97.9 PF, MFR 06845, PN: 2058934-0513	5-34
A2A4A4T2		INDUCTOR, RF, 14 MC, 119.5 PF, MFR 06845, PN: 2058923-0513	5-34
A2A4A4T3		TRANSFORMER, RF, 9 MC, 152.3 PF, MFR 06845, PN: 2058931-0507	5-34
A2A4A4T4		TRANSFORMER, RF, 4 MC, 358 PF, MFR 06845, PN: 2058924-0503	5-34
A2A4A5		MEGACYCLE ASSEMBLY, MFR 60845, PN: 666230-289	5-35
A2A4A5T1		TRANSFORMER, RF, 15 MC, 92.0 PF, MFR 06845, PN: 2058934-0514	5-35
A2A4A5T2		TRANSFORMER, RF, 15 MC, 113.4 PF, MFR 06845, PN: 2058923-0514	5-35
A2A4A5T3		TRANSFORMER, RF, 10 MC, 138 PF, MFR 06845, PN: 2058931-0508	5-35
A2A4A5T4		TRANSFORMER, RF, 5 MC, 286 PF, MFR 06845, PN: 2058924-0504	5-35
A2A4A6		MEGACYCLE ASSEMBLY, MFR 06845, PN: 666230-290	5-36
A2A4A6T1		TRANSFORMER, RF, 16 MC, 89.9 PF, MFR 06845, PN: 2058934-0515	5-36
A2A4A6T2		INDUCTOR, VARIABLE, 16 MC, 107.1 PF, MFR 06845, PN: 2058923-0515	5-36
A2A4A6T3		TRANSFORMER, RF, 11 MC, 126.5 PF, MFR 06845, PN: 2058931-0509	5-36
A2A4A6T4		TRANSFORMER, RF, 6 MC, 240 PF, MFR 06845, PN: 2058924-0505	5-36
A2A4A7		MEGACYCLE ASSEMBLY, MFR 06845, PN: 666230-291	5-36
A2A4A7T1		TRANSFORMER, RF, 17 MC, 81.3 PF, MFR 06845, PN: 2058934-0516	5-36
A2A4A7T2		INDUCTOR, VARIABLE, 17 MC, 101.7 PF, MFR 06845, PN: 2058923-0516	5-36
A2A4A7T3		TRANSFORMER, RF, 12 MC, 116.4 PF, MFR 06845, PN: 2058931-0510	5-36
A2A4A7T4		TRANSFORMER, RF, 7 MC, 208 PF, MFR 06845, PN: 2058924-0506	5-36

TABLE 6-1C. SUPPLEMENTARY PARTS LIST (Continued)

RADIO RECEIVER R-1051B/URR

REF DESIG	NOTES	NAME AND DESCRIPTION	FIG. NO.
A2A4A8		MEGACYCLE ASSEMBLY, MFR 06845, PN: 666230-292	5-35
A2A4A8T1		TRANSFORMER, RF, 18 MC, 77.8 PF, MFR 06845, PN: 2058934-0517	5-35
A2A4A8T2		INDUCTOR, VARIABLE, 18 MC, 97.0 PF, MFR 06845, PN: 2058923-0517	5-35
A2A4A8T3		TRANSFORMER, RF, 13 MC, 107.8 PF, MFR 06845, PN: 2058931-0511	5-35
A2A4A8T4		TRANSFORMER, RF, 8 MC, 107.8 PF, MFR 06845, PN: 2058924-0507	5-35
A2A4A9		MEGACYCLE ASSEMBLY, MFR 06845, PN: 666230-293	5-37
A2A4A9T1		TRANSFORMER, RF, 19 MC, 73.6 PF, MFR 06845, PN: 2058934-0518	5-37
A2A4A9T2		INDUCTOR, VARIABLE, 19 MC, 93 PF, MFR 06845, PN: 2058923-0518	5-37
A2A4A9T3		TRANSFORMER, RF, 14 MC, 99.4 PF, MFR 06845, PN: 2058931-0512	5-37
A2A4A9T4		TRANSFORMER, RF, 9 MC, 166 PF, MFR 06845, PN: 2058924-0508	5-37
A2A4A10		MEGACYCLE ASSEMBLY, MFR 06845, PN: 666230-294	5-38
A2A4A10T1		TRANSFORMER, RF, 20 MC, 69.9 PF, MFR 06845, PN: 2058934-0519	5-38
A2A4A10T2		INDUCTOR, VARIABLE, 20 MC, 90.3 PF, MFR 06845, PN: 2058923-0519	5-38
A2A4A10T3		TRANSFORMER, RF, 15 MC, 93.5 PF, MFR 06845, PN: 2058931-0512	5-38
A2A4A10T4		TRANSFORMER, RF, 10 MC, 152 PF, MFR 06845, PN: 2058924-0509	5-38
A2A4A11		MEGACYCLE ASSEMBLY, MFR 06845, PN: 666230-295	5-39
A2A4A11T1		TRANSFORMER, RF, 21 MC, 66.7 PF, MFR 06845, PN: 2058934-0520	5-39
A2A4A11T2		INDUCTOR, VARIABLE, 21 MC, 88 PF, MFR 06845, PN: 2058923-0520	5-39
A2A4A11T3		TRANSFORMER, RF, 16 MC, 88.5 PF, MFR 06845, PN: 2058931-0514	5-39
A2A4A11T4		TRANSFORMER, RF, 11 MC, 140 PF, MFR 06845, PN: 2058924-0510	5-39
A2A4A12		MEGACYCLE ASSEMBLY, MFR 06845, PN: 666230-296	5-40
A2A4A12T1		TRANSFORMER, RF, 22 MC, 64.2 PF, MFR 06845, PN: 2058934-0521	5-40
A2A4A12T2		INDUCTOR, VARIABLE, 22 MC, 82.7 PF, MFR 06845, PN: 2058931-0515	5-40
A2A4A12T4		TRANSFORMER, RF, 12 MC, 130 PF, MFR 06845, PN: 2058924-0511	5-40
A2A4A13		MEGACYCLE ASSEMBLY, MFR 06845, PN: 666230-297	5-40
A2A4A13T1		TRANSFORMER, RF, 23 MC, 61.6 PF, MFR 06845, PN: 2058934-0522	5-40
A2A4A13T2		INDUCTOR, VARIABLE, 23 MC, 81.1 PF, MFR 06845, PN: 2058923-0522	5-40
A2A4A13T3		TRANSFORMER, RF, 18 MC, 80.2 PF, MFR 06845, PN: 2058931-0516	5-40
A2A4A13T4		TRANSFORMER, RF, 13 MC, 122 PF, MFR 06845, PN: 2058924-0512	5-40
A2A4A14		MEGACYCLE ASSEMBLY, MFR 06845, PN: 666230-298	5-34
A2A4A14C4		CAPACITOR, FIXED, MICA, 0.45 × 0.36 × 0.18 IN., 75 UUF ±1%, 500 VDCW, MFR 72736, PN: DM15E750F500V	5-34
A2A4A14T1		TRANSFORMER, RF, 24 MC, 59.1 PF, MFR 06845, PN: 2058934-0523	5-34
A2A4A14T2		INDUCTOR, VARIABLE, 24 MC, 78.9 PF, MFR 06845, PN: 2058923-0523	5-34
A2A4A14T3		TRANSFORMER, RF, 19 MC, 76 PF, MFR 06845, PN: 2058931-0517	5-34
A2A4A14T4		TRANSFORMER, RF, 14 MC, 115 PF, MFR 06845, PN: 2058924-0513	5-34
A2A4A15		MEGACYCLE ASSEMBLY, MFR 06845, PN: 666230-299	5-39
A2A4A15T1		TRANSFORMER, RF, 25 MC, 57.4 PF, MFR 06845, PN: 2058934-0524	5-39
A2A4A15T2		TRANSFORMER, RF, 25 MC, 76.6 PF, MFR 06845, PN: 2058923-0524	5-39

TABLE 6-1C. SUPPLEMENTARY PARTS LIST (Continued)

RADIO RECEIVER R-1051B/URR

REF DESIG	NOTES	NAME AND DESCRIPTION	FIG. NO.
A2A4A15T3		TRANSFORMER, RF, 20 MC, 72.6 PF, MFR 06845, PN: 2058931-0518	5-39
A2A4A15T4		TRANSFORMER, RF, 15 MC, 109 PF, MFR 06845, PN: 2058924-0514	5-39
A2A4A16		MEGACYCLE ASSEMBLY, MFR 06845, PN: 666230-300	5-39
A2A4A16T1		TRANSFORMER, RF, 26 MC, 55.9 PF, MFR 06845, PN: 2058934-0525	5-39
A2A4A16T2		INDUCTOR, VARIABLE, 26 MC, 75.9 PF, MFR 06845, PN: 2058923-0525	5-39
A2A4A16T3		TRANSFORMER, RF, 21 MC, 702 PF, MFR 06845, PN: 2058931-0519	5-39
A2A4A16T4		TRANSFORMER, RF, 16 MC, 103 PF, MFR 06845, PN: 2058924-0515	5-39
A2A4A17		MEGACYCLE ASSEMBLY, MFR 06845, PN: 666230-301	5-41
A2A4A17T1		TRANSFORMER, RF, 27 MC, 54.4 PF, MFR 06845, PN: 2058934-0526	5-41
A2A4A17T2		INDUCTOR, VARIABLE, 27 MC, 73.4 PF, MFR 06845, PN: 2058923-0526	5-41
A2A4A17T3		TRANSFORMER, RF, 22 MC, 67.6 PF, MFR 06845, PN: 2058931-0520	5-41
A2A4A17T4		TRANSFORMER, RF, 17 MC, 98.8 PF, MFR 06845, PN: 2058924-0516	5-41
A2A4A18		MEGACYCLE ASSEMBLY, MFR 06845, PN: 666230-302	5-42
A2A4A18T1		TRANSFORMER, RF, 28 MC, 52.6 PF, MFR 06845, PN: 2058934-0527	5-42
A2A4A18T2		INDUCTOR, VARIABLE, 28 MC, 71.9 PF, MFR 06845, PN: 2058923-0527	5-42
A2A4A18T3		TRANSFORMER, RF, 3 MC, 482 PF, MFR 06845, PN: 2058924-0502	5-42
A2A4A18T4		TRANSFORMER, RF, 18 MC, 94.6 PF, MFR 06845, PN: 2058924-0517	5-42
A2A4A19		MEGACYCLE ASSEMBLY, MFR 06845, PN: 666230-303	5-43
A2A4A19T1		TRANSFORMER, RF, 29 MC, 50.4 PF, MFR 06845, PN:2058934-0528	5-43
A2A4A19T2		INDUCTOR, VARIABLE, 29 MC, 69.7 PF, MFR 06845, PN: 2058923-0528	5-43
A2A4A19T3		TRANSFORMER, RF, 24 MC, 62.6 PF, MFR 06845, PN: 2058931-0528	5-43
A2A4A19T4		TRANSFORMER, RF, 19 MC, 90.9 PF, MFR 06845, PN: 2058924-0518	5-43
A2A4A20		MEGACYCLE ASSEMBLY, MFR 06845, PN: 666230-304	5-44
A2A4A20C1		CAPACITOR, FIXED, CERAMIC, 9.1 UUF ±5%, 500 VDCW, MFR 78488, PN: GA9R1J500V	5-44
A2A4A20T1		TRANSFORMER, RF, 2 MC, 763.5 PF, MFR 06845, PN: 2058934-0501	5-44
A2A4A20T2		INDUCTOR, VARIABLE, 2 MC, 771.7 PF, MFR 06845, PN: 2058923-0501	5-44
A2A4A20T3		TRANSFORMER, RF, 25 MC, 61.3 PF, MFR 06845, PN: 2058931-0522	5-44
A2A4A20T4		TRANSFORMER, RF, 20 MC, 87.6 PF, MFR 06845, PN: 2058924-0519	5-44
A2A4A21		MEGACYCLE ASSEMBLY, MFR 06845, PN: 666230-305	5-45
A2A4A21C1		CAPACITOR, FIXED, CERAMIC, 6.2 UUF ±5%, 500 VDCW, MFR 78488, PN: GA6R2J500V	5-45
A2A4A21C2		CAPACITOR, FIXED, MICA, 0.75 × 0.51 × 0.20 IN., 1253 PF ±1/2%, 300 VDCW, MFR 72136, PN: DM20F12530D300V	5-45
A2A4A21C3		CAPACITOR, FIXED, MICA, 0.75 × 0.51 × 0.20 IN., 1247 PF ±1/2%, 300 VDCW, MFR 72136, PN: DM20F12470D300V	5-45
A2A4A21T1		TRANSFORMER, RF, 3 MC, 400.8 PF, MFR 06845, PN: 2058934-0502	5-45
A2A4A21T2		INDUCTOR, VARIABLE, 3 MC, 492.9 PF, MFR 06845, PN: 2058923-0502	5-45
A2A4A21T3		TRANSFORMER, RF, 26 MC, 60.4 PF, MFR 06845, PN: 2058931-0523	5-45
A2A4A21T4		TRANSFORMER, RF, 21 MC, 84.6 PF, MFR 06845, PN: 2058924-0520	5-45

TABLE 6-1C. SUPPLEMENTARY PARTS LIST (Continued)

RADIO RECEIVER R-1051B/URR

REF DESIG	NOTES	NAME AND DESCRIPTION	FIG. NO.
A2A4A22		MEGACYCLE ASSEMBLY, MFR 06845, PN: 666230-306	5-34
A2A4A22C1		CAPACITOR, FIXED, CERAMIC, 5.6 UUF ±5%, 500 VDCW, MFR 78488, PN: GA5R6J500V	5-34
A2A4A22T1		TRANSFORMER, RF, 4 MC, 354.2 PF, MFR 06845, PN: 2058934-0504	5-34
A2A4A22T2		INDUCTOR, VARIABLE, 4 MC, 369.9 PF, MFR 06845, PN: 2058923-0503	5-34
A2A4A22T3		TRANSFORMER, RF, 27 MC, 59.7 PF, MFR 06845, PN: 2058931-0524	5-34
A2A4A22T4		TRANSFORMER, RF, 22 MC, 81.8 PF, MFR 06845, PN: 2058924-0521	5-34
A2A4A23		MEGACYCLE ASSEMBLY, MFR 06845, PN: 666230-307	5-40
A2A4A23T1		TRANSFORMER, RF, 5 MC, 281.5 PF, MFR 06845, PN: 2058934-0504	5-40
A2A4A23T2		INDUCTOR, VARIABLE, 5 MC, 297.4 PF, MFR 06845, PN: 2058923-0504	5-40
A2A4A23T3		TRANSFORMER, RF, 28 MC, 58.9 PF, MFR 06845, PN: 2058931-0525	5-40
A2A4A23T4		TRANSFORMER, RF, 23 MC, 79.3 PF, MFR 06845, PN: 2058924-0522	5-40
A2A4A24		MEGACYCLE ASSEMBLY, MFR 06845, PN: 666230-308	5-46
A2A4A24T1		TRANSFORMER, RF, 6 MC, 232.5 PF, MFR 06845, PN: 2058934-0505	5-48
A2A4A24T2		INDUCTOR, VARIABLE, 6 MC, 250.6 PF, MFR 06845, PN: 2058923-0505	5-48
A2A4A24T3		TRANSFORMER, RF, 29 MC, 57.3 PF, MFR 06845, PN: 2058931-0526	5-48
A2A4A24T4		TRANSFORMER, RF, 24 MC, 77 PF, MFR 06845, PN: 2058924-0523	5-48
A2A4A25		MEGACYCLE ASSEMBLY, MFR 06845, PN: 666230-309	5-47
A2A4A25T1		TRANSFORMER, RF, 7 MC, 197.2 PF, MFR 06845, PN: 2058934-0506	5-46
A2A4A25T2		INDUCTOR, VARIABLE, 7 MC, 216.2 PF, MFR 06845, PN: 2058923-0506	5-46
A2A4A25T3		TRANSFORMER, RF, 2 MC, 750 PF, MFR 06845, PN: 2058931-0501	5-46
A2A4A25T4		TRANSFORMER, RF, 25 MC, 749 PF, MFR 06845, PN: 2058924-0524	5-46
A2A4A26		MEGACYCLE ASSEMBLY, MFR 06845, PN: 666230-310	5-48
A2A4A26T1		TRANSFORMER, RF, 8 MC, 171.7 PF, MFR 06845, PN: 2058934-0507	5-47
A2A4A26T2		INDUCTOR, VARIABLE, 8 MC, 191.1 PF, MFR 06845, PN: 2058923-0507	5-47
A2A4A26T3		TRANSFORMER, RF, 3 MC, 474 PF, MFR 06845, PN: 2058931-0502	5-47
A2A4A26T4		TRANSFORMER, RF, 26 MC, 72.9 PF, MFR 06845, PN: 2058924-0525	5-47
A2A4A27		MEGACYCLE ASSEMBLY, MFR 06845, PN: 666230-311	5-46
A2A4A27T1		TRANSFORMER, RF, 9 MC, 151.7 PF, MFR 06845, PN: 2058934-0508	5-48
A2A4A27T2		INDUCTOR, VARIABLE, 9 MC, 173.3 PF, MFR 06845, PN: 2058923-0508	5-48
A2A4A27T3		TRANSFORMER, RF, 4 MC, 350 PF, MFR 06845, PN: 2058931-0503	5-48
A2A4A27T4		TRANSFORMER, RF, 27 MC, 71.0 PF, MFR 06845, PN: 2058924-0526	5-48
A2A4A28		MEGACYCLE ASSEMBLY, MFR 06845, PN: 666230-312	5-47
A2A4A28T1		TRANSFORMER, RF, 10 MC, 137.8 PF, MFR 06845, PN: 2058934-0509	5-48
A2A4A28T2		INDUCTOR, VARIABLE, 10 MC, 158.4 PF, MFR 06845, PN: 2058923-0509	5-48
A2A4A28T3		TRANSFORMER, RF, 5 MC, 279 PF, MFR 06845, PN: 2058931-0504	5-48
A2A4A28T4		TRANSFORMER, RF, 28 MC, 69.5 PF, MFR 06845, PN: 2058924-0527	5-48
A2A4A29		MEGACYCLE ASSEMBLY, MFR 06845, PN: 666230-313	5-32
A2A4A29T1		TRANSFORMER, RF, 11 MC, 125.9 PF, MFR 06845, PN: 2058934-0510	5-36

TABLE 6-1C. SUPPLEMENTARY PARTS LIST (Continued)

RADIO RECEIVER R-1051B/URR

REF DESIG	NOTES	NAME AND DESCRIPTION	FIG. NO.
A2A4A29T2		INDUCTOR, VARIABLE, 11 MC, 145.7 PF, MFR 06845, PN: 2058923-0510	5-36
A2A4A29T3		TRANSFORMER, RF, 6 MC, 230 PF, MFR 06845, PN: 2058931-0505	5-36
A2A4A29T4		TRANSFORMER, RF, 29 MC, 67.8 PF, MFR 06845, PN: 2058924-0528	5-36
A2A4A30		ROTOR PRINTED CIRCUIT BOARD ASSEMBLY, MFR 06845, PN: 666230-585	5-55
A2A4A31		ROTOR PRINTED CIRCUIT BOARD ASSEMBLY, MFR 06845, PN: 666230-588	5-56
A2A4A32		ROTOR PRINTED CIRCUIT BOARD ASSEMBLY, MFR 06845, PN: 666230-591	5-56
A2A4A33		ROTOR PRINTED CIRCUIT BOARD ASSEMBLY, MFR 06845, PN: 666230-595	5-57
A2A4A34		ROTOR PRINTED CIRCUIT BOARD ASSEMBLY, MFR 06845, PN: 666230-599	5-58
A2A4A35		ROTOR PRINTED CIRCUIT BOARD ASSEMBLY, MFR 06845, PN: 666230-602	5-56
A2A4A36		ROTOR PRINTED CIRCUIT BOARD ASSEMBLY, MFR 06845, PN: 666230-605	5-59
A2A4A37		ROTOR PRINTED CIRCUIT BOARD ASSEMBLY, MFR 06845, PN: 666230-609	5-60
A2A4A38		AMPLIFIER ASSEMBLY, RF MIXER, MFR 06845, PN: 2058989-0501	5-53
A2A4A38C7		SAME AS A2A4C1	5-53
A2A4A38C8		CAPACITOR, FIXED, MICA, 0.46 × 0.36 × 0.19 IN., 470 UUF ±1%, 300 VDCW, MFR 72136, PN: DM15E471F300V	5-53
A2A4A38C9		SAME AS A2A4C1	5-53
A2A4A38C10		SAME AS A2A4C1	5-53
A2A4A38C11		CAPACITOR, FIXED, MICA, 0.46 × 0.27 × 0.19 IN., 180 UUF ±2%, 300 VDCW, MFR 72136, PN: DM15E181G300V	5-53
A2A4A38C12		SAME AS A2A4C1	5-53
A2A4A38FL1		SHIELDING BEAD, FERRITE, 0.1300 × 0.11 IN., MFR 78488, PN: 57-0180	5-53
A2A4A38FL2		SAME AS A2A4A38FL1	5-53
A2A4A38FL3		SAME AS A2A4A38FL1	5-53
A2A4A38P2A4		CONTACT, COAX, MFR 71468, PN: DM53741-5040	5-53
A2A4A38P2A5		SAME AS A2A4A38P2A4	5-53
A2A4A38Q1		TRANSISTOR - MIL TYPE 2N4959	5-53
A2A4A38Q2		SAME AS A2A4A38Q1	5-53
A2A4A38Q3		SAME AS A2A4A38Q1	5-53
A2A4A38R1		RESISTOR - MIL TYPE RC07GF510J	5-53
A2A4A38R2		RESISTOR - MIL TYPE RC07GF102J	5-53
A2A4A38R3		RESISTOR - MIL TYPE RC07GF123J	5-53
A2A4A38R4		RESISTOR - MIL TYPE RC07GF151J	5-53
A2A4A38R5		RESISTOR - MIL TYPE RC07GF220J	5-53
A2A4A38R6		RESISTOR, VARIABLE - MIL TYPE RT24C2P501	5-53

TABLE 6-1C. SUPPLEMENTARY PARTS LIST (Continued)

RADIO RECEIVER R-1051B/URR

REF DESIG	NOTES	NAME AND DESCRIPTION	FIG. NO.
A2A4A38R7		RESISTOR - MIL TYPE RC07GF101J	5-53
A2A4A38R8		SAME AS A2A4A38R7	5-53
A2A4A38R9		RESISTOR - MIL TYPE RC07GF332J	5-53
A2A4A38R10		RESISTOR - MIL TYPE RC07GF622J	5-53
A2A4A38R11		RESISTOR - MIL TYPE RC07GF511J	5-53
A2A4A38R12		SAME AS A2A4A38R5	5-53
A2A4A38R13		RESISTOR - MIL TYPE RC07GF471J	5-53
A2A4A38R14		SAME AS A2A4A38R7	5-53
A2A4A38R15		SAME AS A2A4A38R1	5-53
A2A4A38R16		SAME AS A2A4A38R9	5-53
A2A4A38R17		SAME AS A2A4A38R10	5-53
A2A4A38R18		SAME AS A2A4A38R11	5-53
A2A4A38R19		RESISTOR - MIL TYPE RC07GF390J	5-53
A2A4A38R20		RESISTOR - MIL TYPE RC07GF620J	5-53
A2A4A38R21		SAME AS A2A4A38R1	5-53
A2A4A38R22		RESISTOR - MIL TYPE RC07GF330J	5-53
A2A4A38T1		TRANSFORMER, 0.50 × 0.50 × 0.23 IN., 1/2W, 50 OHMS, 1 TO 50 MHz, MFR 03550, PN: 15501	5-53
A2A5		FREQUENCY STANDARD ASSEMBLY, MFR 14844, PN: FE2040A	5-15A
A2A5A1		OSCILLATOR ASSEMBLY, PRINTED CIRCUIT BOARD, MFR 06845, PN: 2058847-0502	5-61
A2A5A1CR1		DIODE - MIL TYPE 1N758A	5-61
A2A5A1CR2		DIODE - MIL TYPE 1N914	5-61
A2A5A1C1		CAPACITOR, FIXED, MICA, 0.47 × 0.39 × 0.21 IN., 680 UUF ±5%, 300 VDCW, MFR 72136, PN: DM15E680J300V	5-61
A2A5A1C2	*	CAPACITOR, VARIABLE, 0.31 DIA × 1.59 IN., 10 - 15 PF, 750 VDCW, MFR 73899, PN: VCJ14890	5-61
A2A5A1C2	*	CAPACITOR, VARIABLE, 0.31 DIA × 1.08 IN., 8 - 12 PF, 750 VDCW, MFR 18736, PN: V1502	5-61
		NOTE: ITEMS MARKED (*) ARE SELECTED TO MEET UNIT SPECIFICATIONS	
A2A5A1C3		CAPACITOR, VARIABLE, CERAMIC, 0.38 DIA × 0.27 IN., 15 - 60 PF, 100 VDCW, MFR 73899, PN: DV01PR60Q	5-61
A2A5A1C4		CAPACITOR, FIXED, MICA, 0.33 × 0.24 × 0.15 IN., 180 PF ±5%, 500 VDCW, MFR 72136, PN: DM10F181J0500WV1CR	5-61
A2A5A1C5		CAPACITOR, FIXED, MICA, 0.34 × 0.25 × 0.16 IN., 220 PF ±5%, 500 VDCW, MFR 72136, PN: DM10F221J0500WV1CR	5-61
A2A5A1C6		CAPACITOR, FIXED, CERAMIC, 0.40 DIA × 0.15 IN., 0.05 UUF +80% -20%, 20 VDCW, MFR 71590, PN: DA-486-001B	5-61
A2A5A1C7		CAPACITOR - MIL TYPE CS13BD335M	5-61
A2A5A1C8		CAPACITOR, FIXED, MICA, 0.32 × 0.23 × 0.13 IN., 82 PF ±5%, 500 VDCW, MFR 72136, PN: DM10E820J0500WV1CR	5-61

TABLE 6-1C. SUPPLEMENTARY PARTS LIST (Continued)

RADIO RECEIVER R-1051B/URR

REF DESIG	NOTES	NAME AND DESCRIPTION	FIG. NO.
A2A5A1C9		SAME AS A2A5A1C6	5-61
A2A5A1C10		CAPACITOR, FIXED, PLASTIC, 0.17 DIA × 3.00 IN., 0.01 UF ±10%, 200 VDCW, MFR 56289, PN: 192P10392	5-61
A2A5A1C11		CAPACITOR, FIXED, MICA, 0.31 × 0.23 × 0.13 IN., 62 PF ±5%, 500 VDCW, MFR 71590, PN: DA-484-001B	5-61
A2A5A1C12		CAPACITOR - MIL TYPE CS13BD335M	5-61
A2A5A1Q1		TRANSISTOR - MIL TYPE 2N706	5-61
A2A5A1Q2		SAME AS A2A5A1Q1	5-61
A2A5A1Q3		SAME AS A2A5A1Q1	5-61
A2A5A1Q4		SAME AS A2A5A1Q1	5-61
A2A5A1Q5		SAME AS A2A5A1Q1	5-61
A2A5A1Q6		TRANSISTOR - MIL TYPE 2N2907	5-61
A2A5A1Q7		TRANSISTOR - MIL TYPE 2N697	5-61
A2A5A1R1		RESISTOR - MIL TYPE RC07GF124K	5-61
A2A5A1R2		RESISTOR - MIL TYPE RL07S510J	5-61
A2A5A1R3		RESISTOR - MIL TYPE RL07S102J	5-61
A2A5A1R4		RESISTOR - MIL TYPE RC07GF823K	5-61
A2A5A1R5		RESISTOR - MIL TYPE RC07GF153K	5-61
A2A5A1R6		RESISTOR - MIL TYPE RC07GF470K	5-61
A2A5A1R7		RESISTOR - MIL TYPE RC07GF152K	5-61
A2A5A1R8		RESISTOR - MIL TYPE RC07GF102K	5-61
A2A5A1R9		RESISTOR, FIXED, WIREWOUND, 0.12 DIA× 0.38 IN., 820 OHMS ±5%, 1W, MFR 56289, PN: 239E8215	5-61
A2A5A1R10		RESISTOR - MIL TYPE RC07GF273K	5-61
A2A5A1R11		RESISTOR - MIL TYPE RC07GF103K	5-61
A2A5A1R12		RESISTOR - MIL TYPE RC07GF271K	5-61
A2A5A1R13		RESISTOR - MIL TYPE RL07S472J	5-61
A2A5A1R14		SAME AS A2A5A1R13	5-61
A2A5A1R15		RESISTOR, VARIABLE, WIREWOUND, 0.75 × 0.31 × 0.16 IN., 1,000 OHMS ±10%, 1W, MFR 80294, PN: 3007P-1-102	5-61
A2A5A1R16		RESISTOR - MIL TYPE RL07S432J	5-61
A2A5A1R17		RESISTOR - MIL TYPE RC07GF123K	5-61
A2A5A1R18		SAME AS A2A5A1R17	5-61
A2A5A1R19		SAME AS A2A5A1R11	5-61
A2A5A1R20		SAME AS A2A5A1R11	5-61
A2A5A1R21		RESISTOR - MIL TYPE RC07GF222K	5-61
A2A5A1R22		RESISTOR - MIL TYPE RC07GF331K	5-61
A2A5A1R23		RESISTOR - MIL TYPE RC07GF125K	5-61
A2A5A1R24		SAME AS A2A5A1R21	5-61
A2A5A1Y1		CRYSTAL, QUARTZ, 5.0 MC, 75 PF ±0.005%, MFR 14844, PN: FE-188A	5-61

TABLE 6-1C. SUPPLEMENTARY PARTS LIST (Continued)

RADIO RECEIVER R-1051B/URR

REF DESIG	NOTES	NAME AND DESCRIPTION	FIG. NO.
A2A5A2		REGENERATIVE MULTIPLIER AND DIVIDER ASSEMBLY, PRINTED CIRCUIT BOARD, MFR 06845, PN: 2058828-0502	5-62
A2A5A2CR1		DIODE - MIL TYPE 1N914	5-62
A2A5A2CR2		SAME AS A2A5A2CR1	5-62
A2A5A2C1		CAPACITOR - MIL TYPE CK60AW102M	5-62
A2A5A2C2		CAPACITOR, FIXED, MICA, 0.30 × 0.24× 0.16 IN., 300 PF ±5%, 500 VDCW, MFR 72136, PN: DM10F301J0300WV1CR	5-62
A2A5A2C3		CAPACITOR, FIXED, CERAMIC, 0.40 DIA × 0.15 IN., 0.05 UUF +80% -20%, 20 VDCW, MFR 71590, PN: DA-486-001B	5-62
A2A5A2C4		SAME AS A2A5A2C3	5-62
A2A5A2C5		SAME AS A2A5A2C1	5-62
A2A5A2C6		SAME AS A2A5A2C3	5-62
A2A5A2C7		CAPACITOR, VARIABLE, CERAMIC, 9-13 UUF, 100 VDCW, MFR 73899, PN: DV01PS350	5-62
A2A5A2C8		CAPACITOR, FIXED, MICA, 0.60 × 0.46 × 0.17 IN., 1500 PF ±5%, 500 VDCW, MFR 72136, PN: DM15F681J0300WV1CR	5-62
A2A5A2C9		CAPACITOR, FIXED, MICA, 0.34 × 0.25 × 0.16 IN., 220 PF ±5%, 500 VDCW, MFR 72136, PN: DM10F221J0500WV1CR	5-62
A2A5A2C10		SAME AS A2A5A1C10	5-62
A2A5A2C11		SAME AS A2A5A1C6	5-62
A2A5A2C12		CAPACITOR, FIXED, MICA, 0.31 × 0.23 × 0.12 IN., 30 PF ±5%, 500 VDCW, MFR 72136, PN: DM10E300J0500WV1CR	5-62
A2A5A2C13		SAME AS A2A5A2C7	5-62
A2A5A2C14		SAME AS A2A5A2C1	5-62
A2A5A2C15		SAME AS A2A5A2C11	5-62
A2A5A2C16		CAPACITOR, VARIABLE, CERAMIC, 15-60 UUF, 100 VDCW, MFR 73899, PN: DV01PS60Q	5-62
A2A5A2C17		SAME AS A2A5A2C1	5-62
A2A5A2C18		CAPACITOR, FIXED, MICA, 0.62 × 0.46 × 0.17 IN., 1500 PF ±5%, 500 VDCW, MFR 72136, PN: DM19F152J0500WV1CR	5-62
A2A5A2C19		CAPACITOR, FIXED, MICA, 0.45 × 0.31 × 0.16 IN., 680 PF ±5%, 300 VDCW, MFR 72136, PN: DMF681J0300WV1CR	5-62
A2A5A2C20		SAME AS A2A5A2C11	5-62
A2A5A2C21		CAPACITOR, FIXED, MICA, 0.33 × 0.21 × 0.15 IN., 330 PF ±5%, 100 VDCW, MFR 72136, PN: DM10F331J0100WV1CR	5-62
A2A5A2C22		SAME AS A2A5A2C16	5-62
A2A5A2C23		CAPACITOR, FIXED, MICA, 0.32 × 0.24 × 0.14 IN., 150 PF ±5%, 500 VDCW, MFR 72136, PN: DM10F151J0500WV1CR	5-62
A2A5A2C24		SAME AS A2A5A2C11	5-62
A2A5A2C25		SAME AS A2A5A2C1	5-62
A2A5A2C26		SAME AS A2A5A2C11	5-62
A2A5A2C27		CAPACITOR, FIXED, MICA, 0.32 × 0.23 × 0.13 IN., 68 UUF ±5%, 500 VDCW, MFR 72136, PN: DM10E680J0500WV1CR	5-62

TABLE 6-1C. SUPPLEMENTARY PARTS LIST (Continued)

RADIO RECEIVER R-1051B/URR

REF DESIG	NOTES	NAME AND DESCRIPTION	FIG. NO.
A2A5A2C28		CAPACITOR, FIXED, MICA, 0.31 × 0.23 × 0.12 IN., 33 UUF ±5%, 500 VDCW, MFR 72136, PN: DM10E330J0500WV1CR	5-62
A2A5A2C29		SAME AS A2A5A2C11	5-62
A2A5A2C30		SAME AS A2A5A2C28	5-62
A2A5A2C31		SAME AS A2A5A2C7	5-62
A2A5A2C32		SAME AS A2A5A2C18	5-62
A2A5A2C33		SAME AS A2A5A2C7	5-62
A2A5A2C34		SAME AS A2A5A2C6	5-62
A2A5A2C35		SAME AS A2A5A2C27	5-62
A2A5A2C36		SAME AS A2A5A2C6	5-62
A2A5A2C37		CAPACITOR, FIXED, MICA, 0.31 × 0.23 × 0.12 IN., 56 UUF ±5%, 500 VDCW, MFR 72136, PN: DM10E560J0500WV1CR	5-62
A2A5A2C38		SAME AS A2A5A2C26	5-62
A2A5A2C39		CAPACITOR, FIXED, MICA, 0.32 × 0.23 × 0.13 IN., 91 UUF ±5%, 500 VDCW, MFR 72136, PN: DM10F910J0500WV1CR	5-62
A2A5A2C40		CAPACITOR, FIXED, MICA, 0.62 × 0.46 × 0.17 IN., 1200 UUF ±5%, 500 VDCW MFR 72136, PN: DM19F122J0500WV1CR	5-62
A2A5A2C41		SAME AS A2A5A2C1	5-62
A2A5A2C42		SAME AS A2A5A2C6	5-62
A2A5A2C43		SAME AS A2A5A2C1	5-62
A2A5A2C44		CAPACITOR, FIXED, MICA,0.31 × 0.23 × 0.12 IN., 51 PF ±5% 500 VDCW, MFR 72136, PN: DM10E510J0500WV1CR	5-62
A2A5A2DS1		LAMP, INDICATOR, MFR 58854, PN: 10ES	5-62
A2A5A2L1		COIL, RF, 10 UH ±10%, 0.25W, MFR 99800, PN: 1537-36	5-62
A2A5A2L2		COIL, RF, 6.8 UH ±10%, 0.25W, MFR 99800, PN: 1537-32	5-62
A2A5A2L3		COIL, RF, 200 UH ±5%, 0.22W, MFR 99800, PN: 1537-90	5-62
A2A5A2L4		COIL, RF, 120 UH ±5%, 0.22W, MFR 99800, PN: 1537-80	5-62
A2A5A2Q1		TRANSISTOR - MIL TYPE 2N706	5-62
A2A5A2Q2		SAME AS A2A5A2Q1	5-62
A2A5A2Q3		SAME AS A2A5A2Q1	5-62
A2A5A2Q4		SAME AS A2A5A2Q1	5-62
A2A5A2Q5		SAME AS A2A5A2Q1	5-62
A2A5A2Q6		SAME AS A2A5A2Q1	5-62
A2A5A2Q7		SAME AS A2A5A2Q1	5-62
A2A5A2Q8		SAME AS A2A5A2Q1	5-62
A2A5A2Q9		SAME AS A2A5A2Q1	5-62
A2A5A2Q10		SAME AS A2A5A2Q1	5-62
A2A5A2Q11		SAME AS A2A5A2Q1	5-62
A2A5A2R1		RESISTOR - MIL TYPE RC07GF102K	5-62
A2A5A2R2		RESISTOR - MIL TYPE RC07GF103K	5-62
A2A5A2R3		RESISTOR - MIL TYPE RC07GF333K	5-62

TABLE 6-1C. SUPPLEMENTARY PARTS LIST (Continued)

RADIO RECEIVER R-1051B/URR

REF DESIG	NOTES	NAME AND DESCRIPTION	FIG. NO.
A2A5A2R4		RESISTOR - MIL TYPE RC07GF222K	5-62
A2A5A2R5		SAME AS A2A5A2R3	5-62
A2A5A2R6		RESISTOR - MIL TYPE RC07GF103K	5-62
A2A5A2R7		SAME AS A2A5A2R4	5-62
A2A5A2R8		RESISTOR - MIL TYPE RC07GF821K	5-62
A2A5A2R9		RESISTOR - MIL TYPE RC07GF152K	5-62
A2A5A2R10		RESISTOR - MIL TYPE RC07GF472K	5-62
A2A5A2R11		SAME AS A2A5A2R1	5-62
A2A5A2R12		SAME AS A2A5A2R2	5-62
A2A5A2R13		RESISTOR - MIL TYPE RC07GF392K	5-62
A2A5A2R14		RESISTOR - MIL TYPE RC07GF683K	5-62
A2A5A2R15		RESISTOR - MIL TYPE RC07GF683K	5-62
A2A5A2R16		RESISTOR - MIL TYPE RC07GF561K	5-62
A2A5A2R17		RESISTOR - MIL TYPE RC07GF101K	5-62
A2A5A2R18	*	RESISTOR - MIL TYPE RC07GF K	5-62
A2A5A2R19		SAME AS A2A5A2R2	5-62
A2A5A2R20		SAME AS A2A5A2R3	5-62
A2A5A2R21		SAME AS A2A5A2R2	5-62
A2A5A2R23		SAME AS A2A5A2R10	5-62
A2A5A2R24		SAME AS A2A5A2R10	5-62
A2A5A2R25		SAME AS A2A5A2R10	5-62
A2A5A2R26		SAME AS A2A5A2R4	5-62
A2A5A2R27		RESISTOR - MIL TYPE RC07GF273K	5-62
A2A5A2R28		SAME AS A2A5A2R2	5-62
A2A5A2R29		SAME AS A2A5A2R1	5-62
A2A5A2R30		RESISTOR - MIL TYPE RC07GF151K	5-62
A2A5A2R31	*	RESISTOR - MIL TYPE RC07GF K	5-62
		NOTE: ITEMS MARKED (*) ARE SELECTED TO MEET UNIT SPECIFICATIONS.	
A2A5A2R32		SAME AS A2A5A2R1	5-62
A2A5A2R33		RESISTOR - MIL TYPE RC07GF681K	5-62
A2A5A2R34		SAME AS A2A5A2R3	5-62
A2A5A2R36		SAME AS A2A5A2R4	5-62
A2A5A2R39		SAME AS A2A5A2R9	5-62
A2A5A2R40		SAME AS A2A5A2R27	5-62
A2A5A2R41		SAME AS A2A5A2R10	5-62
A2A5A2R42		SAME AS A2A5A2R8	5-62
A2A5A2R43		RESISTOR - MIL TYPE RC07GF471K	5-62
A2A5A2R44		RESISTOR - MIL TYPE RC07GF5R6K	5-62

TABLE 6-1C. SUPPLEMENTARY PARTS LIST (Continued)

RADIO RECEIVER R-1051B/URR

REF DESIG	NOTES	NAME AND DESCRIPTION	FIG. NO.
A2A5A2R45		SAME AS A2A5A2R2	5-62
A2A5A2R46		SAME AS A2A5A2R2	5-62
A2A5A2R47		RESISTOR - MIL TYPE RC07GF104K	5-62
A2A5A2R48		SAME AS A2A5A2R1	5-62
A2A5A2R49		RESISTOR - MIL TYPE RC07GF470K	5-62
A2A5A2R51		RESISTOR - MIL TYPE RC07GF473K	5-62
A2A5A2R52		SAME AS A2A5A2R2	5-62
A2A5A2R53		RESISTOR - MIL TYPE RC07GF822K	5-62
A2A5A2R54		RESISTOR - MIL TYPE RC07GF271K	5-62
A2A5A2R55		SAME AS A2A5A2R1	5-62
A2A5A2R56		SAME AS A2A5A2R2	5-62
A2A5A2R57		SAME AS A2A5A2R16	5-62
A2A5A2R58		SAME AS A2A5A2R4	5-62
A2A5A2R60		SAME AS A2A5A2R33	5-62
A2A5A2R61		SAME AS A2A5A2R1	5-62
A2A5A2R62		SAME AS A2A5A2R2	5-62
A2A5A2S1		SWITCH, ROTARY, WAFER, 1 SECTION, 3 POSITION, 30° INDEXING, 250 MA, 28 VDCW, MFR 71450, PN: 19654-1	5-62
A2A5A2T1		TRANSFORMER, RF, MFR 14844, PN: B5216-946	5-62
A2A5A2T2		TRANSFORMER, RF, MFR 14844, PN: B5215-946	5-62
A2A5A2T3		TRANSFORMER, RF, MFR 14844, PN: B1537-36	5-62
A2A5A3		OVEN ASSEMBLY, MFR 14844, PN: D5234-946B	5-63
A2A5A3Q1		TRANSISTOR - MIL TYPE 2N706	5-63
A2A5A3R1		RESISTOR, FIXED, CARBON, 82 OHMS ±2%	5-63
A2A5A3R2		RESISTOR, THERMAL, 3.9K ±10%	5-63
A2A6		TRANSLATOR-SYNTHESIZER SUBASSEMBLY, MFR 06845, PN: 2058940-0502	5-14
A2A6C1		CAPACITOR - MIL TYPE CS13F470K	5-14
A2A6C2		SAME AS A2A6C1	5-14
A2A6J4		CONNECTOR, RECEPTACLE, ELECTRICAL, 2.08 × 0.42 × 0.62 IN., 17 CONTACTS, MFR 71468, PN: DBMF17W2S2C31	5-14
A2A6J5		CONNECTOR, RECEPTACLE, ELECTRICAL, 2.08 × 0.42 × 0.62 IN., 13 CONTACTS, MFR 71468, PN: DBMF13W3S2C31	5-14
A2A6J6		CONNECTOR, RECEPTACLE, ELECTRICAL, 2.08 × 0.42 × 0.62 IN., 9 CONTACTS, MFR 71468, PN: DBMF9W4S2C31	5-14
A2A6P1		CONNECTOR, PLUG, ELECTRICAL, 2.72 × 0.42 × 0.62 IN., 25 CONTACTS, MFR 71468, PN: DCM25W3P	5-14
A2A6P2		CONNECTOR, PLUG, ELECTRICAL, 1.54 × 0.42 × 0.62 IN., 3 CONTACTS, MFR 71468, PN: DAM3W3P	5-14
A2A6P3		SAME AS A2A6P2	5-14
A2A6P7		CONNECTOR, PLUG, ELECTRICAL, RED, 0.14 DIA × 0.34 IN., MFR 98291, PN: SKT-14	5-14

TABLE 6-1C. SUPPLEMENTARY PARTS LIST (Continued)

RADIO RECEIVER R-1051B/URR

REF DESIG	NOTES	NAME AND DESCRIPTION	FIG. NO.
A2A6P8		CONNECTOR, PLUG, ELECTRICAL, GREEN, 0.14 DIA × 0.34 IN., MFR 98291, PN: SKT-14	5-14
A2A6P9		CONNECTOR, PLUG, ELECTRICAL, ORANGE, 0.14 DIA × 0.34 IN., MFR 98291, PN: SKT-14	5-14
A2A6P10		CONNECTOR, PLUG, ELECTRICAL, GRAY, 0.14 DIA × 0.34 IN., MFR 98291, PN: SKT-14	5-14
A2A6P11		CONNECTOR, PLUG, ELECTRICAL, RT ANGLE, 0.63 × 0.53 IN., MFR 06845, PN: 559998-273	5-14
A2A6P12		SAME AS A2A6P11	5-14
A2A6P13		CONNECTOR, PLUG, ELECTRICAL, MFR 06845, PN: 559998-299	5-14
A2A6P14		SAME AS A2A6P11	5-14
A2A6P15		SAME AS A2A6P7	5-14
A2A6P16		SAME AS A2A6P11	5-14
A2A6P17		SAME AS A2A6P11	5-14
A2A6P18		SAME AS A2A6P11	5-14
A2A6P19		CONNECTOR, PLUG, ELECTRICAL, RT ANGLE, 0.63 × 0.53 IN., MFR 06845, PN: 559998-093	5-14
A2A6P21		SAME AS A2A6P19	5-14
A2A6P22		SAME AS A2A6P11	5-14
A2A6P23		SAME AS A2A6P11	5-14
A2A6P24		SAME AS A2A6P11	5-14
A2A6P25		SAME AS A2A6P11	5-14
A2A6P26		SAME AS A2A6P7	5-14
A2A6A1		SYNTHESIZER ASSEMBLY, 1 MC, MFR 58189, PN: 666230-767	5-65
A2A6A1B1		MOTOR, PERMANENT MAGNET, 0.5 AMP, 26 VDCW, MFR 58189, PN: 666163-435	5-61
A2A6A1CR1		DIODE - MIL TYPE 1N975B	5-68
A2A6A1C1		SAME AS A2A4A1C1 (LOCATED ON SPECTRUM GENERATOR MIXER)	5-68
A2A6A1C2		CAPACITOR, MIL TYPE CS13BF685K (LOCATED ON IF/DC AMPLIFIER)	5-68
A2A6A1C5		CAPACITOR, FIXED, MICA, 0.47 × 0.38 × 0.20 IN., 500 UUF ±1%, 300 VDCW, MFR 72136, PN: DM15F500F300V	5-68
A2A6A1C18	*	SAME AS A2A6A1C3	5-68
A2A6A1C18	*	SAME AS A2A6A1C4	5-68
A2A6A1C18	*	SAME AS A2A6A1C5	5-68
A2A6A1C18	*	SAME AS A2A6A1C6	5-68
A2A6A1C18	*	SAME AS A2A6A1C7	5-68
A2A6A1C18	*	SAME AS A2A6A1C8	5-68
A2A6A1C18	*	SAME AS A2A6A1C9	5-68
A2A6A1C18	*	SAME AS A2A6A1C10	5-68
A2A6A1C18	*	SAME AS A2A6A1C11	5-68
		NOTE: ITEMS MARKED (*) ARE SELECTED TO MEET UNIT SPECIFICATIONS.	

TABLE 6-1C. SUPPLEMENTARY PARTS LIST (Continued)

RADIO RECEIVER R-1051B/URR

REF DESIG	NOTES	NAME AND DESCRIPTION	FIG. NO.
A2A6A1C18	*	SAME AS A2A6A1C12	5-68
A2A6A1C18	*	SAME AS A2A5A1C23	5-68
A2A6A1C18	*	SAME AS A2A6A1C15	5-68
A2A6A1C18	*	SAME AS A2A6A1C16	5-68
A2A6A1C18	*	SAME AS A2A6A1C17	5-68
A2A6A1C18	*	CAPACITOR, FIXED, MICA, 0.46 × 0.38 × 0.22 IN., 750 UUF ±20%, 300 VDCW, MFR 72136, PN: DM15E751F300V	5-68
		NOTE: ITEMS MARKED (*) ARE SELECTED TO MEET UNIT SPECIFICATIONS.	
A2A6A1K1		RELAY, ELECTROMAGNETIC, 0.80 × 0.87 × 0.37 IN., 975 OHMS ±10%, 26.5 VDCW, MFR 02289, PN: 2B-2110	5-68
A2A6A1L1		COIL, RF - MIL TYPE MS90537-49	5-68
A2A6A1L2		SAME AS A2A6A1L1	5-68
A2A6A1P1		CONNECTOR, PLUG, ELECTRICAL, 2.08 × 0.49 × 0.62 IN., 17 CONTACTS, MFR 71468, PN: DBM17W2P	5-68
A2A6A1S1		SWITCH, ROTARY, 2 AMP, 28 VDCW, 0.0150 OHMS, MFR 76854, PN: 806285-010	5-68
A2A6A1A1		OSCILLATOR ASSEMBLY, MFR 06845, PN: 666230-158	5-66
A2A6A1A1CR1		SAME AS A2A1A3CR2	5-66
A2A6A1A1CR2		SAME AS A2A6A1A1CR1	5-66
A2A6A1A1CR3		SEMICONDUCTOR DEVICE, DIODE, 0.125 DIA × 0.30 IN., MFR 73293, PN: H7171	5-66
A2A6A1A1C21		CAPACITOR, FIXED, MICA, 0.45 × 0.36 × 0.18 IN., 110 UUF ±2%, 300 VDCW, MFR 72136, PN: DM15E110F300V	5-66
A2A6A1A1C24		CAPACITOR, FIXED, MICA, 0.46 × 0.38 × 0.20 IN., 240 UUF ±2%, 300 VDCW, MFR 72136, PN: DM15E240F300V	5-66
A2A6A1A1L2		COIL, RF, MIL TYPE MS75008-44	5-100
A2A6A1A1R3		RESISTOR - MIL TYPE RL07S133J	5-66
A2A6A1A1R5		SAME AS A2A6A1A1R3	5-66
A2A6A1A1R12		RESISTOR - MIL TYPE RL07S911J	5-66
A2A6A1A1R14		RESISTOR - MIL TYPE RC07GF122J	5-66
A2A6A1A2		IF/DC AMPLIFIER ASSEMBLY, MFR 06845, PN: 666230-148	5-66
A2A6A1A2CR1		SAME AS A2A1A1CR1	5-67
A2A6A1A2C7		CAPACITOR, FIXED, MICA, 0.73 × 0.47 × 0.13 IN., 100 UF ±5%, 500 VDCW, MFR 72136, PN: DM20E1020G500V	5-67
A2A6A1A2L1		COIL, RF - MIL TYPE MS90537-32	5-67
A2A6A1A2L2		COIL, RF - MIL TYPE MS90537-35	5-67
A2A6A1A2L3		COIL, RF - MIL TYPE MS90537-30	5-67
A2A6A1A2Q1		SAME AS A2A1A3Q1	5-67
A2A6A1A2Q2		SAME AS A2A1A3Q1	5-67
A2A6A1A2Q3		TRANSISTOR - MIL TYPE 2N2222	5-67

TABLE 6-1C. SUPPLEMENTARY PARTS LIST (Continued)

RADIO RECEIVER R-1051B/URR

REF DESIG	NOTES	NAME AND DESCRIPTION	FIG. NO.
A2A6A1A2R6		RESISTOR, VARIABLE, 0.50 × 0.50 × 0.21 IN., 1.0 at 70°C, MFR 80294, PN: 3250W-1-201	5-67
A2A6A1A2R15		RESISTOR - MIL TYPE RL07S133J	5-67
A2A6A1A2R16		SAME AS A2A6A1A2R15	5-67
A2A6A1A2R18		RESISTOR - MIL TYPE RL07S131J	5-67
A2A6A1A2R20		RESISTOR - MIL TYPE RL07S750J	5-67
A2A6A1A3		SPECTRUM GENERATOR MIXER ASSEMBLY, MFR 06845, PN: 666230-152	5-69
A2A6A1A3Q4		TRANSISTOR, MFR 80131, PN: 2N3127	5-69
A2A6A1A3Q5		SAME AS A2A6A1A3Q4	5-69
A2A6A1A3R1		RESISTOR - MIL TYPE RL07S511J	5-69
A2A6A1A3TP1		TERMINAL, FEEDTHRU, 0.93 DIA × 0.55 IN., MFR 06845, PN: 540029-105	5-69
A2A6A2		SYNTHESIZER ASSEMBLY, 100 KC, MFR 06845, PN: 2058995-0501	5-70
A2A6A2C1		CAPACITOR, FIXED, CERAMIC, 0.30 × 0.30 × 0.10 IN., 10K ±20%, 200 VDCW, MFR 58189, PN: 698104-103	5-70
A2A6A2L1		COIL, RF - MIL TYPE MS90537-30	5-70
A2A6A2P1		CONNECTOR, PLUG, ELECTRICAL, 2.72 × 0.49 × 0.61 IN., 9 CONTACTS, MFR 71468, PN: DBM9W4PC31	5-70
A2A6A2A1CR1		SAME AS A2A1A3CR2	5-73
A2A6A2A1CR2		SAME AS A2A6A2A1CR1	5-73
A2A6A2A1R2		RESISTOR - MIL TYPE RL07S133J	5-73
A2A6A2A1R3		SAME AS A2A6A2A1R2	5-73
A2A6A2A1R4		RESISTOR - MIL TYPE RL07S201J	5-73
A2A6A2A1R8		RESISTOR, FIXED, COMPOSITE, 5.1 OHMS ±5%, 1/4 WATT, MFR 06845, PN: 666231-644	5-73
A2A6A2A1R13		RESISTOR - MIL TYPE RC07GF561J	5-73
A2A6A2A1R14		RESISTOR - MIL TYPE RL07S431J	5-73
A2A6A2A2		MIXER BOARD ASSEMBLY, 10.747 MC, MFR 06845, PN: 666230-864	5-77
A2A6A2A2Q1		SAME AS A2A6A1A3Q4	5-77
A2A6A2A2Q2		SAME AS A2A6A1A3Q4	5-77
A2A6A2A2R1		RESISTOR - MIL TYPE RL07S133J	5-77
A2A6A2A2R7		SAME AS A2A2A1R12	5-77
A2A6A2A2T1		TRANSFORMER, RF, 0.42 DIA × 0.62 IN., 37 UH ±10%, 25 MC, MFR 06845, PN: 2058848-0506	5-77
A2A6A2A2T2		TRANSFORMER, RF, 0.42 DIA × 0.62 IN., 37 UH ±10%, 10.74 MC, MFR 06845, PN: 2058848-0507	5-77
A2A6A2A3		MIXER ASSEMBLY, 17.847 - 27.847 MC, MFR 06845, PN: 666230-869	5-71
A2A6A2A3C8		CAPACITOR - MIL TYPE PC41J4R5	5-71
A2A6A2A3Q1		SAME AS A2A6A1A3Q4	5-71
A2A6A2A3Q2		SAME AS A2A6A1A3Q4	5-71
A2A6A2A3R12		RESISTOR - MIL TYPE RL07S911J	5-71

TABLE 6-1C. SUPPLEMENTARY PARTS LIST (Continued)

RADIO RECEIVER R-1051B/URR

REF DESIG	NOTES	NAME AND DESCRIPTION	FIG. NO.
A2A6A2A3R13		RESISTOR - MIL TYPE RL07S510J	5-71
A2A6A2A3R14		RESISTOR - MIL TYPE RL07S292J	5-71
A2A6A2A3R16		RESISTOR - MIL TYPE RC07GF680J	5-71
A2A6A2A3T1		TRANSFORMER, RF, 0.42 × 0.62 IN., 1.18 UH, 7.9 MC, MFR 06845, PN: 2058848-0510	5-71
A2A6A2A4		HIGH-LOW BAND FILTER ASSEMBLY, 100 KC, MFR 06845, PN: 2058991-0501	5-75
A2A6A2A4C3		CAPACITOR, FIXED, MICA, 0.46 × 0.37 × 0.18 IN., 99 UUF ±1%, 500 VDCW, MFR 72136, PN: DM15F990G500V	5-75
A2A6A2A4C4		CAPACITOR, FIXED, MICA, 0.45 × 0.36 × 0.17 IN., 59 UUF ±1%, 500 VDCW, MFR 72136, PN: DM15F590G500V	5-75
A2A6A2A4C7		SAME AS A2A4C1	5-75
A2A6A2A4C9		CAPACITOR, FIXED, MICA, 0.45 × 0.36 × 0.17 IN., 63 UUF ±1%, 500 VDCW, MFR 72136, PN: DM15E63G500V	5-75
A2A6A2A4C10		CAPACITOR, FIXED, CERAMIC, 0.19 DIA × 0.24 IN., 2.4 UUF ±5%, 500 VDCW, MFR 06845, PN: 552169-031	5-75
A2A6A2A4C11		SAME AS A2A6A2A4C4	5-75
A2A6A2A4C12		SAME AS A2A4C1	5-75
A2A6A2A4C13		SAME AS A2A4C1	5-75
A2A6A2A4C14		SAME AS A2A4C1	5-75
A2A6A2A4C15		SAME AS A2A4C1	5-75
A2A6A2A4C16		CAPACITOR, FIXED, MICA, 0.45 × 0.36 × 0.17 IN., 64 UUF ±1%, 500 VDCW, MFR 72136, PN: DM15E640F500V	5-75
A2A6A2A4C17		SAME AS A2A6A2A4C10	5-75
A2A6A2A4C20		DELETED	
A2A6A2A4C23		CAPACITOR - MIL TYPE CM05ED390G03	5-75
A2A6A2A4C24		SAME AS A2A4C1	5-75
A2A6A2A4C25		CAPACITOR, FIXED, MICA, 0.45 × 0.36 × 0.17 IN., 25 UUF ±1%, 500 VDCW, MFR 72136, PN: DM15C250G500V	5-75
A2A6A2A4C28		SAME AS A2A4C1	5-75
A2A6A2A4C29		SAME AS A2A4C1	5-75
A2A6A2A4C30		SAME AS A2A4C1	5-75
A2A6A2A4C31		CAPACITOR, FIXED, MICA, 0.45 × 0.36 × 0.17 IN., 47 UUF ±1%, 500 VDCW, MFR 72136, PN: DM15E470F500V	5-75
A2A6A2A4C32		CAPACITOR, FIXED, CERAMIC, 0.19 DIA × 0.29 IN., 1.8 UUF ±5%, 500 VDCW, MFR 06845, PN: 552169-028	5-75
A2A6A2A4C33		CAPACITOR, FIXED, MICA, 0.45 × 0.36 × 0.17 IN., 43 UUF ±2%, 300 VDCW, MFR 72136, PN: DM15E430G300V	5-75
A2A6A2A4C34		SAME AS A2A4C1	5-75
A2A6A2A4C35		SAME AS A2A4C1	5-75
A2A6A2A4C36		SAME AS A2A4C1	5-75
A2A6A2A4C37		SAME AS A2A4C1	5-75
A2A6A2A4C38		SAME AS A2A6A2A4C10	5-75

TABLE 6-1C. SUPPLEMENTARY PARTS LIST (Continued)

RADIO RECEIVER R-1051B/URR

REF DESIG	NOTES	NAME AND DESCRIPTION	FIG. NO.
A2A6A2A4C39		SAME AS A2A6A2A4C32	5-75
A2A6A2A4C40		SAME AS A2A6A2A4C10	5-75
A2A6A2A4C41		SAME AS A2A6A2A4C1	5-75
A2A6A2A4FL1		SHIELDING BEAD, FERRITE, 0.13 OD × 0.04 ID × 0.12 IN., MFR 78488, PN: 57-0180	5-75
A2A6A2A4IC1		INTEGRATED CIRCUIT, MFR 16170, PN: 911CE	5-75
A2A6A2A4IC2		SAME AS A2A6A2A4IC1	5-75
A2A6A2A4L1 THRU A2A6A2A4L6		DELETED	
A2A6A2A4Q1		SAME AS A2A6A1A3Q4	5-75
A2A6A2A4Q2		SAME AS A2A6A1A3Q4	5-75
A2A6A2A4Q3		DELETED	
A2A6A2A4Q4		DELETED	
A2A6A2A4R1		RESISTOR - MIL TYPE RC07GF201J	5-75
A2A6A2A4R2		RESISTOR - MIL TYPE RC07GF103J	5-75
A2A6A2A4R3		RESISTOR - MIL TYPE RC07GF510J	5-75
A2A6A2A4R4		SAME AS A2A6A2A4R2	5-75
A2A6A2A4R5		RESISTOR - MIL TYPE RC07GF510J	5-75
A2A6A2A4R6		SAME AS A2A6A2A4R1	5-75
A2A6A2A4R7		RESISTOR - MIL TYPE RC07GF820J	5-75
A2A6A2A4R8		SAME AS A2A6A2A4R1	5-75
A2A6A2A4R9		RESISTOR - MIL TYPE RC07GF392J	5-75
A2A6A2A4R10		RESISTOR - MIL TYPE RC07GF152J	5-75
A2A6A2A4R11		RESISTOR - MIL TYPE RC07GF221J	5-75
A2A6A2A4R12		SAME AS A2A6A2A4R2	5-75
A2A6A2A4R13		RESISTOR - MIL TYPE RC07GF271J	5-75
A2A6A2A4R14		SAME AS A2A6A2A4R5	5-75
A2A6A2A4R15		SAME AS A2A6A2A4R1	5-75
A2A6A2A4R16		SAME AS A2A6A2A4R2	5-75
A2A6A2A4R17		SAME AS A2A6A2A4R3	5-75
A2A6A2A4R18		SAME AS A2A6A2A4R2	5-75
A2A6A2A4R19		SAME AS A2A6A2A4R5	5-75
A2A6A2A4R20		SAME AS A2A6A2A4R1	5-75
A2A6A2A4R21		SAME AS A2A6A2A4R7	5-75
A2A6A2A4R22		SAME AS A2A6A2A4R2	5-75
A2A6A2A4R23		SAME AS A2A6A2A4R9	5-75
A2A6A2A4R24		SAME AS A2A6A2A4R10	5-75
A2A6A2A4R25		SAME AS A2A6A2A4R11	5-75
A2A6A2A4R26		RESISTOR - MIL TYPE RC07GF682J	5-75

TABLE 6-1C. SUPPLEMENTARY PARTS LIST (Continued)

RADIO RECEIVER R-1051B/URR

REF DESIG	NOTES	NAME AND DESCRIPTION	FIG. NO.
A2A6A2A4R27		SAME AS A2A6A2A4R13	5-75
A2A6A2A4R28		SAME AS A2A6A2A4R5	5-75
A2A6A2A4TP3 THRU A2A6A2A4TP6		DELETED	
A2A6A2A4T1		TRANSFORMER, RF, 50.6 PF, 25 MC, 200 OHMS, MFR 06845, PN: 2056932-0506	5-75
A2A6A2A4T2		SAME AS A2A6A2A4T1	5-75
A2A6A2A4T3		TRANSFORMER, RF, 0.78 UH, 25 MC, 100 OHMS, MFR 06845, PN: 2056932-0502	5-75
A2A6A2A4T4		TRANSFORMER, RF, 64.2 PF, 22 MC, 750 OHMS, MFR 06845, PN: 2058934-0521	5-75
A2A6A2A4T5		TRANSFORMER, RF, 0.78 UH, 25 MC, 1800 OHMS, MFR 06845, PN: 2058927-0504	5-75
A2A6A2A4T6		SAME AS A2A6A2A4T3	5-75
A2A6A2A4T7		SAME AS A2A6A2A4T1	5-75
A2A6A2A4T8		SAME AS A2A6A2A4T1	5-75
A2A6A2A4T9		TRANSFORMER, RF, 0.49 UH, 25 MC, 100 OHMS, MFR 06845, PN: 2058932-0501	5-75
A2A6A2A4T10		TRANSFORMER, RF, 50.4 UH, 29 MC, 750 OHMS, MFR 06845, PN: 2058934-0528	5-75
A2A6A2A4T11		TRANSFORMER, RF, 52.6 UH, 28 MC, 750 OHMS, MFR 06845, PN: 2058934-0527	5-75
A2A6A2A4T12		SAME AS A2A6A2A4T9	5-75
A2A6A2A5		AGC BOARD ASSEMBLY, MFR 06845, PN: 666230-879	5-79
A2A6A2A5CR1		DIODE - MIL TYPE 1N3064	5-79
A2A6A2A5C11		CAPACITOR - MIL TYPE CS13BF476K	5-79
A2A6A2A5L1		COIL, RF - MIL TYPE MS90537-30	5-79
A2A6A2A5L2		COIL, RF - MIL TYPE MS90537-19	5-79
A2A6A2A5L3		SAME AS A2A6A2A5L1	5-79
A2A6A2A5Q1		SAME AS A1A6A1A3Q4	5-79
A2A6A2A5R1		RESISTOR - MIL TYPE RC07GF682J	5-79
A2A6A2A5R4		RESISTOR - MIL TYPE RL07S133J	5-79
A2A6A2A5R5		RESISTOR - MIL TYPE RL07S912J	5-79
A2A6A2A5R6		RESISTOR - MIL TYPE RC07GF681J	5-79
A2A6A2A5R7		RESISTOR - MIL TYPE RL07S241J	5-79
A2A6A2A5R9		SAME AS A2A6A2A5R4	5-79
A2A6A2A5R12		RESISTOR - MIL TYPE RC07GF391J	5-79
A2A6A2A5R13		RESISTOR, VARIABLE, 0.39 × 0.40 × 0.18 IN., 200 OHMS ±5%, 500 VDCW, MFR 80294, PN: 3290W-1-201	5-79
A2A6A2A5R14		RESISTOR - MIL TYPE RL07S162J	5-79
A2A6A3J4		CONNECTOR, JACK, ELECTRICAL, 0.14 DIA × 0.95 IN., MFR 22238, PN: P5003C-196	5-80

TABLE 6-1C. SUPPLEMENTARY PARTS LIST (Continued)

RADIO RECEIVER R-1051B/URR

REF DESIG	NOTES	NAME AND DESCRIPTION	FIG. NO.
A2A6A3J5		SAME AS A2A6A3J4	5-80
A2A6A3J6		SAME AS A2A6A3J4	5-80
A2A6A3P1		CONNECTOR, PLUG, ELECTRICAL, GREEN, 0.14 DIA × 0.34 IN., MFR 98291, PN: SK-14	5-80
A2A6A3P2		CONNECTOR, PLUG, ELECTRICAL, GREEN, 0.15 DIA × 0.34 IN., MFR 98291, PN: SKT-14	5-80
A2A6A3A1CR1		SAME AS A2A6A2A5CR1	5-80
A2A6A3A1CR2		SAME AS A2A6A2A5CR1	5-80
A2A6A3A1C5		CAPACITOR - MIL TYPE CK06W103M	5-80
A2A6A3A1C6		SAME AS A2A6A3A1C5	5-80
A2A6A3A1C7		SAME AS A2A6A3A1C5	5-80
A2A6A3A1C8		SAME AS A2A6A3A1C5	5-80
A2A6A3A1C9		SAME AS A2A6A3A1C5	5-80
A2A6A3A1C10		CAPACITOR, FIXED, MICA, 0.46 × 0.38 × 0.19 IN., 200 UUF ±2%, 300V, MFR 72136, PN: DM15E200G300V	5-80
A2A6A3A1Q1		TRANSISTOR - MIL TYPE 2N2501	5-80
A2A6A3A1R1		RESISTOR - MIL TYPE RL07S203J	5-80
A2A6A3A1R4		RESISTOR - MIL TYPE RL07S132J	5-80
A2A6A3A1R7		RESISTOR - MIL TYPE RC07GF644J	5-80
A2A6A3A1R11		SAME AS A2A6A2A5R4	5-80
A2A6A3A1R13		SAME AS A2A6A3A1R11	5-80
A2A6A3A1R15		RESISTOR - MIL TYPE RC07GF821J	5-80
A2A6A3A1T1		TRANSFORMER, RF, 4.5 UH, 7.9 MC, MFR 06845, PN: 2058848-0505	5-80
A2A6A3A2		OSCILLATOR ASSEMBLY, 1.850 - 1.859 MC, MFR 06845, PN: 666230-889	5-82
A2A6A3A2CR1		SAME AS A2A6A2A5CR1	5-82
A2A6A3A2CR2		SAME AS A2A6A2A5CR1	5-82
A2A6A3A2C5		SAME AS A2A6A3A1C5	5-82
A2A6A3A2C6		SAME AS A2A2C26	5-82
A2A6A3A2C7		SAME AS A2A2C26	5-82
A2A6A3A2C8		SAME AS A2A6A3A1C5	5-82
A2A6A3A2C9		SAME AS A2A2C26	5-82
A2A6A3A2C21		DELETED	
A2A6A3A2Q1		SAME AS A2A6A3A1Q1	5-82
A2A6A3A2R11		SAME AS A2A6A2A5R4	5-82
A2A6A3A2R12		SAME AS A2A2A1R24	5-82
A2A6A3A2R13		SAME AS A2A6A2A5R4	5-82
A2A6A3A2T1		TRANSFORMER, RF, 10.75 UH, 7.9 MC, MFR 06845, PN: 2058848-0508	5-82
A2A6A3A3		OUTPUT AND BLANKER SUBASSEMBLY, 1 AND 10 KC, MFR 06845, PN: 666163-669	5-85

TABLE 6-1C. SUPPLEMENTARY PARTS LIST (Continued)

RADIO RECEIVER R-1051B/URR

REF DESIG	NOTES	NAME AND DESCRIPTION	FIG. NO.
A2A6A3A3C46		SAME AS A2A2C26	5-85
A2A6A3A3C47		SAME AS A2A2C26	5-85
A2A6A3A3C52		SAME AS A2A6A3A3C50	5-85
A2A6A3A3C55		SAME AS A2A2C26	5-85
A2A6A3A3J10		DELETED	5-85
A2A6A3A3R52	*	RESISTOR - MIL TYPE RC07GF120J	5-85
A2A6A3A3R52	*	RESISTOR - MIL TYPE RC07GF120J	5-85
A2A6A3A3R52	*	RESISTOR - MIL TYPE RC07GF180J	5-85
A2A6A3A3R52	*	RESISTOR - MIL TYPE RC07GF200J	5-85
A2A6A3A3R52	*	RESISTOR - MIL TYPE RC07GF220J	5-85
A2A6A3A3R52	*	RESISTOR - MIL TYPE RC07GF240J	5-85
A2A6A3A3R52	*	RESISTOR - MIL TYPE RC07GF270J	5-85
A2A6A3A3R52	*	RESISTOR - MIL TYPE RC07GF300J	5-85
A2A6A3A3R52	*	RESISTOR - MIL TYPE RC07GF330J	5-85
A2A6A3A3R52	*	RESISTOR - MIL TYPE RC07GF360J	5-85
A2A6A3A3R52	*	RESISTOR - MIL TYPE RC07GF390J	5-85
		NOTE: ITEMS MARKED (*) ARE SELECTED TO MEET UNIT SPECIFICATIONS.	
A2A6A3A4		ERROR MIXER ASSEMBLY, 1 AND 10 KC, MFR 06845, PN: 666230-899	5-83
A2A6A3A4C10		CAPACITOR, FIXED, MICA, 0.46 × 0.38 × 0.19 IN., 200 UUF ±2%, MFR 72136, PN: DM15E200G300V	5-83
A2A6A3A4C11		SAME AS A2A2C26	5-83
A2A6A3A4C12		SAME AS A2A2C26	5-83
A2A6A3A4C13		SAME AS A2A2C26	5-83
A2A6A3A4Q8		SAME AS A2A6A1A3Q4	5-83
A2A6A3A4Q9		SAME AS A2A6A1A3Q4	5-83
A2A6A4		SYNTHESIZER ASSEMBLY, 100 CPS, MFR 06845, PN: 2058937-0501	5-88
A2A6A4A1		PRESET COUNTER ASSEMBLY, 100 CPS SYNTHESIZER, MFR 06845, PN: 2073426-0501	5-89
A2A6A4A1CR1		SAME AS A2A1A1CR1	5-89
A2A6A4A1CR2		SAME AS A2A1A1CR1	5-89
A2A6A4A1CR3		SAME AS A2A1A1CR1	5-89
A2A6A4A1CR4		SAME AS A2A1A1CR1	5-89
A2A6A4A1CR5		SAME AS A2A1A1CR1	5-89
A2A6A4A1CR6		SAME AS A2A1A1CR1	5-89
A2A6A4A1CR7		SAME AS A2A1A1CR1	5-89
A2A6A4A1CR8		SAME AS A2A1A1CR1	5-89
A2A6A4A1CR9		SAME AS A2A1A1CR1	
A2A6A4A1CR10		SAME AS A2A1CR1	

TABLE 6-1C. SUPPLEMENTARY PARTS LIST (Continued)

RADIO RECEIVER R-1051B/URR

REF DESIG	NOTES	NAME AND DESCRIPTION	FIG. NO.
A2A6A4A1CR11		SAME AS A2A1CR1	5-89
A2A6A4A1CR12		SAME AS A2A1CR1	5-89
A2A6A4A1CR13		SAME AS A2A1CR1	5-89
A2A6A4A1CR14		SAME AS A2A1CR1	5-89
A2A6A4A1C1		SAME AS A2A1A1C2	5-89
A2A6A4A1C2		SAME AS A2A6A4A1C1	5-89
A2A6A4A1C3		CAPACITOR, FIXED, CERAMIC, 0.10 DIA × 0.26 IN., 32 PF ±10%, 100 VDCW, MFR 96095, PN: MC-70A330AK	5-89
A2A6A4A1C4		CAPACITOR - MIL TYPE CK06BX183K	5-89
A2A6A4A1C5		SAME AS A2A6A4A1C3	5-89
A2A6A4A1C6		SAME AS A2A4C1	5-89
A2A6A4A1C7		SAME AS A2A4C1	5-89
A2A6A4A1C8		SAME AS A2A4C1	5-89
A2A6A4A1C9		SAME AS A2A4C1	5-89
A2A6A4A1C10		SAME AS A2A4C1	5-89
A2A6A4A1C11		SAME AS A2A6A4A1C1	5-89
A2A6A4A1C12		SAME AS A2A6A4A1C3	5-89
A2A6A4A1C13		CAPACITOR - MIL TYPE CK05CW271K	5-89
A2A6A4A1C14		CAPACITOR, FIXED, MICA, 0.76 × 0.52 × 0.28 IN., 4300 UUF ±2%, 100 VDCW, MFR 72136, PN: DM20E4300G100V	5-89
A2A6A4A1C15		SAME AS A2A1A1C2	5-89
A2A6A4A1C16		SAME AS A2A1A1C2	5-89
A2A6A4A1C17		CAPACITOR - MIL TYPE CS13BF225M	5-89
A2A6A4A1C18 THRU A2A6A4A1C20		DELETED	
A2A6A4A1IC1		DECADE COUNTER, INTEGRATED CIRCUIT, MFR 07263, PN: SL6907	5-89
A2A6A4A1IC2		SAME AS A2A6A4A1IC1	5-89
A2A6A4A1IC3		SAME AS A2A6A4A1IC1	5-89
A2A6A4A1IC4		JK FLIP-FLOP, INTEGRATED CIRCUIT, MFR 07263, PN: SL3143	5-89
A2A6A4A1Q1		SAME AS A2A6A1A3Q1	5-89
A2A6A4A1Q2		TRANSISTOR - MIL TYPE 2N706	5-89
A2A6A4A1Q3		SAME AS A2A6A4A1Q2	5-89
A2A6A4A1Q4		SAME AS A2A6A4A1Q2	5-89
A2A6A4A1Q5		SAME AS A2A6A4A1Q2	5-89
A2A6A4A1Q6		SAME AS A2A6A4A1Q1	5-89
A2A6A4A1Q7		TRANSISTOR - MIL TYPE 2N1225	5-89
A2A6A4A1Q8		SAME AS A2A6A4A1Q2	5-89
A2A6A4A1Q9		SAME AS A2A6A4A1Q2	5-89
A2A6A4A1R1		RESISTOR - MIL TYPE RC07GF182J	5-89

TABLE 6-1C. SUPPLEMENTARY PARTS LIST (Continued)

RADIO RECEIVER R-1051B/URR

REF DESIG	NOTES	NAME AND DESCRIPTION	FIG. NO.
A2A6A4A1R2		RESISTOR - MIL TYPE RC07GF751J	5-89
A2A6A4A1R3		RESISTOR - MIL TYPE RC07GF123J	5-89
A2A6A4A1R4		RESISTOR - MIL TYPE RC07GF102J	5-89
A2A6A4A1R5		RESISTOR - MIL TYPE RC07GF100J	5-89
A2A6A4A1R6		RESISTOR - MIL TYPE RC07GF331J	5-89
A2A6A4A1R7		RESISTOR - MIL TYPE RC07GF161J	5-89
A2A6A4A1R8		RESISTOR - MIL TYPE RC07GF910J	5-89
A2A6A4A1R9		RESISTOR - MIL TYPE RC07GF911J	5-89
A2A6A4A1R10		RESISTOR - MIL TYPE RC07GF133J	5-89
A2A6A4A1R11		RESISTOR - MIL TYPE RC08GF272J	5-89
A2A6A4A1R12		SAME AS A2A1A3R5	5-89
A2A6A4A1R13		RESISTOR - MIL TYPE RC07GF332J	5-89
A2A6A4A1R14		RESISTOR - MIL TYPE RC07GF104J	5-89
A2A6A4A1R15		SAME AS A2A6A4A1R13	5-89
A2A6A4A1R16		SAME AS A2A6A4A1R14	5-89
A2A6A4A1R17		SAME AS A2A6A4A1R13	5-89
A2A6A4A1R18		SAME AS A2A6A4A1R14	5-89
A2A6A4A1R19		SAME AS A2A6A4A1R13	5-89
A2A6A4A1R20		SAME AS A2A6A4A1R14	5-89
A2A6A4A1R21		SAME AS A2A6A4A1R13	5-89
A2A6A4A1R22		RESISTOR - MIL TYPE RC08GF560J	5-89
A2A6A4A1R23		RESISTOR - MIL TYPE RC07GF103J	5-89
A2A6A4A1R24		SAME AS A2A6A4A1R12	5-89
A2A6A4A1R25		RESISTOR - MIL TYPE RC08GF203J	5-89
A2A6A4A1R26		RESISTOR - MIL TYPE RC08GF561J	5-89
A2A6A4A1R27		SAME AS A2A6A4A1R26	5-89
A2A6A4A1R28		RESISTOR - MIL TYPE RC07GF823J	5-89
A2A6A4A1R29		SAME AS A2A6A4A1R12	5-89
A2A6A4A1R30		RESISTOR - MIL TYPE RC08GF273J	5-89
A2A6A4A1R31		SAME AS A2A1A2R6	5-89
A2A6A4A1R32		RESISTOR - MIL TYPE RC07GF392J	5-89
A2A6A4A1R33		RESISTOR - MIL TYPE RC07GF221J	5-89
A2A6A4A1R34		SAME AS A2A6A4A1R28	5-89
A2A6A4A1R35		SAME AS A2A6A4A1R4	5-89
A2A6A4A1R36		RESISTOR - MIL TYPE RC07GF681J	5-89
A2A6A4A1R37		SAME AS A2A6A4A1R13	5-89
A2A6A4A1R38		SAME AS A2A6A4A1R23	5-89
A2A6A4A1R39		SAME AS A2A6A4A1R23	5-89
A2A6A4A1T1		TRANSFORMER, RF, 0.63 DIA × 0.41 IN., 4300 PF ±2%, 11.5 KC, MFR 06845, PN: 666231-911	5-89

TABLE 6-1C. SUPPLEMENTARY PARTS LIST (Continued)

RADIO RECEIVER R-1051B/URR

REF DESIG	NOTES	NAME AND DESCRIPTION	FIG. NO.
A2A6A4A1T2		DELETED	
A2A6A4A2		OSCILLATOR ASSEMBLY, 100 CPS SYNTHESIZER, MFR 06845, PN: 666231-911	5-93
A2A6A4A1T2		DELETED	
A2A6A4A2		OSCILLATOR ASSEMBLY, 100 CPS SYNTHESIZER, MFR 06845, PN: 2073425-0501	5-93
A2A6A4A2CR1		SEMICONDUCTOR DEVICE, DIODE, 0.40 DIA × 0.30 IN., MFR 12954, PN: DT30319C	5-93
A2A6A4A2CR2		DELETED	
A2A6A4A2CR3		SAME AS A2A1A3CR2	5-93
A2A6A4A2CR4		DIODE - MIL TYPE 1N758A	5-93
A2A6A4A2CR5		SAME AS A2A6A4A2CR3	5-93
A2A6A4A2CR6		SAME AS A2A6A4A2CR3	5-93
A2A6A4A2CR7		SEMICONDUCTOR DEVICE, DIODE, 0.12 DIA × 0.30 IN., 100 PF, 20 VDC, MFR 73293, PN: HC-7164	5-93
A2A6A4A2CR8		SAME AS A2A6A4A2CR7	5-93
A2A6A4A2CR9		SAME AS A2A6A4A2CR7	5-93
A2A6A4A2CR10		DELETED	
A2A6A4A2CR11		DELETED	
A2A6A4A2CR12		DELETED	
A2A6A4A2C1		SAME AS A2A1A1C2	5-93
A2A6A4A2C2		SAME AS A2A4C1	5-93
A2A6A4A2C3		SAME AS A2A6A4A1C3	5-93
A2A6A4A2C4		CAPACITOR - MIL TYPE CS13BF474M	5-93
A2A6A4A2C5		CAPACITOR, FIXED, METALLIZED PAPER OR MYLAR, 0.17 × 0.24 × 0.62 IN., 0.1 UF ±20%, 200 VDCW, MFR 58189, PN: 666164-914	5-93
A2A6A4A2C6		CAPACITOR - MIL TYPE CK12AX101K	5-93
A2A6A4A2C8		SAME AS A2A6A4A2C1	5-93
A2A6A4A2C9		SAME AS A2A4C1	5-93
A2A6A4A2C10		SAME AS A2A2A1C4	5-93
A2A6A4A2C12		SAME AS A2A4C1	5-93
A2A6A4A2C13		CAPACITOR, FIXED, MICA, 0.46 × 0.37 × 0.19 IN., 150 UUF ±2%, 300 VDCW, MFR 72136, PN: DM15E1500G300V	5-93
A2A6A4A2C14	*	CAPACITOR - MIL TYPE CM05ED510G03	5-93
A2A6A4A2C14	*	CAPACITOR - MIL TYPE CM05ED560G03	5-93
A2A6A4A2C14	*	CAPACITOR - MIL TYPE CM05ED620G03	5-93
A2A6A4A2C14	*	CAPACITOR - MIL TYPE CM05C080K03	5-93
A2A6A4A2C14	*	CAPACITOR - MIL TYPE CM05C100K03	5-93
A2A6A4A2C14	*	CAPACITOR - MIL TYPE CM05C120K03	5-93
A2A6A4A2C14	*	CAPACITOR - MIL TYPE CM05C120K03	

NOTE: ITEMS MARKED (*) ARE SELECTED TO MEET UNIT SPECIFICATIONS.

TABLE 6-1C. SUPPLEMENTARY PARTS LIST (Continued)

RADIO RECEIVER R-1051B/URR

REF DESIG	NOTES	NAME AND DESCRIPTION	FIG. NO.
A2A6A4A2C14	*	CAPACITOR - MIL TYPE CM05C120K03	5-93
A2A6A4A2C14	*	CAPACITOR - MIL TYPE CM05C180K03	5-93
A2A6A4A2C14	*	CAPACITOR - MIL TYPE CM05E200J03	5-93
A2A6A4A2C14	*	CAPACITOR - MIL TYPE CM05E220J03	5-93
A2A6A4A2C14	*	CAPACITOR - MIL TYPE CM05E240J03	5-93
A2A6A4A2C14	*	CAPACITOR - MIL TYPE CM05E270G03	5-93
A2A6A4A2C14	*	CAPACITOR - MIL TYPE CM05E300G03	5-93
A2A6A4A2C14	*	CAPACITOR - MIL TYPE CM05E330G03	5-93
A2A6A4A2C14	*	CAPACITOR - MIL TYPE CM05E360G03	5-93
A2A6A4A2C14	*	CAPACITOR - MIL TYPE CM05E390G03	5-93
A2A6A4A2C14	*	CAPACITOR - MIL TYPE CM05E430G03	5-93
A2A6A4A2C14	*	CAPACITOR - MIL TYPE CM05E470G03	5-93
A2A6A4A2C14	*	CAPACITOR - MIL TYPE CM05ED680G03	5-93
		NOTE: ITEMS MARKED (*) ARE SELECTED TO MEET UNIT SPECIFICATIONS.	
A2A6A4A2C15		CAPACITOR, FIXED, CERAMIC 0.20 DIA × 0.40 IN., 47 PF ±20%, 500 VDCW, MFR 72982, PN: 301-S3B-470M	5-93
A2A6A4A2FL1		FILTER ASSEMBLY, LOW PASS, 2.22 × 0.78 × 0.60 IN., MFR 06845, PN: 4013370-0001	5-93
A2A6A4A2IC1		SAME AS A2A6A4A1IC1	5-93
A2A6A4A2L2		COIL, RF - MIL TYPE MS90537-73	5-93
A2A6A4A2Q1		SAME AS A2A6A4A1Q2	5-93
A2A6A4A2Q2		SAME AS A2A6A4A1Q2	5-93
A2A6A4A2Q3		SAME AS A2A6A4A1Q2	5-93
A2A6A4A2Q4		DELETED	
A2A6A4A2Q5		DELETED	
A2A6A4A2Q6		DELETED	
A2A6A4A2Q7		DELETED	
A2A6A4A2Q8		DELETED	
A2A6A4A2Q9		DELETED	
A2A6A4A2R1		RESISTOR - MIL TYPE RC07GF271J	5-93
A2A6A4A2R2		DELETED	
A2A6A4A2R3		RESISTOR - MIL TYPE RC07GF562J	5-93
A2A6A4A2R4		SAME AS A2A5A4A1R12	5-93
A2A6A4A2R5		RESISTOR - MIL TYPE RC07GF152J	5-93
A2A6A4A2R6		SAME AS A2A6A4A1R13	5-93
A2A6A4A2R7		RESISTOR - MIL TYPE RC07GF682J	5-93
A2A6A4A2R8		RESISTOR - MIL TYPE RC08GF151J	5-93
A2A6A4A2R9		SAME AS A2A1A2R6	5-93

TABLE 6-1C. SUPPLEMENTARY PARTS LIST (Continued)

RADIO RECEIVER R-1051B/URR

REF DESIG	NOTES	NAME AND DESCRIPTION	FIG. NO.
A2A6A4A2R10		SAME AS A2A1A2R6	5-93
A2A6A4A2R11		SAME AS A2A1A2R6	5-93
A2A6A4A2R18 THRU A2A6A4A2R41		DELETED	
A2A6A4A2TP1		TERMINAL, FEEDTHRU, RED, 0.53 DIA × 0.55 IN., 5.5 AMPS, MFR 98291, PN: FT-MM-16L2	5-93
A2A6A4A2TP2		SAME AS A2A6A4A2RP1	5-93
A2A6A4A2T1		TRANSFORMER, RF, 0.63 DIA × 0.315 IN., 23 PF, 100 VDCW, MFR 58159, PN: A00095	5-93
A2A6A4A3		MIXER ASSEMBLY, 7.1 MC, 100 CPS, SYNTHESIZER, MFR 06845, PN: 2073424-0501	5-91
A2A6A4A3CR1 THRU A2A6A4A3CR9		DELETED	
A2A6A4A3C1		SAME AS A2A1A1C2	5-91
A2A6A4A3C2		CAPACITOR - MIL TYPE CS13BF225M	5-91
A2A6A4A3C4		SAME AS A2A4C1	5-91
A2A6A4A3C5		SAME AS A2A4C1	5-91
A2A6A4A3C6		SAME AS A2A2A1C1	5-91
A2A6A4A3C7		CAPACITOR, FIXED, MICA, 0.45 × 0.36 × 0.17 IN., 10 UUF ±1%, 500 VDCW, MFR 72136, PN: DM15C10G500	5-91
A2A6A4A3C8		SAME AS A2A6A4A3C7	5-91
A2A6A4A3C9		SAME AS A2A4C1	5-91
A2A6A4A3C10		SAME AS A2A4C1	5-91
A2A6A4A3C11		SAME AS A2A4C1	5-91
A2A6A4A3C12		SAME AS A2A4C1	5-91
A2A6A4A3C13		CAPACITOR, FIXED, MICA, 0.47 × 0.40 × 0.27 IN., 430 UUF ±1%, 300 VDCW, MFR 72136, PN: DM15E430G300V	5-91
A2A6A4A3C14		SAME AS A2A1A1C2	5-91
A2A6A4A3C15		SAME AS A2A6A4A3C2	5-91
A2A6A4A3C16		SAME AS A2A1A1C2	5-91
A2A6A4A3C17 THRU A2A6A4A3C25		DELETED	
A2A6A4A3FL1		FILTER ASSEMBLY, 1.50 × 0.75 × 0.87 IN., 2,200 CPF, 7.1 MC, MFR 19057, PN: 767701 MOD.	5-91
A2A6A4A3L1		COIL, RF - MIL TYPE MS90537-49	5-91
A2A6A4A3L2 THRU A2A6A4A3L7		DELETED	
A2A6A4A3P1		DELETED	
A2A6A4A3Q1		SAME AS A2A6A4A1Q2	5-91
A2A6A4A3Q2		SAME AS A2A6A1A3Q4	5-91

TABLE 6-1C. SUPPLEMENTARY PARTS LIST (Continued)

RADIO RECEIVER R-1051B/URR

REF DESIG	NOTES	NAME AND DESCRIPTION	FIG. NO.
A2A6A4A3Q3		TRANSISTOR - MIL TYPE 2N1142	5-91
A2A6A4A3Q4		SAME AS A2A6A4A3Q3	5-91
A2A6A4A3Q5 THRU A2A6A4A3Q7		DELETED	
A2A6A4A3RT1		DELETED	
A2A6A4A3R1		SAME AS A2A1A2R6	5-91
A2A6A4A3R2		SAME AS A2A6A4A1R23	5-91
A2A6A4A3R3		RESISTOR - MIL TYPE RC08GF153J	5-91
A2A6A4A3R4		SAME AS A2A6A4A1R12	5-91
A2A6A4A3R5		RESISTOR - MIL TYPE RC07GF472J	5-91
A2A6A4A3R6		RESISTOR - MIL TYPE RC07GF270J	5-91
A2A6A4A3R7		SAME AS A2A6A4A3R3	5-91
A2A6A4A3R8		SAME AS A2A6A4A1R23	5-91
A2A6A4A3R9		SAME AS A2A6A4A1R36	5-91
A2A6A4A3R10		SAME AS A2A6A4A1R36	5-91
A2A6A4A3R11		SAME AS A2A6A4A1R23	5-91
A2A6A4A3R12		SAME AS A2A6A4A3R3	5-91
A2A6A4A3R13		SAME AS A2A1A2R6	5-91
A2A6A4A3R14		RESISTOR - MIL TYPE RC07GF470J	5-91
A2A6A4A3R15		SAME AS A2A6A4A1R13	5-91
A2A6A4A3R16		SAME AS A2A6A4A1R23	5-91
A2A6A4A3R17		DELETED	
A2A6A4A3R18		SAME AS A2A6A4A3R3	5-91
A2A6A4A3R19		RESISTOR - MIL TYPE RC07GF122J	5-91
A2A6A4A3R20		RESISTOR, VARIABLE, 0.37 × 0.37 × 0.21 IN., 1000 MEGOHMS ±5%, 500 VDCW, MFR 80294, PN: 3290 W-1-201	5-91
A2A6A4A3R21		SAME AS A2A6A4A3R14	5-91
A2A6A4A3R22 THRU A2A6A4A3R31		DELETED	
A2A6A4A3TP1		SAME AS A2A6A4A2TP1	5-91
A2A6A4A3TP2		SAME AS A2A6A4A2TP1	5-91
A2A6A4A3TP3		CONNECTOR, RECEPTACLE, ELECTRICAL, WHITE, 0.37 DIA × 0.31 IN., 1500 VDCW, 5 AMPS, MFR 74970, PN: 105-851	5-91
A2A6A4A3TP4		SAME AS A2A6A4A2TP1	5-91
A2A6A4A3TP5		SAME AS A2A6A4A3TP3	5-91
A2A6A4A3T1		TRANSFORMER, RF, 1.18 UH, 7.9 MC, MFR 06845, PN: 2058848-0509	5-91
A2A6A5		SPECTRUM GENERATOR ASSEMBLY, MFR 06845, PN: 666230-652	5-94
A2A6A5A1		SPECTRUM ASSEMBLY, 100 KC, MFR 06845, PN: 666230-924	5-95
A2A6A5A1CR4		SAME AS A2A1A3CR2	5-95

TABLE 6-1C. SUPPLEMENTARY PARTS LIST (Continued)

RADIO RECEIVER R-1051B/URR

REF DESIG	NOTES	NAME AND DESCRIPTION	FIG. NO.
A2A6A5A1C2		CAPACITOR - MIL TYPE CS13BE156K	5-95
A2A6A5A1C9		SAME AS A2A6A1C25	5-95
A2A6A5A1C10		CAPACITOR, FIXED, CERAMIC, 0.30 × 0.30 × 0.10 IN., MFR 58189, PN: 698822-121	5-95
A2A6A5A1C11		SAME AS A2A2C26	5-95
A2A6A5A1L1		COIL, RF - MIL TYPE MS80537-49	5-95
A2A6A5A1L5		COIL, RF, 2.5 UH, 7.9 MC, MFR 06845, PN: 2058848-0502	5-95
A2A6A5A1Q1		TRANSISTOR, MFR 80131, PN: 2N1301	5-95
A2A6A5A1Q2		SAME AS A2A6A4A1Q2	5-95
A2A6A5A1Q3		SAME AS A2A6A5A1Q1	5-95
A2A6A5A1Q4		TRANSISTOR - MIL TYPE 2N705	5-95
A2A6A5A1Q5		SAME AS A2A6A1A3Q4	5-95
A2A6A5A1Q6		SAME AS A2A6A1A3Q4	5-95
A2A6A5A1R9		RESISTOR - MIL TYPE RL07S361J	5-95
A2A6A5A1R24	*	RESISTOR - MIL TYPE RC07GF102J	5-95
A2A6A5A1R24	*	RESISTOR - MIL TYPE RC07GF122J	5-95
A2A6A5A1R24	*	RESISTOR - MIL TYPE RC07GF152J	5-95
A2A6A5A1R24	*	RESISTOR - MIL TYPE RC07GF182J	5-95
A2A6A5A1R24	*	RESISTOR - MIL TYPE RC07GF222J	5-95
A2A6A5A1R24	*	RESISTOR - MIL TYPE RC07GF272J	5-95
A2A6A5A1R24	*	RESISTOR - MIL TYPE RC07GF332J	5-95
A2A6A5A1R24	*	RESISTOR - MIL TYPE RC07GF392J	5-95
A2A6A5A1R24	*	RESISTOR - MIL TYPE RC07GF472J	5-95
A2A6A5A1R24	*	RESISTOR - MIL TYPE RL07S432J	5-95
A2A6A5A1R24	*	RESISTOR - MIL TYPE RL07S512J	5-95
		NOTE: ITEMS MARKED (*) ARE SELECTED TO MEET UNIT SPECIFICATIONS.	
A2A6A5A1TP1		SAME AS A2A6A4A2TP1	5-95
A2A6A5A1TP2		SAME AS A2A6A4A2TP1	5-95
A2A6A5A1TP3		SAME AS A2A6A4A2TP1	5-95
A2A6A5A1TP4		SAME AS A2A6A4A2TP1	5-95
A2A6A5A1TP5		SAME AS A2A6A4A2TP1	5-95
A2A6A5A1TP6		SAME AS A2A6A4A2TP1	5-95
A2A6A5A1T2		TRANSFORMER, RF, 2.5 UH, 7.9 MC, MFR 06845, PN: 2058848-0501	5-95
A2A6A5A2		SPECTRUM ASSEMBLY, 10 KC, MFR 06845, PN: 666230-929	5-96
A2A6A5A2CR4		DIODE - MIL TYPE 1N318	5-96
A2A6A5A2C2		SAME AS A2A6A5A1C2	5-96
A2A6A5A2C12		CAPACITOR - MIL TYPE CS13BF335K	5-96
A2A6A5A2Q6		SAME AS A2A6A1A3Q4	5-96

TABLE 6-1C. SUPPLEMENTARY PARTS LIST (Continued)

RADIO RECEIVER R-1051B/URR

REF DESIG	NOTES	NAME AND DESCRIPTION	FIG. NO.
A2A6A5A2R2		RESISTOR - MIL TYPE RC07GF391J	5-96
A2A6A5A2R3		RESISTOR - MIL TYPE RL07S302J	5-96
A2A6A5A2R7		SAME AS A2A6A5A2R3	5-96
A2A6A5A2R24		DELETED	
A2A6A5A2TP1		SAME AS A2A6A4A2TP1	5-96
A2A6A5A2TP2		SAME AS A2A6A4A2TP1	5-96
A2A6A5A2TP3		SAME AS A2A6A4A2TP1	5-96
A2A6A5A2TP4		SAME AS A2A6A4A2TP1	5-96
A2A6A5A2TP5		SAME AS A2A6A4A2TP1	5-96
A2A6A5A2TP6		SAME AS A2A6A4A2TP1	5-96
A2A6A5A3		SPECTRUM ASSEMBLY, 1 KC, MFR 06845, PN: 666230-934	5-97
A2A6A5A3CR4		SAME AS A2A1A3CR2	5-97
A2A6A5A3C1		CAPACITOR - MIL TYPE CS13BF685K	5-97
A2A6A5A3C2		SAME AS A2A6A5A1C2	5-97
A2A6A5A3C9		CAPACITOR, FIXED, POLYSTYRENE, 0.59 × 1.43 × 0.75 IN., 0.33 UF ±10%, 100 VDCW, MFR 58189, PN: 666164-923	5-97
A2A6A5A3C13		SAME AS A2A2C26	5-96
A2A6A5A3C16		SAME AS A2A2C26	5-96
A2A6A5A3C17		CAPACITOR - MIL TYPE CK06BX562K	5-97
A2A6A5A3J1		DELETED	
A2A6A5A3J2		TERMINAL, FEEDTHRU, RED, 0.218 DIA × 1.94 IN, MFR 05009, PN: RFT-M-14	5-97
A2A6A5A3Q1		SAME AS A2A6A5A1Q1	5-97
A2A6A5A3Q2		SAME AS A2A6A5A1Q1	5-97
A2A6A5A3Q4		SAME AS A2A6A5A1Q1	5-97
A2A6A5A3Q5		SAME AS A2A6A5A1Q1	5-97
A2A6A5A3Q6		SMAE AS A2A6A1A3Q4	5-97
A2A6A5A3R1		SAME AS A2A2A1R5	5-97
A2A6A5A3R2		RESISTOR - MIL TYPE RC07GF391J	5-97
A2A6A5A3R3		RESISTOR - MIL TYPE RL07S302J	5-97
A2A6A5A3R7		SAME AS A2A6A5A3R3	5-97
A2A6A5A3R11		RESISTOR - MIL TYPE RT22C2L502	5-97
A2A6A5A3R12		RESISTOR - MIL TYPE RC07GF332J	5-97
A2A6A5A3R13		SAME AS A2A6A4A1R33	5-97
A2A6A5A3R17		SAME AS A2A6A4A1R33	5-97
A2A6A5A3R20		RESISTOR - MIL TYPE RC07GF333J	5-97
A2A6A5A3R23		RESISTOR - MIL TYPE RC07GF152J	5-97
A2A6A5A3R24	*	RESISTOR - MIL TYPE RC07GF102J	5-97
A2A6A5A3R24	*	RESISTOR - MIL TYPE RC07GF122J	5-97
		NOTE: ITEMS MARKED (*) ARE SELECTED TO MEET UNIT SPECIFICATIONS.	

TABLE 6-1C. SUPPLEMENTARY PARTS LIST (Continued)

RADIO RECEIVER R-1051B/URR

REF DESIG	NOTES	NAME AND DESCRIPTION	FIG. NO.
A2A6A5A3R24	*	RESISTOR - MIL TYPE RC07GF152J	5-97
A2A6A5A3R24	*	RESISTOR - MIL TYPE RC07GF182J	5-97
A2A6A5A3R24	*	RESISTOR - MIL TYPE RC07GF222J	5-97
A2A6A5A3R24	*	RESISTOR - MIL TYPE RC07GF272J	5-97
A2A6A5A3R24	*	RESISTOR - MIL TYPE RC07GF332J	5-97
A2A6A5A3R24	*	RESISTOR - MIL TYPE RC07GF392J	5-97
A2A6A5A3R24	*	RESISTOR - MIL TYPE RC07GF472J	5-97
A2A6A5A3R24	*	RESISTOR - MIL TYPE RC07GF562J	5-97
A2A6A5A3R24	*	RESISTOR - MIL TYPE RC07GF682J	5-97
A2A6A5A3R24	*	RESISTOR - MIL TYPE RC07GF822J	5-97
A2A6A5A3R24	*	RESISTOR - MIL TYPE RC07S432J	5-97
A2A6A5A3R24	*	RESISTOR - MIL TYPE RC07S512J	5-97
A2A6A5A3R24	*	RESISTOR - MIL TYPE RC07S622J	5-97
A2A6A5A3R24	*	RESISTOR - MIL TYPE RL07S752J	5-97
		NOTE: ITEMS MARKED (*) ARE SELECTED TO MEET UNIT SPECIFICATIONS.	
A2A6A5A3TP1		SAME AS A2A6A4A2TP1	5-97
A2A6A5A3TP2		SAME AS A2A6A4A2TP1	5-97
A2A6A5A3TP3		SAME AS A2A6A4A2TP1	5-97
A2A6A5A3TP4		SAME AS A2A6A4A2TP1	5-97
A2A6A5A3TP5		SAME AS A2A6A4A2TP1	5-97
A2A6A5A3TP6		SAME AS A2A6A4A2TP1	5-97
A2A6A5A4		SPECTRUM ASSEMBLY, 5 KC, MFR 06845, PN: 666230-939	5-98
A2A6A5A4C7		CAPACITOR - MIL TYPE CM06F222G03	5-98
A2A6A5A4L1		COIL, RF, 0.18 DIA × 0.41 IN., 1000 UH ±10%, 7.9 MC, MFR 03550, PN: 7849	5-98
A2A6A5A4Q1		SAME AS A2A6A1A3Q4	5-98
A2A6A5A4Q2		SAME AS A2A6A5A1Q1	5-98
A2A6A5A4Q3		SAME AS A2A6A1A3Q4	5-98
A2A6A5A4R11	*	RESISTOR - MIL TYPE RC07GF102J	5-98
A2A6A5A4R11	*	RESISTOR - MIL TYPE RC07GF122J	5-98
A2A6A5A4R11	*	RESISTOR - MIL TYPE RC07GF152J	5-98
A2A6A5A4R11	*	RESISTOR - MIL TYPE RC07GF182J	5-98
A2A6A5A4R11	*	RESISTOR - MIL TYPE RC07GF222J	5-98
A2A6A5A4R11	*	RESISTOR - MIL TYPE RC07GF272J	5-98
A2A6A5A4R11	*	RESISTOR - MIL TYPE RC07GF332J	5-98
A2A6A5A4R11	*	RESISTOR - MIL TYPE RC07GF392J	5-98
A2A6A5A4R11	*	RESISTOR - MIL TYPE RC07GF432J	5-98
		NOTE: ITEMS MARKED (*) ARE TO BE SELECTED TO MEET UNIT SPECIFICATIONS.	

TABLE 6-1C. SUPPLEMENTARY PARTS LIST (Continued)

RADIO RECEIVER R-1051B/URR

REF DESIG	NOTES	NAME AND DESCRIPTION	FIG. NO.
A2A6A5A4R11	*	RESISTOR - MIL TYPE RC07GF472J	5-98
A2A6A5A4R11	*	RESISTOR - MIL TYPE RC07GF512J	5-98
A2A6A5A4R11	*	RESISTOR - MIL TYPE RC07GF562J	5-98
A2A6A5A4R11	*	RESISTOR - MIL TYPE RC07GF662J	5-98
A2A6A5A4R11	*	RESISTOR - MIL TYPE RC07GF682J	5-98
A2A6A5A4R11	*	RESISTOR - MIL TYPE RC07GF752J	5-98
A2A6A5A4R11	*	RESISTOR - MIL TYPE RC07GF822J	5-98
		NOTE: ITEMS MARKED (*) ARE TO BE SELECTED TO MEET UNIT SPECIFICATIONS.	
A2A6A5A4TP1		SAME AS A2A6A4A2TP1	5-98
A2A6A5A4TP2		SAME AS A2A6A4A2TP1	5-98
A2A6A5A4TP3		SAME AS A2A6A4A2TP1	5-98
A2A6A5A4TP4		SAME AS A2A6A4A2TP1	5-98
A2A6A5A4TP5		SAME AS A2A6A4A2TP1	5-98
A2A6A5A4T1		TRANSFORMER, RF, 1000 UH, 0.25 MC, MFR 06845, PN: 2058929-0501	5-98
A2A6A6A1J4		CONNECTOR, PLUG, ELECTRICAL, GRAY, 0.21 DIA × 1.94 IN., 750 VDCW, MFR 05009, PN: RFT-M-14	5-100
A2A6A6A1J5		CONNECTOR, PLUG, ELECTRICAL, GRAY, 0.21 DIA × 1.94 IN., MFR 05009, PN: FT-M-19	5-100
A2A6A6A1J6		SAME AS A2A6A6A1J4	5-100
A2A6A6A1J7		SAME AS A2A6A6A1J5	5-100
A2A6A6A1L1		COIL, RF - MIL TYPE MS90537-49	5-100
A2A6A6A1L2		COIL, RF - MIL TYPE MS75008-44	5-100
A2A6A6A1L3		SAME AS A2A6A6A1L2	5-100
A2A6A6A1L4		SAME AS A2A6A6A1L1	5-100
A2A6A6A1L5		SAME AS A2A6A6A1L1	5-100
A2A6A6A1L6		SAME AS A2A6A6A1L1	5-100
A2A6A6A1L7		SAME AS A2A6A6A1L1	5-100
A2A6A6A1L8		SAME AS A2A6A6A1L1	5-100
A2A6A6A1L9		COIL, RF - MIL TYPE MS90537-15	5-100
A2A6A6A1Q1		TRANSISTOR - MIL TYPE 2N1142	5-100
A2A6A6A1Q2		SAME AS A2A6A1A3Q4	5-100
A2A6A6A1Q3		SAME AS A2A6A1A3Q4	5-100
A2A6A6A1Q4		SAME AS A2A6A1A3Q4	5-100
A2A6A6A1Q5		SAME AS A2A6A1A3Q4	5-100
A2A6A6A1Q6		SAME AS A2A6A1A3Q4	5-100
A2A6A6A1Q7		SAME AS A2A6A6A1Q1	5-100
A2A6A6A1Q8		SAME AS A2A6A6A1Q1	5-100
A2A6A6A1Q9		SAME AS A2A6A6A1Q1	5-100

TABLE 6-1C. SUPPLEMENTARY PARTS LIST (Continued)

RADIO RECEIVER R-1051B/URR

REF DESIG	NOTES	NAME AND DESCRIPTION	FIG. NO.
A2A6A6A1R1		SAME AS A2A5A1R7	5-100
A2A6A6A1R3		RESISTOR - MIL TYPE RL07S301J	5-100
A2A6A6A1R8	*	RESISTOR - MIL TYPE RC07GF150J	5-100
A2A6A6A1R8	*	RESISTOR - MIL TYPE RC07GF100J	5-100
A2A6A6A1R8	*	RESISTOR - MIL TYPE RC07GF220J	5-100
A2A6A6A1R12		SAME AS A2A5A1R7	5-100
A2A6A6A1R16		SAME AS A2A5A1R7	5-100
A2A6A6A1R26		SAME AS A2A5A1R7	5-100
A2A6A6A1R27		RESISTOR - MIL TYPE RL20S751J	5-100
A2A6A6A1R38	*	RESISTOR - MIL TYPE RC07GF100J	5-100
A2A6A6A1R38	*	RESISTOR - MIL TYPE RC07GF150J	5-100
A2A6A6A1R38	*	RESISTOR - MIL TYPE RC07GF180J	5-100
A2A6A6A1R38	*	RESISTOR - MIL TYPE RC07GF300J	5-100
A2A6A6A1R38	*	RESISTOR - MIL TYPE RC07GF470J	5-100
A2A6A6A1R38	*	RESISTOR - MIL TYPE RC07GF644J	5-100
A2A6A6A1R38	*	RESISTOR - MIL TYPE RC07GF390J	5-100
A2A6A6A1R38	*	RESISTOR - MIL TYPE RC07GF270J	5-100
		NOTE: ITEMS MARKED (*) ARE SELECTED TO MEET UNIT SPECIFICATIONS.	
A2A8		POWER SUPPLY ASSEMBLY, MFR 06845, PN: 666230-755	5-18
A2A8CR5		DIODE - MIL TYPE 1N4246	5-18
A2A8CR13		DIODE - MIL TYPE 1N3024B	5-18
A2A8CR16		DIODE - MIL TYPE 1N963B	5-18
A2A8CR17		DIODE - MIL TYPE 1N750A	5-18
A2A8C3		CAPACITOR - MIL TYPE CL64CK390MP3	5-18
A2A8R6		RESISTOR - MIL TYPE RL07S302J	5-18
A2A9		ANTENNA CUTOUT ASSEMBLY, MFR 06845, PN: 666231-698	5-20
A2A9C2		CAPACITOR - MIL TYPE CC20CK050C	5-20
A2A9C3		SAME AS A2A4C1	5-20
A2A9C4		CAPACITOR, FIXED, TANTALEX, 0.18 DIA × 0.51 IN., 22 UUF ±10%, 10 VDCW, MFR 06845, PN: 696121-226	5-20
A2A9C5		CAPACITOR, FIXED, CERAMIC, 0.52 × 0.53 × 0.125 IN., 0.1 UF +10% -20%, 75 VDCW, MFR 86335, PN: K6000-0-1-M	5-20
A2A9Q1		TRANSISTOR - MIL TYPE 2N2905A	5-20
A2A9R1		RESISTOR - MIL TYPE RC20GF680J	5-20
A2A9R2		RESISTOR - MIL TYPE RC20GF820J	5-20
A2A9R3		RESISTOR - MIL TYPE RC07GF392J	5-20
A2A9R4		RESISTOR - MIL TYPE RC32GF182J	5-20
A2A9R5		SAME AS A2A6A4A1R5	5-20

TABLE 6-1C. SUPPLEMENTARY PARTS LIST (Continued)

RADIO RECEIVER R-1051B/URR

REF DESIG	NOTES	NAME AND DESCRIPTION	FIG. NO.
A2A10		LAME ASSEMBLY, MFR 06845, PN: 666230-235	5-20
A2A10DS3		LAMP, 0.34 CP, 0.4 AMPS, 28 VDCW, MFR 72914, PN: A9906-1	5-20
A2A10DS4		SAME AS A2A10DS3	5-20
A2A11		VERNIER AND 4 VDC SUPPLY ASSEMBLY, MFR 06845, PN: 2058942-0501	5-19
A2A11CR1		DIODE - MIL TYPE 1N748A	5-19
A2A11CR2		DIODE - MIL TYPE 1N746A	5-19
A2A11C1		SAME AS A2A1A1C2	5-19
A2A11C2		SAME AS A2A4C1	5-19
A2A11C3		SAME AS A2A1A1C2	5-19
A2A11C4		CAPACITOR, FIXED, METALLIZED PAPER OR MYLER, 0.62 × 0.27 × 0.21 IN., MFR 06845, PN: 666164-914	5-19
A2A11R1		RESISTOR - MIL TYPE RC07GF303J	5-19
A2A11R2		RESISTOR - MIL TYPE RT22C2P02	5-19
A2A11R3		RESISTOR - MIL TYPE RL07S512J	5-19
A2A11R5		SAME AS A2A6A4A1R4	5-19
A2A11R6		RESISTOR - MIL TYPE RL20S203J	5-19
A2A11R7		RESISTOR - MIL TYPE RC20GF475J	5-19

TABLE 6-2. MAINTENANCE PARTS LIST

RADIO RECEIVER R-1051/URR

REF DESIG	NOTES	NAME AND DESCRIPTION	FIG. NO.
	A,B	RECEIVER, R-1051/URR, MFR 58189, P/N 666230-C03	
	C	RECEIVER, R-1051/URR, MFR 58189, P/N AC9499-C01	
A1		CASE SUBASSEMBLY, RECEIVER, MFR 58189, P/N 666230-C06	
A1E1-E3		CONNECTOR, RECEPTACLE, ELECTRICAL, MFR 91146, P/N DM53743-5014	5- 18
A1E4		GROUND STRAP, MFR 58189, P/N 666231-893	5- 17
A1J1-J22		NOT USED	
A1J23		CONNECTOR, RECEPTACLE, ELECTRICAL, MFR 91146, P/N NJBF0	5- 17
A1J24		CONNECTOR, RECEPTACLE, ELECTRICAL, MFR 91146, P/N BNCJB7F0	5- 17
A1J25		SAME AS A1J23	5- 17
A1MP1		COVER, MIL TYPE MX913U	5- 17
A1MP2		COVER, MIL TYPE MS35186-123A	5- 17
A1P1-P20		NOT USED	-
A1P21		CONNECTOR, RECEPTACLE, ELECTRICAL, 2.635 IN. LG X 0.605 IN. W X 0.563 IN. H, MFR 71468, P/N DDSMF50S	5- 18
A1P22		CONNECTOR, RECEPTACLE, ELECTRICAL, 1.541 IN. LG X 0.494 IN. W X 0.664 IN. H, MFR 91146, P/N DAMF3W3SC31	5- 18
A1A1		FILTER BOX SUBASSEMBLY, MFR 58189, P/N 666230-706	5- 18
A1A1C1-C26		CAPACITOR, MIL TYPE CK70AW102M	5- 18
A1A1J1-J2		NOT USED	
A1A1J3		CONNECTOR, RECEPTACLE, ELECTRICAL, 1.375 IN. LG X 1.375 IN. W X 1.093 IN. H, MFR 77820, P/N 71-74116-5P	5- 17
A1A1J4		CONNECTOR, RECEPTACLE, ELECTRICAL, 1.812 IN. LG X 1.812 IN. W X 1.105 IN. H, MFR 77820, P/N PT07A20-39P	5- 17
A1A1J5-J6		CONNECTOR, RECEPTACLE, ELECTRICAL, 1.000 IN. LG X 1.000 IN. W X 1.093 IN. H, MFR 77820, P/N 71-74111-4P	5- 17
A2	A,B	CHASSIS, RECEIVER, MFR 58189, P/N 666230-007	
A2	C	CHASSIS, RECEIVER, MFR 58189, P/N AC9497-001	
A2		FRONT PANEL SUBASSEMBLY, MFR 58189, P/N 666230-526	
A2C1		CAPACITOR, MIL TYPE CE51C121J	5- 15
A2C2		CAPACITOR, MIL TYPE CE51C301G	5- 15
A2C3		CAPACITOR, FIXED, METALIZED PAPER DIELECTRIC, 0.1 UF PORM 20 PCT, 200 WVDC, MFR 02777, P/N T2900-4	5- 16
A2CR1-CR4		SEMICONDUCTOR DEVICE, DIODE, MFR 80131, P/N 1N649	5- 16
A2DS1-DS4		NOT USED	
A2DS5		LAMP, INCANDESCENT, MFR 24455, P/N NE2J	5-16A
A2F1-F2		FUSE, MIL TYPE FO2R250V3-4AS	5-16A

TABLE 6-2. MAINTENANCE PARTS LIST (Continued)

RADIO RECEIVER R-1051/URR

REF DESIG	NOTES	NAME AND DESCRIPTION	FIG. NO.
A2MP51-MP52		SPRING, DETENT, SUBASSEMBLY, MFR 58189, P/N 666230-191	5-16A
A2MP53-MP54		BEARING, ROLLER, NEEDLE, MFR 60380, P/N B2 1-2 4	5-16A
A2MP55-MP57		SHAFT, STRAIGHT, 0.312 IN. DIA X 2.122 IN. LG, MFR 58189, P/N 666162-100	5-16A
A2MP58-MP60		GEAR SET, BEVEL, MATCHED, MFR 58189, P/N 666162-110	5-16A
A2MP61-MP63		DIAL AND COLLAR ASSEMBLY, MFR 58189, P/N 666162-227	5-16A
A2MP64-MP65		SHAFT, FEED THRU, MFR 58189, P/N 666163-194	5-16A
A2MP66		DETENT, SHAFT, MFR 58189, P/N 666231-003	5-16A
A2MP67-MP68		SPROCKET, DRIVE, 36 TEETH, MFR 58189, P/N 666273-098	5-16A
A2MP69		SPROCKET, DRIVE, 30 TEETH, MFR 58189, P/N 666162-067	5-16A
A2MP70		SCREW, CAPTIVE, MFR 58189, P/N 666231-671	5-16A
A2MP71-MP75		SCREW, CAPTIVE, MFR 58189, P/N 666164-260	5-16A
A2MP76		CHAIN, MFR 58189, P/N 666273-066	5- 16
A2MP77		CHAIN, MFR 58189, P/N 666162-201	5- 16
A2MP78		CHAIN, MFR 58189, P/N 666162-202	5- 16
A2MP78A-78C		MASTER LINK, CHAIN, MFR 58189, P/N 666162-228	5- 16
A2MP79-MP80		BLOCK, ADJUSTABLE IDLER ASSEMBLY, MFR 58189, P/N 666162-094	5- 16
A2MP81		BLOCK, ADJUSTABLE IDLER ASSEMBLY, MFR 58189, P/N 666162-095	5- 16
A2MP82		SPROCKET ASSEMBLY, MFR 58189, P/N 666162-221	5- 16
A2MP82A-MP82F		BEARING, BALL, ANNULAR, 0.422 IN. DIA. X 0.141 IN. THK, MFR 40920, P/N S6632FCEB972	5- 16
A2MP82G		SPROCKET, DRIVE, 25 TEETH, MFR 58189, P/N 666162-065	5- 16
A2MP82H-MP82I		SPROCKET, DRIVE, 30 TEETH, MFR 58189, P/N 666273-099	5- 16
A2MP82J-MP82L		DISK, COUPLING, 0.875 IN. DIA X 0.390 IN. LG, MFR 58189, P/N 666231-631	5- 16
A2MP82M		SHAFT, STRAIGHT, 0.1874 IN. DIA X 1.328 IN. LG, MFR 58189, P/N 666231-617	5- 16
A2MP82N-MP82O		SHAFT, STRAIGHT, 0.1874 IN. DIA X 1.062 IN. LG, MFR 58189, P/N 666231-619	5- 16
A2MP83		SPROCKET ASSEMBLY, MFR 58189, P/N 666162-222	5- 16
A2MP83A-MP83B		SAME AS A2MP82M	5- 16
A2MP83C-MP83D		SPROCKET, DRIVE, 30 TEETH, MFR 58189, P/N 666162-066	5- 16
A2MP83E-MP83H		SAME AS A2MP82A-MP82F	5- 16
A2MP83I-MP83J		SAME AS A2MP82J-MP82L	5- 16
A2MP83K-MP83L		WHEEL, INDEX, 1.500 IN. DIA X 0.062 IN. THK, MFR 58189, P/N 666163-115	5- 16
A2MP83M-MP83N		BEARING, ROLLER, NEEDLE, MFR 60380, P/N B34	5- 16
A2MP83O-MP83P		PIN, ROLLER, 0.1875 IN. DIA X 0.4000 IN. LG, MFR 58189, P/N 666163-114	5- 16
A2MP83Q-MP83R		ARM, SPRING DETENT, MFR 58189, P/N 666163-199	5- 16
A2M1-M2		METER, AUDIO LEVEL, 1.251 IN. H X 1.250 IN. DIA, MFR 81030, P/N 3201-210	5-16A
A2Q1		TRANSISTOR, MFR 80131, P/N 2N1209	5- 16

TABLE 6-2. MAINTENANCE PARTS LIST (Continued)

RADIO RECEIVER R-1051/URR

REF DESIG	NOTES	NAME AND DESCRIPTION	FIG. NO.
A2FL1-FL2		FILTER, RADIO FREQUENCY, 0.3 AMPS, 2.7 OHMS, 300 VDC, MFR 56289, P/N 1JX97	5- 16
A2J1-J2		JACK, TELEPHONE, MIL-J-641, P/N JJ089	5-103
A2J3-J7		NOT USED	
A2J8		CONNECTOR, RECEPTACLE, ELECTRICAL, 2.088 IN. LG X 0.494 IN. W X 0.663 IN. H, MFR 91146, P/N DBSM25S	5- 16
A2J9		CONNECTOR, RECEPTACLE, ELECTRICAL, 2.729 IN. LG X 0.494 IN. W X 0.660 IN. H, MFR 91146, P/N DCMF13W6S1C31	5- 15
A2J10		CONNECTOR, RECEPTACLE, ELECTRICAL, 1.541 IN. LG X 0.494 IN. W X 0.663 IN. H, MFR 91146, P/N DASM15S2	5- 15
A2J11		CONNECTOR, RECEPTACLE, ELECTRICAL, 2.729 IN. LG X 0.494 IN. W X 0.660 IN. H, MFR 91146, P/N DCMF17W5S1C31	5- 15
A2J12		CONNECTOR, RECEPTACLE, ELECTRICAL, 2.729 IN. LG X 0.494 IN. W X 0.660 IN. H, MFR 91146, P/N DCMF25W3S1C31	5- 15
A2J13-J14		CONNECTOR, RECEPTACLE, ELECTRICAL, 1.541 IN. LG X 0.494 IN. W X 0.656 IN. H, MFR 91146, P/N DAMF3W3S2C31	5- 15
A2J15		NOT USED	
A2J16		CONNECTOR, RECEPTACLE, ELECTRICAL, 2.088 IN. LG X 0.494 IN. W X 0.663 IN. H, MFR 91146, P/N DBMF13W3S2C31	5- 15
A2J17		CONNECTOR, RECEPTACLE, ELECTRICAL, 2.088 IN. LG X 0.494 IN. W X 0.663 IN. H, MFR 91146, P/N DBMF9W4S2C31	5- 15
A2J18-J19		SAME AS A2J12	5- 15
A2J20		NOT USED	
A2J21		CONNECTOR, RECEPTACLE, ELECTRICAL, 2.635 IN. LG X 0.605 IN. W X 0.692 IN. H, MFR 91146, P/N DDSM50P	5- 16
A2J22		CONNECTOR, RECEPTACLE, ELECTRICAL, 1.541 IN. LG X 0.494 IN. W X 0.656 IN. H, MFR 91146, P/N DAM3W3PC31	5- 16
A2K1-K3		RELAY, ARMATURE, 3 AMPS AT 28VDC, 1.330 IN. LG X 0.427 IN. W X 1.085 IN. H, MFR 02289, P/N 2F2427	5- 16
A2L1		REACTOR, 2.625 IN. LG X 1.688 IN. W X 4.875 IN. H, MFR 70674, P/N A14514	5- 15
A2L2		REACTOR, 4.125 IN. LG X 2.500 IN. W X 4.750 IN. H, MFR 17637, P/N TB1022	5- 15
A2MP1-MP3		CONNECTOR, PLUG, ELECTRICAL, MFR 91146, P/N DM53741-5012	5- 16
A2MP4-MP30		CONNECTOR, RECEPTACLE, ELECTRICAL, MFR 91146, P/N DM53743-5014	5- 16
A2MP31-MP32		KNOB, MFR 49956, P/N 70-1-2G	5-16A
A2MP33-MP36		KNOB, MFR 49956, P/N 70-2-2G	5-16A
A2MP37		KNOB, MFR 49956, P/N 70-8WL2G	5-16A
A2MP38		KNOB, MFR 58189, P/N 666231-005	5-16A
A2MP39		KNOB, CONTROL, MFR 58189, P/N 666230-706	5-16A
A2MP40-MP44		KNOB, MFR 58189, P/N 666162-078	5-16A
A2MP45-MP46		SHAFT, CONTROL KNOB, MFR 58189, P/N 666230-171	5-16A
A2MP47-MP48		DIAL, MC, MFR 58189, P/N 666230-177	5-16A
A2MP49-MP50		PIN, BEARING, 0.1562 IN. DIA X 0.4000 IN. LG, MFR 58189, P/N 666230-187	5-16A

TABLE 6-2. MAINTENANCE PARTS LIST (Continued)

RADIO RECEIVER R-1051/URR

REF DESIG	NOTES	NAME AND DESCRIPTION	FIG. NO.
A2R1-R2		RESISTOR, VARIABLE, 1K OHMS PORM 10 PCT, MFR 01121, P/N JD3E056S102UA	5-16A
A2R3		RESISTOR, MIL TYPE RV4SAYSD102A	5-16A
A2R4-R5		RESISTOR, MIL TYPE RV4SAYSD252C	5-16A
A2R6		RESISTOR, MIL TYPE RV4SAYSD253C	5-16A
A2R7		RESISTOR, VARIABLE, LINEAR PRECISION, 30K OHMS PORM 5 PCT, 2W, MFR 80744, P/N SG1231	5-16A
A2R8		RESISTOR, FIXED, WIREWOUND, 332 OHMS PORM 3 PCT, 5W, MFR 91637, P/N RH5-3320H	5- 16
A2R9-R10		RESISTOR, MIL TYPE RC07GF122J	5- 14
A2R11-R12		SAME AS A2R1-R2	5-16A
A2R13-R14		RESISTOR, MIL TYPE RC07GF433J	5- 14
A2R15-R16		RESISTOR, MIL TYPE RC07GF112J	5- 14
A2R17-R18		RESISTOR, MIL TYPE RC07GF102J	5- 14
A2R19		RESISTOR, MIL TYPE RC07GF331J	5- 14
A2R20		RESISTOR, MIL TYPE RC42GF133J	5- 16
A2S1		SWITCH, TOGGLE, DPDT, MFR 81640, P/N TW2150	5-16A
A2S2		SWITCH, ROTARY, 1.5 IN. DIA X 1.975 IN. LG, 4 SECTION 18 POLES 8 POSITIONS, MFR 76854, P/N SR/02/N3081MP	5-16A
A2S3-S4		CODE GENERATOR, MFR 58189, P/N 666230-794	5- 16
A2S5		SAME AS A2S1	5-16A
A2S6		SWITCH, ROTARY, 1 SECTION, 6 POLES, 3 POSITIONS, NON-SHORTING CONTRACTS MFR 58189, P/N 810000-424	5-16A
A2S7		SWITCH, MIL TYPE MS35059-23	5- 14
A2S8-1,S8-2		INTERLOCK SWITCH SUBASSEMBLY, MFR 58189, P/N 666231-001	5- 14
A2S9		SWITCH, MIL TYPE MS24656-23	5- 14
A2T1		TRANSFORMER, POWER, STEP-DOWN, 2.625 IN. LG X 2.250 IN. W X 4.875 IN. H, MFR 91574, P/N W5444	5- 15
A2XC1-XC2		SOCKET, ELECTRON TUBE, MFR 72825, P/N 9729-38	5- 16
A2XDS1-XDS4		NOT USED	
A2XDS5		LIGHT, INDICATOR, MFR 72619, P/N 137-8864-09-522	5-16A
A2XF1-XF2		FUSEHOLDER, MIL TYPE FHL17G	5-16A
A2A1		MODE SELECTOR, RECEIVER, MFR 58189, P/N 666230-015	
A2A1C1		CAPACITOR, FIXED, MICA DIELECTRIC, 300 UUF PORM 2 PCT, 300 WVDC, MFR 72136, P/N DM15E301G300V	5- 22
A2A1C2 SELECTED		CAPACITOR, FIXED, MICA DIELECTRIC, 130 UUF PORM 2 PCT, 300 WVDC, MFR 72136, P/N DM15E131G300V	5- 22
A2A1C2 SELECTED		CAPACITOR, FIXED, MICA DIELECTRIC, 142 UUF PORM 2 PCT, 300 WVDC, MFR 72136, P/N DM15F1420G300V	5- 22
A2A1C2 SELECTED		CAPACITOR, FIXED, MICA DIELECTRIC, 150 UUF PORM 2 PCT, 300 WVDC, MFR 72136, P/N DM15E151G300V	5- 22

TABLE 6-2. MAINTENANCE PARTS LIST (Continued)

RADIO RECEIVER R-1051/URR

REF DESIG	NOTES	NAME AND DESCRIPTION	FIG. NO.
A2A1C3-C4		NOT USED	
A2A1C5-C7 SELECTED		SAME AS A2A1C2 SELECTED	5- 22
A2A1C5-C7 SELECTED		SAME AS A2A1C2 SELECTED	5- 22
A2A1C5-C7 SELECTED		SAME AS A2A1C2 SELECTED	5- 22
A2A1E1-E3		CONNECTOR, PLUG, ELECTRICAL, MFR 91146, P/N DM53741-5000	5- 22
2A1E4-E7		SAME AS A2A1E1-E3	5- 24
A2A1FL1		FILTER, BAND PASS, 500KC, MFR 95105, P/N 526-9420-00	5- 22
A2A1FL2		FILTER, BAND PASS, 500KC, MFR 95105, P/N 526-9421-00	5- 22
A2A1FL3		FILTER, BAND PASS, 500KC, MFR 95105, P/N 526-9419-00	5- 22
A2A1MP1-MP2		SCREW, EXTERNALLY RELIEVED BODY, MFR 58189, P/N 666163-233	5- 22
A2A1P1		CONNECTOR, RECEPTACLE, ELECTRICAL, 2.088 IN. LG X 0.494 IN. W X 0.663 IN. H, MFR 91146, P/N DBM13W3PC31F115	5- 22
A2A1P2		CONNECTOR, PLUG, ELECTRICAL, 2.088 IN. LG X 0.494 IN. W X 0.661 IN. H, MFR 91146, P/N DBM9W4PC31F115	5- 24
A2A1R1-R2 SELECTED		RESISTOR, MIL TYPE RC07GF101J	5- 22
A2A1R1-R2 SELECTED		RESISTOR, MIL TYPE RC07GF151J	5- 22
A2A1R1-R2 SELECTED		RESISTOR, MIL TYPE RC07GF181J	5- 22
A2A1R1-R2 SELECTED		RESISTOR, MIL TYPE RC07GF221J	5- 22
A2A1R1-R2 SELECTED		RESISTOR, MIL TYPE RC07GF271J	5- 22
A2A1R1-R2 SELECTED		RESISTOR, MIL TYPE RC07GF331J	5- 22
A2A1R1-R2 SELECTED		RESISTOR, MIL TYPE RC07GF391J	5- 22
A2A1R1-R2 SELECTED		RESISTOR, MIL TYPE RC07GF431J	5- 22
A2A1R1-R2 SELECTED		RESISTOR, MIL TYPE RC07GF471J	5- 22
A2A1R1-R2 SELECTED		RESISTOR, MIL TYPE RC07GF511J	5- 23
A2A1A1		MODE GATE, PRINTED CIRCUIT BOARD, W/ALL COMPONENTS ASSEMBLED FOR OPERATION, MFR 58189, P/N 666231-740	5- 23
A2A1A1C1		CAPACITOR, FIXED, METALIZED PAPER DIELECTRIC, 0.1 UF PORM 20 PCT, 200 WVDC, MFR 02777, P/N T2900-4	5- 23
A2A1A1C2-C4		CAPACITOR, FIXED, ELECTROLYTIC, 1 UF PORM 20 PCT, 35 WVDC, MFR 56289, P/N 150D105X0035A2	5- 23
A2A1A1CR1-CR4		SEMICONDUCTOR DEVICE, DIODE, MIL TYPE 1N270	5- 23
A2A1A1R1		SAME AS A2A1R1-R2 SELECTED	5- 23
A2A1A1R2		SAME AS A2A1C3-C4	
A2A1A1R3		RESISTOR, MIL TYPE RC07GF102J	5- 23
A2A1A1R4		NOT USED	
A2A1A1R5-R7		RESISTOR, MIL TYPE RC07GF392J	5- 23
A2A1A1TP1		JACK, TIP, MFR 74970, P/N 105-751	5- 23
A2A1A2		OKC FILTER AND GATE, PRINTED CIRCUIT BOARD, W/ALL COMPONENTS ASSEMBLED FOR OPERATION, MFR 58189, P/N 666231-035	5- 25

TABLE 6-2. MAINTENANCE PARTS LIST (Continued)

RADIO RECEIVER R-1051/URR

REF DESIG	NOTES	NAME AND DESCRIPTION	FIG. NO.
A2A1A2C1-C4		CAPACITOR, FIXED, METALIZED PAPER DIELECTRIC, 0.2 UF PORM 20 PCT, 200 WVDC, MFR 02777, P/N T2900-S	5- 25
A2A1A2CR1		SAME AS A2A1A1CR1-CR4	5- 25
A2A1A2R1		RESISTOR, MIL TYPE RC20GF911J	5- 25
A2A1A2R2,R3		SAME AS A2A1R1-R2 SELECTED	5- 25
A2A1A2R4		RESISTOR, MIL TYPE RC07GF153J	5- 25
A2A1A2R5		RESISTOR, MIL TYPE RC20GF511J	5- 25
A2A1A2R6		SAME AS A2A1R1-R2 SELECTED	5- 25
A2A1A3		BFO, PRINTED CIRCUIT BOARD, W/ALL COMPONENTS ASSEMBLED FOR OPERATION, MFR 58189, P/N 666231-745	5- 26
A2A1A3C1		SAME AS A2A1A2C1-C4	5- 26
A2A1A3C2		CAPACITOR, MIL TYPE CM06F302G03	5- 26
A2A1A3C3		CAPACITOR, MIL TYPE CC52UJ111G	5- 26
A2A1A3C4		CAPACITOR, MIL TYPE CM05F201G03	5- 26
A2A1A3C5		CAPACITOR, MIL TYPE CM06F821G03	5- 26
A2A1A3C6		SAME AS A2A1A3C2	5- 26
A2A1A3C7-C8		SAME AS A2A1A2C1-C4	5- 26
A2A1A3C9		CAPACITOR, MIL TYPE CM06F751G03	5- 26
A2A1A3CR1		SEMICONDUCTOR DEVICE, DIODE, MFR 80131, P/N 1N954	5- 26
A2A1A3CR2,CR3		SEMICONDUCTOR DEVICE, DIODE, MFR 80131, P/N 1N3063	5- 26
A2A1A3L1		REACTOR, 470 UH, 500 VDC, 0.500 IN. H X 0.400 IN. DIA, MFR 72259, P/N J6508	5- 26
A2A1A3Q1,Q2		TRANSISTOR, MFR 80131, P/N 2N1225	5- 26
A2A1A3R1		RESISTOR, MIL TYPE RC07GF754J	5- 26
A2A1A3R2		RESISTOR, MIL TYPE RC07GF105J	5- 26
A2A1A3R3		RESISTOR, MIL TYPE RC07GF103J	5- 26
A2A1A3R4		RESISTOR, MIL TYPE RC07GF104J	5- 26
A2A1A3R5		RESISTOR, MIL TYPE RC07GF222J	5- 26
A2A1A3R6		SAME AS A2A1A1R3	5- 26
A2A1A3R7		RESISTOR, MIL TYPE RC07GF123J	5- 26
A2A1A3R8		RESISTOR, MIL TYPE RC07GF183J	5- 26
A2A1A3R9,R10		R9 → RESISTOR, MIL TYPE RC07GF562J 2.7kJ	5- 26
A2A1A3T1		R11 → RC07GF 101J TRANSFORMER, INTERMEDIATE FREQUENCY, MFR 58189, P/N 666162-422	5- 26
A2A1A3TP1		NOT USED	
A2A1A3TP2		SAME AS A2A1A1TP1	5- 26
A2A1A3XQ1-XQ2		MOUNTING PAD, TRANSISTOR, 0.344 IN. DIA X 0.075 IN. THK, MFR 07047, P/N 10027	5- 26
A2A2		RECEIVER ASSEMBLY, INTERMEDIATE FREQUENCY, MFR 58189, P/N 666230-011	5- 27

TABLE 6-2. MAINTENANCE PARTS LIST (Continued)

RADIO RECEIVER R-1051/URR

REF DESIG	NOTES	NAME AND DESCRIPTION	FIG. NO.
A2A2E1,E2		CONNECTOR, PLUG, ELECTRICAL, MFR 91146, P/N DM53741-5000	5- 30
A2A2E3		CONNECTOR, PLUG, ELECTRICAL, MFR 91146, P/N DM53741-5012	5- 30
A2A2MP1-MP2		SCREW, EXTERNALLY RELIEVED BODY, MFR 58189, P/N 666163-233	5- 30
A2A2P1		CONNECTOR, RECEPTACLE, ELECTRICAL, 2.729 IN. LG X 0.494 IN. W X 0.660 IN. H, MFR 91146, P/N DCM25W3PC31	5- 30
A2A2T1		TRANSFORMER, RADIO FREQUENCY, 1.187 IN. LG X 0.875 IN. W X 1.187 IN. H, MFR 16157, P/N J813	5- 27
A2A2A1		AGC AUDIO AMPLIFIER, PRINTED CIRCUIT BOARD, W/ALL COMPONENTS ASSEMBLED FOR OPERATION, MFR 58189, P/N 666230-959	5- 28
A2A2A1C1		CAPACITOR, FIXED, ELECTROLYTIC, 6.8 UF PORM 20 PCT, 35 WVDC, MFR 56289, P/N 150D685X0035B2	5- 28
A2A2A1C2		CAPACITOR, FIXED, ELECTROLYTIC, 15 UF PORM 20 PCT, 20 WVDC, MFR 56289, P/N 150D156X0020R2	5- 28
A2A2A1C3		CAPACITOR, FIXED, ELECTROLYTIC, 39 UF PORM 10 PCT, 10 WVDC, MFR 56289, P/N 150D396X9010B2	5- 28
A2A2A1C4		CAPACITOR, FIXED, METALIZED PAPER DIELECTRIC, 0.05 UF PORM 20 PCT, 200 WVDC, MFR 02777, P/N T2900-1	5- 28
A2A2A1C5		CAPACITOR, FIXED, ELECTROLYTIC, 22 UF PORM 20 PCT, 10 WVDC, MFR 56289, P/N 150D226X0010B2	5- 28
A2A2A1C6		CAPACITOR, FIXED, ELECTROLYTIC, 22 UF PORM 20 PCT, 35 WVDC, MFR 56289, P/N 150D226X0035R2	5- 28
A2A2A1C7		CAPACITOR, MIL TYPE CK15AX223M	5- 28
A2A2A1C8		CAPACITOR, MIL TYPE CM06F821G03	5- 28
A2A2A1C9		SAME AS A2A2A1C4	5- 28
A2A2A1C10		SAME AS A2A2A1C8	5- 28
A2A2A1C11		CAPACITOR, FIXED, METALIZED PAPER DIELECTRIC, 0.01 UF PORM 20 PCT, 200 WVDC, MFR 02777, P/N T2900-2 Bendix 203150-0702 MFR 00656 TYPE V146ZR	5- 28
A2A2A1C12-C13		SAME AS A2A2A1C2	5- 28
A2A2A1CR1,CR2		SEMICONDUCTOR DEVICE, DIODE, MIL TYPE 1N270	5- 28
A2A2A1CR3		SEMICONDUCTOR DEVICE, DIODE, MFR 80131, P/N 1N645	5- 28
A2A2A1CR4,CR5		SEMICONDUCTOR DEVICE, DIODE, MFR 80131, P/N 1N3064	5- 28
A2A2A1Q1-Q2		TRANSISTOR, MIL TYPE 2N1131	5- 28
A2A2A1Q3		TRANSISTOR, MFR 80131, P/N 2N706	5- 28
A2A2A1Q4		TRANSISTOR, MFR 04713, P/N 2N706/SM5584	5- 28
A2A2A1Q5		SAME AS A2A2A1Q3	5- 28
A2A2A1Q6		TRANSISTOR, MFR 80131, P/N 2N328A	5- 28
A2A2A1Q7-Q8		TRANSISTOR, MFR 80131, P/N 2N1225	5- 28
A2A2A1Q9		TRANSISTOR, MFR 80131, P/N 2N652	5- 28
A2A2A1R1		RESISTOR, MIL TYPE RC07GF622J	5- 28
A2A2A1R2		RESISTOR, MIL TYPE RC07GF102J	5- 28
A2A2A1R3		RESISTOR, MIL TYPE RC07GF272J	5- 28

TABLE 6-2. MAINTENANCE PARTS LIST (Continued)

RADIO RECEIVER R-1051/URR

REF DESIG	NOTES	NAME AND DESCRIPTION	FIG. NO.
A2A2A1R4		RESISTOR, MIL TYPE RC07GF182J	5- 28
A2A2A1R5		RESISTOR, MIL TYPE RC07GF511J	5- 28
A2A2A1R6		RESISTOR, VARIABLE, 1K OHMS PORM 5 PCT, 1W, MFR 80294, P/N 3250W66-102	5- 28
A2A2A1R7		RESISTOR, MIL TYPE RC07GF332J	5- 28
A2A2A1R8		RESISTOR, MIL TYPE RC07GF621J	5- 28
A2A2A1R9-R10		SAME AS A2A2A1R2	5- 28
A2A2A1R11		RESISTOR, MIL TYPE RC07GF752J	5- 28
A2A2A1R12		RESISTOR, MIL TYPE RC07GF103J	5- 28
A2A2A1R13		RESISTOR, MIL TYPE RC07GF682J	5- 28
A2A2A1R14		RESISTOR, MIL TYPE RC07GF331J	5- 28
A2A2A1R15		RESISTOR, MIL TYPE RC07GF362J	5- 28
A2A2A1R16		RESISTOR, MIL TYPE RC07GF512J	5- 28
A2A2A1R17		RESISTOR, MIL TYPE RC07GF683J	5- 28
A2A2A1R18		SAME AS A2A2A1R3	5- 28
A2A2A1R19		SAME AS A2A2A1R17	5- 28
A2A2A1R20		SAME AS A2A2A1R13	5- 28
A2A2A1R21		RESISTOR, MIL TYPE RC07GF392J	5- 28
A2A2A1R22		SAME AS A2A2A1R12	5- 28
A2A2A1R23		RESISTOR, MIL TYPE RC07GF153J	5- 28
A2A2A1R24		RESISTOR, MIL TYPE RC07GF201J	5- 28
A2A2A1R25		RESISTOR, VARIABLE, 5K OHMS PORM 5 PCT, 1W, MFR 80294, P/N 224P1-502	5- 28
A2A2A1R26-28		SAME AS A2A2A1R12	5- 28
A2A2A1R29		SAME AS A2A2A1R3	5- 28
A2A2A1R30		RESISTOR, MIL TYPE RC07GF181J	5- 28
A2A2A1R31		RESISTOR, MIL TYPE RC07GF472J	5- 28
A2A2A1RT1		RESISTOR, THERMAL, 5.29K OHMS PORM 5 PCT, MFR 75263, P/N RL2006-2930-120S4	5- 28
A2A2A1T1		TRANSFORMER, VARIABLE, RADIO FREQUENCY, 500 KC, 0.620 IN. LG X 0.422 IN. DIA, MFR 58189, P/N 809000-234	5- 28
A2A2A1T2		TRANSFORMER, VARIABLE, RADIO FREQUENCY, 500 KC, 0.620 IN. LG X 0.422 IN. DIA, MFR 58189, P/N 809000-235	5- 28
A2A2A1TP1,TP2		JACK, TIP, MFR 74970, P/N 105-751	5- 28
A2A2A1XQ1-XQ3		MOUNTING PAD, TRANSISTOR, 0.344 IN. DIA X 0.075 IN. THK, MFR 07047, P/N 10012	5- 28
A2A2A1XQ5		SAME AS A2A2A1XQ1-XQ3	5- 28
A2A2A1XQ7-XQ8		MOUNTING PAD, TRANSISTOR, 0.344 IN. DIA X 0.075 IN. THK, MFR 07047, P/N 10027	5- 28
A2A2A2		IF-AUDIO AMPLIFIER, PRINTED CIRCUIT BOARD, W/ALL COMPONENTS ASSEMBLED FOR OPERATION, MFR 58189, P/N 666230-949	5- 31

TABLE 6-2. MAINTENANCE PARTS LIST (Continued)

RADIO RECEIVER R-1051/URR

REF DESIG	NOTES	NAME AND DESCRIPTION	FIG. NO.
A2A2A2C1-C2		CAPACITOR, FIXED, METALIZED PAPER DIELECTRIC, 0.1 UF PORM 20 PCT, 200 WVDC, MFR 02777, P/N T2900-4	5- 31
A2A2A2C3		CAPACITOR, FIXED, MICA DIELECTRIC, 820 UUF PORM 2 PCT, 300 WVDC, MFR 72136, P/N DM15E821G300V	5- 31
A2A2A2C4-C5		SAME AS A2A2A1C4	5- 31
A2A2A2C6		SAME AS A2A2A2C1-C2	5- 31
A2A2A2C7		SAME AS A2A2A1C4	5- 31
A2A2A2C8		SAME AS A2A2A2C3	5- 31
A2A2A2C9		SAME AS A2A2A2C1-C2	5- 31
A2A2A2C10		SAME AS A2A2A1C4	5- 31
A2A2A2C11		SAME AS A2A2A2C3	5- 31
A2A2A2C12-C13		SAME AS A2A2A1C4	5- 31
A2A2A2C14		SAME AS A2A2A2C3	5- 31
A2A2A2C15		SAME AS A2A2A2C1-C2	5- 31
A2A2A2C16-C17		SAME AS A2A2A1C2	5- 31
A2A2A2C18		CAPACITOR, FIXED, ELECTROLYTIC, 47 UF PORM 20 PCT, 20 WVDC, MFR 56289, P/N 150D476X0020R2	5- 31
A2A2A2C19		SAME AS A2A2A1C1	5- 31
A2A2A2C20-22		SAME AS A2A2A1C2	5- 31
A2A2A2C23		CAPACITOR, FIXED, MICA DIELECTRIC, 1200 UUF PORM 5 PCT, 500 WVDC, MFR 72136, P/N DM20E122J500V	5- 31
A2A2A2C24		SAME AS A2A2A1C2	5- 31
A2A2A2C25		CAPACITOR, FIXED, ELECTROLYTIC, 47 UF PORM 20 PCT, 35 WVDC, MFR 56289 P/N 150D476X0035S2	5- 31
A2A2A2C26		CAPACITOR, FIXED, CERAMIC DIELECTRIC, 0.01 UF, PORM 20 PCT, 75 WVDC, MFR 86335, P/N SSM01-88	5- 31
A2A2A2CR1		SAME AS A2A2A1CR3	5- 31
A2A2A2L1		COIL, RADIO FREQUENCY, 10,000 UF, MFR 99800, P/N 1537-756	5- 31
A2A2A2Q1		SAME AS A2A2A1Q7-Q8	5- 31
A2A2A2Q2-Q3		SAME AS A2A2A1Q3	5- 31
A2A2A2Q4-Q6		SAME AS A2A2A1Q7-Q8	5- 31
A2A2A2Q7-Q8		SAME AS A2A2A1Q9	5- 31
A2A2A2Q9-Q10		TRANSISTOR, MFR 80131, P/N 2N1183A	5- 31
A2A2A2R1		SAME AS A2A2A1R23	5- 31
A2A2A2R2-R3		SAME AS A2A2A1R12	5- 31
A2A2A2R4		NOT USED	
A2A2A2R5		RESISTOR, MIL TYPE RC07GF151J	5- 31
A2A2A2R6		RESISTOR, MIL TYPE RC07GF471J	5- 31
A2A2A2R7		RESISTOR, MIL TYPE RC07GF561J	5- 31

TABLE 6-2. MAINTENANCE PARTS LIST (Continued)

RADIO RECEIVER R-1051/URR

REF DESIG	NOTES	NAME AND DESCRIPTION	FIG. NO.
A2A2A2R8		SAME AS A2A2A1R2	5- 31
A2A2A2R9		RESISTOR, MIL TYPE RC07GF470J	5- 31
A2A2A2R10		SAME AS A2A2A1R23	5- 31
A2A2A2R11-R12		SAME AS A2A2A1R12	5- 31
A2A2A2R13		RESISTOR, MIL TYPE RC07GF220J	5- 31
A2A2A2R14		SAME AS A2A2A1R23	5- 31
A2A2A2R15-R16		SAME AS A2A2A1R12	5- 31
A2A2A2R17		RESISTOR, MIL TYPE RC07GF101J	5- 31
A2A2A2R18		RESISTOR, MIL TYPE RC07GF620J	5- 31
A2A2A2R19		SAME AS A2A2A1R23	5- 31
A2A2A2R20-R21		SAME AS A2A2A1R12	5- 31
A2A2A2R22		RESISTOR, VARIABLE, 1K OHMS PORM 5 PCT, 1W, MFR 80294, P/N 3250W1-102	5- 31
A2A2A2R23		RESISTOR, MIL TYPE RC07GF510J	5- 31
A2A2A2R24		RESISTOR, MIL TYPE RC07GF122J	5- 31
A2A2A2R25		RESISTOR, MIL TYPE RC07GF113J	5- 31
A2A2A2R26		SAME AS A2A2A1R5	5- 31
A2A2A2R27		SAME AS A2A2A1R2	5- 31
A2A2A2R28		RESISTOR, MIL TYPE RC07GF163J	5- 31
A2A2A2R29		SAME AS A2A2A1R31	5- 31
A2A2A2R30		SAME AS A2A2A1R1	5- 31
A2A2A2R31		SAME AS A2A2A2R18	5- 31
A2A2A2R32		SAME AS A2A2A2R7	5- 31
A2A2A2R33		SAME AS A2A2A1R8	5- 31
A2A2A2R34		RESISTOR, MIL TYPE RC07GF821J	5- 31
A2A2A2R35		SAME AS A2A2A2R9	5- 31
A2A2A2R36		SAME AS A2A2A1R12	5- 31
A2A2A2R37		RESISTOR, MIL TYPE RC20GF101J	5- 31
A2A2A2R38		SAME AS A2A2A1R13	5- 31
A2A2A2R39		SAME AS A2A2A1R14	5- 31
A2A2A2T1		TRANSFORMER, VARIABLE, RADIO FREQUENCY, 500 KC, 0.620 IN. LG X 0.422 IN. DIA, MFR 58189, P/N 809000-230	5- 31
A2A2A2T2		TRANSFORMER, VARIABLE, RADIO FREQUENCY, 500 KC, 0.620 IN. LG X 0.422 IN. DIA, MFR 58189, P/N 809000-231	5- 31
A2A2A2T3		TRANSFORMER, VARIABLE, RADIO FREQUENCY, 500 KC, 0.620 IN. LG X 0.422 IN. DIA, MFR 58189, P/N 809000-232	5- 31
A2A2A2T4		TRANSFORMER, VARIABLE, RADIO FREQUENCY, 500 KC, 0.620 IN. LG X 0.422 IN. DIA, MFR 58189, P/N 809000-233	5- 31
A2A2A2T5		TRANSFORMER, AUDIO FREQUENCY, 0.875 IN. LG X 0.781 IN. WD X 0.531 IN. H, MFR 00348, P/N M5153	5- 31

TABLE 6-2. MAINTENANCE PARTS LIST (Continued)

RADIO RECEIVER R-1051/URR

REF DESIG	NOTES	NAME AND DESCRIPTION	FIG. NO.
A2A2A2XQ1-XQ4		SAME AS A2A2A1XQ1-XQ3	5- 31
A2A2A2XQ7-XQ8		SAME AS A2A2A1XQ7-XQ8	5- 31
A2A2A3		SINGLE SIDE BAND AUDIO MODULATION DETECTOR, PRINTED CIRCUIT BOARD W/ALL COMPONENTS ASSEMBLED FOR OPERATION, MFR 58189, P/N 666230-954	5- 29
A2A2A3C1		SAME AS A2A2A1C3	5- 29
A2A2A3C2-C3		CAPACITOR, FIXED, CERAMIC DIELECTRIC, 0.002 UF PLUS 100 PCT MINUS 20 PCT, 75 WVDC, MFR 86335, P/N K4000N.002Z	5- 29
A2A2A3C4		SAME AS A2A2A1C3	5- 29
A2A2A3C5		SAME AS A2A2A2C1-C2	5- 29
A2A2A3C6		SAME AS A2A2A2C3	5- 26
A2A2A3C7		CAPACITOR, FIXED, CERAMIC DIELECTRIC, 0.005 UF PLUS 100 PCT MINUS 20 PCT, 75 WVDC, MFR 86335, P/N K4000N.005Z	5- 29
A2A2A3CR1-CR2		SAME AS A2A2A1CR1,CR2	5- 29
A2A2A3L1		TRANSFORMER, VARIABLE, RADIO FREQUENCY, 500 KC, 0.620 IN. LG X 0.422 IN. DIA, MFR 58189, P/N 809000-229	5- 29
A2A2A3Q1-Q3		TRANSISTOR, MIL TYPE 2N1225	5- 29
A2A2A3R1		RESISTOR, MIL TYPE RC07GF130J	5- 29
A2A2A3R2		SAME AS A2A2A2R24	5- 29
A2A2A3R3		SAME AS A2A2A3R1	5- 29
A2A2A3R4		SAME AS A2A2A2R24	5- 29
A2A2A3R5		RESISTOR, MIL TYPE RC07GF202J	5- 29
A2A2A3R6		SAME AS A2A2A1R12	5- 29
A2A2A3T1		SAME AS A2A2A2T5	5- 29
A2A2A3TP1-TP2		NOT USED	
A2A2A3TP3		SAME AS A2A2A1TP1,TP2	5- 29
A2A2A3XQ1-XQ3		SAME AS A2A2A1XQ7-XQ8	5- 29
A2A3		RECEIVER ASSEMBLY, INTERMEDIATE FREQUENCY, MFR 58189, P/N 666230-011	5- 27
A2A3E1,E2		CONNECTOR, PLUG, ELECTRICAL, MFR 91146, P/N DM53741-5000	5- 30
A2A3E3		CONNECTOR, PLUG, ELECTRICAL, MFR 91146, P/N DM53741-5012	5- 30
A2A3MP1-MP2		SCREW, EXTERNALLY RELIEVED BODY, MFR 58189, P/N 666163-233	5- 30
A2A3P1		CONNECTOR, RECEPTACLE, ELECTRICAL, 2.729 IN. LG X 0.494 IN. W X 0.660 IN. H, MFR 91146, P/N DCM25W3PC31	5- 30
A2A3T1		TRANSFORMER, RADIO FREQUENCY, 1.187 IN. LG X 0.875 IN. W X 1.187 IN. H, MFR 16157, P/N J813	5- 27
A2A3A1		AGC AUDIO AMPLIFIER, PRINTED CIRCUIT BOARD, W/ALL COMPONENTS ASSEMBLED FOR OPERATION, MFR 58189, P/N 666230-959	5- 28
A2A3A1C1		CAPACITOR, FIXED, ELECTROLYTIC, 6.8 UF PORM 20 PCT, 35 WVDC, MFR 56289, P/N 150D685X0035B2	5- 28
A2A3A1C2		CAPACITOR, FIXED, ELECTROLYTIC, 15 UF PORM 20 PCT, 20 WVDC, MFR 56289, P/N 150D156X0020R2	5- 28

TABLE 6-2. MAINTENANCE PARTS LIST (Continued)

RADIO RECEIVER R-1051/URR

REF DESIG	NOTES	NAME AND DESCRIPTION	FIG. NO.
A2A3A1C3		CAPACITOR, FIXED, ELECTROLYTIC, 39 UF PORM 10 PCT, 10 WVDC, MFR 56289, P/N 150D396X9010B2	5- 28
A2A3A1C4		CAPACITOR, FIXED, METALIZED PAPER DIELECTRIC, 0.05 UF PORM 20 PCT, 200 WVDC, MFR 02777, P/N T2900-1	5- 28
A2A3A1C5		CAPACITOR, FIXED, ELECTROLYTIC, 22 UF PORM 20 PCT, 10 WVDC, MFR 56289, P/N 150D226X0010B2	5- 28
A2A3A1C6		CAPACITOR, FIXED, ELECTROLYTIC, 22 UF PORM 20 PCT, 35 WVDC, MFR 56289, P/N 150D226X0035R2	5- 28
A2A3A1C7		CAPACITOR, MIL TYPE CK15AX223M	5- 28
A2A3A1C8		CAPACITOR, MIL TYPE CM06F821G03	5- 28
A2A3A1C9		SAME AS A2A3A1C4	5- 28
A2A3A1C10		SAME AS A2A3A1C8	5- 28
A2A3A1C11		CAPACITOR, FIXED, METALIZED PAPER DIELECTRIC, 0.01 UF PORM 20 PCT, 200 WVDC, MFR 02777, P/N T2900-2	5- 28
A2A3A1C12-C13		SAME AS A2A3A1C2	5- 28
A2A3A1CR1,CR2		SEMICONDUCTOR DEVICE, DIODE, MIL TYPE 1N270	5- 28
A2A3A1CR3		SEMICONDUCTOR DEVICE, DIODE, MFR 80131, P/N 1N645	5- 28
A2A3A1CR4,CR5		SEMICONDUCTOR DEVICE, DIODE, MFR 80131, P/N 1N3064	5- 28
A2A3A1Q1-Q2		TRANSISTOR, MIL TYPE 2N1131	5- 28
A2A3A1Q3		TRANSISTOR, MFR 80131, P/N 2N706	5- 28
A2A3A1Q4		TRANSISTOR, MFR 04713, P/N 2N706/SM5584	5- 28
A2A3A1Q5		SAME AS A2A3A1Q3	5- 28
A2A3A1Q6		TRANSISTOR, MFR 80131, P/N 2N328A	5- 28
A2A3A1Q7-Q8		TRANSISTOR, MFR 80131, P/N 2N1225	5- 28
A2A3A1Q9		TRANSISTOR, MFR 80131, P/N 2N652	5- 28
A2A3A1R1		RESISTOR, MIL TYPE RC07GF622J	5- 28
A2A3A1R2		RESISTOR, MIL TYPE RC07GF102J	5- 28
A2A3A1R3		RESISTOR, MIL TYPE RC07GF272J	5- 28
A2A3A1R4		RESISTOR, MIL TYPE RC07GF182J	5- 28
A2A3A1R5		RESISTOR, MIL TYPE RC07GF511J	5- 28
A2A3A1R6		RESISTOR, VARIABLE, 1K OHMS PORM 5 PCT, 1W, MFR 80294, P/N 3250W66-102	5- 28
A2A3A1R7		RESISTOR, MIL TYPE RC07GF332J	5- 28
A2A3A1R8		RESISTOR, MIL TYPE RC07GF621J	5- 28
A2A3A1R9-R10		SAME AS A2A3A1R2	5- 28
A2A3A1R11		RESISTOR, MIL TYPE RC07GF752J	5- 28
A2A3A1R12		RESISTOR, MIL TYPE RC07GF103J	5- 28
A2A3A1R13		RESISTOR, MIL TYPE RC07GF682J	5- 28
A2A3A1R14		RESISTOR, MIL TYPE RC07GF331J	5- 28

TABLE 6-2. MAINTENANCE PARTS LIST (Continued)

RADIO RECEIVER R-1051/URR

REF DESIG	NOTES	NAME AND DESCRIPTION	FIG. NO.
A2A3A1R15		RESISTOR, MIL TYPE RC07GF362J	5- 28
A2A3A1R16		RESISTOR, MIL TYPE RC07GF512J	5- 28
A2A3A1R17		RESISTOR, MIL TYPE RC07GF683J	5- 28
A2A3A1R18		SAME AS A2A3A1R3	5- 28
A2A3A1R19		SAME AS A2A3A1R17	5- 28
A2A3A1R20		SAME AS A2A3A1R13	5- 28
A2A3A1R21		RESISTOR, MIL TYPE RC07GF392J	5- 28
A2A3A1R22		SAME AS A2A3A1R12	5- 28
A2A3A1R23		RESISTOR, MIL TYPE RC07GF153J	5- 28
A2A3A1R24		RESISTOR, MIL TYPE RC07GF201J	5- 28
A2A3A1R25		RESISTOR, VARIABLE, 5K OHMS PORM 5 PCT, 1W, MFR 80294, P/N 224P1-502	5- 28
A2A3A1R26-28		SAME AS A2A3A1R12	5- 28
A2A3A1R29		SAME AS A2A3A1R3	5- 28
A2A3A1R30		RESISTOR, MIL TYPE RC07GF181J	5- 28
A2A3A1R31		RESISTOR, MIL TYPE RC07GF472J	5- 28
A2A3A1RT1		RESISTOR, THERMAL, 5.29K OHMS PORM 5 PCT, MFR 75263, P/N RL2006-2930-120S4	5- 28
A2A3A1T1		TRANSFORMER, VARIABLE, RADIO FREQUENCY, 500 KC, 0.620 IN. LG X 0.422 IN. DIA, MFR 58189, P/N 809000-234	5- 28
A2A3A1T2		TRANSFORMER, VARIABLE, RADIO FREQUENCY, 500 KC, 0.620 IN. LG X 0.422 IN. DIA, MFR 58189, P/N 809000-235	5- 28
A2A3A1TP1,TP2		JACK, TIP, MFR 74970, P/N 105-751	5- 28
A2A3A1XQ1-XQ3		MOUNTING PAD, TRANSISTOR, 0.344 IN. DIA X 0.075 IN. THK, MFR 07047, P/N 10012	5- 28
A2A3A1XQ5		SAME AS A2A3A1XQ1-XQ3	5- 28
A2A3A1XQ7-XQ8		MOUNTING PAD, TRANSISTOR, 0.344 IN. DIA X 0.075 IN. THK, MFR 07047, P/N 10027	5- 28
A2A3A2		IF-AUDIO AMPLIFIER, PRINTED CIRCUIT BOARD, W/ALL COMPONENTS ASSEMBLED FOR OPERATION, MFR 58189, P/N 666230-949	5- 31
A2A3A2C1-C2		CAPACITOR, FIXED, METALIZED PAPER DIELECTRIC, 0.1 UF PORM 20 PCT, 200 WVDC, MFR 02777, P/N T2900-4	5- 31
A2A3A2C3		CAPACITOR, FIXED, MICA DIELECTRIC, 820 UUF PORM 2 PCT, 300 WVDC, MFR 72136, P/N DM15E821G300V	5- 31
A2A3A2C4-C5		SAME AS A2A3A1C4	5- 31
A2A3A2C6		SAME AS A2A3A2C1-C2	5- 31
A2A3A2C7		SAME AS A2A3A1C4	5- 31
A2A3A2C8		SAME AS A2A3A2C3	5- 31
A2A3A2C9		SAME AS A2A3A2C1-C2	5- 31
A2A3A2C10		SAME AS A2A3A1C4	5- 31
A2A3A2C11		SAME AS A2A3A2C3	5- 31

TABLE 6-2. MAINTENANCE PARTS LIST (Continued)

RADIO RECEIVER R-1051/URR

REF DESIG	NOTES	NAME AND DESCRIPTION	FIG. NO.
A2A3A2C12-C13		SAME AS A2A3A1C4	5- 31
A2A3A2C14		SAME AS A2A3A2C3	5- 31
A2A3A2C15		SAME AS A2A3A2C1-C2	5- 31
A2A3A2C16-C17		SAME AS A2A3A1C2	5- 31
A2A3A2C18		CAPACITOR, FIXED, ELECTROLYTIC, 47 UF PORM 20 PCT, 20 WVDC, MFR 56289, P/N 150D476X0020R2	5- 31
A2A3A2C19		SAME AS A2A3A1C1	5- 31
A2A3A2C20-22		SAME AS A2A3A1C2	5- 31
A2A3A2C23		CAPACITOR, FIXED, MICA DIELECTRIC, 1200 UUF PORM 5 PCT, 500 WVDC, MFR 72136, P/N DM20E122J500V	5- 31
A2A3A2C24		SAME AS A2A3A1C2	5- 31
A2A3A2C25		CAPACITOR, FIXED, ELECTROLYTIC, 47 UF PORM 20 PCT, 35 WVDC, MFR 56289 P/N 150D476X0035S2	5- 31
A2A3A2C26		CAPACITOR, FIXED, CERAMIC DIELECTRIC, 0.01 UF, PORM 20 PCT, 75 WVDC, MFR 86335, P/N SSM01-88	5- 31
A2A3A2CR1		SAME AS A2A3A1CR3	5- 31
A2A3A2L1		COIL, RADIO FREQUENCY, 10,000 UF, MFR 99800, P/N 1537-756	5- 31
A2A3A2Q1		SAME AS A2A3A1Q7-Q8	5- 31
A2A3A2Q2-Q3		SAME AS A2A3A1Q3	5- 31
A2A3A2Q4-Q6		SAME AS A2A3A1Q7-Q8	5- 31
A2A3A2Q7-Q8		SAME AS A2A3A1Q9	5- 31
A2A3A2Q9-Q10		TRANSISTOR, MFR 80131, P/N 2N1183A	5- 31
A2A3A2R1		SAME AS A2A3A1R23	5- 31
A2A3A2R2-R3		SAME AS A2A3A1R12	5- 31
A2A3A2R4		NOT USED	
A2A3A2R5		RESISTOR, MIL TYPE RC07GF151J	5- 31
A2A3A2R6		RESISTOR, MIL TYPE RC07GF471J	5- 31
A2A3A2R7		RESISTOR, MIL TYPE RC07GF561J	5- 31
A2A3A2R8		SAME AS A2A3A1R2	5- 31
A2A3A2R9		RESISTOR, MIL TYPE RC07GF470J	5- 31
A2A3A2R10		SAME AS A2A3A1R23	5- 31
A2A3A2R11-R12		SAME AS A2A3A1R12	5- 31
A2A3A2R13		RESISTOR, MIL TYPE RC07GF220J	5- 31
A2A3A2R14		SAME AS A2A3A1R23	5- 31
A2A3A2R15-R16		SAME AS A2A3A1R12	5- 31
A2A3A2R17		RESISTOR, MIL TYPE RC07GF101J	5- 31
A2A3A2R18		RESISTOR, MIL TYPE RC07GF620J	5- 31
A2A3A2R19		SAME AS A2A3A1R23	5- 31

TABLE 6-2. MAINTENANCE PARTS LIST (Continued)

RADIO RECEIVER R-1051/URR

REF DESIG	NOTES	NAME AND DESCRIPTION	FIG. NO.
A2A3A2R20-R21		SAME AS A2A3A1R12	5- 31
A2A3A2R22		RESISTOR, VARIABLE, 1K OHMS PORM 5 PCT, 1W, MFR 80294, P/N 3250W1-102	5- 31
A2A3A2R23		RESISTOR, MIL TYPE RC07GF510J	5- 31
A2A3A2R24		RESISTOR, MIL TYPE RC07GF122J	5- 31
A2A3A2R25		RESISTOR, MIL TYPE RC07GF113J	5- 31
A2A3A2R26		SAME AS A2A3A1R5	5- 31
A2A3A2R27		SAME AS A2A3A1R2	5- 31
A2A3A2R28		RESISTOR, MIL TYPE RC07GF163J	5- 31
A2A3A2R29		SAME AS A2A3A1R31	5- 31
A2A3A2R30		SAME AS A2A3A1R1	5- 31
A2A3A2R31		SAME AS A2A3A2R18	5- 31
A2A3A2R32		SAME AS A2A3A2R7	5- 31
A2A3A2R33		SAME AS A2A3A1R8	5- 31
A2A3A2R34		RESISTOR, MIL TYPE RC07GF821J	5- 31
A2A3A2R35		SAME AS A2A3A2R9	5- 31
A2A3A2R36		SAME AS A2A3A1R12	5- 31
A2A3A2R37		RESISTOR, MIL TYPE RC20GF101J	5- 31
A2A3A2R38		SAME AS A2A3A1R13	5- 31
A2A3A2R39		SAME AS A2A3A1R14	5- 31
A2A3A2T1		TRANSFORMER, VARIABLE, RADIO FREQUENCY, 500 KC, 0.620 IN. LG X 0.422 IN. DIA, MFR 58189, P/N 809000-230	5- 31
A2A3A2T2		TRANSFORMER, VARIABLE, RADIO FREQUENCY, 500 KC, 0.620 IN. LG X 0.422 IN. DIA, MFR 58189, P/N 809000-231	5- 31
A2A3A2T3		TRANSFORMER, VARIABLE, RADIO FREQUENCY, 500 KC, 0.620 IN. LG X 0.422 IN. DIA, MFR 58189, P/N 809000-232	5- 31
A2A3A2T4		TRANSFORMER, VARIABLE, RADIO FREQUENCY, 500 KC, 0.620 IN. LG X 0.422 IN. DIA, MFR 58189, P/N 809000-233	5- 31
A2A3A2T5		TRANSFORMER, AUDIO FREQUENCY, 0.875 IN. LG X 0.781 IN. WD X 0.531 IN. H, MFR 00348, P/N M5153	5- 31
A2A3A2XQ1-XQ4		SAME AS A2A3A1XQ1-XQ3	5- 31
A2A3A2XQ7-XQ8		SAME AS A2A3A1XQ7-XQ8	5- 31
A2A3A3		SINGLE SIDE BAND AUDIO MODULATION DETECTOR, PRINTED CIRCUIT BOARD W/ALL COMPONENTS ASSEMBLED FOR OPERATION, MFR 58189, P/N 666230-954	5- 29
A2A3A3C1		SAME AS A2A3A1C3	5- 29
A2A3A3C2-C3		CAPACITOR, FIXED, CERAMIC DIELECTRIC, 0.002 UF PLUS 100 PCT MINUS 20 PCT, 75 WVDC, MFR 86335, P/N K4000N.002Z	5- 29
A2A3A3C4		SAME AS A2A3A1C3	5- 29
A2A3A3C5		SAME AS A2A3A2C1-C2	5- 29
A2A3A3C6		SAME AS A2A3A2C3	5- 29

TABLE 6-2. MAINTENANCE PARTS LIST (Continued)

RADIO RECEIVER R-1051/URR

REF DESIG	NOTES	NAME AND DESCRIPTION	FIG. NO.
A2A3A3C7		CAPACITOR, FIXED, CERAMIC DIELECTRIC, 0.005 UF PLUS 100 PCT MINUS 20 PCT, 75 WVDC, MFR 86335, P/N K4000N.005Z	5- 29
A2A3A3CR1-CR2		SAME AS A2A3A1CR1,CR2	5- 29
A2A3A3L1		TRANSFORMER, VARIABLE, RADIO FREQUENCY, 500 KC, 0.620 IN. LG X 0.422 IN. DIA, MFR 58189, P/N 809000-229	5- 29
A2A3A3Q1-Q3		TRANSISTOR, MIL TYPE 2N1225	5- 29
A2A3A3R1		RESISTOR, MIL TYPE RC07GF130J	5- 29
A2A3A3R2		SAME AS A2A3A2R24	5- 29
A2A3A3R3		SAME AS A2A3A3R1	5- 29
A2A3A3R4		SAME AS A2A3A2R24	5- 29
A2A3A3R5		RESISTOR, MIL TYPE RC07GF202J	5- 29
A2A3A3R6		SAME AS A2A3A1R12	5- 29
A2A3A3T1		SAME AS A2A3A2T5	5- 29
A2A3A3TP1-TP2		NOT USED	
A2A3A3TP3		SAME AS A2A3A1TP1,TP2	5- 29
A2A3A3XQ1-XQ3		SAME AS A2A3A1XQ7-XQ8	5- 29
A2A4		AMPLIFIER, RADIO FREQUENCY, MFR 58189, P/N 666230-019	5- 32
A2A481		MOTOR, DIRECT CURRENT, CONTINUOUS DUTY, 26 VDC, MFR 05106, P/N 43A333	5- 53
A2A4C1-C2		CAPACITOR, FIXED, CERAMIC DIELECTRIC, 0.01 UF, PORM 20 PCT, 75 WVDC, MFR 86335, P/N SSM01-88	5-51A
A2A4C3		CAPACITOR, MIL TYPE CK63AW103M	5-51A
A2A4C4		SAME AS A2A4C1-C2	5-51A
A2A4C5		CAPACITOR, FIXED, MICA DIELECTRIC, 330 UUF PORM 5 PCT, 500 WVDC, MFR 72136, P/N DM15F331J500V	5-51A
A2A4C6		SAME AS A2A4C1-C2	5-51A
A2A4C7		SAME AS A2A4C3	5-51A
A2A4C8		CAPACITOR, FIXED, MICA DIELECTRIC, 356 UUF PORM 1/2 PCT, 500 WVDC, MFR 72136, P/N DM15F3560D500V	5-51A
A2A4C9		CAPACITOR, FIXED, MICA DIELECTRIC, 775 UUF PORM 1/2 PCT, 300 WVDC, MFR 72136, P/N DM15F7750D300V	5-51A
A2A4C10		SAME AS A2A4C1-C2	5-51A
A2A4C11		SAME AS A2A4C8	5-51A
A2A4C12		SAME AS A2A4C9	5-51A
A2A4C13		SAME AS A2A4C8	5-51A
A2A4C14		SAME AS A2A4C9	5-51A
A2A4C15-C18		SAME AS A2A4C1-C2	5-51A
A2A4C19		CAPACITOR, FIXED, MICA DIELECTRIC, 369 UUF PORM 1/2 PCT, 500 WVDC, MFR 72136, P/N DM15F3690D500V	5-51A
A2A4C20		CAPACITOR, FIXED, MICA DIELECTRIC, 784 UUF PORM 1/2 PCT, 300 WVDC, MFR 72136, P/N DM15F7840D300V	5-51A

TABLE 6-2. MAINTENANCE PARTS LIST (Continued)

RADIO RECEIVER R-1051/URR

REF DESIG	NOTES	NAME AND DESCRIPTION	FIG. NO.
A2A4K1		RELAY, ARMATURE, 3 AMPS AT 28VDC, 1.320 IN. LG X 0.375 IN. W X 1.085 IN. H, MFR 02289, P/N 2F2426	5- 32
A2A4MP1		GEAR ASSEMBLY, TURRET DRIVE, MFR 58189, P/N 666230-250	5- 32
A2A4MP2-MP3		SHIELD, ELECTRON TUBE, MFR 98978, P/N TR5-5020-21B	5- 51
A2A4MP4-MP5		GEAR, SPUR, 170 TEETH, 96 DIAMETRAL PITCH, 20 DEGREE PRESSURE ANGLE, MFR 58189, P/N 666230-271	5- 53
A2A4MP6		SHAFT, CONTROL KNOB, MFR 58189, P/N 666230-270	5- 53
A2A4MP7		BEARING, MODIFIED, 5.500 IN. DIA X 0.250 IN. THK, MFR 58189, P/N 666162-739	5- 53
A2A4MP8-MP9		PLATE, STATOR, MFR 58189, P/N 666230-615	5-51A
A2A4MP10-MP11		PLATE, STATOR, MFR 58189, P/N 666230-614	5-51A
A2A4MP12		PLATE, STATOR, MFR 58189, P/N 666230-616	5-51A
A2A4MP13-MP14		PLATE, STATOR, MFR 58189, P/N 666162-666	5-51A
A2A4MP15		SAME AS A2A4MP10-MP11	5-51A
A2A4MP16		PLATE, STATOR, MFR 58189, P/N 666162-673	5-51A
A2A4MP17		PLATE, STATOR, MFR 58189, P/N 666162-665	5-51A
A2A4MP18		PLATE, STATOR, MFR 58189, P/N 666162-664	5-51A
A2A4MP19		SAME AS A2A4MP8-MP9	5-51A
A2A4MP20		PLATE, STATOR, MFR 58189, P/N 666230-617	5-51A
A2A4MP21		COUPLING ASSEMBLY, MFR 58189, P/N 666230-240	5- 53
A2A4MP22		GEAR, SPUR, MFR 58189, P/N 666162-728	5- 53
A2A4MP23-MP26		SCREW, EXTERNALLY RELIEVED BODY, MFR 58189, P/N 666163-233	5- 51
A2A4MP27-MP30		CONNECTOR, PLUG, ELECTRICAL, MFR 91146, P/N DM53741-5000	5- 51
A2A4MP31		CONNECTOR, PLUG, ELECTRICAL, MFR 91146, P/N DM53740-5008	5- 51
A2A4P1		CONNECTOR, RECEPTACLE, ELECTRICAL, 1.541 IN. LG X 0.494 IN. W X 0.656 IN. H, MFR 91146, P/N DAM15PC31	5- 53
A2A4P2		CONNECTOR, RECEPTACLE, ELECTRICAL, 2.729 IN. LG X 0.494 IN. W X 0.660 IN. H, MFR 91146, P/N DCM17W5PC31F115	5- 51
A2A4R1		RESISTOR, MIL TYPE RC07GF473J	5-51A
A2A4R2		RESISTOR, MIL TYPE RC07GF510J	5-51A
A2A4R3		RESISTOR, MIL TYPE RC07GF622J	5-51A
A2A4V1		ELECTRON TUBE, MIL TYPE 6BZ6	5- 51
A2A4V2		ELECTRON TUBE, MIL TYPE 6AN5WA	5- 51
A2A4XV1-XV2		SOCKET, MIL TYPE TS102C01	5- 51
A2A4A1		AMPLIFIER SUBASSEMBLY, RADIO FREQUENCY, PRINTED CIRCUIT BOARD W/ALL COMPONENTS ASSEMBLED FOR OPERATION, MFR 58189, P/N 666230-521	5- 52
A2A4A1C1		SAME AS A2A4C1-C2	5- 52
A2A4A1C2-C3		CAPACITOR, FIXED, ELECTROLYTIC, 15 UF PORM 20 PCT, 20 WVDC, MFR 56289, P/N 150D156X0020R2	5- 52

TABLE 6-2. MAINTENANCE PARTS LIST (Continued)

RADIO RECEIVER R-1051/URR

REF DESIG	NOTES	NAME AND DESCRIPTION	FIG. NO.
A2A4A1R1		RESISTOR, MIL TYPE RC07GF623J	5- 52
A2A4A1R2		RESISTOR, MIL TYPE RC07GF753J	5- 52
A2A4A1R3		RESISTOR, MIL TYPE RC07GF151J	5- 52
A2A4A1R4		RESISTOR, MIL TYPE RC20GF621J	5- 52
A2A4A1R5		RESISTOR, MIL TYPE RC20GF~~181J~~ 121J	5- 52
A2A4A1R6		RESISTOR, MIL TYPE RC20GF121J	5- 52
A2A4A2		MEGACYCLE ASSEMBLY, PRINTED CIRCUIT BOARD W/ALL COMPONENTS ASSEMBLED FOR OPERATION, MFR 58189, P/N 666230-286	5- 50
A2A4A2C1		CAPACITOR, FIXED, CERAMIC DIELECTRIC, 2.2 UUF PORM 5 PCT, 500 WVDC, MFR 78488, P/N GA2R2J500V	5- 50
A2A4A2C2		CAPACITOR, FIXED, MICA DIELECTRIC, 126 UUF PORM 1/2 PCT, 500 WVDC, MFR 72136, P/N DM15F1260D500V	5- 50
A2A4A2C3		CAPACITOR, FIXED, MICA DIELECTRIC, 132 UUF PORM 1/2 PCT, 500 WVDC, MFR 72136, P/N DM15F1320D500V	5- 50
A2A4A2C4		CAPACITOR, FIXED, MICA DIELECTRIC, 250 UUF PORM 1/2 PCT, 500 WVDC, MFR 72136, P/N DM15F251D500V	5- 50
A2A4A2T1		TRANSFORMER, VARIABLE, RADIO FREQUENCY, 12 MC, 0.620 IN. LG X 0.422 IN. DIA, MFR 58189, P/N 809000-264	5- 50
A2A4A2T2		TRANSFORMER, VARIABLE, RADIO FREQUENCY, 12 MC, 0.620 IN. LG X 0.422 IN. DIA, MFR 58189, P/N 809000-320	5- 50
A2A4A2T3		TRANSFORMER, VARIABLE, RADIO FREQUENCY, 7 MC, 0.620 IN. LG X 0.422 IN. DIA, MFR 58189, P/N 809000-287	5- 50
A2A4A2T4		TRANSFORMER, VARIABLE, RADIO FREQUENCY, 2 MC, 0.756 IN. LG X 0.535 IN. DIA, MFR 58189, P/N 809000-201	5- 50
A2A4A3		MEGACYCLE ASSEMBLY, PRINTED CIRCUIT BOARD W/ALL COMPONENTS ASSEMBLED FOR OPERATION, MFR 58189, P/N 666230-287	5- 34
A2A4A3C1		CAPACITOR, FIXED, CERAMIC DIELECTRIC, 2 UUF PORM 5 PCT, 500 WVDC, MFR 78488, P/N GA2R0J500V	5- 34
A2A4A3C2		CAPACITOR, FIXED, MICA DIELECTRIC, 115 UUF PORM 1/2 PCT, 500 WVDC, MFR 72136, P/N DM15F1150D500V	5- 34
A2A4A3C3		CAPACITOR, FIXED, MICA DIELECTRIC, 120 UUF PORM 1/2 PCT, 500 WVDC, MFR 72136, P/N DM15F121D500V	5- 34
A2A4A3C4		CAPACITOR, FIXED, MICA DIELECTRIC, 208 UUF PORM 1/2 PCT, 500 WVDC, MFR 72136, P/N DM15F2080D500V	5- 34
A2A4A3C5		CAPACITOR, FIXED, MICA DIELECTRIC, 1253 UUF PORM 1/2 PCT, 300 WVDC, MFR 72136, P/N DM20F12530D300V	5- 34
A2A4A3T1		TRANSFORMER, VARIABLE, RADIO FREQUENCY, 13 MC, 0.620 IN. LG X 0.422 IN. DIA, MFR 58189, P/N 809000-265	5- 34
A2A4A3T2		TRANSFORMER, VARIABLE, RADIO FREQUENCY, 13 MC, 0.620 IN. LG X 0.422 IN. DIA, MFR 58189, P/N 809000-321	5- 34
A2A4A3T3		TRANSFORMER, VARIABLE, RADIO FREQUENCY, 8 MC, 0.620 IN. LG X 0.422 IN. DIA, MFR 58189, P/N 809000-308	5- 34
A2A4A3T4		TRANSFORMER, VARIABLE, RADIO FREQUENCY, 3 MC, 0.756 IN. LG X 0.535 IN. DIA, MFR 58189, P/N 809000-202	5- 34
A2A4A4		MEGACYCLE ASSEMBLY, PRINTED CIRCUIT BOARD W/ALL COMPONENTS ASSEMBLED FOR OPERATION, MFR 58189, P/N 666230-288	5- 35

TABLE 6-2. MAINTENANCE PARTS LIST (Continued)

RADIO RECEIVER R-1051/URR

REF DESIG	NOTES	NAME AND DESCRIPTION	FIG. NO.
A2A4A4C1		SAME AS A2A4A3C1	5- 35
A2A4A4C2		CAPACITOR, FIXED, MICA DIELECTRIC, 105 UUF PORM 1/2 PCT, 500 WVDC, MFR 72136, P/N DM15F1050D500V	5- 35
A2A4A4C3		CAPACITOR, FIXED, MICA DIELECTRIC, 111 UUF PORM 1/2 PCT, 500 WVDC, MFR 72136, P/N DM15F1110D500V	5- 35
A2A4A4C4		CAPACITOR, FIXED, MICA DIELECTRIC, 179 UUF PORM 1/2 PCT, 500 WVDC, MFR 72136, P/N DM15F1790D500V	5- 35
A2A4A4C5		CAPACITOR, FIXED, MICA DIELECTRIC, 629 UUF PORM 1/2 PCT, 300 WVDC, MFR 72136, P/N DM15F6290D300V	5- 35
A2A4A4T1		TRANSFORMER, VARIABLE, RADIO FREQUENCY, 14 MC, 0.620 IN. LG X 0.422 IN. DIA, MFR 58189, P/N 809000-266	5- 35
A2A4A4T2		TRANSFORMER, VARIABLE, RADIO FREQUENCY, 14 MC, 0.620 IN. LG X 0.422 IN. DIA, MFR 58189, P/N 809000-322	5- 35
A2A4A4T3		TRANSFORMER, VARIABLE, RADIO FREQUENCY, 9 MC, 0.620 IN. LG X 0.422 IN. DIA, MFR 58189, P/N 809000-288	5- 35
A2A4A4T4		TRANSFORMER, VARIABLE, RADIO FREQUENCY, 4 MC, 0.756 IN. LG X 0.535 IN. DIA, MFR 58189, P/N 809000-203	5- 35
A2A4A5		MEGACYCLE ASSEMBLY, PRINTED CIRCUIT BOARD W/ALL COMPONENTS ASSEMBLED FOR OPERATION, MFR 58189, P/N 666230-289	5- 36
A2A4A5C1		SAME AS A2A4A3C1	5- 36
A2A4A5C2		CAPACITOR, FIXED, MICA DIELECTRIC, 97 UUF PORM 1 PCT, 500 WVDC, MFR 72136, P/N DM15F970F500V	5- 36
A2A4A5C3		CAPACITOR, FIXED, MICA DIELECTRIC, 103 UUF PORM 1/2 PCT, 500 WVDC, MFR 72136, P/N DM15F1030D500V	5- 36
A2A4A5C4		CAPACITOR, FIXED, MICA DIELECTRIC, 157 UUF PORM 1/2 PCT, 500 WVDC, MFR 72136, P/N DM15F1570D500V	5- 36
A2A4A5C5		CAPACITOR, FIXED, MICA DIELECTRIC, 422 UUF PORM 1/2 PCT, 300 WVDC, MFR 72136, P/N DM15F4220D300V	5- 36
A2A4A5T1		TRANSFORMER, VARIABLE, RADIO FREQUENCY, 15 MC, 0.620 IN. LG X 0.422 IN. DIA, MFR 58189, P/N 809000-267	5- 36
A2A4A5T2		TRANSFORMER, VARIABLE, RADIO FREQUENCY, 15 MC, 0.620 IN. LG X 0.422 IN. DIA, MFR 58189, P/N 809000-323	5- 36
A2A4A5T3		TRANSFORMER, VARIABLE, RADIO FREQUENCY, 10 MC, 0.620 IN. LG X 0.442 IN. DIA, MFR 58189, P/N 809000-289	5- 36
A2A4A5T4		TRANSFORMER, VARIABLE, RADIO FREQUENCY, 5 MC, 0.756 IN. LG X 0.535 IN. DIA, MFR 58189, P/N 809000-204	5- 36
A2A4A6		MEGACYCLE ASSEMBLY, PRINTED CIRCUIT BOARD W/ALL COMPONENTS ASSEMBLED FOR OPERATION, MFR 58189, P/N 666230-290	5- 37
A2A4A6C1		SAME AS A2A4A3C1	5- 37
A2A4A6C2		CAPACITOR, FIXED, MICA DIELECTRIC, 91 UUF PORM 1 PCT, 500 WVDC, MFR 72136, P/N DM15E910F500V	5- 37
A2A4A6C3		CAPACITOR, FIXED, MICA DIELECTRIC, 96 UUF PORM 1 PCT, 500 WVDC, MFR 72136, P/N DM15F960F500V	5- 37
A2A4A6C4		CAPACITOR, FIXED, MICA DIELECTRIC, 140 UUF PORM 1/2 PCT, 500 WVDC, MFR 72136, P/N DM15F141D500V	5- 37
A2A4A6C5		CAPACITOR, FIXED, MICA DIELECTRIC, 318 UUF PORM 1/2 PCT, 500 WVDC, MFR 72136, P/N DM15F318OD500V	5- 37

TABLE 6-2. MAINTENANCE PARTS LIST (Continued)

RADIO RECEIVER R-1051/URR

REF DESIG	NOTES	NAME AND DESCRIPTION	FIG. NO.
A2A4A6T1		TRANSFORMER, VARIABLE, RADIO FREQUENCY, 16 MC, 0.620 IN. LG X 0.422 IN. DIA, MFR 58189, P/N 809000-268	5- 37
A2A4A6T2		TRANSFORMER, VARIABLE, RADIO FREQUENCY, 16 MC, 0.620 IN. LG X 0.422 IN. DIA, MFR 58189, P/N 809000-324	5- 37
A2A4A6T3		TRANSFORMER, VARIABLE, RADIO FREQUENCY, 11 MC, 0.620 IN. LG X 0.442 IN. DIA, MFR 58189, P/N 809000-290	5- 37
A2A4A6T4		TRANSFORMER, VARIABLE, RADIO FREQUENCY, 6 MC, 0.756 IN. LG X 0.535 IN. DIA, MFR 58189, P/N 809000-205	5- 37
A2A4A7		MEGACYCLE ASSEMBLY, PRINTED CIRCUIT BOARD W/ALL COMPONENTS ASSEMBLED FOR OPERATION, MFR 58189, P/N 666230-291	5- 37
A2A4A7C1		SAME AS A2A4A3C1	5- 37
A2A4A7C2		CAPACITOR, FIXED, MICA DIELECTRIC, 85 UUF PORM 1 PCT, 500 WVDC, MFR 72136, P/N DM15F850F500V	5- 37
A2A4A7C3		CAPACITOR, FIXED, MICA DIELECTRIC, 90 UUF PORM 1 PCT, 500 WVDC, MFR 72136, P/N DM15F900F500V	5- 37
A2A4A7C4		SAME AS A2A4A2C2	5- 37
A2A4A7C5		CAPACITOR, FIXED, MICA DIELECTRIC, 256 UUF PORM 1/2 PCT, 500 WVDC, MFR 72136, P/N DM15F2560D500V	5- 37
A2A4A7T1		TRANSFORMER, VARIABLE, RADIO FREQUENCY, 17 MC, 0.620 IN. LG X 0.422 IN. DIA, MFR 58189, P/N 809000-269	5- 37
A2A4A7T2		TRANSFORMER, VARIABLE, RADIO FREQUENCY, 17 MC, 0.620 IN. LG X 0.422 IN. DIA, MFR 58189, P/N 809000-325	5- 37
A2A4A7T3		TRANSFORMER, VARIABLE, RADIO FREQUENCY, 12 MC, 0.620 IN. LG X 0.442 IN. DIA, MFR 58189, P/N 809000-291	5- 37
A2A4A7T4		TRANSFORMER, VARIABLE, RADIO FREQUENCY, 7 MC, 0.756 IN. LG X 0.535 IN. DIA, MFR 58189, P/N 809000-206	5- 37
A2A4A8		MEGACYCLE ASSEMBLY, PRINTED CIRCUIT BOARD W/ALL COMPONENTS ASSEMBLED FOR OPERATION, MFR 58189, P/N 666230-292	5- 36
A2A4A8C1		CAPACITOR, FIXED, CERAMIC DIELECTRIC, 1.8 UUF PORM 5 PCT, 500 WVDC, MFR 78488, P/N GA1R8J500V	5- 36
A2A4A8C2		CAPACITOR, FIXED, MICA DIELECTRIC, 80 UUF PORM 1 PCT, 500 WVDC, MFR 72136, P/N DM15E800F500V	5- 36
A2A4A8C3		SAME AS A2A4A7C2	5- 36
A2A4A8C4		SAME AS A2A4A3C2	5- 36
A2A4A8C5		CAPACITOR, FIXED, MICA DIELECTRIC, 214 UUF PORM 1/2 PCT, 500 WVDC, MFR 72136, P/N DM15F2140D500V	5- 36
A2A4A8T1		TRANSFORMER, VARIABLE, RADIO FREQUENCY, 18 MC, 0.620 IN. LG X 0.422 IN. DIA, MFR 58189, P/N 809000-270	5- 36
A2A4A8T2		TRANSFORMER, VARIABLE, RADIO FREQUENCY, 18 MC, 0.620 IN. LG X 0.422 IN. DIA, MFR 58189, P/N 809000-326	5- 36
A2A4A8T3		TRANSFORMER, VARIABLE, RADIO FREQUENCY, 13 MC, 0.620 IN. LG X 0.442 IN. DIA, MFR 58189, P/N 809000-292	5- 36
A2A4A8T4		TRANSFORMER, VARIABLE, RADIO FREQUENCY, 8 MC, 0.756 IN. LG X 0.535 IN. DIA, MFR 58189, P/N 809000-207	5- 36
A2A4A9		MEGACYCLE ASSEMBLY, PRINTED CIRCUIT BOARD W/ALL COMPONENTS ASSEMBLED FOR OPERATION, MFR 58189, P/N 666230-293	5- 38

TABLE 6-2. MAINTENANCE PARTS LIST (Continued)

RADIO RECEIVER R-1051/URR

REF DESIG	NOTES	NAME AND DESCRIPTION	FIG. NO.
A2A4A9C1		SAME AS A2A4A8C1	5- 38
A2A4A9C2		CAPACITOR, FIXED, MICA DIELECTRIC, 75 UUF PORM 1 PCT, 500 WVDC, MFR 72136, P/N DM15E750F500V	5- 38
A2A4A9C3		SAME AS A2A4A8C2	5- 38
A2A4A9C4		SAME AS A2A4A4C2	5- 38
A2A4A9C5		CAPACITOR, FIXED, MICA DIELECTRIC, 185 UUF PORM 1/2 PCT, 500 WVDC, MFR 72136, P/N DM15F185OD500V	5- 38
A2A4A9T1		TRANSFORMER, VARIABLE, RADIO FREQUENCY, 19 MC, 0.620 IN. LG X 0.422 IN. DIA, MFR 58189, P/N 809000-271	5- 38
A2A4A9T2		TRANSFORMER, VARIABLE, RADIO FREQUENCY, 19 MC, 0.620 IN. LG X 0.422 IN. DIA, MFR 58189, P/N 809000-327	5- 38
A2A4A9T3		TRANSFORMER, VARIABLE, RADIO FREQUENCY, 14 MC, 0.620 IN. LG X 0.442 IN. DIA, MFR 58189, P/N 809000-293	5- 38
A2A4A9T4		TRANSFORMER, VARIABLE, RADIO FREQUENCY, 9 MC, 0.756 IN. LG X 0.535 IN. DIA, MFR 58189, P/N 809000-208	5- 38
A2A4A9Y1		CRYSTAL UNIT, QUARTZ, 21.000 MC, 0.418 IN. LG X 0.166 IN. W X 0.515 IN. H EXCLUDING LEADS, MFR 58189, P/N 666162-598	5- 38
A2A4A10		MEGACYCLE ASSEMBLY, PRINTED CIRCUIT BOARD W/ALL COMPONENTS ASSEMBLED FOR OPERATION, MFR 58189, P/N 666230-294	5- 39
A2A4A10C1		SAME AS A2A4A8C1	5- 39
A2A4A10C2		CAPACITOR, FIXED, MICA DIELECTRIC, 71 UUF PORM 1 PCT, 500 WVDC, MFR 72136, P/N DM15E710F500V	5- 39
A2A4A10C3		CAPACITOR, FIXED, MICA DIELECTRIC, 76 UUF PORM 1 PCT, 500 WVDC, MFR 72136, P/N DM15E760F500V	5- 39
A2A4A10C4		SAME AS A2A4A5C2	5- 39
A2A4A10C5		CAPACITOR, FIXED, MICA DIELECTRIC, 163 UUF PORM 1/2 PCT, 500 WVDC, MFR 72136, P/N DM15F1630D500V	5- 39
A2A4A10T1		TRANSFORMER, VARIABLE, RADIO FREQUENCY, 20 MC, 0.620 IN. LG X 0.422 IN. DIA, MFR 58189, P/N 809000-272	5- 39
A2A4A10T2		TRANSFORMER, VARIABLE, RADIO FREQUENCY, 20 MC, 0.620 IN. LG X 0.422 IN. DIA, MFR 58189, P/N 809000-328	5- 39
A2A4A10T3		TRANSFORMER, VARIABLE, RADIO FREQUENCY, 15 MC, 0.620 IN. LG X 0.442 IN. DIA, MFR 58189, P/N 809000-294	5- 39
A2A4A10T4		TRANSFORMER, VARIABLE, RADIO FREQUENCY, 10 MC, 0.756 IN. LG X 0.535 IN. DIA, MFR 58189, P/N 809000-209	5- 39
A2A4A10Y1		CRYSTAL UNIT, QUARTZ, 19.000 MC, 0.418 IN. LG X 0.166 IN. W X 0.515 IN. H EXCLUDING LEADS, MFR 58189, P/N 666162-597	5- 39
A2A4A11		MEGACYCLE ASSEMBLY, PRINTED CIRCUIT BOARD W/ALL COMPONENTS ASSEMBLED FOR OPERATION, MFR 58189, P/N 666230-295	5- 40
A2A4A11C1		SAME AS A2A4A3C1	5- 40
A2A4A11C2		CAPACITOR, FIXED, MICA DIELECTRIC, 67 UUF PORM 1 PCT, 500 WVDC, MFR 72136, P/N DM15E670F500V	5- 40
A2A4A11C3		CAPACITOR, FIXED, MICA DIELECTRIC, 73 UUF PORM 1 PCT, 500 WVDC, MFR 72136, P/N DM15E730F500V	5- 40
A2A4A11C4		SAME AS A2A4A6C2	5- 40

TABLE 6-2. MAINTENANCE PARTS LIST (Continued)

RADIO RECEIVER R-1051/URR

REF DESIG	NOTES	NAME AND DESCRIPTION	FIG. NO.
A2A4A11C5		CAPACITOR, FIXED, MICA DIELECTRIC, 146 UUF PORM 1/2 PCT, 500 WVDC, MFR 72136, P/N DM15F146OD500V	5- 40
A2A4A11T1		TRANSFORMER, VARIABLE, RADIO FREQUENCY, 21 MC, 0.620 IN. LG X 0.422 IN. DIA, MFR 58189, P/N 809000-273	5- 40
A2A4A11T2		TRANSFORMER, VARIABLE, RADIO FREQUENCY, 21 MC, 0.620 IN. LG X 0.422 IN. DIA, MFR 58189, P/N 809000-329	5- 40
A2A4A11T3		TRANSFORMER, VARIABLE, RADIO FREQUENCY, 16 MC, 0.620 IN. LG X 0.422 IN. DIA, MFR 58189, P/N 809000-295	5- 40
A2A4A11T4		TRANSFORMER, VARIABLE, RADIO FREQUENCY, 11 MC, 0.756 IN. LG X 0.535 IN. DIA, MFR 58189, P/N 809000-210	5- 40
A2A4A12		MEGACYCLE ASSEMBLY, PRINTED CIRCUIT BOARD W/ALL COMPONENTS ASSEMBLED FOR OPERATION, MFR 58189, P/N 666230-296	5- 41
A2A4A12C1		SAME AS A2A4A3C1	5- 41
A2A4A12C2		CAPACITOR, FIXED, MICA DIELECTRIC, 64 UUF PORM 1 PCT, 500 WVDC, MFR 72136, P/N DM15E640F500V	5- 41
A2A4A12C3		CAPACITOR, FIXED, MICA DIELECTRIC, 68 UUF PORM 1 PCT, 500 WVDC, MFR 72136, P/N DM15E680F500V	5- 41
A2A4A12C4		SAME AS A2A4A7C2	5- 41
A2A4A12C5		SAME AS A2A4A2C3	5- 41
A2A4A12T1		TRANSFORMER, VARIABLE, RADIO FREQUENCY, 22 MC, 0.620 IN. LG X 0.422 IN. DIA, MFR 58189, P/N 809000-274	5- 41
A2A4A12T2		TRANSFORMER, VARIABLE, RADIO FREQUENCY, 22 MC, 0.620 IN. LG X 0.422 IN. DIA, MFR 58189, P/N 809000-330	5- 41
A2A4A12T3		TRANSFORMER, VARIABLE, RADIO FREQUENCY, 17 MC, 0.620 IN. LG X 0.422 IN. DIA, MFR 58189, P/N 809000-296	5- 41
A2A4A12T4		TRANSFORMER, VARIABLE, RADIO FREQUENCY, 12 MC, 0.756 IN. LG X 0.535 IN. DIA, MFR 58189, P/N 809000-211	5- 41
A2A4A13		MEGACYCLE ASSEMBLY, PRINTED CIRCUIT BOARD W/ALL COMPONENTS ASSEMBLED FOR OPERATION, MFR 58189, P/N 666230-297	5- 41
A2A4A13C1		SAME AS A2A4A3C1	5- 41
A2A4A13C2		CAPACITOR, FIXED, MICA DIELECTRIC, 61 UUF PORM 1 PCT, 500 WVDC, MFR 72136, P/N DM15E610F500V	5- 41
A2A4A13C3		CAPACITOR, FIXED, MICA DIELECTRIC, 66 UUF PORM 1 PCT, 500 WVDC, MFR 72136, P/N DM15E660E500V	5- 41
A2A4A13C4		SAME AS A2A4A8C2	5- 41
A2A4A13C5		SAME AS A2A4A3C3	5- 41
A2A4A13T1		TRANSFORMER, VARIABLE, RADIO FREQUENCY, 23 MC, 0.620 IN. LG X 0.422 IN. DIA, MFR 58189, P/N 809000-275	5- 41
A2A4A13T2		TRANSFORMER, VARIABLE, RADIO FREQUENCY, 23 MC, 0.620 IN. LG X 0.422 IN. DIA, MFR 58189, P/N 809000-331	5- 41
A2A4A13T3		TRANSFORMER, VARIABLE, RADIO FREQUENCY, 18 MC, 0.620 IN. LG X 0.422 IN. DIA, MFR 58189, P/N 809000-297	5- 41
A2A4A13T4		TRANSFORMER, VARIABLE, RADIO FREQUENCY, 13 MC, 0.756 IN. LG X 0.535 IN. DIA, MFR 58189, P/N 809000-212	5- 41
A2A4A14		MEGACYCLE ASSEMBLY, PRINTED CIRCUIT BOARD W/ALL COMPONENTS ASSEMBLED FOR OPERATION, MFR 58189, P/N 666230-298	5- 35

TABLE 6-2. MAINTENANCE PARTS LIST (Continued)

RADIO RECEIVER R-1051/URR

REF DESIG	NOTES	NAME AND DESCRIPTION	FIG. NO.
A2A4A14C1		SAME AS A2A4A3C1	5- 35
A2A4A14C2		CAPACITOR, FIXED, MICA DIELECTRIC, 58 UUF PORM 1 PCT, 500 WVDC, MFR 72136, P/N DM15E580F500V	5- 35
A2A4A14C3		CAPACITOR, FIXED, MICA DIELECTRIC, 63 UUF PORM 1 PCT, 500 WVDC, MFR 72136, P/N DM15E630F500V	5- 35
A2A4A14C4		SAME AS A2A4A9C2	5- 35
A2A4A14C5		SAME AS A2A4A4C3	5- 35
A2A4A14T1		TRANSFORMER, VARIABLE, RADIO FREQUENCY, 24 MC, 0.620 IN. LG X 0.422 IN. DIA, MFR 58189, P/N 809000-276	5- 35
A2A4A14T2		TRANSFORMER, VARIABLE, RADIO FREQUENCY, 24 MC, 0.620 IN. LG X 0.422 IN. DIA, MFR 58189, P/N 809000-332	5- 35
A2A4A14T3		TRANSFORMER, VARIABLE, RADIO FREQUENCY, 19 MC, 0.620 IN. LG X 0.422 IN. DIA, MFR 58189, P/N 809000-298	5- 35
A2A4A14T4		TRANSFORMER, VARIABLE, RADIO FREQUENCY, 14 MC, 0.756 IN. LG X 0.535 IN. DIA, MFR 58189, P/N 809000-213	5- 35
A2A4A15		MEGACYCLE ASSEMBLY, PRINTED CIRCUIT BOARD W/ALL COMPONENTS ASSEMBLED FOR OPERATION, MFR 58189, P/N 666230-299	5- 40
A2A4A15C1		SAME AS A2A4A3C1	5- 40
A2A4A15C2		CAPACITOR, FIXED, MICA DIELECTRIC, 56 UUF PORM 1 PCT, 500 WVDC, MFR 72136, P/N DM15E560F500V	5- 40
A2A4A15C3		SAME AS A2A4A13C2	5- 40
A2A4A15C4		SAME AS A2A4A10C2	5- 40
A2A4A15C5		SAME AS A2A4A5C3	5- 40
A2A4A15T1		TRANSFORMER, VARIABLE, RADIO FREQUENCY, 25 MC, 0.620 IN. LG X 0.422 IN. DIA, MFR 58189, P/N 809000-277	5- 40
A2A4A15T2		TRANSFORMER, VARIABLE, RADIO FREQUENCY, 25 MC, 0.620 IN. LG X 0.422 IN. DIA, MFR 58189, P/N 809000-333	5- 40
A2A4A15T3		TRANSFORMER, VARIABLE, RADIO FREQUENCY, 20 MC, 0.620 IN. LG X 0.422 IN. DIA, MFR 58189, P/N 809000-299	5- 40
A2A4A15T4		TRANSFORMER, VARIABLE, RADIO FREQUENCY, 15 MC, 0.756 IN. LG X 0.535 IN. DIA, MFR 58189, P/N 809000-214	5- 40
A2A4A16		MEGACYCLE ASSEMBLY, PRINTED CIRCUIT BOARD W/ALL COMPONENTS ASSEMBLED FOR OPERATION, MFR 58189, P/N 666230-300	5- 40
A2A4A16C1		SAME AS A2A4A3C1	5- 40
A2A4A16C2		CAPACITOR, FIXED, MICA DIELECTRIC, 54 UUF PORM 1 PCT, 500 WVDC, MFR 72136, P/N DM15E540F500V	5- 40
A2A4A16C3		CAPACITOR, FIXED, MICA DIELECTRIC, 59 UUF PORM 1 PCT, 500 WVDC, MFR 72136, P/N DM15E590F500V	5- 40
A2A4A16C4		SAME AS A2A4A11C2	5- 40
A2A4A16C5		SAME AS A2A4A6C3	5- 40
A2A4A16T1		TRANSFORMER, VARIABLE, RADIO FREQUENCY, 26 MC, 0.620 IN. LG X 0.422 IN. DIA, MFR 58189, P/N 809000-278	5- 40
A2A4A16T2		TRANSFORMER, VARIABLE, RADIO FREQUENCY, 26 MC, 0.620 IN. LG X 0.422 IN. DIA, MFR 58189, P/N 809000-334	5- 40

TABLE 6-2. MAINTENANCE PARTS LIST (Continued)

RADIO RECEIVER R-1051/URR

REF DESIG	NOTES	NAME AND DESCRIPTION	FIG. NO.
A2A4A16T3		TRANSFORMER, VARIABLE, RADIO FREQUENCY, 21 MC, 0.620 IN. LG X 0.422 IN. DIA, MFR 58189, P/N 809000-300	5- 40
A2A4A16T4		TRANSFORMER, VARIABLE, RADIO FREQUENCY, 16 MC, 0.756 IN. LG X 0.535 IN. DIA, MFR 58189, P/N 809000-215	5- 40
A2A4A17		MEGACYCLE ASSEMBLY, PRINTED CIRCUIT BOARD W/ALL COMPONENTS ASSEMBLED FOR OPERATION, MFR 58189, P/N 666230-301	5- 42
A2A4A17C1		SAME AS A2A4A3C1	5- 42
A2A4A17C2		CAPACITOR, FIXED, MICA DIELECTRIC, 52 UUF PORM 1 PCT, 500 WVDC, MFR 72136, P/N DM15E520F500V	5- 42
A2A4A17C3		CAPACITOR, FIXED, MICA DIELECTRIC, 57 UUF PORM 1 PCT, 500 WVDC, MFR 72136, P/N DM15E570F500V	5- 42
A2A4A17C4		SAME AS A2A4A12C2	5- 42
A2A4A17C5		SAME AS A2A4A7C3	5- 42
A2A4A17T1		TRANSFORMER, VARIABLE, RADIO FREQUENCY, 27 MC, 0.620 IN. LG X 0.422 IN. DIA, MFR 58189, P/N 809000-279	5- 42
A2A4A17T2		TRANSFORMER, VARIABLE, RADIO FREQUENCY, 27 MC, 0.620 IN. LG X 0.422 IN. DIA, MFR 58189, P/N 809000-335	5- 42
A2A4A17T3		TRANSFORMER, VARIABLE, RADIO FREQUENCY, 22 MC, 0.620 IN. LG X 0.422 IN. DIA, MFR 58189, P/N 809000-301	5- 42
A2A4A17T4		TRANSFORMER, VARIABLE, RADIO FREQUENCY, 17 MC, 0.756 IN. LG X 0.535 IN. DIA, MFR 58189, P/N 809000-216	5- 42
A2A4A18		MEGACYCLE ASSEMBLY, PRINTED CIRCUIT BOARD W/ALL COMPONENTS ASSEMBLED FOR OPERATION, MFR 58189, P/N 666230-302	5- 43
A2A4A18C1		SAME AS A2A4A3C1	5- 43
A2A4A18C2		CAPACITOR, FIXED, MICA DIELECTRIC, 50 UUF PORM 1 PCT, 500 WVDC, MFR 72136, P/N DM15E500F500V	5- 43
A2A4A18C3		CAPACITOR, FIXED, MICA DIELECTRIC, 55 UUF PORM 1 PCT, 500 WVDC, MFR 72136, P/N DM15E550F500V	5- 43
A2A4A18C4		SAME AS A2A4A13C2	5- 43
A2A4A18C5		SAME AS A2A4A7C2	5- 43
A2A4A18T1		TRANSFORMER, VARIABLE, RADIO FREQUENCY, 28 MC, 0.620 IN. LG X 0.422 IN. DIA, MFR 58189, P/N 809000-280	5- 43
A2A4A18T2		TRANSFORMER, VARIABLE, RADIO FREQUENCY, 28 MC, 0.620 IN. LG X 0.422 IN. DIA, MFR 58189, P/N 809000-336	5- 43
A2A4A18T3		TRANSFORMER, VARIABLE, RADIO FREQUENCY, 23 MC, 0.620 IN. LG X 0.422 IN. DIA, MFR 58189, P/N 809000-302	5- 43
A2A4A18T4		TRANSFORMER, VARIABLE, RADIO FREQUENCY, 18 MC, 0.756 IN. LG X 0.535 IN. DIA, MFR 58189, P/N 809000-217	5- 43
A2A4A19		MEGACYCLE ASSEMBLY, PRINTED CIRCUIT BOARD W/ALL COMPONENTS ASSEMBLED FOR OPERATION, MFR 58189, P/N 666230-303	5- 44
A2A4A19C1		SAME AS A2A4A3C1	5- 44
A2A4A19C2		CAPACITOR, FIXED, MICA DIELECTRIC, 48 UUF PORM 1 PCT, 500 WVDC, MFR 72136, P/N DM15E480F500V	5- 44
A2A4A19C3		CAPACITOR, FIXED, MICA DIELECTRIC, 53 UUF PORM 1 PCT, 500 WVDC, MFR 72136, P/N DM15E530F500V	5- 44

TABLE 6-2. MAINTENANCE PARTS LIST (Continued)

RADIO RECEIVER R-1051/URR

REF DESIG	NOTES	NAME AND DESCRIPTION	FIG. NO.
A2A4A19C4		SAME AS A2A4A14C2	5- 44
A2A4A19C5		SAME AS A2A4A8C2	5- 44
A2A4A19T1		TRANSFORMER, VARIABLE, RADIO FREQUENCY, 29 MC, 0.620 IN. LG X 0.422 IN. DIA, MFR 58189, P/N 809000-281	5- 44
A2A4A19T2		TRANSFORMER, VARIABLE, RADIO FREQUENCY, 29 MC, 0.620 IN. LG X 0.422 IN. DIA, MFR 58189, P/N 809000-337	5- 44
A2A4A19T3		TRANSFORMER, VARIABLE, RADIO FREQUENCY, 24 MC, 0.620 IN. LG X 0.422 IN. DIA, MFR 58189, P/N 809000-309	5- 44
A2A4A19T4		TRANSFORMER, VARIABLE, RADIO FREQUENCY, 19 MC, 0.756 IN. LG X 0.535 IN. DIA, MFR 58189, P/N 809000-218	5- 44
A2A4A19Y1		CRYSTAL UNIT, QUARTZ, 28.500 MC, 0.418 IN. LG X 0.166 IN. W X 0.515 IN. H EXCLUDING LEADS, MFR 58189, P/N 666162-599	5- 44
A2A4A20		MEGACYCLE ASSEMBLY, PRINTED CIRCUIT BOARD W/ALL COMPONENTS ASSEMBLED FOR OPERATION, MFR 58189, P/N 666230-304	5- 45
A2A4A20C1		CAPACITOR, FIXED, CERAMIC DIELECTRIC, 9.1 UUF PORM 5 PCT, 500 WVDC, MFR 78488, P/N GA9R1J500V	5- 45
A2A4A20C2-C3		NOT USED	
A2A4A20C4		SAME AS A2A4A15C2	5- 45
A2A4A20C5		SAME AS A2A4A10C3	5- 45
A2A4A20T1		TRANSFORMER, VARIABLE, RADIO FREQUENCY, 2 MC, 0.620 IN. LG X 0.422 IN. DIA, MFR 58189, P/N 809000-254	5- 45
A2A4A20T2		TRANSFORMER, VARIABLE, RADIO FREQUENCY, 2 MC, 0.620 IN. LG X 0.422 IN. DIA, MFR 58189, P/N 809000-310	5- 45
A2A4A20T3		TRANSFORMER, VARIABLE, RADIO FREQUENCY, 25 MC, 0.620 IN. LG X 0.422 IN. DIA, MFR 58189, P/N 809000-303	5- 45
A2A4A20T4		TRANSFORMER, VARIABLE, RADIO FREQUENCY, 20 MC, 0.756 IN. LG X 0.535 IN. DIA, MFR 58189, P/N 809000-219	5- 45
A2A4A21		MEGACYCLE ASSEMBLY, PRINTED CIRCUIT BOARD W/ALL COMPONENTS ASSEMBLED FOR OPERATION, MFR 58189, P/N 666230-305	5- 46
A2A4A21C1		CAPACITOR, FIXED, CERAMIC DIELECTRIC, 6.2 UUF PORM 5 PCT, 500 WVDC, MFR 78488, P/N GA6R2J500V	5- 46
A2A4A21C2		CAPACITOR, FIXED, MICA DIELECTRIC, 1247 UUF PORM 1/2 PCT, 300 WVDC, MFR 72136, P/N DM20F1247D300V	5- 46
A2A4A21C3		SAME AS A2A4A3C5	5- 46
A2A4A21C4		SAME AS A2A4A16C2	5- 46
A2A4A21C5		SAME AS A2A4A11C3	5- 46
A2A4A21T1		TRANSFORMER, VARIABLE, RADIO FREQUENCY, 3 MC, 0.620 IN. LG X 0.422 IN. DIA, MFR 58189, P/N 809000-255	5- 46
A2A4A21T2		TRANSFORMER, VARIABLE, RADIO FREQUENCY, 3 MC, 0.620 IN. LG X 0.422 IN. DIA, MFR 58189, P/N 809000-311	5- 46
A2A4A21T3		TRANSFORMER, VARIABLE, RADIO FREQUENCY, 26 MC, 0.620 IN. LG X 0.422 IN. DIA, MFR 58189, P/N 809000-304	5- 46
A2A4A21T4		TRANSFORMER, VARIABLE, RADIO FREQUENCY, 21 MC, 0.756 IN. LG X 0.535 IN. DIA, MFR 58189, P/N 809000-220	5- 46
A2A4A22		MEGACYCLE ASSEMBLY, PRINTED CIRCUIT BOARD W/ALL COMPONENTS ASSEMBLED FOR OPERATION, MFR 58189, P/N 666230-306	5- 35

TABLE 6-2. MAINTENANCE PARTS LIST (Continued)

RADIO RECEIVER R-1051/URR

REF DESIG	NOTES	NAME AND DESCRIPTION	FIG. NO.
A2A4A22C1		CAPACITOR, FIXED, CERAMIC DIELECTRIC, 5.6 UUF PORM 5 PCT, 500 WVDC, MFR 78488, P/N GA5R6J500V	5- 35
A2A4A22C2		CAPACITOR, FIXED, MICA DIELECTRIC, 623 UUF PORM 1/2 PCT, 300 WVDC, MFR 72136, P/N DM15F6230D300V	5- 35
A2A4A22C3		SAME AS A2A4A4C5	5- 35
A2A4A22C4		SAME AS A2A4A17C2	5- 35
A2A4A22C5		SAME AS A2A4A12C3	5- 35
A2A4A22T1		TRANSFORMER, VARIABLE, RADIO FREQUENCY, 4 MC, 0.620 IN. LG X 0.422 IN. DIA, MFR 58189, P/N 809000-256	5- 35
A2A4A22T2		TRANSFORMER, VARIABLE, RADIO FREQUENCY, 4 MC, 0.620 IN. LG X 0.422 IN. DIA, MFR 58189, P/N 809000-312	5- 35
A2A4A22T3		TRANSFORMER, VARIABLE, RADIO FREQUENCY, 27 MC, 0.620 IN. LG X 0.422 IN. DIA, MFR 58189, P/N 809000-305	5- 35
A2A4A22T4		TRANSFORMER, VARIABLE, RADIO FREQUENCY, 22 MC, 0.756 IN. LG X 0.535 IN. DIA, MFR 58189, P/N 809000-221	5- 35
A2A4A23		MEGACYCLE ASSEMBLY, PRINTED CIRCUIT BOARD W/ALL COMPONENTS ASSEMBLED FOR OPERATION, MFR 58189, P/N 666230-307	5- 41
A2A4A23C1		CAPACITOR, FIXED, CERAMIC DIELECTRIC, 5.1 UUF PORM 5 PCT, 500 WVDC, MFR 78488, P/N GA5R1J500V	5- 41
A2A4A23C2		CAPACITOR, FIXED, MICA DIELECTRIC, 416 UUF PORM 1/2 PCT, 300 WVDC, MFR 72136, P/N DM15F4160D300V	5- 41
A2A4A23C3		SAME AS A2A4A5C5	5- 41
A2A4A23C4		SAME AS A2A4A18C2	5- 41
A2A4A23C5		SAME AS A2A4A13C3	5- 41
A2A4A23T1		TRANSFORMER, VARIABLE, RADIO FREQUENCY, 5 MC, 0.620 IN. LG X 0.422 IN. DIA, MFR 58189, P/N 809000-257	5- 41
A2A4A23T2		TRANSFORMER, VARIABLE, RADIO FREQUENCY, 5 MC, 0.620 IN. LG X 0.422 IN. DIA, MFR 58189, P/N 809000-313	5- 41
A2A4A23T3		TRANSFORMER, VARIABLE, RADIO FREQUENCY, 28 MC, 0.620 IN. LG X 0.422 IN. DIA, MFR 58189, P/N 809000-306	5- 41
A2A4A23T4		TRANSFORMER, VARIABLE, RADIO FREQUENCY, 23 MC, 0.756 IN. LG X 0.535 IN. DIA, MFR 58189, P/N 809000-222	5- 41
A2A4A24		MEGACYCLE ASSEMBLY, PRINTED CIRCUIT BOARD W/ALL COMPONENTS ASSEMBLED FOR OPERATION, MFR 58189, P/N 666230-308	5- 47
A2A4A24C1		CAPACITOR, FIXED, CERAMIC DIELECTRIC, 3.9 UUF PORM 5 PCT, 500 WVDC, MFR 78488, P/N GA3R9J500V	5- 47
A2A4A24C2		CAPACITOR, FIXED, MICA DIELECTRIC, 312 UUF PORM 1/2 PCT, 500 WVDC, MFR 72136, P/N DM15F3120D500V	5- 47
A2A4A24C3		SAME AS A2A4A6C5	5- 47
A2A4A24C4		SAME AS A2A4A19C2	5- 47
A2A4A24C5		SAME AS A2A4A14C3	5- 47
A2A4A24T1		TRANSFORMER, VARIABLE, RADIO FREQUENCY, 6 MC, 0.620 IN. LG X 0.422 IN. DIA, MFR 58189, P/N 809000-258	5- 47
A2A4A24T2		TRANSFORMER, VARIABLE, RADIO FREQUENCY, 6 MC, 0.620 IN. LG X 0.422 IN. DIA, MFR 58189, P/N 809000-314	5- 47

TABLE 6-2. MAINTENANCE PARTS LIST (Continued)

RADIO RECEIVER R-1051/URR

REF DESIG	NOTES	NAME AND DESCRIPTION	FIG. NO.
A2A4A24T3		TRANSFORMER, VARIABLE, RADIO FREQUENCY, 29 MC, 0.620 IN. LG X 0.422 IN. DIA, MFR 58189, P/N 809000-307	5- 47
A2A4A24T4		TRANSFORMER, VARIABLE, RADIO FREQUENCY, 24 MC, 0.756 IN. LG X 0.535 IN. DIA, MFR 58189, P/N 809000-223	5- 47
A2A4A25		MEGACYCLE ASSEMBLY, PRINTED CIRCUIT BOARD W/ALL COMPONENTS ASSEMBLED FOR OPERATION, MFR 58189, P/N 666230-309	5- 48
A2A4A25C1		CAPACITOR, FIXED, CERAMIC DIELECTRIC, 3.3 UUF PORM 5 PCT, 500 WVDC, MFR 78488, P/N GA3R3J500V	5- 48
A2A4A25C2		SAME AS A2A4A2C4	5- 48
A2A4A25C3		SAME AS A2A4A7C5	5- 48
A2A4A25C4		NOT USED	
A2A4A25C5		SAME AS A2A4A13C2	5- 48
A2A4A25T1		TRANSFORMER, VARIABLE, RADIO FREQUENCY, 7 MC, 0.620 IN. LG X 0.422 IN. DIA, MFR 58189, P/N 809000-259	5- 48
A2A4A25T2		TRANSFORMER, VARIABLE, RADIO FREQUENCY, 7 MC, 0.620 IN. LG X 0.422 IN. DIA, MFR 58189, P/N 809000-315	5- 48
A2A4A25T3		TRANSFORMER, VARIABLE, RADIO FREQUENCY, 2 MC, 0.620 IN. LG X 0.422 IN. DIA, MFR 58189, P/N 809000-282	5- 48
A2A4A25T4		TRANSFORMER, VARIABLE, RADIO FREQUENCY, 25 MC, 0.756 IN. LG X 0.535 IN. DIA, MFR 58189, P/N 809000-224	5- 48
A2A4A26		MEGACYCLE ASSEMBLY, PRINTED CIRCUIT BOARD W/ALL COMPONENTS ASSEMBLED FOR OPERATION, MFR 58189, P/N 666230-310	5- 49
A2A4A26C1		CAPACITOR, FIXED, CERAMIC DIELECTRIC, 3 UUF PORM 5 PCT, 500 WVDC, MFR 78488, P/N GA3R0J500V	5- 49
A2A4A26C2		SAME AS A2A4A3C4	5- 49
A2A4A26C3		SAME AS A2A4A8C5	5- 49
A2A4A26C4		SAME AS A2A4A21C2	5- 49
A2A4A26C5		SAME AS A2A4A16C3	5- 49
A2A4A26T1		TRANSFORMER, VARIABLE, RADIO FREQUENCY, 8 MC, 0.620 IN. LG X 0.422 IN. DIA, MFR 58189, P/N 809000-260	5- 49
A2A4A26T2		TRANSFORMER, VARIABLE, RADIO FREQUENCY, 8 MC, 0.620 IN. LG X 0.422 IN. DIA, MFR 58189, P/N 809000-316	5- 49
A2A4A26T3		TRANSFORMER, VARIABLE, RADIO FREQUENCY, 3 MC, 0.620 IN. LG X 0.422 IN. DIA, MFR 58189, P/N 809000-283	5- 49
A2A4A26T4		TRANSFORMER, VARIABLE, RADIO FREQUENCY, 26 MC, 0.756 IN. LG X 0.535 IN. DIA, MFR 58189, P/N 809000-225	5- 49
A2A4A27		MEGACYCLE ASSEMBLY, PRINTED CIRCUIT BOARD W/ALL COMPONENTS ASSEMBLED FOR OPERATION, MFR 58189, P/N 666230-311	5- 47
A2A4A27C1		CAPACITOR, FIXED, CERAMIC DIELECTRIC, 2.7 UUF PORM 5 PCT, 500 WVDC, MFR 78488, P/N GA2R7J500V	5- 47
A2A4A27C2		SAME AS A2A4A4C4	5- 47
A2A4A27C3		SAME AS A2A4A9C5	5- 47
A2A4A27C4		SAME AS A2A4A22C2	5- 47
A2A4A27C5		SAME AS A2A4A17C3	5- 47

TABLE 6-2. MAINTENANCE PARTS LIST (Continued)

RADIO RECEIVER R-1051/URR

REF DESIG	NOTES	NAME AND DESCRIPTION	FIG. NO.
A2A4A27T1		TRANSFORMER, VARIABLE, RADIO FREQUENCY, 9 MC, 0.620 IN. LG X 0.422 IN. DIA, MFR 58189, P/N 809000-261	5- 47
A2A4A27T2		TRANSFORMER, VARIABLE, RADIO FREQUENCY, 9 MC, 0.620 IN. LG X 0.422 IN. DIA, MFR 58189, P/N 809000-317	5- 47
A2A4A27T3		TRANSFORMER, VARIABLE, RADIO FREQUENCY, 4 MC, 0.620 IN. LG X 0.422 IN. DIA, MFR 58189, P/N 809000-284	5- 47
A2A4A27T4		TRANSFORMER, VARIABLE, RADIO FREQUENCY, 27 MC, 0.756 IN. LG X 0.535 IN. DIA, MFR 58189, P/N 809000-226	5- 47
A2A4A28		MEGACYCLE ASSEMBLY, PRINTED CIRCUIT BOARD W/ALL COMPONENTS ASSEMBLED FOR OPERATION, MFR 58189, P/N 666230-312	5- 47
A2A4A28C1		SAME AS A2A4A27C1	5- 47
A2A4A28C2		SAME AS A2A4A5C4	5- 47
A2A4A28C3		SAME AS A2A4A10C5	5- 47
A2A4A28C4		SAME AS A2A4A23C2	5- 47
A2A4A28C5		SAME AS A2A4A18C3	5- 47
A2A4A28T1		TRANSFORMER, VARIABLE, RADIO FREQUENCY, 10 MC, 0.620 IN. LG X 0.422 IN. DIA, MFR 58189, P/N 809000-262	5- 47
A2A4A28T2		TRANSFORMER, VARIABLE, RADIO FREQUENCY, 10 MC, 0.620 IN. LG X 0.422 IN. DIA, MFR 58189, P/N 809000-318	5- 47
A2A4A28T3		TRANSFORMER, VARIABLE, RADIO FREQUENCY, 5 MC, 0.620 IN. LG X 0.422 IN. DIA, MFR 58189, P/N 809000-285	5- 47
A2A4A28T4		TRANSFORMER, VARIABLE, RADIO FREQUENCY, 28 MC, 0.756 IN. LG X 0.535 IN. DIA, MFR 58189, P/N 809000-227	5- 47
A2A4A29		MEGACYCLE ASSEMBLY, PRINTED CIRCUIT BOARD W/ALL COMPONENTS ASSEMBLED FOR OPERATION, MFR 58189, P/N 666230-313	5- 36
A2A4A29C1		CAPACITOR, FIXED, CERAMIC DIELECTRIC, 2.4 UUF PORM 5 PCT, 500 WVDC, MFR 78488, P/N GA2R4J500V	5- 36
A2A4A29C2		SAME AS A2A4A6C4	5- 36
A2A4A29C3		SAME AS A2A4A11C5	5- 36
A2A4A29C4		SAME AS A2A4A24C2	5- 36
A2A4A29C5		SAME AS A2A4A19C3	5- 36
A2A4A29T1		TRANSFORMER, VARIABLE, RADIO FREQUENCY, 11 MC, 0.620 IN. LG X 0.422 IN. DIA, MFR 58189, P/N 809000-263	5- 36
A2A4A29T2		TRANSFORMER, VARIABLE, RADIO FREQUENCY, 11 MC, 0.620 IN. LG X 0.422 IN. DIA, MFR 58189, P/N 809000-319	5- 36
A2A4A29T3		TRANSFORMER, VARIABLE, RADIO FREQUENCY, 6 MC, 0.620 IN. LG X 0.422 IN. DIA, MFR 58189, P/N 809000-286	5- 36
A2A4A29T4		TRANSFORMER, VARIABLE, RADIO FREQUENCY, 29 MC, 0.756 IN. LG X 0.535 IN. DIA, MFR 58189, P/N 809000-228	5- 36
A2A4A30		ROTOR ASSEMBLY, PRINTED CIRCUIT BOARD W/ALL COMPONENTS ASSEMBLED FOR OPERATION, MFR 58189, P/N 666230-585	5- 55
A2A4A30C1		CAPACITOR, FIXED, MICA DIELECTRIC, 545 UUF PORM 1/2 PCT, 300 WVDC, MFR 72136, P/N DM15F5450D300V	5- 55
A2A4A30C2		CAPACITOR, FIXED, MICA DIELECTRIC, 426 UUF PORM 1/2 PCT, 300 WVDC, MFR 72136, P/N DM15F4260D300V	5- 55

TABLE 6-2. MAINTENANCE PARTS LIST (Continued)

RADIO RECEIVER R-1051/URR

REF DESIG	NOTES	NAME AND DESCRIPTION	FIG. NO.
A2A4A30C3		CAPACITOR, FIXED, MICA DIELECTRIC, 332 UUF PORM 1/2 PCT, 500 WVDC, MFR 72136, P/N DM15F332OD500V	5- 55
A2A4A30C4		CAPACITOR, FIXED, MICA DIELECTRIC, 257 UUF PORM 1/2 PCT, 500 WVDC, MFR 72136, P/N DM15F257OD500V	5- 55
A2A4A30C5		CAPACITOR, FIXED, MICA DIELECTRIC, 195 UUF PORM 1/2 PCT, 500 WVDC, MFR 72136, P/N DM15F195OD500V	5- 55
A2A4A30C6		CAPACITOR, FIXED, MICA DIELECTRIC, 143 UUF PORM 1/2 PCT, 500 WVDC, MFR 72136, P/N DM15F143OD500V	5- 55
A2A4A30C7		CAPACITOR, FIXED, MICA DIELECTRIC, 99 UUF PORM 1 PCT, 500 WVDC, MFR 72136, P/N DM15F990F500V	5- 55
A2A4A30C8		SAME AS A2A4A13C2	5- 55
A2A4A30C9		CAPACITOR, FIXED, MICA DIELECTRIC, 29 UUF PORM 1 PCT, 500 WVDC, MFR 72136, P/N DM15E290F500V	5- 55
A2A4A30C10		CAPACITOR, FIXED, MICA DIELECTRIC, 253 UUF PORM 1/2 PCT, 500 WVDC, MFR 72136, P/N DM15F253OD500V	5- 55
A2A4A30C11		CAPACITOR, FIXED, MICA DIELECTRIC, 219 UUF PORM 1/2 PCT, 500 WVDC, MFR 72136, P/N DM15F219OD500V	5- 55
A2A4A30C12		CAPACITOR, FIXED, MICA DIELECTRIC, 190 UUF PORM 1/2 PCT, 500 WVDC, MFR 72136, P/N DM15F191D500V	5- 55
A2A4A30C13		CAPACITOR, FIXED, MICA DIELECTRIC, 165 UUF PORM 1/2 PCT, 500 WVDC, MFR 72136, P/N DM15F165OD500V	5- 55
A2A4A30C14		CAPACITOR, FIXED, MICA DIELECTRIC, 144 UUF PORM 1/2 PCT, 500 WVDC, MFR 72136, P/N DM15F144OD500V	5- 55
A2A4A30C15		CAPACITOR, FIXED, MICA DIELECTRIC, 125 UUF PORM 1/2 PCT, 500 WVDC, MFR 72136, P/N DM15F125OD500V	5- 55
A2A4A30C16		CAPACITOR, FIXED, MICA DIELECTRIC, 109 UUF PORM 1/2 PCT, 500 WVDC, MFR 72136, P/N DM15F109OD500V	5- 55
A2A4A30C17		CAPACITOR, FIXED, MICA DIELECTRIC, 95 UUF PORM 1 PCT, 500 WVDC, MFR 72136, P/N DM15F950F500V	5- 55
A2A4A30C18		CAPACITOR, FIXED, MICA DIELECTRIC, 83 UUF PORM 1 PCT, 500 WVDC, MFR 72136, P/N DM15E830F500V	5- 55
A2A4A30C19		CAPACITOR, FIXED, MICA DIELECTRIC, 74 UUF PORM 1 PCT, 500 WVDC, MFR 72136, P/N DM15E740F500V	5- 55
A2A4A31		ROTOR ASSEMBLY, PRINTED CIRCUIT BOARD W/ALL COMPONENTS ASSEMBLED FOR OPERATION, MFR 58189, P/N 666230-588	5- 56
A2A4A31C1		SAME AS A2A4A2C4	5- 56
A2A4A31C2		CAPACITOR, FIXED, MICA DIELECTRIC, 215 UUF PORM 1/2 PCT, 500 WVDC, MFR 72136, P/N DM15F215OD500V	5- 56
A2A4A31C3		CAPACITOR, FIXED, MICA DIELECTRIC, 183 UUF PORM 1/2 PCT, 500 WVDC, MFR 72136, P/N DM15F183OD500V	5- 56
A2A4A31C4		CAPACITOR, FIXED, MICA DIELECTRIC, 153 UUF PORM 1/2 PCT, 500 WVDC, MFR 72136, P/N DM15F153OD500V	5- 56
A2A4A31C5		CAPACITOR, FIXED, MICA DIELECTRIC, 124 UUF PORM 1/2 PCT, 500 WVDC, MFR 72136, P/N DM15F124OD500V	5- 56
A2A4A31C6		SAME AS A2A4A6C3	5- 56
A2A4A31C7		CAPACITOR, FIXED, MICA DIELECTRIC, 70 UUF PORM 1 PCT, 500 WVDC, MFR 72136, P/N DM15E700F500V	5- 56

TABLE 6-2. MAINTENANCE PARTS LIST (Continued)

RADIO RECEIVER R-1051/URR

REF DESIG	NOTES	NAME AND DESCRIPTION	FIG. NO.
A2A4A31C8		CAPACITOR, FIXED, MICA DIELECTRIC, 45 UUF PORM 1 PCT, 500 WVDC, MFR 72136, P/N DM15E450F500V	5- 56
A2A4A31C9		CAPACITOR, FIXED, MICA DIELECTRIC, 22 UUF PORM 1 PCT, 500 WVDC, MFR 72136, P/N DM15C220F500V	5- 56
A2A4A32		ROTOR ASSEMBLY, PRINTED CIRCUIT BOARD W/ALL COMPONENTS ASSEMBLED FOR OPERATION, MFR 58189, P/N 666230-591	5- 56
A2A4A32C1		CAPACITOR, FIXED, MICA DIELECTRIC, 260 UUF PORM 1/2 PCT, 500 WVDC, MFR 72136, P/N DM15F261D500V	5- 56
A2A4A32C2		CAPACITOR, FIXED, MICA DIELECTRIC, 224 UUF PORM 1/2 PCT, 500 WVDC, MFR 72136, P/N DM15F224OD500V	5- 56
A2A4A32C3		SAME AS A2A4A30C12	5- 56
A2A4A32C4		CAPACITOR, FIXED, MICA DIELECTRIC, 158 UUF PORM 1/2 PCT, 500 WVDC, MFR 72136, P/N DM15F158OD500V	5- 56
A2A4A32C5		CAPACITOR, FIXED, MICA DIELECTRIC, 128 UUF PORM 1/2 PCT, 500 WVDC, MFR 72136, P/N DM15F128OD500V	5- 56
A2A4A32C6		SAME AS A2A4A30C7	5- 56
A2A4A32C7		CAPACITOR, FIXED, MICA DIELECTRIC, 72 UUF PORM 1 PCT, 500 WVDC, MFR 72136, P/N DM15E720F500V	5- 56
A2A4A32C8		CAPACITOR, FIXED, MICA DIELECTRIC, 47 UUF PORM 1 PCT, 500 WVDC, MFR 72136, P/N DM15E470F500V	5- 56
A2A4A32C9		CAPACITOR, FIXED, MICA DIELECTRIC, 23 UUF PORM 1 PCT, 500 WVDC, MFR 72136, P/N DM15C230F500V	5- 56
A2A4A33		ROTOR ASSEMBLY, PRINTED CIRCUIT BOARD W/ALL COMPONENTS ASSEMBLED FOR OPERATION, MFR 58189, P/N 666230-595	5- 57
A2A4A33C1		CAPACITOR, FIXED, MICA DIELECTRIC, 517 UUF PORM 1/2 PCT, 300 WVDC, MFR 72136, P/N DM15F517OD300V	5- 57
A2A4A33C2		CAPACITOR, FIXED, MICA DIELECTRIC, 405 UUF PORM 1/2 PCT, 300 WVDC, MFR 72136, P/N DM15F405OD300V	5- 57
A2A4A33C3		CAPACITOR, FIXED, MICA DIELECTRIC, 316 UUF PORM 1/2 PCT, 500 WVDC, MFR 72136, P/N DM15F316OD500V	5- 57
A2A4A33C4		CAPACITOR, FIXED, MICA DIELECTRIC, 245 UUF PORM 1/2 PCT, 500 WVDC, MFR 72136, P/N DM15F245OD500V	5- 57
A2A4A33C5		CAPACITOR, FIXED, MICA DIELECTRIC, 186 UUF PORM 1/2 PCT, 500 WVDC, MFR 72136, P/N DM15F186OD500V	5- 57
A2A4A33C6		CAPACITOR, FIXED, MICA DIELECTRIC, 137 UUF PORM 1/2 PCT, 500 WVDC, MFR 72136, P/N DM15F137OD500V	5- 57
A2A4A33C7		SAME AS A2A4A30C17	5- 57
A2A4A33C8		SAME AS A2A4A16C3	5- 57
A2A4A33C9		CAPACITOR, FIXED, MICA DIELECTRIC, 28 UUF PORM 1 PCT, 500 WVDC, MFR 72136, P/N DM15E280F500V	5- 57
A2A4A33C10		SAME AS A2A4A30C4	5- 57
A2A4A33C11		CAPACITOR, FIXED, MICA DIELECTRIC, 222 UUF PORM 1/2 PCT, 500 WVDC, MFR 72136, P/N DM15F222OD500V	5- 57
A2A4A33C12		CAPACITOR, FIXED, MICA DIELECTRIC, 193 UUF PORM 1/2 PCT, 500 WVDC, MFR 72136, P/N DM15F193OD500V	5- 57
A2A4A33C13		CAPACITOR, FIXED, MICA DIELECTRIC, 167 UUF PORM 1/2 PCT, 500 WVDC, MFR 72136, P/N DM15F167OD500V	5- 57

TABLE 6-2. MAINTENANCE PARTS LIST (Continued)

RADIO RECEIVER R-1051/URR

REF DESIG	NOTES	NAME AND DESCRIPTION	FIG. NO.
A2A4A33C14		SAME AS A2A4A11C5	5- 57
A2A4A33C15		CAPACITOR, FIXED, MICA DIELECTRIC, 127 UUF PORM 1/2 PCT, 500 WVDC, MFR 72136, P/N DM15F1270D500V	5- 57
A2A4A33C16		CAPACITOR, FIXED, MICA DIELECTRIC, 110 UUF PORM 1/2 PCT, 500 WVDC, MFR 72136, P/N DM15F111D500V	5- 57
A2A4A33C17		SAME AS A2A4A6C3	5- 57
A2A4A33C18		SAME AS A2A4A30C18	5- 57
A2A4A33C19		SAME AS A2A4A30C19	5- 57
A2A4A34		ROTOR ASSEMBLY, PRINTED CIRCUIT BOARD W/ALL COMPONENTS ASSEMBLED FOR OPERATION, MFR 58189, P/N 666230-599	5- 58
A2A4A34C1		SAME AS A2A4A33C1	5- 58
A2A4A34C2		SAME AS A2A4A33C2	5- 58
A2A4A34C3		SAME AS A2A4A33C3	5- 58
A2A4A34C4		SAME AS A2A4A33C4	5- 58
A2A4A34C5		SAME AS A2A4A33C5	5- 58
A2A4A34C6		SAME AS A2A4A33C6	5- 58
A2A4A34C7		SAME AS A2A4A30C17	5- 58
A2A4A34C8		SAME AS A2A4A16C3	5- 58
A2A4A34C9		SAME AS A2A4A33C9	5- 58
A2A4A34C10		SAME AS A2A4A30C4	5- 58
A2A4A34C11		SAME AS A2A4A33C11	5- 58
A2A4A34C12		SAME AS A2A4A33C12	5- 58
A2A4A34C13		SAME AS A2A4A33C13	5- 58
A2A4A34C14		SAME AS A2A4A11C5	5- 58
A2A4A34C15		SAME AS A2A4A33C15	5- 58
A2A4A34C16		SAME AS A2A4A33C16	5- 58
A2A4A34C17		SAME AS A2A4A6C3	5- 58
A2A4A34C18		SAME AS A2A4A30C18	5- 58
A2A4A34C19		SAME AS A2A4A30C19	5- 58
A2A4A35		ROTOR ASSEMBLY, PRINTED CIRCUIT BOARD W/ALL COMPONENTS ASSEMBLED FOR OPERATION, MFR 58189, P/N 666230-602	5- 56
A2A4A35C1		SAME AS A2A4A32C1	5- 56
A2A4A35C2		SAME AS A2A4A32C2	5- 56
A2A4A35C3		SAME AS A2A4A30C12	5- 56
A2A4A35C4		SAME AS A2A4A32C4	5- 56
A2A4A35C5		SAME AS A2A4A32C5	5- 56
A2A4A35C6		SAME AS A2A4A30C7	5- 56
A2A4A35C7		SAME AS A2A4A32C7	5- 56

TABLE 6-2. MAINTENANCE PARTS LIST (Continued)

RADIO RECEIVER R-1051/URR

REF DESIG	NOTES	NAME AND DESCRIPTION	FIG. NO.
A2A4A35C8		SAME AS A2A4A32C8	5- 56
A2A4A35C9		SAME AS A2A4A32C9	5- 56
A2A4A36		ROTOR ASSEMBLY, PRINTED CIRCUIT BOARD W/ALL COMPONENTS ASSEMBLED FOR OPERATION, MFR 58189, P/N 666230-605	5- 59
A2A4A36C1		SAME AS A2A4A32C1	5- 59
A2A4A36C2		SAME AS A2A4A32C2	5- 59
A2A4A36C3		SAME AS A2A4A30C12	5- 59
A2A4A36C4		SAME AS A2A4A32C4	5- 59
A2A4A36C5		SAME AS A2A4A32C5	5- 59
A2A4A36C6		SAME AS A2A4A30C7	5- 59
A2A4A36C7		SAME AS A2A4A32C7	5- 59
A2A4A36C8		SAME AS A2A4A32C8	5- 59
A2A4A36C9		SAME AS A2A4A32C9	5- 59
A2A4A37		ROTOR ASSEMBLY, PRINTED CIRCUIT BOARD W/ALL COMPONENTS ASSEMBLED FOR OPERATION, MFR 58189, P/N 666230-609	5- 60
A2A4A37C1		CAPACITOR, FIXED, MICA DIELECTRIC, 517 UUF PORM 1 PCT, 300 WVDC, MFR 72136, P/N DM15F5170F300V	5- 60
A2A4A37C2		SAME AS A2A4A33C2	5- 60
A2A4A37C3		SAME AS A2A4A33C3	5- 60
A2A4A37C4		SAME AS A2A4A33C4	5- 60
A2A4A37C5		SAME AS A2A4A33C5	5- 60
A2A4A37C6		SAME AS A2A4A33C6	5- 60
A2A4A37C7		SAME AS A2A4A30C17	5- 60
A2A4A37C8		SAME AS A2A4A16C3	5- 60
A2A4A37C9		SAME AS A2A4A33C9	5- 60
A2A4A37C10		SAME AS A2A4A30C4	5- 60
A2A4A37C11		SAME AS A2A4A33C11	5- 60
A2A4A37C12		SAME AS A2A4A33C12	5- 60
A2A4A37C13		SAME AS A2A4A33C13	5- 60
A2A4A37C14		SAME AS A2A4A11C5	5- 60
A2A4A37C15		SAME AS A2A4A33C15	5- 60
A2A4A37C16		SAME AS A2A4A33C16	5- 60
A2A4A37C17		SAME AS A2A4A6C3	5- 60
A2A4A37C18		SAME AS A2A4A30C18	5- 60
A2A4A37C19		SAME AS A2A4A30C19	5- 60
A2A4A38		MIXER, TRANSMITTER, PRINTED CIRCUIT BOARD W/ALL COMPONENTS ASSEMBLED FOR OPERATION, MFR 58189, P/N 666230-517	5- 54
A2A4A38C1-C4		SAME AS A2A4C1-C2	5- 54

TABLE 6-2. MAINTENANCE PARTS LIST (Continued)

RADIO RECEIVER R-1051/URR

REF DESIG	NOTES	NAME AND DESCRIPTION	FIG. NO.
A2A4A38C5		CAPACITOR, MIL TYPE CK06CW222K	5- 54
A2A4A38C6		SAME AS A2A4C1-C2	5- 54
A2A4A38K1		SAME AS A2A4K1	5- 54
A2A4A38L1		COIL, RADIO FREQUENCY, 240 UH, MFR 99800, P/N 1537-94	5- 54
A2A4A38Q1		TRANSISTOR, MIL TYPE 2N3127	5- 54
A2A4A38Q2		TRANSISTOR, MFR 80131, P/N 2N1142	5- 54
A2A4A38R1		SAME AS A2A4R2	5- 54
A2A4A38R2		RESISTOR, MIL TYPE RC07GF682J	5- 54
A2A4A38R3		RESISTOR, MIL TYPE RC07GF133J	5- 54
A2A4A38R4		NOT USED	
A2A4A38R5		SAME AS A2A4A38R2	5- 54
A2A4A38R6		RESISTOR, MIL TYPE RC07GF471J	5- 54
A2A4A38R7		RESISTOR, MIL TYPE RC07GF123J	5- 54
A2A4A38R8		SAME AS A2A4A38R2	5- 54
A2A4A38R9		RESISTOR, MIL TYPE RC07GF182J	5- 54
A2A4A38R10		RESISTOR, MIL TYPE RC07GF472J	5- 54
A2A4A38TP1-TP2		JACK, TIP, MFR 74970, P/N 105-751	5- 54
A2A4A38TP3		JACK, TIP, MFR 74970, P/N 105-753	5- 54
A2A4A38XQ1		NOT USED	
A2A4A38XQ2		MOUNTING PAD, TRANSISTOR, 0.344 IN. DIA X 0.075 IN. THK, MFR 07047, P/N 10012	5- 54
A2A5		MODULE ASSEMBLY, FREQUENCY STANDARD, MFR 58189, P/N 809000-200	5- 61
A2A5C1		CAPACITOR, VARIABLE, GLASS DIELECTRIC, 1.0 TO 28.0 UUF, 1000 WVDC, MFR 73899, P/N VCJ711B	5- 61
A2A5HR1		OVEN HOUSING ASSEMBLY, MFR 58189, P/N 666163-058	5- 61
A2A5MP1		COVER ASSEMBLY, MFR 58189, P/N 666163-085	5- 61
A2A5MP2-MP3		SCREW, EXTERNALLY RELIEVED BODY, MFR 58189, P/N 666163-233	5- 61
A2A5MP4-MP9		CONNECTOR, PLUG, ELECTRICAL, MFR 91146, P/N DM53741-5012	5- 61
A2A5P1		CONNECTOR, RECEPTACLE, ELECTRICAL, 2.729 IN. LG X 0.494 IN. W X 0.660 IN. H, MFR 91146, P/N DCM13W6PC31F115	5- 61
A2A5Q1		TRANSISTOR, MFR 80131, P/N 2N1117A	5- 61
A2A5R1 SELECTED		RESISTOR, FIXED, WIREWOUND, 240 OHMS, PORM 1 PCT, 1/2W MFR 91637, P/N RS1-2 241F	5- 61
A2A5R1 SELECTED		RESISTOR, FIXED, WIREWOUND, 255 OHMS, PORM 1 PCT, 1/2W, MFR 91637, P/N RS1-2 2550F	5- 61
A2A5R1 SELECTED		RESISTOR, FIXED, WIREWOUND, 270 OHMS PORM 1 PCT, 1/2W, MFR 91637, P/N RS1-2 271F	5- 61

TABLE 6-2. MAINTENANCE PARTS LIST (Continued)

RADIO RECEIVER R-1051/URR

REF DESIG	NOTES	NAME AND DESCRIPTION	FIG. NO.
A2A5R1 SELECTED		RESISTOR, FIXED, WIREWOUND, 285 OHMS PORM 1 PCT, 1/2W, MFR 91637, P/N RS1-2 2850F	5- 61
A2A5R1 SELECTED		RESISTOR, FIXED, WIREWOUND, 300 OHMS PORM 1 PCT, 1/2W, MFR 91637, P/N RS1-2 301F	5- 61
A2A5R1 SELECTED		RESISTOR, FIXED, WIREWOUND, 315 OHMS PORM 1 PCT, 1/2W, MFR 91637, P/N RS1-2 3150F	5- 61
A2A5R1 SELECTED		RESISTOR, FIXED, WIREWOUND, 330 OHMS, PORM 1 PCT, 1/2W MFR 91637, P/N RS1-2 331F	5- 61
A2A5R1 SELECTED		RESISTOR, FIXED, WIREWOUND, 345 OHMS, PORM 1 PCT, 1/2W MFR 91637, P/N RS1-2 3450F	5- 61
A2A5R1 SELECTED		RESISTOR, FIXED, WIREWOUND, 360 OHMS, PORM 1 PCT, 1/2W MFR 91637, P/N RS1-2 361F	5- 61
A2A5S1		SWITCH, ROTARY, 1 SECTION, 3 POLES, 3 POSITIONS, NON-SHORTING CONTACTS, MFR 58189, P/N 666163-057	5- 61
A2A5A1		MULTIPLIER AND DIVIDER ASSEMBLY, 5 MC, PRINTED CIRCUIT BOARD W/ALL COMPONENTS ASSEMBLED FOR OPERATION, MFR 58189, P/N 666231-010	5- 62
A2A5A1C1		CAPACITOR, FIXED, CERAMIC DIELECTRIC, 0.005 UF PORM 20 PCT, 75 WVDC, MFR 86335, P/N SSM005-35	5- 62
A2A5A1C2-C3		CAPACITOR, FIXED, METALIZED PAPER DIELECTRIC, 0.1 UF PORM 20 PCT, 50 WVDC, MFR 02777, P/N T2901	5- 62
A2A5A1C4		SAME AS A2A5A1C1	5- 62
A2A5A1C5		CAPACITOR, FIXED, MICA DIELECTRIC, 681 UUF PORM 1 PCT, 300 WVDC, MFR 72136, P/N DM15F6810F300V	5- 62
A2A5A1C6		CAPACITOR, FIXED, MICA DIELECTRIC, 330 UUF PORM 2 PCT, 300 WVDC, MFR 72136, P/N DM15E331G300V	5- 62
A2A5A1C7		CAPACITOR, FIXED, CERAMIC DIELECTRIC, 47 UUF PORM 5 PCT, 75 WVDC, MFR 86335, P/N MINU47J	5- 62
A2A5A1C8		CAPACITOR, FIXED, CERAMIC DIELECTRIC, 0.01 UF, PORM 20 PCT, 75 WVDC, MFR 86335, P/N SSM01-88	5- 62
A2A5A1C9		CAPACITOR, FIXED, CERAMIC DIELECTRIC, 0.01 UF PLUS 100 PCT MINUS 20 PCT, 75 WVDC, MFR 86335, P/N K4000N.01Z	5- 62
A2A5A1C10		CAPACITOR, FIXED, METALIZED PAPER DIELECTRIC, 0.007 UF PORM 20 PCT, 200 WVDC, MFR 02777, P/N T2900-6	5- 62
A2A5A1C11		CAPACITOR, FIXED, MICA DIELECTRIC, 510 UUF PORM 2 PCT, 300 WVDC, MFR 72136, P/N DM15E511G300V	5- 62
A2A5A1C12		CAPACITOR, FIXED, CERAMIC DIELECTRIC, 100 UUF PORM 5 PCT, 75 WVDC, MFR 86335, P/N MINU100J	5- 62
A2A5A1C13		SAME AS A2A5A1C9	5- 62
A2A5A1C14		SAME AS A2A5A1C2-C3	5- 62
A2A5A1C15		SAME AS A2A5A1C9	5- 62
A2A5A1C16		CAPACITOR, FIXED, MICA DIELECTRIC, 220 UUF PORM 2 PCT, 300 WVDC, MFR 72136, P/N DM15E221G300V	5- 62
A2A5A1C17-C19		SAME AS A2A5A1C9	5- 62
A2A5A1C20-C22		SAME AS A2A5A1C8	5- 62
A2A5A1C23		CAPACITOR, FIXED, MICA DIELECTRIC, 160 UUF PORM 2 PCT, 300 WVDC, MFR 72136, P/N DM15E161G300V	5- 62

TABLE 6-2. MAINTENANCE PARTS LIST (Continued)

RADIO RECEIVER R-1051/URR

REF DESIG	NOTES	NAME AND DESCRIPTION	FIG. NO.
A2A5A1C24		SAME AS A2A5A1C9	5- 62
A2A5A1C25		CAPACITOR, FIXED, CERAMIC DIELECTRIC, 0.001 UF PORM 20 PCT, 75 WVDC, MFR 86335, P/N K1200M.001M	5- 62
A2A5A1C26		SAME AS A2A5A1C8	5- 62
A2A5A1CR1-CR2		SEMICONDUCTOR DEVICE, DIODE, MFR 80131, P/N 1N3063	5- 62
A2A5A1DS1		LAMP, INCANDESCENT, 10V, MFR 58854, P/N 10ES	5- 62
A2A5A1L1		COIL, RADIO FREQUENCY, 23 MC, MFR 82142, P/N 4422-11K	5- 62
A2A5A1L2		COIL, RADIO FREQUENCY, 1,500 UF, MFR 99800, P/N 1537-746	5- 62
A2A5A1Q1-Q3		TRANSISTOR, MIL TYPE 2N1225	5- 62
A2A5A1Q4-Q5		TRANSISTOR, MFR 80131, P/N 2N1225	5- 62
A2A5A1Q6		TRANSISTOR, MFR 80131, P/N 2N332	5- 62
A2A5A1Q7		SAME AS A2A5A1Q4-Q5	5- 62
A2A5A1R1		RESISTOR, MIL TYPE RC07GF102J	5- 62
A2A5A1R2		RESISTOR, MIL TYPE RC07GF222J	5- 62
A2A5A1R3		RESISTOR, MIL TYPE RC07GF101J	5- 62
A2A5A1R4		RESISTOR, MIL TYPE RC07GF221J	5- 62
A2A5A1R5		RESISTOR, MIL TYPE RC07GF331J	5- 62
A2A5A1R6		RESISTOR, MIL TYPE RC07GF561J	5- 62
A2A5A1R7		SAME AS A2A5A1R2	5- 62
A2A5A1R8		RESISTOR, MIL TYPE RC07GF472J	5- 62
A2A5A1R9		RESISTOR, MIL TYPE RC07GF393J	5- 62
A2A5A1R10		RESISTOR, MIL TYPE RC07GF122J	5- 62
A2A5A1R11		SAME AS A2A5A1R2	5- 62
A2A5A1R12		SAME AS A2A5A1R1	5- 62
A2A5A1R13		RESISTOR, MIL TYPE RC07GF563J	5- 62
A2A5A1R14		RESISTOR, MIL TYPE RC07GF243J	5- 62
A2A5A1R15-R16		RESISTOR, MIL TYPE RC07GF103J	5- 62
A2A5A1R17		SAME AS A2A5A1R3	5- 62
A2A5A1R18		RESISTOR, MIL TYPE RC07GF470J	5- 62
A2A5A1R19		RESISTOR, MIL TYPE RC07GF153J	5- 62
A2A5A1R20		RESISTOR, MIL TYPE RC07GF152J	5- 62
A2A5A1R21		SAME AS A2A5A1R2	5- 62
A2A5A1R22		RESISTOR, VARIABLE, 500 OHMS PORM 5 PCT, 1W, MFR 80294, P/N 3250W1-501	5- 62
A2A5A1R23		SAME AS A2A5A1R18	5- 62
A2A5A1R24		RESISTOR, MIL TYPE RC07GF512J	5- 62
A2A5A1R25		RESISTOR, MIL TYPE RC07GF821J	5- 62

TABLE 6-2. MAINTENANCE PARTS LIST (Continued)

RADIO RECEIVER R-1051/URR

REF DESIG	NOTES	NAME AND DESCRIPTION	FIG. NO.
A2A5A1R26		RESISTOR, MIL TYPE RC07GF202J	5- 62
A2A5A1R27		SAME AS A2A5A1R6	5- 62
A2A5A1R28		SAME AS A2A5A1R4	5- 62
A2A5A1R29-R30		SAME AS A2A5A1R2	5- 62
A2A5A1R31		SAME AS A2A5A1R1	5- 62
A2A5A1T1		TRANSFORMER, RADIO FREQUENCY, 0.500 MC, 0.620 IN. LG X 0.422 IN. DIA, MFR 58189, P/N 809000-398	5- 62
A2A5A1T2		TRANSFORMER, RADIO FREQUENCY, 4 MC, 0.620 IN. LG X 0.422 IN. DIA, MFR 58189, P/N 809000-397	5- 62
A2A5A1T3		TRANSFORMER, RADIO FREQUENCY, 1 MC, 0.620 IN. LG X 0.422 IN. DIA, MFR 58189, P/N 809000-396	5- 62
A2A5A1T4		TRANSFORMER, RADIO FREQUENCY, 10 MC, 0.620 IN. LG X 0.422 IN. DIA, MFR 58189, P/N 809000-395	5- 62
A2A5A1T5		TRANSFORMER, RADIO FREQUENCY, 2 MC, 0.620 IN. LG X 0.422 IN. DIA, MFR 58189, P/N 809000-394	5- 62
A2A5A1T6		TRANSFORMER, RADIO FREQUENCY, 5 MC, 0.620 IN. LG X 0.422 IN. DIA, MFR 58189, P/N 809000-393	5- 62
A2A5A1TP1-TP2		JACK, TIP, MFR 98291, P/N SKT103PCWHITE	5- 62
A2A5A1XQ1-XQ5		MOUNTING PAD, TRANSISTOR, 0.344 IN. DIA X 0.075 IN. THK, MFR 07047, P/N 10027	5- 62
A2A5A1XQ6		MOUNTING PAD, TRANSISTOR, 0.344 IN. DIA X 0.075 IN. THK, MFR 07047, P/N 10012	5- 62
A2A5A1XQ7		SAME AS A2A5A1XQ1-XQ5	5- 62
A2A5A2		OVEN CONTROL CIRCUIT, PRINTED CIRCUIT BOARD W/ALL COMPONENTS ASSEMBLED FOR OPERATION, MFR 58189, P/N 666231-936	5- 63
A2A5A2C1		CAPACITOR, FIXED, ELECTROLYTIC, 3.3 UF PORM 20 PCT, 15 WVDC, MFR 56289, P/N 150D335X0015A2	5- 63
A2A5A2C2		CAPACITOR, FIXED, METALIZED PAPER DIELECTRIC, 0.01 UF PORM 20 PCT, 200 WVDC, MFR 02777, P/N T2900-2	5- 63
A2A5A2C3-C4		SAME AS A2A5A2C1	5- 63
A2A5A2C5-C6		CAPACITOR, FIXED, ELECTROLYTIC, 1 UF PORM 10 PCT, 35 WVDC, MFR 56289, P/N 150D105X9035A2	5- 63
A2A5A2C7-C11		NOT USED	
A2A5A2C12-C13		SAME AS A2A5A1C8	5- 63
A2A5A2C14-C39		NOT USED	
A2A5A2C40		SAME AS A2A5A1C8	5- 63
A2A5A2CR1		SEMICONDUCTOR DEVICE, DIODE, MFR 80131, P/N 1N9698	5- 63
A2A5A2CR2		SEMICONDUCTOR DEVICE, DIODE, MIL TYPE 1N270	5- 63
A2A5A2CR3-CR4		SEMICONDUCTOR DEVICE, DIODE, MFR 80131, P/N 1N755A	5- 63
A2A5A2Q1-Q2		TRANSISTOR, MFR 80131, P/N 2N338	5- 63
A2A5A2Q3		TRANSISTOR, MFR 80131, P/N 2N333	5- 63
A2A5A2Q4-Q5		NOT USED	

TABLE 6-2. MAINTENANCE PARTS LIST (Continued)

RADIO RECEIVER R-1051/URR

REF DESIG	NOTES	NAME AND DESCRIPTION	FIG. NO.
A2A5A2Q6		SAME AS A2A5A1Q4-Q5	5- 63
A2A5A2R1-R2		RESISTOR, MIL TYPE RC07GF562J	5- 63
A2A5A2R3		RESISTOR, MIL TYPE RC07GF121J	5- 63
A2A5A2R4		RESISTOR, MIL TYPE RC07GF392J	5- 63
A2A5A2R5		NOT USED	
A2A5A2R6		SAME AS A2A5A2R4	5- 63
A2A5A2R7		RESISTOR, MIL TYPE RC07GF430J	5- 63
A2A5A2R8		SAME AS A2A5A1R19	5- 63
A2A5A2R9		RESISTOR, MIL TYPE RC07GF272J	5- 63
A2A5A2R10		SAME AS A2A5A2R1-R2	5- 63
A2A5A2R11		SAME AS A2A5A1R1	5- 63
A2A5A2R12		SAME AS A2A5A1R20	5- 63
A2A5A2R13-R16		NOT USED	
A2A5A2R17		SAME AS A2A5A1R8	5- 63
A2A5A2R18		RESISTOR, MIL TYPE RC07GF270J	5- 63
A2A5A2RT1		NOT USED	
A2A5A2RT2		RESISTOR, THERMAL, MFR 04239, P/N 2D404	5- 63
A2A5A2T1		TRANSFORMER, AUDIO FREQUENCY, MFR 82068, P/N S71057	5- 63
A2A5A2T2		NOT USED	
A2A5A2T3		TRANSFORMER, RADIO FREQUENCY, 2 MC, 0.620 IN. LG X 0.422 IN. DIA, MFR 58189, P/N 809000-399	5- 63
A2A5A2XQ1-XQ3		SAME AS A2A5A1XQ6	5- 63
A2A5A2XQ4-XQ5		NOT USED	
A2A5A2XQ6		SAME AS A2A5A1XQ1-XQ5	5- 63
A2A5A3		OSCILLATOR SUBASSEMBLY, COMPONENT BOARD W/ALL COMPONENTS ASSEMBLED FOR OPERATION, MFR 58189, P/N 666163-081	5- 64
A2A5A3C1-C6		NOT USED	
A2A5A3C7		CAPACITOR, FIXED, CERAMIC DIELECTRIC, 68 UUF PORM 5 PCT, 75 WVDC, MFR 86335, P/N GTC75R68J	5- 64
A2A5A3C8		CAPACITOR, MIL TYPE CK06CW472M	5- 64
A2A5A3C9		SAME AS A2A5A1C1	5- 64
A2A5A3C10 SELECTED		CAPACITOR, FIXED, MICA DIELECTRIC, 33 UUF PORM 2 PCT, 300 WVDC, MFR 72136, P/N DM15E330G300V	5- 64
A2A5A3C10 SELECTED		CAPACITOR, FIXED, MICA DIELECTRIC, 47 UUF PORM 2 PCT, 300 WVDC, MFR 72136, P/N DM15E470G300V	5- 64
A2A5A3C10 SELECTED		CAPACITOR, FIXED, MICA DIELECTRIC, 56 UUF PORM 2 PCT, 300 WVDC, MFR 72136, P/N DM15E560G300V	5- 64
A2A5A3C10 SELECTED		CAPACITOR, FIXED, MICA DIELECTRIC, 62 UUF PORM 2 PCT, 300 WVDC, MFR 72136, P/N DM15E620G000V	5- 64

TABLE 6-2. MAINTENANCE PARTS LIST (Continued)

RADIO RECEIVER R-1051/URR

REF DESIG	NOTES	NAME AND DESCRIPTION	FIG. NO.
A2A5A3C10 SELECTED		CAPACITOR, FIXED, MICA DIELECTRIC, 68 UUF PORM 2 PCT, 300 WVDC, MFR 72136, P/N DM15E680G000V	5- 64
A2A5A3C10 SELECTED		CAPACITOR, FIXED, MICA DIELECTRIC, 75 UUF PORM 2 PCT, 300 WVDC, MFR 72136, P/N DM15E750G300V	5- 64
A2A5A3C10 SELECTED		CAPACITOR, FIXED, MICA DIELECTRIC, 82 UUF PORM 2 PCT, 300 WVDC, MFR 72136, P/N DM15E820G300V	5- 64
A2A5A3CR1-CR4		NOT USED	
A2A5A3CR5-CR6		SAME AS A2A5A1CR1-CR2	5- 64
A2A5A3Q1-Q4		NOT USED	
A2A5A3Q5		SAME AS A2A5A1Q4-Q5	5- 64
A2A5A3R1-R13		NOT USED	
A2A5A3R14		RESISTOR, MIL TYPE RC07GF271J	5- 64
A2A5A3R15		RESISTOR, MIL TYPE RC20GF220J	5- 64
A2A5A3R16		SAME AS A2A5A2R4	5- 64
A2A5A3T1		NOT USED	
A2A5A3T2		TRANSFORMER, VARIABLE, RADIO FREQUENCY, 0.620 IN. LG X 0.422 IN. DIA, MFR 58189, P/N 809000-392	5- 64
A2A5A3XQ1-XQ4		NOT USED	
A2A5A3XQ5		SAME AS A2A5A1XQ1-XQ5	5- 64
A2A5A3Y1		CRYSTAL UNIT, QUARTZ, 5 MC, MFR 58189, P/N 666163-049	5- 64
A2A6	A, B	TRANSLATOR-SYNTHESIZER SUBASSEMBLY, MFR 58189, P/N 666230-027	5- 65
A2A6	C	TRANSLATOR-SYNTHESIZER SUBASSEMBLY, MFR 58189, P/N A09496-001	5- 65
A2A6C1-C2		CAPACITOR, MIL TYPE CS13BB470K	5- 65
A2A6J1-J3		NOT USED	
A2A6J4		CONNECTOR, RECEPTACLE, ELECTRICAL, 2.088 IN. LG X 0.494 IN. W X 0.664 IN. H, MFR 91146, P/N DBMF17W2S2C31	5- 65
A2A6J5		CONNECTOR, RECEPTACLE, ELECTRICAL, 2.088 IN. LG X 0.494 IN. W X 0.663 IN. H, MFR 91146, P/N DBMF13W3S2C31	5- 65
A2A6J6		CONNECTOR, RECEPTACLE, ELECTRICAL, MFR 91146, P/N DBMF9W4S2C31	5- 65
A2A6MP1		JACK, TIP, MFR 98291, P/N SKT14GREEN	5- 65
A2A6MP2		JACK, TIP, MFR 98291, P/N SKT14ORANGE	5- 65
A2A6MP3-MP5		JACK, TIP, MFR 98291, P/N SKT14RED	5- 65
A2A6MP6		JACK, TIP, MFR 98291, P/N SKT14GRAY	5- 65
A2A6MP7-MP9		CONNECTOR, PLUG, ELECTRICAL, MFR 91146, P/N DM53741-5012	5- 65
A2A6MP10-MP18		CONNECTOR, RECEPTACLE, ELECTRICAL, MFR 91146, P/N DM53743-5014	5- 65
A2A6MP19		CONNECTOR, PLUG, ELECTRICAL, MFR 91146, P/N DM53741-5000	5- 65
A2A6MP20-MP29		CONNECTOR, PLUG, ELECTRICAL, MFR 98291, P/N 5754	5- 65
A2A6MP30		CONNECTOR, PLUG, ELECTRICAL, MFR 98291, P/N 51-043-4300	5- 65
A2A6MP31-MP32		CONNECTOR, PLUG, ELECTRICAL, MFR 98291, P/N 51-028-0029	5- 65

TABLE 6-2. MAINTENANCE PARTS LIST (Continued)

RADIO RECEIVER R-1051/URR

REF DESIG	NOTES	NAME AND DESCRIPTION	FIG. NO.
A2A6P1		CONNECTOR, RECEPTACLE, ELECTRICAL, 2.729 IN. LG X 0.494 IN. W X 0.660 IN. H, MFR 91146, P/N DCM25W3PC31	5- 65
A2A6P2-P3		CONNECTOR, RECEPTACLE, ELECTRICAL, 1.541 IN. LG X 0.494 IN. W X 0.656 IN. H, MFR 91146, P/N DAM3W3PC31	5- 65
A2A6A1		SYNTHESIZER ASSEMBLY, 1 MC, MFR 58189, P/N 666230-767	5- 66
A2A6A1B1		MOTOR, DIRECT CURRENT, 0.5 AMPS, 26 VDC, 3.494 IN. LG X 0.838 IN. W X 0.867 IN. H, MFR 25140, P/N 128A100	5- 66
A2A6A1C1		CAPACITOR, FIXED, CERAMIC DIELECTRIC, 0.01 UF, PORM 20 PCT, 75 WVDC, MFR 86335, P/N SSM01-88	5- 66
A2A6A1C2		CAPACITOR, FIXED, ELECTROLYTIC, 6.8 UF PORM 20 PCT, 35 WVDC, MFR 56289, P/N 150D685X0035B2	5- 66
A2A6A1K1		RELAY, ARMATURE, 3 AMPS AT 28VDC, 1.320 IN. LG X 0.375 IN. W X 1.085 IN. H, MFR 02289, P/N 2F2426	5- 69
A2A6A1L1-L2		COIL, RADIO FREQUENCY, 1000 UH, MFR 99800, P/N 1537-744	5- 66
A2A6A1MP1		SWITCH, ROTARY, 1 SECTION, 1 POLE, 18 POSITIONS, POSITIVE SHORTING CONTACTS, MFR 76854, P/N 806285-010	5- 66
A2A6A1MP2		GEAR SET, BEVEL, MATCHED, MFR 58189, P/N 666230-138	5- 66
A2A6A1MP3		PILOT BEARING, MOTOR SHAFT, MFR 58189, P/N 666231-887	5- 69
A2A6A1MP4		SAME AS A2A6MP19	5- 69
A2A6A1MP5		CONNECTOR, PLUG, ELECTRICAL, MFR 91146, P/N DM53740-5008	5- 69
A2A6A1P1		CONNECTOR, RECEPTACLE, ELECTRICAL, 2.088 IN. LG X 0.494 IN. W X 0.422 IN. H, MFR 91146, P/N DBM17W2PC31	5- 69
A2A6A1A1		SWITCH ASSEMBLY, SYNTHESIZER, MFR 58189, P/N 666231-126	5- 66
A2A6A1A1		OSCILLATOR, PRINTED CIRCUIT BOARD, W/ALL COMPONENTS ASSEMBLED FOR OPERATION, MFR 58189, P/N 666230-158	5- 66
A2A6A1A1C1		CAPACITOR, FIXED, MICA DIELECTRIC, 1300 UUF PORM 2 PCT, 500 WVDC, MFR 72136, P/N DM19F132G500V	5- 69
A2A6A1A1C2		CAPACITOR, FIXED, MICA DIELECTRIC, 1000 UUF PORM 2 PCT, 500 WVDC, MFR 72136, P/N DM19F102G500V	5- 69
A2A6A1A1C3		CAPACITOR, FIXED, MICA DIELECTRIC, 820 UUF PORM 2 PCT, 300 WVDC, MFR 72136, P/N DM15E821G300V	5- 66
A2A6A1A1C4		CAPACITOR, FIXED, MICA DIELECTRIC, 680 UUF PORM 2 PCT, 300 WVDC, MFR 72136, P/N DM15E681G300V	5- 66
A2A6A1A1C5		CAPACITOR, FIXED, MICA DIELECTRIC, 501 UUF PORM 1 PCT, 300 WVDC, MFR 72136, P/N DM15F5010F300V	5- 69
A2A6A1A1C6		CAPACITOR, FIXED, MICA DIELECTRIC, 430 UUF PORM 2 PCT, 300 WVDC, MFR 72136, P/N DM15E431G300V	5- 69
A2A6A1A1C7		CAPACITOR, FIXED, MICA DIELECTRIC, 360 UUF PORM 2 PCT, 300 WVDC, MFR 72136, P/N DM15E361G300V	5- 69
A2A6A1A1C8		CAPACITOR, FIXED, MICA DIELECTRIC, 300 UUF PORM 2 PCT, 300 WVDC, MFR 72136, P/N DM15E301G300V	5- 69
A2A6A1A1C9		CAPACITOR, FIXED, MICA DIELECTRIC, 270 UUF PORM 2 PCT, 300 WVDC, MFR 72136, P/N DM15E271G300V	5- 69
A2A6A1A1C10		CAPACITOR, FIXED, MICA DIELECTRIC, 240 UUF PORM 2 PCT, 300 WVDC, MFR 72136, P/N DM15E241G300V	5- 66

TABLE 6-2. MAINTENANCE PARTS LIST (Continued)

RADIO RECEIVER R-1051/URR

REF DESIG	NOTES	NAME AND DESCRIPTION	FIG. NO.
A2A6A1A1C11		CAPACITOR, FIXED, MICA DIELECTRIC, 200 UUF PORM 2 PCT, 300 WVDC, MFR 72136, P/N DM15E201G300V	5- 66
A2A6A1A1C12		CAPACITOR, FIXED, MICA DIELECTRIC, 180 UUF PORM 2 PCT, 300 WVDC, MFR 72136, P/N DM15E181G300V	5- 66
A2A6A1A1C13-C14		CAPACITOR, FIXED, MICA DIELECTRIC, 160 UUF PORM 2 PCT, 300 WVDC, MFR 72136, P/N DM15E161G300V	5- 66
A2A6A1A1C15		CAPACITOR, FIXED, MICA DIELECTRIC, 115 UUF PORM 1 PCT, 500 WVDC, MFR 72136, P/N DM15F115OF500V	5- 66
A2A6A1A1C16		CAPACITOR, FIXED, MICA DIELECTRIC, 110 UUF PORM 2 PCT, 300 WVDC, MFR 72136, P/N DM15E111G300V	5- 66
A2A6A1A1C17		CAPACITOR, FIXED, MICA DIELECTRIC, 75 UUF PORM 2 PCT, 300 WVDC, MFR 72136, P/N DM15E750G300V	5- 66
A2A6A1A1C18-C20		CAPACITOR, FIXED, CERAMIC DIELECTRIC, 0.01 UF GMV, 100 WVDC, MFR 96095, P/N C80R01GMV	5- 67
A2A6A1A1C21		CAPACITOR, FIXED, CERAMIC DIELECTRIC, 82 UUF PORM 2 PCT, 500 WVDC, MFR 15450, P/N 301N5600-82G	5- 67
A2A6A1A1C22		SAME AS A2A6J1-J3	5- 67
A2A6A1A1C23		SAME AS A2A6A1A1C18-C20	5- 67
A2A6A1A1C24		CAPACITOR, FIXED, CERAMIC DIELECTRIC, 430 UUF PORM 2 PCT, 500 WVDC, MFR 15450, P/N 301N5600-430G	5- 67
A2A6A1A1C25-C28		SAME AS A2A6A1A1C18-C20	5- 67
A2A6A1A1CR1-CR2		SEMICONDUCTOR DEVICE, DIODE, MFR 80131, P/N 1N3063	5- 67
A2A6A1A1CR3		CAPACITOR, FIXED, SILICON, 56 UUF, 30 WVDC, MFR 73293, P/N HC7060B	5- 67
A2A6A1A1L1		SAME AS A2A6A1L1-L2	5- 67
A2A6A1A1L2-L3		COIL, RADIO FREQUENCY, MFR 99800, P/N 1537-724	5- 67
A2A6A1A1MP1-MP2		SWITCH, ROTARY, 1 SECTION, 1 POLE, 18 POSITIONS, NON-SHORTING CONTACTS, MFR 76854, P/N 806274-001	5- 69
A2A6A1A1Q1-Q4		TRANSISTOR, MFR 80131, P/N 2N2708	5- 67
A2A6A1A1R1		RESISTOR, MIL TYPE RC07GF224J	5- 67
A2A6A1A1R2		RESISTOR, MIL TYPE RC07GF474J	5- 67
A2A6A1A1R3		RESISTOR, MIL TYPE RC07GF133J	5- 67
A2A6A1A1R4		RESISTOR, MIL TYPE RC07GF201J	5- 67
A2A6A1A1R5		SAME AS A2A6A1A1R3	5- 67
A2A6A1A1R6		RESISTOR, MIL TYPE RC07GF391J	5- 67
A2A6A1A1R7		RESISTOR, MIL TYPE RC07GF472J	5- 67
A2A6A1A1R8		RESISTOR, MIL TYPE RC07GF153J	5- 67
A2A6A1A1R9		RESISTOR, MIL TYPE RC07GF100J	5- 67
A2A6A1A1R10		RESISTOR, MIL TYPE RC07GF182J	5- 67
A2A6A1A1R11		RESISTOR, MIL TYPE RC07GF183J	5- 67
A2A6A1A1R12		RESISTOR, MIL TYPE RC07GF911J	5- 67
A2A6A1A1R13		RESISTOR, MIL TYPE RC07GF103J	5- 67

TABLE 6-2. MAINTENANCE PARTS LIST (Continued)

RADIO RECEIVER R-1051/URR

REF DESIG	NOTES	NAME AND DESCRIPTION	FIG. NO.
A2A6A1A1R14		RESISTOR, MIL TYPE RC07GF621J	5- 67
A2A6A1A1R15		RESISTOR, MIL TYPE RC07GF222J	5- 67
A2A6A1A1R16		SAME AS A2A6A1A1R10	5- 67
A2A6A1A1R17		RESISTOR, MIL TYPE RC07GF221J	5- 67
A2A6A1A1R18		RESISTOR, MIL TYPE RC07GF470J	5- 67
A2A6A1A1RT1		RESISTOR, THERMAL, 248 OHMS PORM 10 PCT, MFR 75263, P/N RL2012-248-73S3	5- 67
A2A6A1A1Y1		CRYSTAL UNIT, QUARTZ, 2499.850 KC, MFR 58189, P/N 810000-393	5- 69
A2A6A1A1Y2		CRYSTAL UNIT, QUARTZ, 3499.720 KC, MFR 58189, P/N 810000-394	5- 69
A2A6A1A1Y3		CRYSTAL UNIT, QUARTZ, 4499.640 KC, MFR 58189, P/N 810000-395	5- 66
A2A6A1A1Y4		CRYSTAL UNIT, QUARTZ, 5499.560 KC, MFR 58189, P/N 810000-396	5- 66
A2A6A1A1Y5		CRYSTAL UNIT, QUARTZ, 7499.400 KC, MFR 58189, P/N 810000-397	5- 69
A2A6A1A1Y6		CRYSTAL UNIT, QUARTZ, 8499.320 KC, MFR 58189, P/N 810000-398	5- 69
A2A6A1A1Y7		CRYSTAL UNIT, QUARTZ, 9499.240 KC, MFR 58189, P/N 810000-399	5- 69
A2A6A1A1Y8		CRYSTAL UNIT, QUARTZ, 10499.160 KC, MFR 58189, P/N 810000-400	5- 69
A2A6A1A1Y9		CRYSTAL UNIT, QUARTZ, 11499.080 KC, MFR 58189, P/N 810000-401	5- 69
A2A6A1A1Y10		CRYSTAL UNIT, QUARTZ, 12499.000 KC, MFR 58189, P/N 810000-402	5- 69
A2A6A1A1Y11		CRYSTAL UNIT, QUARTZ, 14498.840 KC, MFR 58189, P/N 810000-403	5- 66
A2A6A1A1Y12		CRYSTAL UNIT, QUARTZ, 15498.760 KC, MFR 58189, P/N 810000-404	5- 66
A2A6A1A1Y13		CRYSTAL UNIT, QUARTZ, 16498.680 KC, MFR 58189, P/N 810000-405	5- 66
A2A6A1A1Y14		CRYSTAL UNIT, QUARTZ, 17498.600 KC, MFR 58189, P/N 810000-406	5- 66
A2A6A1A1Y15		CRYSTAL UNIT, QUARTZ, 19498.440 KC, MFR 58189, P/N 810000-407	5- 66
A2A6A1A1Y16		CRYSTAL UNIT, QUARTZ, 20498.360 KC, MFR 58189, P/N 810000-408	5- 66
A2A6A1A1Y17		CRYSTAL UNIT, QUARTZ, 23498.120 KC, MFR 58189, P/N 810000-409	5- 66
A2A6A1A2		AMPLIFIER ASSEMBLY, IF/DC, PRINTED CIRCUIT BOARD W/ALL COMPONENTS ASSEMBLED FOR OPERATION, MFR 58189, P/N 666230-148	5- 68
A2A6A1A2C1-C2		SAME AS A2A6A1C1	5- 68
A2A6A1A2C3		CAPACITOR, FIXED, MICA DIELECTRIC, 620 UUF PORM 2 PCT, 300 WVDC, MFR 72136, P/N DM15E621G300V	5- 68
A2A6A1A2C4-C5		SAME AS A2A6A1C1	5- 68
A2A6A1A2C6		SAME AS A2A6A1A2C3	5- 68
A2A6A1A2C7		CAPACITOR, FIXED, MICA DIELECTRIC, 1000 UUF PORM 2 PCT, 500 WVDC, MFR 72136, DM20E102G500V	5- 68
A2A6A1A2C8		SAME AS A2A6A1A2C3	5- 68
A2A6A1A2C9		SAME AS A2A6A1C1	5- 68
A2A6A1A2C10		CAPACITOR, FIXED, METALIZED PAPER DIELECTRIC, 0.1 UF PORM 20 PCT, 200 WVDC, MFR 02777, P/N T2900-4	5- 68
A2A6A1A2C11-C12		SAME AS A2A6A1C1	5- 68
A2A6A1A2C13		CAPACITOR, FIXED, CERAMIC DIELECTRIC, 0.005 UF PORM 20 PCT, 75 WVDC, MFR 86335, P/N SSM005-35	5- 68

TABLE 6-2. MAINTENANCE PARTS LIST (Continued)

RADIO RECEIVER R-1051/URR

REF DESIG	NOTES	NAME AND DESCRIPTION	FIG. NO.
A2A6A1A2C14		SAME AS A2A6A1C1	5- 68
A2A6A1A2CR1		SEMICONDUCTOR DEVICE, DIODE, MIL TYPE 1N270	5- 68
A2A6A1A2J1-J2		CONNECTOR, RECEPTACLE, ELECTRICAL, MFR 06776, P/N NS430-20	5- 68
A2A6A1A2L1		COIL, RADIO FREQUENCY, 39 UH, MFR 99800, P/N 1537-727	5- 68
A2A6A1A2L2		COIL, RADIO FREQUENCY, 68 UH, MFR 99800, P/N 1537-730	5- 68
A2A6A1A2L3		COIL, RADIO FREQUENCY, 27 UH, MFR 99800, P/N 1537-725	5- 68
A2A6A1A2L4		REACTOR, 11 TO 18 UH, MFR 03550, P/N 64215-22	5- 68
A2A6A1A2P1		NOT USED	
A2A6A1A2P2		PIN, MINATURE, MFR 06776, P/N CP19	5- 68
A2A6A1A2Q1-Q2		TRANSISTOR, MFR 80131, P/N 2N1225	5- 68
A2A6A1A2Q3		TRANSISTOR, MFR 80131, P/N 2N2222	5- 68
A2A6A1A2R1		SAME AS A2A6A1A1R8	5- 68
A2A6A1A2R2		SAME AS A2A6A1A1R13	5- 68
A2A6A1A2R3		SAME AS A2A6A1A1R7	5- 68
A2A6A1A2R4		RESISTOR, MIL TYPE RC07GF101J	5- 68
A2A6A1A2R5		RESISTOR, MIL TYPE RC07GF223J	5- 68
A2A6A1A2R6		RESISTOR, VARIABLE, 200 OHMS PORM 5 PCT, 1W, MFR 80294, P/N 3250W1-201	5- 68
A2A6A1A2R7		SAME AS A2A6A1A1R13	5- 68
A2A6A1A2R8		SAME AS A2A6A1A1R8	5- 68
A2A6A1A2R9		RESISTOR, MIL TYPE RC07GF392J	5- 68
A2A6A1A2R10		SAME AS A2A6A1A2R4	5- 68
A2A6A1A2R11		SAME AS A2A6A1A2R5	5- 68
A2A6A1A2R12		SAME AS A2A6A1A1R15	5- 68
A2A6A1A2R13		RESISTOR, MIL TYPE RC07GF271J	5- 68
A2A6A1A2R14		RESISTOR, MIL TYPE RC07GF511J	5- 68
A2A6A1A2R15-R16		SAME AS A2A6A1A1R3	5- 68
A2A6A1A2R17		SAME AS A2A6A1A1R11	5- 68
A2A6A1A2R18		RESISTOR, MIL TYPE RC07GF131J	5- 68
A2A6A1A2R19		SAME AS A2A6A1A1R6	5- 68
A2A6A1A2R20		RESISTOR, MIL TYPE RC07GF750J	5- 68
A2A6A1A2R21		SAME AS A2A6A1A1R2	5- 68
A2A6A1A2R22		SAME AS A2A6A1A2R4	5- 68
A2A6A1A2RT1		SAME AS A2A6A1A1RT1	5- 68
A2A6A1A2T1		TRANSFORMER, VARIABLE, RADIO FREQUENCY, 1.5 MC, 0.620 IN. LG X 0.422 IN. DIA, MFR 58189, P/N 809000-238	5- 68
A2A6A1A2T2		TRANSFORMER, VARIABLE, RADIO FREQUENCY, 1.5 MC, 0.620 IN. LG X 0.422 IN. DIA, MFR 58189, P/N 809000-239	5- 68

TABLE 6-2. MAINTENANCE PARTS LIST (Continued)

RADIO RECEIVER R-1051/URR

REF DESIG	NOTES	NAME AND DESCRIPTION	FIG. NO.
A2A6A1A2TP1-TP2		TERMINAL, FEED THRU, INSULATED, MFR 98291, P/N FTMM16L2RED	5- 68
A2A6A1A2TP3		JACK, TIP, MFR 74970, P/N 105-760	5- 68
A2A6A1A2XQ1-XQ2		MOUNTING PAD, TRANSISTOR, 0.344 IN. DIA X 0.075 IN. THK, MFR 07047, P/N 10027	5- 68
A2A6A1A3		GENERATOR AND MIXER ASSEMBLY, SPECTRUM, PRINTED CIRCUIT BOARD W/ALL COMPONENTS ASSEMBLED FOR OPERATION, MFR 58189, P/N 666230-152	5- 70
A2A6A1A3C1-C2		SAME AS A2A6A1C1	5- 70
A2A6A1A3C3		SAME AS A2A6A1A1C16	5- 70
A2A6A1A3C4		SAME AS A2A6A1C1	5- 70
A2A6A1A3C5		SAME AS A2A6A1A1C16	5- 70
A2A6A1A3C6		SAME AS A2A6A1A1C4	5- 70
A2A6A1A3C7		SAME AS A2A6A1C1	5- 70
A2A6A1A3C8		CAPACITOR, FIXED, MICA DIELECTRIC, 10 UUF PORM 5 PCT, 500 WVDC, MFR 72136, P/N DM15C100J500V	5- 70
A2A6A1A3C9		SAME AS A2A6A1C1	5- 70
A2A6A1A3C10		SAME AS A2A6A1A2C10	5- 70
A2A6A1A3C11-C12		SAME AS A2A6A1C1	5- 70
A2A6A1A3C13-C14		SAME AS A2A6A1A2C10	5- 70
A2A6A1A3C15		CAPACITOR, FIXED, MICA DIELECTRIC, 10 UUF PORM 5 PCT, 300 WVDC, MFR 72136, P/N DM15C100J300V	5- 70
A2A6A1A3C16-C17		SAME AS A2A6A1A1C8	5- 70
A2A6A1A3C18-C20		SAME AS A2A6A1C1	5- 70
A2A6A1A3CR1		SEMICONDUCTOR DEVICE, DIODE, MFR 80131, P/N 1N758A	5- 70
A2A6A1A3CR2-CR4		SAME AS A2A6A1A2CR1	5- 70
A2A6A1A3CR5		SEMICODNCUTOR DEVICE, DIODE, MFR 80131, P/N 1N3600	5- 70
A2A6A1A3L1		SAME AS A2A6A1L1-L2	5- 70
A2A6A1A3L2		COIL, RADIO FREQUENCY, 790 KC, 0.620 IN. LG X 0.422 IN. DIA, MFR 58189, P/N 809000-417	5- 70
A2A6A1A3L3		REACTOR, 0.38 TO 0.56 UH, MFR 03550, P/N 64047-22	5- 70
A2A6A1A3L4		COIL, RADIO FREQUENCY, 2.5 MC, 0.620 IN. LG X 0.422 IN. DIA, MFR 58189, P/N 809000-420	5- 70
A2A6A1A3Q1		TRANSISTOR, MFR 80131, P/N 2N964A	5- 70
A2A6A1A3Q2		TRANSISTOR, MFR 80131, P/N 2N2501	5- 70
A2A6A1A3Q3		SAME AS A2A6A1A3Q1	5- 70
A2A6A1A3Q4-Q5		TRANSISTOR, MIL TYPE 2N3127	5- 70
A2A6A1A3Q6		SAME AS A2A6A1A1Q1-Q4	5- 70
A2A6A1A3R1		RESISTOR, MIL TYPE RC20GF511J	5- 70
A2A6A1A3R2		RESISTOR, MIL TYPE RC07GF683J	5- 70
A2A6A1A3R3		RESISTOR, MIL TYPE RC07GF102J	5- 70

TABLE 6-2. MAINTENANCE PARTS LIST (Continued)

RADIO RECEIVER R-1051/URR

REF DESIG	NOTES	NAME AND DESCRIPTION	FIG. NO.
A2A6A1A3R4		RESISTOR, MIL TYPE RC07GF622J	5- 70
A2A6A1A3R5		SAME AS A2A6A1A1R13	5- 70
A2A6A1A3R6		RESISTOR, MIL TYPE RC07GF822J	5- 70
A2A6A1A3R7		RESISTOR, MIL TYPE RC07GF473J	5- 70
A2A6A1A3R8		SAME AS A2A6A1A2R4	5- 70
A2A6A1A3R9		RESISTOR, MIL TYPE RC07GF152J	5- 70
A2A6A1A3R10		RESISTOR, MIL TYPE RC07GF681J	5- 70
A2A6A1A3R11		SAME AS A2A6A1A3R4	5- 70
A2A6A1A3R12		SAME AS A2A6A1A3R2	5- 70
A2A6A1A3R13		SAME AS A2A6A1A2R14	5- 70
A2A6A1A3R14		RESISTOR, MIL TYPE RC07GF333J	5- 70
A2A6A1A3R15		RESISTOR, MIL TYPE RC07GF390J	5- 70
A2A6A1A3R16		SAME AS A2A6A1A3R10	5- 70
A2A6A1A3R17		SAME AS A2A6A1A2R4	5- 70
A2A6A1A3R18		SAME AS A2A6A1A1R8	5- 70
A2A6A1A3R19		SAME AS A2A6A1A1R7	5- 70
A2A6A1A3R20		RESISTOR, MIL TYPE RC07GF300J	5- 70
A2A6A1A3R21		SAME AS A2A6A1A1R13	5- 70
A2A6A1A3R22		SAME AS A2A6A1A1R18	5- 70
A2A6A1A3R23-R24		SAME AS A2A6A1A1R8	5- 70
A2A6A1A3R25		SAME AS A2A6A1A1R15	5- 70
A2A6A1A3R26		SAME AS A2A6A1A1R7	5- 70
A2A6A1A3R27		SAME AS A2A6A1A1R8	5- 70
A2A6A1A3R28		SAME AS A2A6A1A1R13	5- 70
A2A6A1A3R29		RESISTOR, MIL TYPE RC07GF151J	5- 70
A2A6A1A3R30		SAME AS A2A6A1A3R3	5- 70
A2A6A1A3R31		SAME AS A2A6A1A2R4	5- 70
A2A6A1A3R32		SAME AS A2A6A1A1R8	5- 70
A2A6A1A3R33		SAME AS A2A6A1A1R18	5- 70
A2A6A1A3T1		TRANSFORMER, RADIO FREQUENCY, 2.5 MC, 0.620 IN. LG X 0.422 IN. DIA, MFR 58189, P/N 809000-418	5- 70
A2A6A1A3TP1		SAME AS A2A6A1A2TP1-TP2	5- 70
A2A6A2		SYNTHESIZER ASSEMBLY, 100 KC, MFR 58189, P/N 666230-626	5- 71
A2A6A2MP1-MP4		SAME AS A2A6A1MP5	5- 71
A2A6A2MP5		DETENT, SWITCH, 10 POSITIONS EVERY 36 DEGREES, MFR 58189, P/N 666230-439	5- 73
A2A6A2MP6		COUPLING ASSEMBLY, MFR 58189, P/N 666162-106	5- 73

TABLE 6-2. MAINTENANCE PARTS LIST (Continued)

RADIO RECEIVER R-1051/URR

REF DESIG	NOTES	NAME AND DESCRIPTION	FIG. NO.
A2A6A2P1		CONNECTOR, RECEPTACLE, ELECTRICAL, 2.088 IN. LG X 0.494 IN. W X 0.663 IN. H, MFR 91146, P/N DBM9W4PC31	5- 71
A2A6A2S1		SWITCH SECTION, ROTARY, MFR 58189, P/N 666163-515	5- 73
A2A6A2Y1		CRYSTAL UNIT, QUARTZ, 4.553 MF, MFR 58189, P/N 666163-670	5- 73
A2A6A2Y2		CRYSTAL UNIT, QUARTZ, 4.653 MC, MFR 58189, P/N 666163-671	5- 73
A2A6A2Y3		CRYSTAL UNIT, QUARTZ, 4.753 MC, MFR 58189, P/N 666163-672	5- 73
A2A6A2Y4		CRYSTAL UNIT, QUARTZ, 4.853 MC, MFR 58189, P/N 666163-673	5- 73
A2A6A2Y5		CRYSTAL UNIT, QUARTZ, 4.953 MC, MFR 58189, P/N 666163-674	5- 73
A2A6A2Y6		CRYSTAL UNIT, QUARTZ, 5.053 MC, MFR 58189, P/N 666163-675	5- 73
A2A6A2Y7		CRYSTAL UNIT, QUARTZ, 5.153 MC, MFR 58189, P/N 666163-676	5- 73
A2A6A2Y8		CRYSTAL UNIT, QUARTZ, 5.253 MC, MFR 58189, P/N 666163-677	5- 73
A2A6A2Y9		CRYSTAL UNIT, QUARTZ, 5.353 MC, MFR 58189, P/N 666163-678	5- 73
A2A6A2Y10		CRYSTAL UNIT, QUARTZ, 5.453 MC, MFR 58189, P/N 666163-679	5- 73
A2A6A2A1		OSCILLATOR ASSEMBLY, 4.553 TO 5.453 MC, PRINTED CIRCUIT BOARD W/ALL COMPONENTS ASSEMBLED FOR OPERATION, MFR 58189, P/N 666230-859	5- 74
A2A6A2A1C1		CAPACITOR, FIXED, MICA DIELECTRIC, 36 UUF PORM 2 PCT, 300 WVDC, MFR 72136, P/N DM15E360G300V	5- 74
A2A6A2A1C2-C3		SAME AS A2A6A1C1	5- 74
A2A6A2A1C4		SAME AS A2A6A1A1C9	5- 74
A2A6A2A1C5		SAME AS A2A6A1A1C3	5- 74
A2A6A2A1C6		SAME AS A2A6A1A1C7	5- 74
A2A6A2A1C7-C9		SAME AS A2A6A1C1	5- 74
A2A6A2A1C10		SAME AS A2A6A1A1C3	5- 74
A2A6A2A1CR1-CR2		SAME AS A2A6A1A1CR1-CR2	5- 74
A2A6A2A1Q1-Q2		SAME AS A2A6A1A2Q3	5- 74
A2A6A2A1R1		SAME AS A2A6A1A1R6	5- 74
A2A6A2A1R2-R3		SAME AS A2A6A1A1R3	5- 74
A2A6A2A1R4		SAME AS A2A6A1A1R4	5- 74
A2A6A2A1R5		SAME AS A2A6A1A1R8	5- 74
A2A6A2A1R6		SAME AS A2A6A1A3R3	5- 74
A2A6A2A1R7		SAME AS A2A6A1A1R8	5- 74
A2A6A2A1R8		RESISTOR, MIL TYPE RC07GF150J	5- 74
A2A6A2A1R9-R10		SAME AS A2A6A1A1R8	5- 74
A2A6A2A1R11		SAME AS A2A6A1A3R3	5- 74
A2A6A2A1R12		SAME AS A2A6A1A2R4	5- 74
A2A6A2A1R13		RESISTOR, MIL TYPE RC07GF561J	5- 74
A2A6A2A1R14		RESISTOR, MIL TYPE RC07GF431J	5- 74

TABLE 6-2. MAINTENANCE PARTS LIST (Continued)

RADIO RECEIVER R-1051/URR

REF DESIG	NOTES	NAME AND DESCRIPTION	FIG. NO.
A2A6A2A1RT1		SAME AS A2A6A1A1RT1	5- 74
A2A6A2A2		MIXER, 10.747 MC, PRINTED CIRCUIT BOARD W/ALL COMPONENTS ASSEMBLED FOR OPERATION, MFR 58189, P/N 666230-864	5- 78
A2A6A2A2C1-C4		SAME AS A2A6A1C1	5- 78
A2A6A2A2C5		CAPACITOR, FIXED, CERAMIC DIELECTRIC, 47 UUF PORM 5 PCT, 75 WVDC, MFR 86335, P/N MINC47J	5- 78
A2A6A2A2C6-C7		SAME AS A2A6A1C1	5- 78
A2A6A2A2C8-C9		CAPACITOR, FIXED, MICA DIELECTRIC, 750 UUF PORM 2 PCT, 300 WVDC, MFR 72136, P/N DM15E751G300V	5- 78
A2A6A2A2FL1		FILTER, BAND PASS, 10.747 MC, MFR 88463, P/N 7911007	5- 78
A2A6A2A2Q1-Q2		SAME AS A2A6A1A3Q4-Q5	5- 78
A2A6A2A2R1		SAME AS A2A6A1A1R3	5- 78
A2A6A2A2R2		RESISTOR, MIL TYPE RC07GF562J	5- 78
A2A6A2A2R3		SAME AS A2A6A1A2R4	5- 78
A2A6A2A2R4		SAME AS A2A6A1A1R13	5- 78
A2A6A2A2R5		SAME AS A2A6A1A1R8	5- 78
A2A6A2A2R6		SAME AS A2A6A1A2R4	5- 78
A2A6A2A2R7		SAME AS A2A6A1A1R13	5- 78
A2A6A2A2R8		RESISTOR, MIL TYPE RC07GF512J	5- 78
A2A6A2A2R9		SAME AS A2A6A1A1R15	5- 78
A2A6A2A2T1		TRANSFORMER, VARIABLE, RADIO FREQUENCY, 2.5 MC, 0.620 IN. LG X 0.422 IN. DIA, MFR 58189, P/N 809000-245	5- 78
A2A6A2A2T2		TRANSFORMER, VARIABLE, RADIO FREQUENCY, 10.747 MC, 0.620 IN. LG X 0.422 IN. DIA, MFR 58189, P/N 809000-242	5- 78
A2A6A2A2T3		TRANSFORMER, RADIO FREQUENCY, 25 MC, 0.620 IN. LG X 0.422 IN. DIA, MFR 58189, P/N 809000-385	5- 78
A2A6A2A2TP1		SAME AS A2A6A1A2TP1-TP2	5- 78
A2A6A2A3		MIXER, VARIABLE, 17.847 TO 27.847 MC, PRINTED CIRCUIT BOARD W/ALL COMPONENTS ASSEMBLED FOR OPERATION, MFR 58189, P/N 666230-869	5- 72
A2A6A2A3C1		SAME AS A2A6A1C1	5- 72
A2A6A2A3C2-C3		CAPACITOR, FIXED, ELECTROLYTIC, 6.8 UF PORM 20 PCT, 35 WVDC, MFR 56289, P/N 180D685X0035RS	5- 72
A2A6A2A3C4-C6		SAME AS A2A6A1C1	5- 72
A2A6A2A3C7		CAPACITOR, FIXED, MICA DIELECTRIC, 56 UUF PORM 2 PCT, 300 WVDC, MFR 72136, P/N DM15E560G300V	5- 72
A2A6A2A3C8		CAPACITOR, MIL TYPE PC41J4R5	5- 72
A2A6A2A3C9		SAME AS A2A6A1A3C15	5- 72
A2A6A2A3C10-C11		SAME AS A2A6A1C1	5- 72
A2A6A2A3C12		SAME AS A2A6A1A1C3	5- 72
A2A6A2A3C13-C17		SAME AS A2A6A1C1	5- 72

TABLE 6-2. MAINTENANCE PARTS LIST (Continued)

RADIO RECEIVER R-1051/URR

REF DESIG	NOTES	NAME AND DESCRIPTION	FIG. NO.
A2A6A2A3C18		CAPACITOR, FIXED, MICA DIELECTRIC, 43 UUF PORM 2 PCT, 300 WVDC, MFR 72136, P/N DM15E430G300V	5- 72
A2A6A2A3C19		SAME AS A2A6A2A3C8	5- 72
A2A6A2A3C20		SAME AS A2A6A1A3C15	5- 72
A2A6A2A3CR1		SAME AS A2A6A1A2CR1	5- 72
A2A6A2A3CR2		SAME AS A2A6A1A3CR1	5- 72
A2A6A2A3CR3		SAME AS A2A6A1A2CR1	5- 72
A2A6A2A3Q1-Q2		SAME AS A2A6A1A3Q4-Q5	5- 72
A2A6A2A3R1		SAME AS A2A6A1A1R13	5- 72
A2A6A2A3R2		SAME AS A2A6A1A1R8	5- 72
A2A6A2A3R3		SAME AS A2A6A1A2R4	5- 72
A2A6A2A3R4		SAME AS A2A6A1A1R7	5- 72
A2A6A2A3R5		RESISTOR, MIL TYPE RC07GF331J	5- 72
A2A6A2A3R6		SAME AS A2A6A1A1R13	5- 72
A2A6A2A3R7		SAME AS A2A6A1A1R8	5- 72
A2A6A2A3R8		SAME AS A2A6A1A2R4	5- 72
A2A6A2A3R9		SAME AS A2A6A1A1R13	5- 72
A2A6A2A3R10		RESISTOR, MIL TYPE RC07GF821J	5- 72
A2A6A2A3R11		SAME AS A2A6A1A2R13	5- 72
A2A6A2A3R12		SAME AS A2A6A1A1R12	5- 72
A2A6A2A3R13		RESISTOR, MIL TYPE RC07GF510J	5- 72
A2A6A2A3R14		RESISTOR, MIL TYPE RC07GF202J	5- 72
A2A6A2A3R15		SAME AS A2A6A2A3R5	5- 72
A2A6A2A3R16		SAME AS A2A6A1A3R20	5- 72
A2A6A2A3T1		TRANSFORMER, VARIABLE, RADIO FREQUENCY, 7.9 MC, 0.620 IN. LG X 0.422 IN. DIA, MFR 58189, P/N 809000-245	5- 72
A2A6A2A3T2		TRANSFORMER, RADIO FREQUENCY, 7.9 MC, 0.620 IN. LG X 0.422 IN. DIA, MFR 58189, P/N 809000-388	5- 72
A2A6A2A3T3		TRANSFORMER, RADIO FREQUENCY, 25 MC, 0.620 IN. LG X 0.422 IN. DIA, MFR 58189, P/N 809000-389	5- 72
A2A6A2A3T4		TRANSFORMER, RADIO FREQUENCY, 7.9 MC, 0.620 IN. LG X 0.422 IN. DIA, MFR 58189, P/N 809000-390	5- 72
A2A6A2A3TP1-TP4		SAME AS A2A6A1A2TP1-TP2	5- 72
A2A6A2A3Y1		CRYSTAL UNIT, QUARTZ, 17.845 MC, MFR 58189, P/N 666163-642	5- 72
A2A6A2A3Y2		CRYSTAL UNIT, QUARTZ, 27.845 MC, MFR 58189, P/N 666163-643	5- 72
A2A6A2A4		FILTER, TRIPLE TUNED, PRINTED CIRCUIT BOARD W/ALL COMPONENTS ASSEMBLED FOR OPERATION, MFR 58189, P/N 666230-874	5- 76
A2A6A2A4C1-C6		SAME AS A2A6A1C1	5- 76
A2A6A2A4C7		CAPACITOR, FIXED, MICA DIELECTRIC, 47 UUF PORM 2 PCT, 300 WVDC, MFR 72136, P/N DM15E470G300V	5- 76

TABLE 6-2. MAINTENANCE PARTS LIST (Continued)

RADIO RECEIVER R-1051/URR

REF DESIG	NOTES	NAME AND DESCRIPTION	FIG. NO.
A2A6A2A4C8		SAME AS A2A6A1C1	5- 76
A2A6A2A4C9		CAPACITOR, FIXED, MICA DIELECTRIC, 62 UUF PORM 2 PCT, 300 WVDC, MFR 72136, P/N DM15E620G000V	5- 76
A2A6A2A4C10		CAPACITOR, FIXED, CERAMIC DIELECTRIC, 1.5 UUF PORM 5 PCT, 500 WVDC, MFR 78488, P/N GA1R5J500V	5- 76
A2A6A2A4C11		SAME AS A2A6A2A4C7	5- 76
A2A6A2A4C12		CAPACITOR, FIXED, CERAMIC DIELECTRIC, 3 UUF PORM 5 PCT, 500 WVDC, MFR 78488, P/N GA3R0J500V	5- 76
A2A6A2A4C13		SAME AS A2A6A2A4C9	5- 76
A2A6A2A4C14		SAME AS A2A6A2A4C10	5- 76
A2A6A2A4C15		SAME AS A2A6A2A4C7	5- 76
A2A6A2A4C16		SAME AS A2A6A2A4C12	5- 76
A2A6A2A4C17		SAME AS A2A6A2A4C9	5- 76
A2A6A2A4C18-C19		SAME AS A2A6A1C1	5- 76
A2A6A2A4C20		CAPACITOR, FIXED, MICA DIELECTRIC, 510 UUF PORM 2 PCT, 300 WVDC, MFR 72136, P/N DM15E511G300V	5- 76
A2A6A2A4C21-C23		SAME AS A2A6A1C1	5- 76
A2A6A2A4C24		CAPACITOR, FIXED, MICA DIELECTRIC, 560 UUF PORM 2 PCT, 300 WVDC, MFR 72136, P/N DM15E561G300V	5- 76
A2A6A2A4C25-C27		SAME AS A2A6A1C1	5- 76
A2A6A2A4L1		COIL, RADIO FREQUENCY, 25 MC, 0.620 IN. LG X 0.422 IN. DIA, MFR 58189, P/N 809000-409	5- 76
A2A6A2A4L2		COIL, RADIO FREQUENCY, 25 MC, 0.620 IN. LG X 0.422 IN. DIA, MFR 58189, P/N 809000-410	5- 76
A2A6A2A4L3		COIL, RADIO FREQUENCY, 27.847 MC, 0.620 IN. LG X 0.422 IN. DIA, MFR 58189, P/N 809000-411	5- 76
A2A6A2A4L4		TRANSFORMER, RADIO FREQUENCY, 25 MC, 0.620 IN. LG X 0.422 IN. DIA, MFR 58189, P/N 809000-412	5- 76
A2A6A2A4L5		COIL, RADIO FREQUENCY, 25 MC, 0.620 IN. LG X 0.422 IN. DIA, MFR 58189, P/N 809000-413	5- 76
A2A6A2A4L6		COIL, RADIO FREQUENCY, 25 MC, 0.620 IN. LG X 0.422 IN. DIA, MFR 58189, P/N 809000-409	5- 76
A2A6A2A4Q1-Q4		SAME AS A2A6A1A3Q4-Q5	5- 76
A2A6A2A4R1-R2		SAME AS A2A6A1A1R13	5- 76
A2A6A2A4R3		SAME AS A2A6A1A2R4	5- 76
A2A6A2A4R4-R5		SAME AS A2A6A1A1R8	5- 76
A2A6A2A4R6-R7		SAME AS A2A6A1A1R13	5- 76
A2A6A2A4R8-R9		SAME AS A2A6A1A1R8	5- 76
A2A6A2A4R10		SAME AS A2A6A2A3R5	5- 76
A2A6A2A4R11		SAME AS A2A6A1A2R4	5- 76
A2A6A2A4R12		RESISTOR, MIL TYPE RC07GF471J	5- 76

TABLE 6-2. MAINTENANCE PARTS LIST (Continued)

RADIO RECEIVER R-1051/URR

REF DESIG	NOTES	NAME AND DESCRIPTION	FIG. NO.
A2A6A2A4R13		SAME AS A2A6A1A1R13	5- 76
A2A6A2A4R14		SAME AS A2A6A1A1R8	5- 76
A2A6A2A4R15		SAME AS A2A6A1A1R13	5- 76
A2A6A2A4R16		SAME AS A2A6A1A1R8	5- 76
A2A6A2A4R17		SAME AS A2A6A1A1R7	5- 76
A2A6A2A4R18		SAME AS A2A6A1A1R13	5- 76
A2A6A2A4R19-R20		SAME AS A2A6A1A2R4	5- 76
A2A6A2A4R21-R22		SAME AS A2A6A1A1R15	5- 76
A2A6A2A4R23		SAME AS A2A6A2A4R12	5- 76
A2A6A2A4T1		TRANSFORMER, RADIO FREQUENCY, 25 MC, 0.620 IN. LG X 0.422 IN. DIA, MFR 58189, P/N 809000-382	5- 76
A2A6A2A4T2		TRANSFORMER, RADIO FREQUENCY, 25 MC, 0.620 IN. LG X 0.422 IN. DIA, MFR 58189, P/N 809000-383	5- 76
A2A6A2A4TP1-TP6		SAME AS A2A6A1A2TP1-TP2	5- 76
A2A6A2A5		AGC ASSEMPLY, PRINTED CIRCUIT BOARD W/ALL COMPONENTS ASSEMBLED FOR OPERATION, MFR 58189, P/N 666230-879	5- 80
A2A6A2A5C1-C10		SAME AS A2A6A1C1	5- 80
A2A6A2A5C11		CAPACITOR, FIXED, ELECTROLYTIC, 47 UF PORM 20 PCT, 35 WVDC, MFR 56289 P/N 15OD476X0035S2	5- 80
A2A6A2A5CR1		SAME AS A2A6A1A1CR1-CR2	5- 80
A2A6A2A5L1		SAME AS A2A6A1A2L3	5- 80
A2A6A2A5L2		COIL, RADIO FREQUENCY, 3.3 UF, MFR 99800, P/N 1537-714	5- 80
A2A6A2A5L3		SAME AS A2A6A1A2L3	5- 80
A2A6A2A5Q1		SAME AS A2A6A1A3Q4-Q5	5- 80
A2A6A2A5Q2-Q4		SAME AS A2A6A1A1Q1-Q4	5- 80
A2A6A2A5R1		RESISTOR, MIL TYPE RC07GF682J	5- 80
A2A6A2A5R2		SAME AS A2A6A1A1R8	5- 80
A2A6A2A5R3		SAME AS A2A6A1A1R15	5- 80
A2A6A2A5R4		SAME AS A2A6A1A1R3	5- 80
A2A6A2A5R5		RESISTOR, MIL TYPE RC07GF912J	5- 80
A2A6A2A5R6		SAME AS A2A6A2A4R12	5- 80
A2A6A2A5R7		RESISTOR, MIL TYPE RC07GF241J	5- 80
A2A6A2A5R8		SAME AS A2A6A1A1R10	5- 80
A2A6A2A5R9		SAME AS A2A6A1A1R3	5- 80
A2A6A2A5R10		SAME AS A2A6A2A5R5	5- 80
A2A6A2A5R11		SAME AS A2A6A2A4R12	5- 80
A2A6A2A5R12		SAME AS A2A6A1A1R6	5- 80
A2A6A2A5R13		RESISTOR, VARIABLE, 200 OHMS PORM 5 PCT, 1W, MFR 80294, P/N ~~3280~~3290W1-201	5- 80

TABLE 6-2. MAINTENANCE PARTS LIST (Continued)

RADIO RECEIVER R-1051/URR

REF DESIG	NOTES	NAME AND DESCRIPTION	FIG. NO.
A2A6A2A5R14		RESISTOR, MIL TYPE RC07GF162J	5- 80
A2A6A2A5R15		RESISTOR, MIL TYPE RC07GF104J	5- 80
A2A6A2A5R16		SAME AS A2A6A1A1R7	5- 80
A2A6A2A5R17		RESISTOR, MIL TYPE RC07GF200J	5- 80
A2A6A2A5TP1		JACK, TIP, MFR 74970, P/N 105-851	5- 80
A2A6A3	A,B	SYNTHESIZER ASSEMBLY, 1 AND 10 KC, MFR 58189, P/N 666230-635	5- 81
A2A6A3	C	SYNTHESIZER ASSEMBLY, 1 AND 10 KC, MFR 58189, P/N A09495-001	5- 81
A2A6A3C1-C24		NOT USED	
A2A6A3C25		SAME AS A2A6A1C2	5- 81
A2A6A3C26		CAPACITOR, FIXED, METALIZED PAPER DIELECTRIC, 0.05 UF PORM 20 PCT, 200 WVDC, MFR 02777, P/N T2900-1	5- 81
A2A6A3J1		JACK, TIP, MFR 98291, P/N FTM19RED	5- 88
A2A6A3J2		JACK, TIP, MFR 98291, P/N FTM19WHITE	5- 88
A2A6A3J3		NOT USED	
A2A6A3J4-J5		CONNECTOR, RECEPTACLE, ELECTRICAL, MFR 98291, P/N 3113	5- 88
A2A6A3J6		NOT USED	
A2A6A3J7		SAME AS A2A6A3J4-J5	5- 88
A2A6A3MP1-MP2		SAME AS A2A6A2MP6	5- 81
A2A6A3MP3-MP4		DETENT, SWITCH, 10 POSITIONS AT EVERY 36 DEGREES, MFR 58189, P/N 666163-514	5- 85
A2A6A3P1		SAME AS A2A6MP1	5- 81
A2A6A3P2		SAME AS A2A6MP3-MP5	5- 81
A2A6A3S1-S2		SAME AS A2A6A2S1	5- 81
A2A6A3Y1		CRYSTAL UNIT, QUARTZ, 5.25 MC, MFR 58189, P/N 666163-689	5- 85
A2A6A3Y2		CRYSTAL UNIT, QUARTZ, 5.24 MC, MFR 58189, P/N 666163-688	5- 81
A2A6A3Y3		CRYSTAL UNIT, QUARTZ, 5.23 MC, MFR 58189, P/N 666163-687	5- 81
A2A6A3Y4		CRYSTAL UNIT, QUARTZ, 5.22 MC, MFR 58189, P/N 666163-686	5- 81
A2A6A3Y5		CRYSTAL UNIT, QUARTZ, 5.21 MC, MFR 58189, P/N 666163-68K	5- 81
A2A6A3Y6		CRYSTAL UNIT, QUARTZ, 5.2 MC, MFR 58189, P/N 666163-684	5- 81
A2A6A3Y7		CRYSTAL UNIT, QUARTZ, 5.19 MC, MFR 58189, P/N 666163-683	5- 85
A2A6A3Y8		CRYSTAL UNIT, QUARTZ, 5.18 MC, MFR 58189, P/N 666163-68I	5- 85
A2A6A3Y9		CRYSTAL UNIT, QUARTZ, 5.17 MC, MFR 58189, P/N 666163-681	5- 85
A2A6A3Y10		CRYSTAL UNIT, QUARTZ, 5.16 MC, MFR 58189, P/N 666163-680	5- 85
A2A6A3Y11		CRYSTAL UNIT, QUARTZ, 1850 KC, MFR 58189, P/N 666163-690	5- 81
A2A6A3Y12		CRYSTAL UNIT, QUARTZ, 1.851 MC, MFR 58189, P/N 666163-691	5- 85
A2A6A3Y13		CRYSTAL UNIT, QUARTZ, 1.852 MC, MFR 58189, P/N 666163-692	5- 85
A2A6A3Y14		CRYSTAL UNIT, QUARTZ, 1.853 MC, MFR 58189, P/N 666163-693	5- 85

TABLE 6-2. MAINTENANCE PARTS LIST (Continued)

RADIO RECEIVER R-1051/URR

REF DESIG	NOTES	NAME AND DESCRIPTION	FIG. NO.
A2A6A3Y15		CRYSTAL UNIT, QUARTZ, 1.854 MC, MFR 58189, P/N 666163-694	5- 85
A2A6A3Y16		CRYSTAL UNIT, QUARTZ, 1.855 MC, MFR 58189, P/N 666163-695	5- 85
A2A6A3Y17		CRYSTAL UNIT, QUARTZ, 1.856 MC, MFR 58189, P/N 666163-696	5- 81
A2A6A3Y18		CRYSTAL UNIT, QUARTZ, 1.857 MC, MFR 58189, P/N 666163-697	5- 81
A2A6A3Y19		CRYSTAL UNIT, QUARTZ, 1.858 MC, MFR 58189, P/N 666163-698	5- 81
A2A6A3Y20		CRYSTAL UNIT, QUARTZ, 1.859 MC, MFR 58189, P/N 666163-699	5- 81
A2A6A3A1		OSCILLATOR ASSEMBLY, 5.16 TO 5.25 MC, PRINTED CIRCUIT BOARD W/ALL COMPONENTS ASSEMBLED FOR OPERATION, MFR 58189, P/N 666230-884	5- 82
A2A6A3A1C1		CAPACITOR, FIXED, CERAMIC DIELECTRIC, 33 UUF PORM 2 PCT, 500 WVDC, MFR 15450, P/N 301N2200-33G	5- 82
A2A6A3A1C2		SAME AS A2A6A1A1C9	5- 82
A2A6A3A1C3		SAME AS A2A6A1A1C7	5- 82
A2A6A3A1C4		SAME AS A2A6A1A1C3	5- 82
A2A6A3A1C5-C9		CAPACITOR, MIL TYPE CK06CW103M	5- 82
A2A6A3A1C10		SAME AS A2A6A1A1C11	5- 82
A2A6A3A1C11		SAME AS A2A6A1A1C10	5- 82
A2A6A3A1CR1-CR2		SAME AS A2A6A1A1CR1-CR2	5- 82
A2A6A3A1Q1		SAME AS A2A6A1A3Q2	5- 82
A2A6A3A1Q2		SAME AS A2A6A1A2Q1-Q2	5- 82
A2A6A3A1R1		RESISTOR, MIL TYPE RC07GF203J	5- 82
A2A6A3A1R2		RESISTOR, MIL TYPE RC07GF123J	5- 82
A2A6A3A1R3		SAME AS A2A6A1A1R6	5- 82
A2A6A3A1R4		RESISTOR, MIL TYPE RC07GF132J	5- 82
A2A6A3A1R5-R6		SAME AS A2A6A1A1R8	5- 82
A2A6A3A1R7		RESISTOR, MIL TYPE RC07GF5R1J	5- 82
A2A6A3A1R8		SAME AS A2A6A1A1R13	5- 82
A2A6A3A1R9		SAME AS A2A6A1A1R6	5- 82
A2A6A3A1R10		SAME AS A2A6A1A1R7	5- 82
A2A6A3A1R11		SAME AS A2A6A1A1R3	5- 82
A2A6A3A1R12		SAME AS A2A6A1A1R4	5- 82
A2A6A3A1R13		SAME AS A2A6A1A1R3	5- 82
A2A6A3A1R14		SAME AS A2A6A1A2R4	5- 82
A2A6A3A1R15		SAME AS A2A6A2A3R10	5- 82
A2A6A3A1R16		SAME AS A2A6A1A2R4	5- 82
A2A6A3A1RT1		SAME AS A2A6A1A1RT1	5- 82
A2A6A3A1T1		TRANSFORMER, VARIABLE, RADIO FREQUENCY, 7.9 MC, 0.620 IN. LG X 0.422 IN. DIA, MFR 58189, P/N 809000-240	5- 82

TABLE 6-2. MAINTENANCE PARTS LIST (Continued)

RADIO RECEIVER R-1051/URR

REF DESIG	NOTES	NAME AND DESCRIPTION	FIG. NO.
A2A6A3A1XQ1		NOT USED	
A2A6A3A1XQ2		SAME AS A2A6A1A2XQ1-XQ2	5- 82
A2A6A3A2		OSCILLATOR ASSEMBLY, 1.850 TO 1.859 MC, PRINTED CIRCUIT BOARD W/ALL COMPONENTS ASSEMBLED FOR OPERATION, MFR 58189, P/N 666230-889	5- 83
A2A6A3A2C1		CAPACITOR, FIXED, CERAMIC DIELECTRIC, 43 UUF PORM 2 PCT, 500 WVDC, MFR 15450, P/N 301N5600-43G	5- 83
A2A6A3A2C2		SAME AS A2A6A1A1C10	5- 83
A2A6A3A2C3		SAME AS A2A6A2A2C8-C9	5- 83
A2A6A3A2C4		SAME AS A2A6A1A2C3	5- 83
A2A6A3A2C5		SAME AS A2A6A3A1C5-C9	5- 83
A2A6A3A2C6-C7		SAME AS A2A6A3C26	5- 83
A2A6A3A2C8		SAME AS A2A6A3A1C5-C9	5- 83
A2A6A3A2C9		SAME AS A2A6A3C26	5- 83
A2A6A3A2C10		SAME AS A2A6A2A2C8-C9	5- 83
A2A6A3A2CR1-CR2		SAME AS A2A6A1A1CR1-CR2	5- 83
A2A6A3A2Q1		SAME AS A2A6A1A3Q2	5- 83
A2A6A3A2Q2		SAME AS A2A6A1A2Q1-Q2	5- 83
A2A6A3A2R1		SAME AS A2A6A3A1R1	5- 83
A2A6A3A2R2		SAME AS A2A6A3A1R2	5- 83
A2A6A3A2R3		SAME AS A2A6A1A1R6	5- 83
A2A6A3A2R4		SAME AS A2A6A3A1R4	5- 83
A2A6A3A2R5		SAME AS A2A6A1A3R14	5- 83
A2A6A3A2R6		SAME AS A2A6A1A1R8	5- 83
A2A6A3A2R7		SAME AS A2A6A1A1R9	5- 83
A2A6A3A2R8		SAME AS A2A6A1A1R13	5- 83
A2A6A3A2R9		SAME AS A2A6A1A2R14	5- 83
A2A6A3A2R10		SAME AS A2A6A1A1R7	5- 83
A2A6A3A2R11		SAME AS A2A6A1A1R3	5- 83
A2A6A3A2R12		SAME AS A2A6A1A1R4	5- 83
A2A6A3A2R13		SAME AS A2A6A1A1R3	5- 83
A2A6A3A2R14		SAME AS A2A6A1A2R4	5- 83
A2A6A3A2R15		SAME AS A2A6A1A1R6	5- 83
A2A6A3A2R16		SAME AS A2A6A2A5R7	5- 83
A2A6A3A2T1		TRANSFORMER, VARIABLE, RADIO FREQUENCY, 7.9 MC, 0.620 IN. LG X 0.422 IN. DIA, MFR 58189, P/N 809000-243	5- 83
A2A6A3A2XQ1		NOT USED	
A2A6A3A2XQ2		SAME AS A2A6A1A2XQ1-XQ2	5- 83

TABLE 6-2. MAINTENANCE PARTS LIST (Continued)

RADIO RECEIVER R-1051/URR

REF DESIG	NOTES	NAME AND DESCRIPTION	FIG. NO.
A2A6A3A3	A,B	OUTPUT AND BLANKER SUBASSEMBLY, 1 AND 10 KC, COMPONENT BOARD W/ALL COMPONENTS ASSEMBLED FOR OPERATION, MFR 58189, P/N 666163-669	5- 86
A2A6A3A3	C	OUTPUT AND BLANKER SUBASSEMBLY, 1 AND 10 KC, COMPONENT BOARD W/ALL COMPONENTS ASSEMBLED FOR OPERATION, MFR 58189, P/N A09449-001	5- 86
A2A6A3A3C1-C45		NOT USED	
A2A6A3A3C46-C47		SAME AS A2A6A3C26	5- 86
A2A6A3A3C48-C49		CAPACITOR, FIXED, MICA DIELECTRIC, 470 UUF PORM 1 PCT, 300 WVDC, MFR 72136, P/N DM15E471F300V	5- 86
A2A6A3A3C50		CAPACITOR, FIXED, MICA DIELECTRIC, 15 UUF PORM 3 PCT, 300 WVDC MFR 72136, P/N DM15C150H300V	5- 86
A2A6A3A3C51		SAME AS A2A6A3A3C48-C49	5- 86
A2A6A3A3C52		SAME AS A2A6A3A3C50	5- 86
A2A6A3A3C53		CAPACITOR, FIXED, ELECTROLYTIC, 1 UF PORM 10 PCT, 35 WVDC, MFR 56289, P/N 150D105X9035A2	5- 86
A2A6A3A3C54		SAME AS A2A6A3A3C48-C49	5- 86
A2A6A3A3C55		SAME AS A2A6A3C26	5- 86
A2A6A3A3C56		SAME AS A2A6A3A3C50	5- 86
A2A6A3A3CR1-CR6		NOT USED	
A2A6A3A3CR7		SEMICONDUCTOR DEVICE, DIODE, MFR 03508, P/N DHD569	5- 86
A2A6A3A3J1-J2		NOT USED	
A2A6A3A3J3		CONNECTOR, RECEPTACLE, ELECTRICAL, MFR 98291, P/N 3108	5- 86
A2A6A3A3J4-J5		NOT USED	
A2A6A3A3J6		SAME AS A2A6A3A3J3	5- 86
A2A6A3A3J7		NOT USED	
A2A6A3A3J8-J9		TERMINAL, FEED THRU, INSULATED, MFR 98291, P/N FTSM9WHITE	5- 86
A2A6A3A3J10	A,B	SAME AS A2A6A3A3J8-J9	5- 86
A2A6A3A3J10	C	NOT USED	
A2A6A3A3L1-L4		NOT USED	
A2A6A3A3L5		COIL, RADIO FREQUENCY, 3.35 MC, 0.620 IN. LG X 0.422 IN. DIA, MFR 58189, P/N 809000-425	5- 86
A2A6A3A3L6-L7		COIL, RADIO FREQUENCY, 3.35 MC, 0.620 IN. LG X 0.422 IN. DIA, MFR 58189, P/N 809000-426	5- 86
A2A6A3A3Q1-Q10		NOT USED	
A2A6A3A3Q11		SAME AS A2A6A1A2Q1-Q2	5- 86
A2A6A3A3Q12		TRANSISTOR, MFR 80131, P/N 2N1301	5- 86
A2A6A3A3R1-R46		NOT USED	
A2A6A3A3R47		SAME AS A2A6A1A1R8	5- 86
A2A6A3A3R48		SAME AS A2A6A1A1R7	5- 86
A2A6A3A3R49		SAME AS A2A6A1A2R4	5- 86

TABLE 6-2. MAINTENANCE PARTS LIST (Continued)

RADIO RECEIVER R-1051/URR

REF DESIG	NOTES	NAME AND DESCRIPTION	FIG. NO.
A2A6A3A3R50		SAME AS A2A6A1A3R3	5- 86
A2A6A3A3R51		SAME AS A2A6A1A1R7	5- 86
A2A6A3A3R52 SELECT		RESISTOR, MIL TYPE RC07GF120J	5- 86
A2A6A3A3R52 SELECT		SAME AS A2A6A2A1R8	5- 86
A2A6A3A3R52 SELECT		RESISTOR, MIL TYPE RC07GF180J	5- 86
A2A6A3A3R52 SELECT		SAME AS A2A6A2A5R17	5- 86
A2A6A3A3R52 SELECT		RESISTOR, MIL TYPE RC07GF220J	5- 86
A2A6A3A3R52 SELECT		RESISTOR, MIL TYPE RC07GF240J	5- 86
A2A6A3A3R52 SELECT		RESISTOR, MIL TYPE RC07GF270J	5- 86
A2A6A3A3R52 SELECT		SAME AS A2A6A1A3R20	5- 86
A2A6A3A3R52 SELECT		RESISTOR, MIL TYPE RC07GF330J	5- 86
A2A6A3A3R52 SELECT		RESISTOR, MIL TYPE RC07GF360J	5- 86
A2A6A3A3R52 SELECT		SAME AS A2A6A1A3R15	5- 86
A2A6A3A3R53		NOT USED	
A2A6A3A3R54		SAME AS A2A6A1A1R13	5- 86
A2A6A3A3T1-T2		NOT USED	
A2A6A3A3T3		TRANSFORMER, VARIABLE, RADIO FREQUENCY, 3.35 MC, 0.620 IN. LG X 0.422 IN. DIA, MFR 58189, P/N 809000-428	5- 86
A2A6A3A3TP1-TP3		SAME AS A2A6A1A2TP1-TP2	5- 86
A2A6A3A3XQ1-XQ10		NOT USED	
A2A6A3A3XQ11		SAME AS A2A6A1A2XQ1-XQ2	5- 86
A2A6A3A3XQ12		MOUNTING PAD, TRANSISTOR, 0.344 IN. DIA X 0.075 IN. THK, MFR 07047, P/N 10012	5- 86
A2A6A3A4	A,B	ERROR MIXER ASSEMBLY, 1 AND 10 KC, PRINTED CIRCUIT BOARD W/ALL COMPONENTS ASSEMBLED FOR OPERATION, MFR 58189, P/N 666230-899	5- 84
A2A6A3A4	C	ERROR MIXER ASSEMBLY, 1 AND 10 KC, PRINTED CIRCUIT BOARD W/ALL COMPONENTS ASSEMBLED FOR OPERATION, MFR 58189, P/N A09493-001	5- 84
A2A6A3A4C1-C3		SAME AS A2A6A1C1	5- 84
A2A6A3A4C4-C5		CAPACITOR, FIXED, MICA DIELECTRIC, 15 UUF PORM 5 PCT, 500 WVDC, MFR 72136, P/N DM15C150J500V	5- 84
A2A6A3A4C6		SAME AS A2A6A1C1	5- 84
A2A6A3A4C7		CAPACITOR, FIXED, MICA DIELECTRIC, 220 UUF PORM 2 PCT, 300 WVDC, MFR 72136, P/N DM15E221G300V	5- 84
A2A6A3A4C8		CAPACITOR, FIXED, MICA DIELECTRIC, 5 UUF PORM 5 PCT, 500 WVDC, MFR 72136, P/N DM15C050J500V	5- 84
A2A6A3A4C9		CAPACITOR, FIXED, MICA DIELECTRIC, 68 UUF PORM 2 PCT, 300 WVDC, MFR 72136, P/N DM15E680G000V	5- 84
A2A6A3A4C10		SAME AS A2A6A1A1C11	5- 84
A2A6A3A4C11-C12	A,B	SAME AS A2A6A3C26	5- 84
A2A6A3A4C11-C12	C	SAME AS A2A6A1C1	5- 84

TABLE 6-2. MAINTENANCE PARTS LIST (Continued)

RADIO RECEIVER R-1051/URR

REF DESIG	NOTES	NAME AND DESCRIPTION	FIG. NO.
A2A6A3A4C13		SAME AS A2A6A3C26	5- 84
A2A6A3A4FL1		FILTER, BAND PASS, 9.07 MC, MFR 19057, P/N 790900	5- 84
A2A6A3A4FL2		FILTER, BAND PASS, 1.981 MC, MFR 19057, P/N 767109	5- 84
A2A6A3A4L1-L2		NOT USED	
A2A6A3A4L3		TRANSFORMER, AUDIO FREQUENCY, 10 KC, MFR 58189, P/N 666163-544	5- 84
A2A6A3A4L4		TRANSFORMER, AUDIO FREQUENCY, 1 KC, MFR 58189, P/N 666163-543	5- 84
A2A6A3A4Q1-Q7		NOT USED	
A2A6A3A4Q8	A,B	TRANSISTOR, MFR 04713, P/N 2N700	5- 84
A2A6A3A4Q8	C	SAME AS A2A6A1A3Q4-Q5	5- 84
A2A6A3A4Q9		SAME AS A2A6A1A3Q4-Q5	84
A2A6A3A4R1		SAME AS A2A6A1A1R13	5- 84
A2A6A3A4R2		SAME AS A2A6A1A1R8	5- 84
A2A6A3A4R3		SAME AS A2A6A1A1R7	5- 84
A2A6A3A4R3		SAME AS A2A6A1A1R13	5- 84
A2A6A3A4R4		SAME AS A2A6A1A2R4	5- 84
A2A6A3A4R5		SAME AS A2A6A1A3R9	5- 84
A2A6A3A4R6		SAME AS A2A6A1A3R29	5- 84
A2A6A3A4R7		SAME AS A2A6A1A1R4	5- 84
A2A6A3A4R8		SAME AS A2A6A1A1R13	5- 84
A2A6A3A4R9		SAME AS A2A6A1A1R8	5- 84
A2A6A3A4R10	A,B	SAME AS A2A6A1A1R7	5- 84
A2A6A3A4R10	C	SAME AS A2A6A1A1R13	5- 84
A2A6A3A4R11	A,B	SAME AS A2A6A1A2R4	5- 84
A2A6A3A4R11	C	SAME AS A2A6A2A4R12	5- 84
A2A6A3A4R12		SAME AS A2A6A1A2R4	5- 84
A2A6A3A4R13-R29		NOT USED	
A2A6A3A4R30-R31	A,B	NOT USED	
A2A6A3A4R30	C	SAME AS A2A6A2A1R8	5- 84
A2A6A3A4R31	C	RESISTOR, MIL TYPE RC07GF620J	5- 84
A2A6A3A4T1		TRANSFORMER, RADIO FREQUENCY, 7.9 MC, 0.620 IN. LG X 0.422 IN. DIA, MFR 58189, P/N 809000-386	5- 84
A2A6A3A4Z1		ERROR MIXER ASSEMBLY, 1 KC, MFR 58189, P/N 666163-565	5- 84
A2A6A3A4Z2		ISOLATION AMPLIFIER, 1 KC, MFR 58189, P/N 666231-880	5- 84
A2A6A3A4Z3		AMPLIFIER, ISOLATION 10 AND 100 KC, MFR 58189, P/N 666163-567	5- 84
A2A6A4		SYNTHESIZER ASSEMBLY, 500CPS, MFR 58189, P/N 666230-643	5- 89
A2A6A4P1		CONNECTOR, RECEPTACLE, ELECTRICAL, 2.088 IN. LG X 0.494 IN. W X 0.663 IN. H, MFR 91146, P/N DBM13W3PC31F115	5- 89

TABLE 6-2. MAINTENANCE PARTS LIST (Continued)

RADIO RECEIVER R-1051/URR

REF DESIG	NOTES	NAME AND DESCRIPTION	FIG. NO.
A2A6A4A1		MIXER ASSEMBLY, 7.1 MC, PRINTED CIRCUIT BOARD W/ALL COMPONENTS ASSEMBLED FOR OPERATION, MFR 58189, P/N 666230-904	5- 90
A2A6A4A1C1		SAME AS A2A6A1A1C18-C20	5- 90
A2A6A4A1C2-C4		SAME AS A2A6A1C1	5- 90
A2A6A4A1C5-C6		CAPACITOR, FIXED, MICA DIELECTRIC, 10 UUF PORM 1 PCT, 500 WVDC, MFR 72136, P/N DM15C100F500V	5- 90
A2A6A4A1C7-C10		SAME AS A2A6A1C1	5- 90
A2A6A4A1C11		CAPACITOR, FIXED, MICA DIELECTRIC, 470 UUF PORM 2 PCT, 300 WVDC, MFR 72136, P/N DM15E471G300V	5- 90
A2A6A4A1C12		SAME AS A2A6A1C1	5- 90
A2A6A4A1C13		SAME AS A2A6A1C2	5- 90
A2A6A4A1C14		CAPACITOR, FIXED, ELECTROLYTIC, 2.2 UF PORM 20 PCT, 35 WVDC, MFR 56289, P/N 150D225X0035B2	5- 90
A2A6A4A1C15		CAPACITOR, FIXED, ELECTROLYTIC, 1 UF PORM 20 PCT, 35 WVDC, MFR 56289, P/N 150D105X0035A2	5- 90
A2A6A4A1C16		SAME AS A2A6A4A1C14	5- 90
A2A6A4A1C17		CAPACITOR, FIXED, MICA DIELECTRIC, 4300 UUF PORM 2 PCT, 100 WVDC, MFR 72136, P/N DM20F432G100V	5- 90
A2A6A4A1C18		SAME AS A2A6A4A1C14	5- 90
A2A6A4A1C19-C20		SAME AS A2A6A4A1C15	5- 90
A2A6A4A1FL1		FILTER, BAND PASS, 7.1 MC, MFR 19057, P/N 767701	5- 90
A2A6A4A1L1-L2		SAME AS A2A6A1L1-L2	5- 90
A2A6A4A1MP1-MP2		SAME AS A2A6MP19	5- 90
A2A6A4A1Q1		SAME AS A2A6A1A3Q4-Q5	5- 90
A2A6A4A1Q2-Q3		TRANSISTOR, MFR 80131, P/N 2N1142	5- 90
A2A6A4A1Q4		TRANSISTOR, MFR 80131, P/N 2N706	5- 90
A2A6A4A1Q5		SAME AS A2A6A1A2Q1-Q2	5- 90
A2A6A4A1R1		SAME AS A2A6A1A1R13	5- 90
A2A6A4A1R2		SAME AS A2A6A1A1R8	5- 90
A2A6A4A1R3		SAME AS A2A6A1A1R18	5- 90
A2A6A4A1R4		SAME AS A2A6A1A1R7	5- 90
A2A6A4A1R5		SAME AS A2A6A1A3R20	5- 90
A2A6A4A1R6-R7		SAME AS A2A6A1A1R14	5- 90
A2A6A4A1R8		SAME AS A2A6A1A1R13	5- 90
A2A6A4A1R9		SAME AS A2A6A1A1R8	5- 90
A2A6A4A1R10		SAME AS A2A6A1A1R18	5- 90
A2A6A4A1R11		RESISTOR, MIL TYPE RC07GF332J	5- 90
A2A6A4A1R12		SAME AS A2A6A1A1R18	5- 90
A2A6A4A1R13		RESISTOR, MIL TYPE RC07GF122J	5- 90

TABLE 6-2. MAINTENANCE PARTS LIST (Continued)

RADIO RECEIVER R-1051/URR

REF DESIG	NOTES	NAME AND DESCRIPTION	FIG. NO.
A2A6A4A1R14		SAME AS A2A6A1A1R13	5- 90
A2A6A4A1R15		SAME AS A2A6A1A1R8	5- 90
A2A6A4A1R16		SAME AS A2A6A2A5R13	5- 90
A2A6A4A1R17		SAME AS A2A6A1A1R15	5- 90
A2A6A4A1R18		SAME AS A2A6A1A2R4	5- 90
A2A6A4A1R19		SAME AS A2A6A1A1R13	5- 90
A2A6A4A1R20		SAME AS A2A6A1A1R8	5- 90
A2A6A4A1R21		SAME AS A2A6A1A2R4	5- 90
A2A6A4A1R22		SAME AS A2A6A1A3R6	5- 90
A2A6A4A1R23		RESISTOR, MIL TYPE RC07GF272J	5- 90
A2A6A4A1R24		SAME AS A2A6A4A1R13	5- 90
A2A6A4A1R25		SAME AS A2A6A1A1R13	5- 90
A2A6A4A1R26		RESISTOR, MIL TYPE RC07GF273J	5- 90
A2A6A4A1T1		TRANSFORMER, VARIABLE, RADIO FREQUENCY, 7.9 MC, 0.620 IN. LG X 0.422 IN. DIA, MFR 58189, P/N 809000-244	5- 90
A2A6A4A1T2		TRANSFORMER, RADIO FREQUENCY, 11.5 KC, 0.562 IN. LG X 0.625 IN. DIA, MFR 58189, P/N 809000-430	5- 90
A2A6A4A1TP1-TP4		SAME AS A2A6A1A2TP1-TP2	5- 90
A2A6A4A1TP5		NOT USED	
A2A6A4A1TP6		SAME AS A2A6A1A2TP1-TP2	5- 90
A2A6A4A1XQ1		NOT USED	
A2A6A4A1XQ2-XQ3		SAME AS A2A6A3A3XQ12	5- 90
A2A6A4A1XQ4		NOT USED	
A2A6A4A1XQ5		SAME AS A2A6A1A2XQ1-XQ2	5- 90
A2A6A4A2		DIVIDER ASSEMBLY, PRINTED CIRCUIT BOARD W/ALL COMPONENTS ASSEMBLED FOR OPERATION, MFR 58189, P/N 666230-909	5- 94
A2A6A4A2C1		SAME AS A2A6A3A1C5-C9	5- 94
A2A6A4A2C2		SAME AS A2A6A1C2	5- 94
A2A6A4A2C3		SAME AS A2A6A1A2C10	5- 94
A2A6A4A2C4		CAPACITOR, FIXED, CERAMIC DIELECTRIC, 0.001 UF PORM 20 PCT, 75 WVDC, MFR 86335, P/N K1200M.001M	5- 94
A2A6A4A2C5		CAPACITOR, FIXED, ELECTROLYTIC, 1 UF PORM 20 PCT, 20 WVDC, MFR 56289, P/N 150D105X0020A2	5- 94
A2A6A4A2C6		CAPACITOR, FIXED, MICA DIELECTRIC, 27 UUF PORM 2 PCT, 300 WVDC, MFR 72136, P/N DM15E270G300V	5- 94
A2A6A4A2C7		SAME AS A2A6A3A1C5-C9	5- 94
A2A6A4A2C8-C9		SAME AS A2A6A1A1C17	5- 94
A2A6A4A2C10		SAME AS A2A6A2A4C7	5- 94
A2A6A4A2C11		SAME AS A2A6A3A1C5-C9	5- 94

TABLE 6-2. MAINTENANCE PARTS LIST (Continued)

RADIO RECEIVER R-1051/URR

REF DESIG	NOTES	NAME AND DESCRIPTION	FIG. NO.
A2A6A4A2C12-C13		SAME AS A2A6A1A1C17	5- 94
A2A6A4A2C14		SAME AS A2A6A4A2C6	5- 94
A2A6A4A2C15		SAME AS A2A6A3A1C5-C9	5- 94
A2A6A4A2C16-C17		SAME AS A2A6A1A1C17	5- 94
A2A6A4A2C18		SAME AS A2A6A4A2C6	5- 94
A2A6A4A2C19		SAME AS A2A6A3A1C5-C9	5- 94
A2A6A4A2C20-C21		SAME AS A2A6A1A1C17	5- 94
A2A6A4A2C22		SAME AS A2A6A1A2C10	5- 94
A2A6A4A2C23		SAME AS A2A6A4A1C15	5- 94
A2A6A4A2C24-C25		SAME AS A2A6A2A4C7	5- 94
A2A6A4A2CR1		SAME AS A2A6A1A3CR1	5- 94
A2A6A4A2CR2-CR12		SAME AS A2A6A1A2CR1	5- 94
A2A6A4A2L1		SAME AS A2A6A1L1-L2	5- 94
A2A6A4A2Q1-Q9		TRANSISTOR, MFR 80131, P/N 2N705	5- 94
A2A6A4A2R1		RESISTOR, FIXED, WIREWOUND, 270 OHMS PORM 3 PCT, 1W, MFR 91637, P/N RS1A271H	5- 94
A2A6A4A2R2		SAME AS A2A6A1A3R9	5- 94
A2A6A4A2R3		SAME AS A2A6A2A5R1	5- 94
A2A6A4A2R4		SAME AS A2A6A4A1R11	5- 94
A2A6A4A2R5		SAME AS A2A6A1A1R7	5- 94
A2A6A4A2R6		SAME AS A2A6A1A1R13	5- 94
A2A6A4A2R7		SAME AS A2A6A1A1R17	5- 94
A2A6A4A2R8		SAME AS A2A6A1A1R13	5- 94
A2A6A4A2R9		SAME AS A2A6A2A5R1	5- 94
A2A6A4A2R10		SAME AS A2A6A1A1R13	5- 94
A2A6A4A2R11		SAME AS A2A6A1A1R10	5- 94
A2A6A4A2R12		SAME AS A2A6A1A1R13	5- 94
A2A6A4A2R13		SAME AS A2A6A2A5R1	5- 94
A2A6A4A2R14		SAME AS A2A6A1A1R13	5- 94
A2A6A4A2R15		SAME AS A2A6A1A1R10	5- 94
A2A6A4A2R16		SAME AS A2A6A1A1R17	5- 94
A2A6A4A2R17		SAME AS A2A6A2A5R1	5- 94
A2A6A4A2R18		SAME AS A2A6A1A1R13	5- 94
A2A6A4A2R19		SAME AS A2A6A1A1R10	5- 94
A2A6A4A2R20-R21		SAME AS A2A6A1A1R13	5- 94
A2A6A4A2R22		SAME AS A2A6A2A5R1	5- 94

TABLE 6-2. MAINTENANCE PARTS LIST (Continued)

RADIO RECEIVER R-1051/URR

REF DESIG	NOTES	NAME AND DESCRIPTION	FIG. NO.
A2A6A4A2R23		SAME AS A2A6A1A1R13	5- 94
A2A6A4A2R24		SAME AS A2A6A1A1R10	5- 94
A2A6A4A2R25		SAME AS A2A6A1A1R17	5- 94
A2A6A4A2R26		SAME AS A2A6A2A5R1	5- 94
A2A6A4A2R27		SAME AS A2A6A1A1R13	5- 94
A2A6A4A2R28		SAME AS A2A6A1A1R10	5- 94
A2A6A4A2R29		SAME AS A2A6A1A1R13	5- 94
A2A6A4A2R30		SAME AS A2A6A2A5R1	5- 94
A2A6A4A2R31		SAME AS A2A6A1A1R13	5- 94
A2A6A4A2R32		SAME AS A2A6A1A1R10	5- 94
A2A6A4A2R33		SAME AS A2A6A1A1R17	5- 94
A2A6A4A2R34		SAME AS A2A6A2A5R1	5- 94
A2A6A4A2R35		SAME AS A2A6A1A1R13	5- 94
A2A6A4A2R36		SAME AS A2A6A2A5R14	5- 94
A2A6A4A2R37		SAME AS A2A6A1A1R13	5- 94
A2A6A4A2R38		SAME AS A2A6A2A5R1	5- 94
A2A6A4A2R39		SAME AS A2A6A1A1R13	5- 94
A2A6A4A2R40		SAME AS A2A6A1A1R10	5- 94
A2A6A4A2R41		SAME AS A2A6A1A1R4	5- 94
A2A6A4A2TP1-TP3		SAME AS A2A6A1A2TP1-TP2	5- 94
A2A6A4A2TP4		SAME AS A2A6A1A2TP3	5- 94
A2A6A4A2TP5		SAME AS A2A6A1A2TP1-TP2	5- 94
A2A6A4A3		OSCILLATOR, 500 CPS, PRINTED CIRCUIT BOARD W/ALL COMPONENTS ASSEMBLED FOR OPERATION, MFR 58189, P/N 666230-970	5- 92
A2A6A4A3C1		SAME AS A2A6A1C1	5- 92
A2A6A4A3C2		SAME AS A2A6A1C2	5- 92
A2A6A4A3C3		SAME AS A2A6A1C1	5- 92
A2A6A4A3C4		CAPACITOR, FIXED, MICA DIELECTRIC, 0.01 UF PORM 2 PCT, 100 WVDC, MFR 72136, P/N DM20F103G100V	5- 92
A2A6A4A3C5		CAPACITOR, MIL TYPE CM06F432G03	5- 92
A2A6A4A3C6		SAME AS A2A6A1A2C10	5- 92
A2A6A4A3C7-C8		SAME AS A2A6A2A4C20	5- 92
A2A6A4A3C9		CAPACITOR, FIXED, MICA DIELECTRIC, 100 UUF PORM 2 PCT, 300 WVDC, MFR 72136, P/N DM15E101G300V	5- 92
A2A6A4A3C10 SELECT		SAME AS A2A6A4A1C5-C6	5- 92
A2A6A4A3C10 SELECT		CAPACITOR, FIXED, MICA DIELECTRIC, 12 UUF PORM 1 PCT, 500 WVDC, MFR 72136, P/N DM15C120F500V	5- 92
A2A6A4A3C10 SELECT		CAPACITOR, FIXED, MICA DIELECTRIC, 15 UUF PORM 1 PCT, 500 WVDC, MFR 72136, P/N DM15C150F500V	5- 92

TABLE 6-2. MAINTENANCE PARTS LIST (Continued)

RADIO RECEIVER R-1051/URR

REF DESIG	NOTES	NAME AND DESCRIPTION	FIG. NO.
A2A6A4A3C10 SELECT		CAPACITOR, FIXED, MICA DIELECTRIC, 18 UUF PORM 1 PCT, 500 WVDC, MFR 72136, P/N DM15C180F500V	5- 92
A2A6A4A3C10 SELECT		CAPACITOR, FIXED, MICA DIELECTRIC, 20 UUF PORM 1 PCT, 500 WVDC, MFR 72136, P/N DM15C200F500V	5- 92
A2A6A4A3C10 SELECT		CAPACITOR, FIXED, MICA DIELECTRIC, 22 UUF PORM 1 PCT, 500 WVDC, MFR 72136, P/N DM15C220F500V	5- 92
A2A6A4A3C10 SELECT		CAPACITOR, FIXED, MICA DIELECTRIC, 24 UUF PORM 1 PCT, 500 WVDC, MFR 72136, P/N DM15C240F500V	5- 92
A2A6A4A3C10 SELECT		CAPACITOR, FIXED, MICA DIELECTRIC, 27 UUF PORM 1 PCT, 500 WVDC, MFR 72136, P/N DM15E270F500V	5- 92
A2A6A4A3C10 SELECT		CAPACITOR, FIXED, MICA DIELECTRIC, 30 UUF PORM 1 PCT, 500 WVDC, MFR 72136, P/N DM15E300F500V	5- 92
A2A6A4A3C10 SELECT		CAPACITOR, FIXED, MICA DIELECTRIC, 33 UUF PORM 1 PCT, 500 WVDC, MFR 72136, P/N DM15E330F500V	5- 92
A2A6A4A3C10 SELECT		CAPACITOR, FIXED, MICA DIELECTRIC, 36 UUF PORM 1 PCT, 500 WVDC, MFR 72136, P/N DM15E360F500V	5- 92
A2A6A4A3C10 SELECT		CAPACITOR, FIXED, MICA DIELECTRIC, 39 UUF PORM 1 PCT, 500 WVDC, MFR 72136, P/N DM15E390F500V	5- 92
A2A6A4A3C11		CAPACITOR, FIXED, CERAMIC DIELECTRIC, 47 UUF PORM 2 PCT, 500 WVDC, MFR 15450, P/N 301N2200-47G	5- 92
A2A6A4A3C12-C13		SAME AS A2A6A1C1	5- 92
A2A6A4A3C14		SAME AS A2A6A1A2C10	5- 92
A2A6A4A3C15		CAPACITOR, FIXED, ELECTROLYTIC, 6.8 UF PORM 20 PCT, 15 WVDC, MFR 56289, P/N 150D685X0015B2	5- 92
A2A6A4A3C16		SAME AS A2A6A4A1C14	5- 92
A2A6A4A3C17		SAME AS A2A6A1A2C10	5- 92
A2A6A4A3C18		CAPACITOR, FIXED, ELECTROLYTIC, 6.8 UF PORM 20 PCT, 20 WVDC, MFR 56289, P/N 150D685X0020B2	5- 92
A2A6A4A3C19		CAPACITOR, FIXED, CERAMIC DIELECTRIC, 0.002 UF PORM 20 PCT, 75 WVDC, MFR 86335, P/N K1200M.002M	5- 92
A2A6A4A3C20-C21		SAME AS A2A6A1C1	5- 92
A2A6A4A3C22		CAPACITOR, FIXED, ELECTROLYTIC, 2.2 UF PORM 20 PCT, 20 WVDC, MFR 56289, P/N 150D225X0020A2	5- 92
A2A6A4A3C23-C24		SAME AS A2A6A1A2C10	5- 92
A2A6A4A3C25		SAME AS A2A6A1C1	5- 92
A2A6A4A3CR1		SEMICONDUCTOR DEVICE, DIODE, MFR 12954, P/N DT30319C	5- 92
A2A6A4A3CR2-CR4		SEMICONDUCTOR DEVICE, DIODE, MFR 73293, P/N HC7005B	5- 92
A2A6A4A3CR5-CR6		SEMICONDUCTOR DEVICE, DIODE, MFR 07933, P/N RD2728	5- 92
A2A6A4A3CR7		SAME AS A2A6A1A2CR1	5- 92
A2A6A4A3CR8-CR9		SAME AS A2A6A1A1CR1-CR2	5- 92
A2A6A4A3J1		SAME AS A2A6A3A3J8-J9	5- 92
A2A6A4A3L1		SAME AS A2A6A1L1-L2	5- 92
A2A6A4A3L2-L3		COIL, RADIO FREQUENCY, 150,000 UH, MFR 03550, P/N 7875	5- 92

TABLE 6-2. MAINTENANCE PARTS LIST (Continued)

RADIO RECEIVER R-1051/URR

REF DESIG	NOTES	NAME AND DESCRIPTION	FIG. NO.
A2A6A4A3L4		TRANSFORMER, RADIO FREQUENCY, 110 KC, 0.562 IN. LG X 0.625 IN. DIA, MFR 58189, P/N 809000-429	5- 92
A2A6A4A3L5-L6		SAME AS A2A6A1L1-L2	5- 92
A2A6A4A3L7		REACTOR, MFR 80223, P/N EH734	5- 92
A2A6A4A3MP1		SAME AS A2A6A1MP5	5- 92
A2A6A4A3P1		JACK, TIP, MFR 98291, P/N SKT14WHITE	5- 92
A2A6A4A3Q1-Q3		SAME AS A2A6A1A2Q3	5- 92
A2A6A4A3Q4-Q6		SAME AS A2A6A1A3Q2	5- 92
A2A6A4A3Q7		SAME AS A2A6A1A2Q1-Q2	5- 92
A2A6A4A3R1		SAME AS A2A6A4A2R1	5- 92
A2A6A4A3R2		SAME AS A2A6A2A5R15	5- 92
A2A6A4A3R3		RESISTOR, FIXED, WIREWOUND, 220 OHMS PORM 3 PCT, 1W, MFR 91637, P/N RS1A221H	5- 92
A2A6A4A3R4		SAME AS A2A6A2A3R14	5- 92
A2A6A4A3R5		SAME AS A2A6A1A1R13	5- 92
A2A6A4A3R6		RESISTOR, MIL TYPE RC07GF134J	5- 92
A2A6A4A3R7		SAME AS A2A6A1A1R13	5- 92
A2A6A4A3R8		SAME AS A2A6A1A1R6	5- 92
A2A6A4A3R9		SAME AS A2A6A1A1R13	5- 92
A2A6A4A3R10		SAME AS A2A6A1A1R4	5- 92
A2A6A4A3R11		SAME AS A2A6A2A5R15	5- 92
A2A6A4A3R12		RESISTOR, MIL TYPE RC07GF334J	5- 92
A2A6A4A3R13		SAME AS A2A6A1A2R9	5- 92
A2A6A4A3R14		SAME AS A2A6A1A1R13	5- 92
A2A6A4A3R15		SAME AS A2A6A2A2R8	5- 92
A2A6A4A3R16		RESISTOR, VARIABLE, 5K OHMS PORM 5 PCT, 1W, MFR 80294, P/N 3250W1-502	5- 92
A2A6A4A3R17		SAME AS A2A6A1A3R29	5- 92
A2A6A4A3R18		SAME AS A2A6A1A1R7	5- 92
A2A6A4A3R19		SAME AS A2A6A1A1R8	5- 92
A2A6A4A3R20		SAME AS A2A6A1A2R9	5- 92
A2A6A4A3R21-R22		SAME AS A2A6A2A5R15	5- 92
A2A6A4A3R23-R24		SAME AS A2A6A1A1R7	5- 92
A2A6A4A3R25		SAME AS A2A6A1A1R3	5- 92
A2A6A4A3R26		SAME AS A2A6A1A2R9	5- 92
A2A6A4A3R27		SAME AS A2A6A2A3R14	5- 92
A2A6A4A3R28		SAME AS A2A6A1A2R4	5- 92
A2A6A4A3R29		SAME AS A2A6A1A1R7	5- 92

TABLE 6-2. MAINTENANCE PARTS LIST (Continued)

RADIO RECEIVER R-1051/URR

REF DESIG	NOTES	NAME AND DESCRIPTION	FIG. NO.
A2A6A4A3R30		SAME AS A2A6A1A1R13	5- 92
A2A6A4A3R31		SAME AS A2A6A1A3R4	5- 92
A2A6A4A3RT1		SAME AS A2A6A1A1RT1	5- 92
A2A6A4A3T1		TRANSFORMER, AUDIO FREQUENCY, MFR 80223, P/N ER697	5- 92
A2A6A4A3TP1		NOT USED	
A2A6A4A3TP2		SAME AS A2A6A1A2TP3	5- 92
A2A6A5		SPECTRUM GENERATOR ASSEMBLY, MFR 58189, P/N 666230-652	5- 95
A2A6A5MP1-MP2		SCREW, EXTERNALLY RELIEVED BODY, MFR 58189, P/N 666163-233	5- 95
A2A6A5A1		SPECTRUM GENERATOR ASSEMBLY, 100 KC, PRINTED CIRCUIT BOARD W/ALL COMPONENTS ASSEMBLED FOR OPERATION, MFR 58189, P/N 666230-924	5- 96
A2A6A5A1C1		SAME AS A2A6A1C1	5- 96
A2A6A5A1C2		CAPACITOR, FIXED, ELECTROLYTIC, 15 UF PORM 20 PCT, 20 WVDC, MFR 56289, P/N 150D156X0020R2	5- 96
A2A6A5A1C3		SAME AS A2A6A1C1	5- 96
A2A6A5A1C4		CAPACITOR, FIXED, MICA DIELECTRIC, 5 UUF PORM 10 PCT, 500 WVDC, MFR 72136, P/N DM15C050K500V	5- 96
A2A6A5A1C5		CAPACITOR, FIXED, MICA DIELECTRIC, 20 UUF PORM 2 PCT, 300 WVDC, MFR 72136, P/N DM15E200G300V	5- 96
A2A6A5A1C6		CAPACITOR, FIXED, PLASTIC DIELECTRIC, 1800 UUF PORM 10 PCT, 100 WVDC, MFR 02777, P/N 1P1182K	5- 96
A2A6A5A1C7-C8		SAME AS A2A6A1C1	5- 96
A2A6A5A1C9		SAME AS A2A6A4A2C4	5- 96
A2A6A5A1C10		CAPACITOR, MIL TYPE CC64UH121G	5- 96
A2A6A5A1C11		SAME AS A2A6A3C26	5- 96
A2A6A5A1C12		SAME AS A2A6A4A2C4	5- 96
A2A6A5A1C13		SAME AS A2A6A4A3C19	5- 96
A2A6A5A1C14-C16		SAME AS A2A6A1C1	5- 96
A2A6A5A1C17		CAPACITOR, FIXED, MICA DIELECTRIC, 33 UUF PORM 2 PCT, 300 WVDC, MFR 72136, P/N DM15E330G300V	5- 96
A2A6A5A1C18		SAME AS A2A6A2A4C12	5- 96
A2A6A5A1C19		SAME AS A2A6A2A1C1	5- 96
A2A6A5A1CR1		SAME AS A2A6A1A3CR1	5- 96
A2A6A5A1CR2-CR3		SEMICONDUCTOR DEVICE, DIODE, MFR 80131, P/N 1N816	5- 96
A2A6A5A1CR4		SAME AS A2A6A1A1CR1-CR2	5- 96
A2A6A5A1E1		SAME AS A2A6MP3-MP5	5- 96
A2A6A5A1E2-E5		NOT USED	
A2A6A5A1E6		SAME AS A2A6MP2	5- 96
A2A6A5A1J1-J2		NOT USED	
A2A6A5A1J3		CONNECTOR, RECEPTACLE, ELECTRICAL, MFR 98291, P/N 51-043-4300	5- 96

TABLE 6-2. MAINTENANCE PARTS LIST (Continued)

RADIO RECEIVER R-1051/URR

REF DESIG	NOTES	NAME AND DESCRIPTION	FIG. NO.
A2A6A5A1J4-J5		NOT USED	
A2A6A5A1J6		SAME AS A2A6A5A1J3	5- 96
A2A6A5A1L1		SAME AS A2A6A1L1-L2	5- 96
A2A6A5A1L2		COIL, RADIO FREQUENCY, 250 KC, 0.620 IN. LG X 0.422 IN. DIA, MFR 58189, P/N 809000-422	5- 96
A2A6A5A1L3-L4		NOT USED	
A2A6A5A1L5		TRANSFORMER, VARIABLE, RADIO FREQUENCY, 7.9 MC, 0.620 IN. LG X 0.422 IN. DIA, MFR 58189, P/N 809000-237	5- 96
A2A6A5A1Q1		SAME AS A2A6A3A3Q12	5- 96
A2A6A5A1Q2		SAME AS A2A6A4A1Q4	5- 96
A2A6A5A1Q3		SAME AS A2A6A3A3Q12	5- 96
A2A6A5A1Q4		SAME AS A2A6A4A2Q1-Q9	5- 96
A2A6A5A1Q5-Q6		SAME AS A2A6A1A3Q4-Q5	5- 96
A2A6A5A1R1		SAME AS A2A6A2A3R10	5- 96
A2A6A5A1R2-R3		SAME AS A2A6A1A1R7	5- 96
A2A6A5A1R4		SAME AS A2A6A2A5R1	5- 96
A2A6A5A1R5		SAME AS A2A6A4A3R16	5- 96
A2A6A5A1R6		SAME AS A2A6A1A1R10	5- 96
A2A6A5A1R7-R8		SAME AS A2A6A1A1R13	5- 96
A2A6A5A1R9		RESISTOR, MIL TYPE RC07GF361J	5- 96
A2A6A5A1R10		SAME AS A2A6A3A4R31	5- 96
A2A6A5A1R11		SAME AS A2A6A1A1R13	5- 96
A2A6A5A1R12		SAME AS A2A6A1A1R10	5- 96
A2A6A5A1R13		SAME AS A2A6A1A3R14	5- 96
A2A6A5A1R14		SAME AS A2A6A2A2R2	5- 96
A2A6A5A1R15		SAME AS A2A6A1A1R7	5- 96
A2A6A5A1R16		SAME AS A2A6A1A1R15	5- 96
A2A6A5A1R17		SAME AS A2A6A1A1R8	5- 96
A2A6A5A1R18		SAME AS A2A6A1A1R13	5- 96
A2A6A5A1R19		SAME AS A2A6A1A1R8	5- 96
A2A6A5A1R20		SAME AS A2A6A1A1R13	5- 96
A2A6A5A1R21		SAME AS A2A6A1A1R7	5- 96
A2A6A5A1R22		SAME AS A2A6A1A1R11	5- 96
A2A6A5A1R23		SAME AS A2A6A1A2R5	5- 96
A2A6A5A1R24 SELECT		SAME AS A2A6A4A1R13	5- 96
A2A6A5A1R24 SELECT		SAME AS A2A6A1A3R9	5- 96
A2A6A5A1R24 SELECT		SAME AS A2A6A1A1R10	5- 96

TABLE 6-2. MAINTENANCE PARTS LIST (Continued)

RADIO RECEIVER R-1051/URR

REF DESIG	NOTES	NAME AND DESCRIPTION	FIG. NO.
A2A6A5A1R24 SELECT		SAME AS A2A6A1A1R15	5- 96
A2A6A5A1R24 SELECT		SAME AS A2A6A4A1R23	5- 96
A2A6A5A1R24 SELECT		SAME AS A2A6A4A1R11	5- 96
A2A6A5A1R24 SELECT		SAME AS A2A6A1A3R3	5- 96
A2A6A5A1R24 SELECT		SAME AS A2A6A1A2R9	5- 96
A2A6A5A1R24 SELECT		RESISTOR, MIL TYPE RC07GF432J	5- 96
A2A6A5A1R24 SELECT		SAME AS A2A6A1A1R7	5- 96
A2A6A5A1R24 SELECT		SAME AS A2A6A2A2R8	5- 96
A2A6A5A1R25		SAME AS A2A6A1A1R11	5- 96
A2A6A5A1T1		TRANSFORMER, RADIO FREQUENCY, 25 MC, 0.620 IN. LG X 0.422 IN. DIA, MFR 58189, P/N 809000-423	5- 96
A2A6A5A1T2		TRANSFORMER, VARIABLE, RADIO FREQUENCY, 7.9 MC, 0.620 IN. LG X 0.422 IN. DIA, MFR 58189, P/N 809000-236	5- 96
A2A6A5A1TP1-TP6		SAME AS A2A6A1A2TP1-TP2	5- 96
A2A6A5A2		SPECTRUM GENERATOR ASSEMBLY, 10 KC, PRINTED CIRCUIT BOARD W/ALL COMPONENTS ASSEMBLED FOR OPERATION, MFR 58189, P/N 666230-929	5- 97
A2A6A5A2C1		SAME AS A2A6A1C1	5- 97
A2A6A5A2C2		SAME AS A2A6A5A1C2	5- 97
A2A6A5A2C3-C5		SAME AS A2A6A1A1C17	5- 97
A2A6A5A2C6		SAME AS A2A6A1C1	5- 97
A2A6A5A2C7		SAME AS A2A6A1A3C8	5- 97
A2A6A5A2C8		SAME AS A2A6A5A1C5	5- 97
A2A6A5A2C9		CAPACITOR, FIXED, PLASTIC DIELECTRIC, 0.033 UF PORM 10 PCT, 100 WVDC, MFR 02777, P/N 1P1333K	5- 97
A2A6A5A2C10		SAME AS A2A6A1C1	5- 97
A2A6A5A2C11		SAME AS A2A6A1A2C10	5- 97
A2A6A5A2C12		CAPACITOR, FIXED, ELECTROLYTIC, 3.3 UF PORM 20 PCT, 35 WVDC, MFR 56289, P/N 150D335X0035B2	5- 97
A2A6A5A2C13		SAME AS A2A6A1C1	5- 97
A2A6A5A2C14		SAME AS A2A6A1A1C9	5- 97
A2A6A5A2C15		CAPACITOR, FIXED, CERAMIC DIELECTRIC, 100 UUF PORM 5 PCT, 75 WVDC, MFR 86335, P/N MINU100J	5- 97
A2A6A5A2C16		SAME AS A2A6A1A2C13	5- 97
A2A6A5A2CR1		SAME AS A2A6A1A3CR1	5- 97
A2A6A5A2CR2-CR3		SAME AS A2A6A1A2CR1	5- 97
A2A6A5A2CR4		SAME AS A2A6A5A1CR2-CR3	5- 97
A2A6A5A2E1-E2		SAME AS A2A6MP3-MP5	5- 97
A2A6A5A2E3-E4		SAME AS A2A6MP2	5- 97
A2A6A5A2J1-J4		NOT USED	

TABLE 6-2. MAINTENANCE PARTS LIST (Continued)

RADIO RECEIVER R-1051/URR

REF DESIG	NOTES	NAME AND DESCRIPTION	FIG. NO.
A2A6A5A2J5		SAME AS A2A6A5A1J3	5- 97
A2A6A5A2L1		SAME AS A2A6A1L1-L2	5- 97
A2A6A5A2Q1-Q2		SAME AS A2A6A3A3Q12	5- 97
A2A6A5A2Q3		SAME AS A2A6A4A1Q4	5- 97
A2A6A5A2Q4-Q5		SAME AS A2A6A3A3Q12	5- 97
A2A6A5A2Q6		SAME AS A2A6A1A3Q4-Q5	5- 97
A2A6A5A2R1		SAME AS A2A6A1A3R1	5- 97
A2A6A5A2R2		SAME AS A2A6A1A1R17	5- 97
A2A6A5A2R3		SAME AS A2A6A2A5R1	5- 97
A2A6A5A2R4		SAME AS A2A6A1A1R13	5- 97
A2A6A5A2R5		SAME AS A2A6A1A1R10	5- 97
A2A6A5A2R6		SAME AS A2A6A1A1R13	5- 97
A2A6A5A2R7		SAME AS A2A6A2A5R1	5- 97
A2A6A5A2R8		SAME AS A2A6A1A1R13	5- 97
A2A6A5A2R9		SAME AS A2A6A1A1R10	5- 97
A2A6A5A2R10		NOT USED	
A2A6A5A2R11		SAME AS A2A6A4A3R16	5- 97
A2A6A5A2R12		SAME AS A2A6A4A1R11	5- 97
A2A6A5A2R13		SAME AS A2A6A1A1R13	5- 97
A2A6A5A2R14		SAME AS A2A6A5A1R9	5- 97
A2A6A5A2R15		SAME AS A2A6A3A4R31	5- 97
A2A6A5A2R16		SAME AS A2A6A1A1R10	5- 97
A2A6A5A2R17		NOT USED	
A2A6A5A2R18-R19		SAME AS A2A6A1A1R13	5- 97
A2A6A5A2R20		SAME AS A2A6A1A3R14	5- 97
A2A6A5A2R21		SAME AS A2A6A2A5R1	5- 97
A2A6A5A2R22		SAME AS A2A6A1A1R10	5- 97
A2A6A5A2R23		SAME AS A2A6A1A3R9	5- 97
A2A6A5A2R24 SELECT		SAME AS A2A6A1A3R3	5- 97
A2A6A5A2R24 SELECT		SAME AS A2A6A4A1R13	5- 97
A2A6A5A2R24 SELECT		SAME AS A2A6A1A3R9	5- 97
A2A6A5A2R24 SELECT		SAME AS A2A6A1A1R10	5- 97
A2A6A5A2R24 SELECT		SAME AS A2A6A1A1R15	5- 97
A2A6A5A2R24 SELECT		SAME AS A2A6A4A1R23	5- 97
A2A6A5A2R24 SELECT		SAME AS A2A6A4A1R11	5- 97
A2A6A5A2R24 SELECT		SAME AS A2A6A1A2R9	5- 97

TABLE 6-2. MAINTENANCE PARTS LIST (Continued)

RADIO RECEIVER R-1051/URR

REF DESIG	NOTES	NAME AND DESCRIPTION	FIG. NO.
A2A6A5A2R24 SELECT		RESISTOR, MIL TYPE RC07GF432J	5- 97
A2A6A5A2R24 SELECT		SAME AS A2A6A1A1R7	5- 97
A2A6A5A2R24 SELECT		SAME AS A2A6A2A2R8	5- 97
A2A6A5A2R24 SELECT		SAME AS A2A6A2A2R2	5- 97
A2A6A5A2R24 SELECT		SAME AS A2A6A1A3R4	5- 97
A2A6A5A2R24 SELECT		SAME AS A2A6A2A5R1	5- 97
A2A6A5A2R24 SELECT		RESISTOR, MIL TYPE RC07GF752J	5- 97
A2A6A5A2R24 SELECT		SAME AS A2A6A1A3R6	5- 97
A2A6A5A2R25		SAME AS A2A6A1A3R9	5- 97
A2A6A5A2R26		SAME AS A2A6A1A1R8	5- 97
A2A6A5A2R27		SAME AS A2A6A1A1R13	5- 97
A2A6A5A2R28-R29		SAME AS A2A6A3A1R7	5- 97
A2A6A5A2R30 SELECT		SAME AS A2A6A1A1R9	5- 97
A2A6A5A2R30 SELECT		SAME AS A2A6A2A1R8	5- 97
A2A6A5A2R30 SELECT		SAME AS A2A6A2A5R17	5- 97
A2A6A5A2R30 SELECT		SAME AS A2A6A1A3R20	5- 97
A2A6A5A2R30 SELECT		SAME AS A2A6A1A3R15	5- 97
A2A6A5A2R30 SELECT		SAME AS A2A6A1A1R18	5- 97
A2A6A5A2T1		TRANSFORMER, RADIO FREQUENCY, 7.90 MC, 0.620 IN. LG X 0.422 IN. DIA, MFR 58189, P/N 809000-379	5- 97
A2A6A5A2TP1-TP6		SAME AS A2A6A1A2TP1-TP2	5- 97
A2A6A5A2XQ1-XQ2		SAME AS A2A6A3A3XQ12	5- 97
A2A6A5A2XQ3		NOT USED	
A2A6A5A2XQ4-XQ5		SAME AS A2A6A3A3XQ12	5- 97
A2A6A5A3		SPECTRUM GENERATOR ASSEMBLY, 1 KC, PRINTED CIRCUIT BOARD W/ALL COMPONENTS ASSEMBLED FOR OPERATION, MFR 58189, P/N 666230-934	5- 98
A2A6A5A3C1		SAME AS A2A6A1C2	5- 98
A2A6A5A3C2		SAME AS A2A6A5A1C2	5- 98
A2A6A5A3C3-C5		SAME AS A2A6A1A1C17	5- 98
3A2A6A5A3C6		SAME AS A2A6A1C1	5- 98
3A2A6A5A3C7		SAME AS A2A6A1A3C8	5- 98
A2A6A5A3C8		SAME AS A2A6A5A1C5	5- 98
A2A6A5A3C9		CAPACITOR, FIXED, PLASTIC DIELECTRIC, 0.33 UF PORM 10 PCT, 100 WVDC, MFR 02777, P/N P331PFK	5- 98
A2A6A5A3C10		SAME AS A2A6A1C1	5- 98
A2A6A5A3C11		SAME AS A2A6A1A2C10	5- 98
A2A6A5A3C12		SAME AS A2A6A5A2C12	5- 98

TABLE 6-2. MAINTENANCE PARTS LIST (Continued)

RADIO RECEIVER R-1051/URR

REF DESIG	NOTES	NAME AND DESCRIPTION	FIG. NO.
A2A6A5A3C13		SAME AS A2A6A3C26	5- 98
A2A6A5A3C14		CAPACITOR, MIL TYPE CM06F162G03	5- 98
A2A6A5A3C15		SAME AS A2A6A2A3C2-C3	5- 98
A2A6A5A3C16		SAME AS A2A6A3C26	5- 98
A2A6A5A3C17		CAPACITOR, FIXED, METALIZED PAPER DIELECTRIC, 0.005 UF PORM 20 PCT, 200 WVDC, MFR 02777, P/N T2900-3	5- 98
A2A6A5A3CR1		SAME AS A2A6A1A3CR1	5- 98
A2A6A5A3CR2-CR3		SAME AS A2A6A1A2CR1	5- 98
A2A6A5A3CR4		SAME AS A2A6A1A1CR1-CR2	5- 98
A2A6A5A3CR5		SAME AS A2A6A5A1CR2-CR3	5- 98
A2A6A5A3E1-E2		SAME AS A2A6MP3-MP5	5- 98
A2A6A5A3E3-E4		SAME AS A2A6MP2	5- 98
A2A6A5A3J1		NOT USED	
A2A6A5A3J2		PROD, TEST, MFR 98291, P/N RFTM14RED	5- 98
A2A6A5A3J3		NOT USED	
A2A6A5A3J4		SAME AS A2A6A5A1J3	5- 98
A2A6A5A3L1		SAME AS A2A6A1L1-L2	5- 98
A2A6A5A3L2		COIL, MIL TYPE MS75008-45	5- 98
A2A6A5A3Q1-Q2		SAME AS A2A6A3A3Q12	5- 98
A2A6A5A3Q3		SAME AS A2A6A4A1Q4	5- 98
A2A6A5A3Q4-Q5		SAME AS A2A6A3A3Q12	5- 98
A2A6A5A3Q6		SAME AS A2A6A1A3Q4-Q5	5- 98
A2A6A5A3R1		SAME AS A2A6A1A3R1	5- 98
A2A6A5A3R2		SAME AS A2A6A1A1R17	5- 98
A2A6A5A3R3		SAME AS A2A6A2A5R1	5- 98
A2A6A5A3R4		SAME AS A2A6A1A1R13	5- 98
A2A6A5A3R5		SAME AS A2A6A1A1R10	5- 98
A2A6A5A3R6		SAME AS A2A6A1A1R13	5- 98
A2A6A5A3R7		SAME AS A2A6A2A5R1	5- 98
A2A6A5A3R8		SAME AS A2A6A1A1R13	5- 98
A2A6A5A3R9		SAME AS A2A6A1A3R10	5- 98
A2A6A5A3R10		SAME AS A2A6A3A1R4	5- 98
A2A6A5A3R11		SAME AS A2A6A4A3R16	5- 98
A2A6A5A3R12		SAME AS A2A6A1A1R7	5- 98
A2A6A5A3R13		SAME AS A2A6A1A1R13	5- 98
A2A6A5A3R14		SAME AS A2A6A5A1R9	5- 98

TABLE 6-2. MAINTENANCE PARTS LIST (Continued)

RADIO RECEIVER R-1051/URR

REF DESIG	NOTES	NAME AND DESCRIPTION	FIG. NO.
A2A6A5A3R15		SAME AS A2A6A3A4R31	5- 98
A2A6A5A3R16		SAME AS A2A6A1A1R10	5- 98
A2A6A5A3R17		SAME AS A2A6A1A1R17	5- 98
A2A6A5A3R18-R19		SAME AS A2A6A1A1R13	5- 98
A2A6A5A3R20		SAME AS A2A6A1A3R14	5- 98
A2A6A5A3R21		SAME AS A2A6A2A2R2	5- 98
A2A6A5A3R22		SAME AS A2A6A1A1R10	5- 98
A2A6A5A3R23		SAME AS A2A6A1A3R9	5- 98
A2A6A5A3R24 SELECT		SAME AS A2A6A1A3R3	5- 98
A2A6A5A3R24 SELECT		SAME AS A2A6A4A1R13	5- 98
A2A6A5A3R24 SELECT		SAME AS A2A6A1A3R9	5- 98
A2A6A5A3R24 SELECT		SAME AS A2A6A1A1R10	5- 98
A2A6A5A3R24 SELECT		SAME AS A2A6A1A1R15	5- 98
A2A6A5A3R24 SELECT		SAME AS A2A6A4A1R23	5- 98
A2A6A5A3R24 SELECT		SAME AS A2A6A4A1R11	5- 98
A2A6A5A3R24 SELECT		SAME AS A2A6A1A2R9	5- 98
A2A6A5A3R24 SELECT		RESISTOR, MIL TYPE RC07GF432J	5- 98
A2A6A5A3R24 SELECT		SAME AS A2A6A1A1R7	5- 98
A2A6A5A3R24 SELECT		SAME AS A2A6A2A2R8	5- 98
A2A6A5A3R24 SELECT		SAME AS A2A6A2A2R2	5- 98
A2A6A5A3R24 SELECT		SAME AS A2A6A1A3R4	5- 98
A2A6A5A3R24 SELECT		SAME AS A2A6A2A5R1	5- 98
A2A6A5A3R24 SELECT		RESISTOR, MIL TYPE RC07GF752J	5- 98
A2A6A5A3R24 SELECT		SAME AS A2A6A1A3R6	5- 98
A2A6A5A3R25		SAME AS A2A6A1A1R15	5- 98
A2A6A5A3R26		SAME AS A2A6A1A1R8	5- 98
A2A6A5A3R27		SAME AS A2A6A1A1R13	5- 98
A2A6A5A3T1		COIL, RADIO FREQUENCY, 1000 UH, MFR 58189, P/N 809000-432	5- 98
A2A6A5A3TP1-TP6		SAME AS A2A6A1A2TP1-TP2	5- 98
A2A6A5A3XQ1-XQ2		SAME AS A2A6A3A3XQ12	5- 98
A2A6A5A3XQ3		NOT USED	
A2A6A5A3XQ4-XQ5		SAME AS A2A6A3A3XQ12	5- 98
A2A6A5A4		SPECTRUM GENERATOR ASSEMBLY, 5 KC, PRINTED CIRCUIT BOARD W/ALL COMPONENTS ASSEMBLED FOR OPERATION, MFR 58189, P/N 666230-939	5- 99
A2A6A5A4C1-C3		SAME AS A2A6A1A2C10	5- 99
A2A6A5A4C4		SAME AS A2A6A1C2	5- 99

TABLE 6-2. MAINTENANCE PARTS LIST (Continued)

RADIO RECEIVER R-1051/URR

REF DESIG	NOTES	NAME AND DESCRIPTION	FIG. NO.
A2A6A5A4C5-C6		SAME AS A2A6A1A2C10	5- 99
A2A6A5A4C7		CAPACITOR, MIL TYPE CM06D222G03	5- 99
A2A6A5A4E1		SAME AS A2A6MP2	5- 99
A2A6A5A4E2		SAME AS A2A6MP3-MP5	5- 99
A2A6A5A4J1		SAME AS A2A6A5A1J3	5- 99
A2A6A5A4L1		SAME AS A2A6A1L1-L2	5- 99
A2A6A5A4Q1		SAME AS A2A6A1A3Q4-Q5	5- 99
A2A6A5A4Q2		SAME AS A2A6A3A3Q12	5- 99
A2A6A5A4Q3		SAME AS A2A6A1A3Q4-Q5	5- 99
A2A6A5A4R1		SAME AS A2A6A1A1R8	5- 99
A2A6A5A4R2		SAME AS A2A6A1A1R13	5- 99
A2A6A5A4R3		SAME AS A2A6A2A2R2	5- 99
A2A6A5A4R4		RESISTOR, MIL TYPE RC07GF362J	5- 99
A2A6A5A4R5		SAME AS A2A6A1A3R14	5- 99
A2A6A5A4R6		SAME AS A2A6A2A3R14	5- 99
A2A6A5A4R7		SAME AS A2A6A1A1R13	5- 99
A2A6A5A4R8		SAME AS A2A6A1A1R10	5- 99
A2A6A5A4R9		SAME AS A2A6A1A1R15	5- 99
A2A6A5A4R10		SAME AS A2A6A1A3R9	5- 99
A2A6A5A4R11 SELECT		SAME AS A2A6A1A3R3	5- 99
A2A6A5A4R11 SELECT		SAME AS A2A6A4A1R13	5- 99
A2A6A5A4R11 SELECT		SAME AS A2A6A1A3R9	5- 99
A2A6A5A4R11 SELECT		SAME AS A2A6A1A1R10	5- 99
A2A6A5A4R11 SELECT		SAME AS A2A6A1A1R15	5- 99
A2A6A5A4R11 SELECT		SAME AS A2A6A4A1R23	5- 99
A2A6A5A4R11 SELECT		SAME AS A2A6A4A1R11	5- 99
A2A6A5A4R11 SELECT		SAME AS A2A6A1A2R9	5- 99
A2A6A5A4R11 SELECT		RESISTOR, MIL TYPE RC07GF432J	5- 99
A2A6A5A4R11 SELECT		SAME AS A2A6A1A1R7	5- 99
A2A6A5A4R11 SELECT		SAME AS A2A6A2A2R8	5- 99
A2A6A5A4R11 SELECT		SAME AS A2A6A2A2R2	5- 99
A2A6A5A4R11 SELECT		RESISTOR, MIL TYPE RC07GF662J	5- 99
A2A6A5A4R11 SELECT		SAME AS A2A6A2A5R1	5- 99
A2A6A5A4R11 SELECT		RESISTOR, MIL TYPE RC07GF752J	5- 99
A2A6A5A4R11 SELECT		SAME AS A2A6A1A3R6	5- 99
A2A6A5A4R12		SAME AS A2A6A1A1R8	5- 99

TABLE 6-2. MAINTENANCE PARTS LIST (Continued)

RADIO RECEIVER R-1051/URR

REF DESIG	NOTES	NAME AND DESCRIPTION	FIG. NO.
A2A6A5A4R13		SAME AS A2A6A1A1R13	5- 99
A2A6A5A4T1		SAME AS A2A6A5A3T1	5- 99
A2A6A5A4TP1-TP5		SAME AS A2A6A1A2TP1-TP2	5- 99
A2A6A5A4XQ1		NOT USED	
A2A6A5A4XQ2		SAME AS A2A6A3A3XQ12	5- 99
A2A6A6		TRANSLATOR ASSEMBLY, MFR 58189, P/N 666230-660	5-100
A2A6A6MP1-MP2		SAME AS A2A6A5MP1-MP2	5-100
A2A6A6A1		TRANSLATOR, PRINTED CIRCUIT BOARD W/ALL COMPONENTS ASSEMBLED FOR OPERATION, MFR 58189, P/N 666230-944	5-101
A2A6A6A1C1		~~SAME AS A2A6A3C26~~ CAP. .05 uf P/m 20% 100V MFR 00656 Type V146ZP 2031150-0701	5-101
A2A6A6A1C2-C6		SAME AS A2A6A1C1	5-101
A2A6A6A1C7		SAME AS ~~A2A6A3C26~~ A2A6A6A1C1	5-101
A2A6A6A1C8		SAME AS A2A6A1A1C2	5-101
A2A6A6A1C9-C19		SAME AS A2A6A1C1	5-101
A2A6A6A1C20		SAME AS A2A6A3A4C8	5-101
A2A6A6A1C21-C23		SAME AS A2A6A1C1	5-101
A2A6A6A1C24-C25		SAME AS ~~A2A6A3C26~~ A2A6A6A1C1	5-101
A2A6A6A1C26-C27		SAME AS A2A6A1C1	5-101
A2A6A6A1C28-C29		SAME AS A2A6A3C26 A2A6A6A1C1	5-101
A2A6A6A1C30-C31		SAME AS A2A6A1C1	5-101
A2A6A6A1C32		CAPACITOR, MIL TYPE CM06F152G03	5-101
A2A6A6A1C33		CAPACITOR, FIXED, ELECTROLYTIC, 15 UF PORM 20 PCT, 35 WVDC, MFR 56289, P/N 150D156X0035R2	5-101
A2A6A6A1C34-C35		SAME AS A2A6A1C1	5-101
A2A6A6A1C36		SAME AS A2A6A6A1C33	5-101
A2A6A6A1C37-C43		SAME AS A2A6A1C1	5-101
A2A6A6A1C44		NOT USED	
A2A6A6A1C45-46		SAME AS A2A6A1C1	5-101
A2A6A6A1CR1-CR8		SEMICONDUCTOR DEVICE, DIODE, MIL TYPE 1N270	5-101
A2A6A6A1CR9-CR10		SAME AS A2A6A1A1CR1-CR2	5-101
A2A6A6A1CR11		SAME AS A2A6A1A3CR1	5-101
A2A6A6A1FL1		FILTER, BAND PASS, 20 MC, MFR 19057, P/N 7652000	5-101
A2A6A6A1FL2		FILTER, BAND PASS, 30 MC, MFR 19057, P/N 7653000	5-101
A2A6A6A1FL3		FILTER, BAND PASS, 2.85 MC, MFR 19057, P/N 765208	5-101
A2A6A6A1J1-J3		SAME AS A2A6A5A1J3	5-101
A2A6A6A1J4		JACK, TIP, MFR 98291, P/N RFTM14GREEN	5-101
A2A6A6A1J5		PROD, TEST, MFR 98291, P/N RFTM14GRAY	5-101

TABLE 6-2. MAINTENANCE PARTS LIST (Continued)

RADIO RECEIVER R-1051/URR

REF DESIG	NOTES	NAME AND DESCRIPTION	FIG. NO.
A2A6A6A1J6		SAME AS A2A6A5A3J2	5-101
A2A6A6A1J7		PROD, TEST, MFR 98291, P/N RFTM14ORANGE	5-101
A2A6A6A1L1		SAME AS A2A6A1L1-L2	5-101
A2A6A6A1L2-L3		SAME AS A2A6A1A1L2-L3	5-101
A2A6A6A1L4-L8		SAME AS A2A6A1L1-L2	5-101
A2A6A6A1L9		COIL, RADIO FREQUENCY, 190 MC, MFR 82142, P/N 4411-10K	5-101
A2A6A6A1MP1-MP5		SAME AS A2A6MP7-MP9	5-101
A2A6A6A1Q1		SAME AS A2A6A4A1Q2-Q3	5-101
A2A6A6A1Q2-Q6		SAME AS A2A6A1A3Q4-Q5	5-101
A2A6A6A1Q7-Q9		SAME AS A2A6A4A1Q2-Q3	5-101
A2A6A6A1R1		SAME AS A2A6A1A3R9	5-101
A2A6A6A1R2		SAME AS A2A6A1A1R7	5-101
A2A6A6A1R3		RESISTOR, MIL TYPE RC07GF301J	5-101
A2A6A6A1R4		RESISTOR, VARIABLE, 100 OHMS PORM 20 PCT, 1/4W, MFR 01121, P/N FM101M	5-101
A2A6A6A1R5		SAME AS A2A6A3A1R2	5-101
A2A6A6A1R6		SAME AS A2A6A1A1R18	5-101
A2A6A6A1R7		SAME AS A2A6A2A3R14	5-101
A2A6A6A1R8	SELECT	SAME AS A2A6A1A1R9	5-101
A2A6A6A1R8	SELECT	RESISTOR, MIL TYPE RC07GF220J	5-101
A2A6A6A1R9		SAME AS A2A6A4A1R11	5-101
A2A6A6A1R10		SAME AS A2A6A1A1R18	5-101
A2A6A6A1R11		SAME AS A2A6A1A1R8	5-101
A2A6A6A1R12		SAME AS A2A6A1A3R9	5-101
A2A6A6A1R13		SAME AS A2A6A4A1R11	5-101
A2A6A6A1R14		SAME AS A2A6A1A1R18	5-101
A2A6A6A1R15		SAME AS A2A6A1A1R8	5-101
A2A6A6A1R16		SAME AS A2A6A1A3R9	5-101
A2A6A6A1R17		SAME AS A2A6A4A1R11	5-101
A2A6A6A1R18		SAME AS A2A6A1A2R13	5-101
A2A6A6A1R19		SAME AS A2A6A3A1R2	5-101
A2A6A6A1R20		SAME AS A2A6A1A1R18	5-101
A2A6A6A1R21		SAME AS A2A6A2A3R14	5-101
A2A6A6A1R22		SAME AS A2A6A2A1R8	5-101
A2A6A6A1R23		SAME AS A2A6A1A1R8	5-101
A2A6A6A1R24		SAME AS A2A6A4A1R11	5-101
A2A6A6A1R25		SAME AS A2A6A1A1R18	5-101

TABLE 6-2. MAINTENANCE PARTS LIST (Continued)

RADIO RECEIVER R-1051/URR

REF DESIG	NOTES	NAME AND DESCRIPTION	FIG. NO.
A2A6A6A1R26		SAME AS A2A6A1A3R9	5-101
A2A6A6A1R27		RESISTOR, MIL TYPE RC20GF751J	5-101
A2A6A6A1R28		SAME AS A2A6A1A2R13	5-101
A2A6A6A1R29		SAME AS A2A6A1A1R13	5-101
A2A6A6A1R30		SAME AS A2A6A1A1R9	5-101
A2A6A6A1R31		SAME AS A2A6A1A1R7	5-101
A2A6A6A1R32		SAME AS A2A6A1A1R8	5-101
A2A6A6A1R33		SAME AS A2A6A1A1R7	5-101
A2A6A6A1R34		SAME AS A2A6A3A1R2	5-101
A2A6A6A1R35		SAME AS A2A6A1A2R13	5-101
A2A6A6A1R36		SAME AS A2A6A4A1R11	5-101
A2A6A6A1R37		SAME AS A2A6A1A1R18	5-101
A2A6A6A1R38	SELECT	RESISTOR, MIL TYPE RC07GF2R7J	5-101
A2A6A6A1R38	SELECT	RESISTOR, MIL TYPE RC07GF3R6J	5-101
A2A6A6A1R38	SELECT	SAME AS A2A6A3A1R7	5-101
A2A6A6A1R38	SELECT	SAME AS A2A6A1A1R9	5-101
A2A6A6A1R38	SELECT	SAME AS A2A6A2A1R8	5-101
A2A6A6A1R38	SELECT	SAME AS A2A6A2A5R17	5-101
A2A6A6A1R38	SELECT	SAME AS A2A6A1A3R20	5-101
A2A6A6A1R38	SELECT	SAME AS A2A6A1A1R18	5-101
A2A6A6A1R39		SAME AS A2A6A2A3R14	5-101
A2A6A6A1R40		SAME AS A2A6A1A1R7	5-101
A2A6A6A1R41		SAME AS A2A6A1A2R13	5-101
A2A6A6A1R42		RESISTOR, MIL TYPE RC07GF113J	5-101
A2A6A6A1R43		SAME AS A2A6A1A2R9	5-101
A2A6A6A1R44		SAME AS A2A6A1A1R18	5-101
A2A6A6A1R45		SAME AS A2A6A2A3R14	5-101
A2A6A6A1R46		SAME AS A2A6A1A1R9	5-101
A2A6A6A1R47-R51		SAME AS A2A6A1A1R7	5-101
A2A6A6A1R52-R53		SAME AS A2A6A1A2R4	5-101
A2A6A6A1R54		SAME AS A2A6A4A1R11	5-101
A2A6A6A1R55-R56		SAME AS A2A6A1A2R4	5-101
A2A6A6A1T1		TRANSFORMER, RADIO FREQUENCY, 2.50 MC, 0.620 IN. LG X 0.422 IN. DIA, MFR 58189, P/N 809000-381	5-101
A2A6A6A1TP1-TP4		SAME AS A2A6A1A2TP1-TP2	5-101
A2A6A6A1TP5		JACK, TIP, MFR 74970, P/N 105-757	5-101

TABLE 6-2. MAINTENANCE PARTS LIST (Continued)

RADIO RECEIVER R-1051/URR

REF DESIG	NOTES	NAME AND DESCRIPTION	FIG. NO.
A2A6A6A1TP6		JACK, TIP, MFR 74970, P/N 105-756	5-101
A2A6A6A1TP7		JACK, TIP, MFR 74970, P/N 105-752	5-101
A2A6A6A1TP8		JACK, TIP, MFR 74970, P/N 105-751	5-101
A2A6A6A1XQ1		SAME AS A2A6A3A3XQ12	5-101
A2A6A6A1XQ2-XQ6		NOT USED	
A2A6A6A1XQ7-XQ9		SAME AS A2A6A3A3XQ12	5-101
A2A7		CODE GENERATOR, MFR 58189, P/N 666230-794	5-102
A2A8		POWER SUPPLY, PRINTED CIRCUIT BOARD, W/ALL COMPONENTS ASSEMBLED FOR OPERATION, MFR 58189, P/N 666230-733	5- 19
A2A8C1-C2		NOT USED	
A2A8C3-C4		CAPACITOR, FIXED, ELECTROLYTIC, 35 UF PLUS 50 PCT MINUS 15 PCT, 60 WVDC, MFR 02859, P/N T0103	5- 19
A2A8C5		NOT USED	
A2A8C6		CAPACITOR, FIXED, ELECTROLYTIC, 15 UF PORM 20 PCT, 35 WVDC, MFR 56289, P/N 150D156X0035R2	5- 19
A2A8C7		CAPACITOR, FIXED, ELECTROLYTIC, 120 UF PLUS 75 PCT MINUS 15 PCT, 40 WVDC, MFR 02859, P/N T0314	5- 19
A2A8CR1-CR4		SEMICONDUCTOR DEVICE, DIODE, MFR 80131, P/N 1N649	5- 19
A2A8CR5-CR8		SEMICONDUCTOR DEVICE, DIODE, MFR 80131, P/N 1N3612	5- 19
A2A8CR9-CR12		SEMICONDUCTOR DEVICE, DIODE, MIL TYPE 1N270	5- 19
A2A8CR13-CR14		SEMICONDUCTOR DEVICE, DIODE, MFR 80131, P/N 1N3024B	5- 19
A2A8CR15		SAME AS A2A8CR9-CR12	5- 19
A2A8CR16		SEMICONDUCTOR DEVICE, DIODE, MFR 80131, P/N 1N963B	5- 19
A2A8CR17		SEMICONDUCTOR DEVICE, DIODE, MFR 80131, P/N 1N750A	5- 19
A2A8Q1		TRANSISTOR, MIL TYPE 2N1131	5- 19
A2A8Q2-Q4		TRANSISTOR, MFR 80131, P/N 2N697	5- 19
A2A8R1-R2		RESISTOR, MIL TYPE RC32GF470J	5- 19
A2A8R3		RESISTOR, MIL TYPE RC07GF101J	5- 19
A2A8R4		RESISTOR, MIL TYPE RC20GF102J	5- 19
A2A8R5		RESISTOR, MIL TYPE RC20GF470J	5- 19
A2A8R6		RESISTOR, MIL TYPE RC07GF302J	5- 19
A2A8R7		RESISTOR, MIL TYPE RC07GF472J	5- 19
A2A8R8		RESISTOR, MIL TYPE RC07GF821J	5- 19
A2A8R9		RESISTOR, MIL TYPE RC07GF681J	5- 19
A2A8R10-R11		SAME AS A2A8R7	5- 19
A2A8R12		RESISTOR, MIL TYPE RC07GF102J	5- 19
A2A8R13		RESISTOR, MIL TYPE RC07GF152J	5- 19
A2A8R14		RESISTOR, VARIABLE, 500 OHMS PORM 5 PCT, 1W, MFR 80294, P/N 224P1-501	5- 19

TABLE 6-2. MAINTENANCE PARTS LIST (Continued)

RADIO RECEIVER R-1051/URR

REF DESIG	NOTES	NAME AND DESCRIPTION	FIG. NO.
A2A8R15		RESISTOR, MIL TYPE RC07GF331J	5- 19
2A8XQ1-XQ4		MOUNTING PAD, TRANSISTOR, 0.344 IN. DIA X 0.075 IN. THK, MFR 07047,	5- 19
A2A9		ANTENNA CUTOUT, PRINTED CIRCUIT BOARD, W/ALL COMPONENTS ASSEMBLED FOR OPERATION, MFR 58189, P/N 666231-698	5- 21
A2A9C1		CAPACITOR, FIXED, METALIZED PAPER DIELECTRIC, 0.01 UF PORM 20 PCT, 200 WVDC, MFR 02777, P/N T2900-2	5- 21
A2A9C2		CAPACITOR, MIL TYPE CC20CH050C	5- 21
A2A9C3		CAPACITOR, FIXED, CERAMIC DIELECTRIC, 0.01 UF, PORM 20 PCT, 75 WVDC, MFR 86335, P/N SSM01-88	5- 21
A2A9C4		CAPACITOR, FIXED, ELECTROLYTIC, 22 UF PORM 20 PCT, 15WVDC, MFR 56289, P/N 150D226X0015A2	5- 21
A2A9C5		CAPACITOR, FIXED, CERAMIC DIELECTRIC, 0.1 UF PLUS 100 PCT MINUS 20 PCT, 75 WVDC, MFR 86335, P/N K60C00.1Z	5- 21
A2A9CR1		SEMICONDUCTOR DEVICE, DIODE, MIL TYPE 1N270	5- 21
A2A9K1		RELAY, ARMATURE, 0.790 IN. LG X 0.650 IN. W X 3.875 IN. H, MFR 02289, P/N 2F2429	5- 21
A2A9Q1		TRANSISTOR, MFR 80131, P/N 2N652	5- 21
A2A9R1		RESISTOR, MIL TYPE RC20GF682J	5- 21
A2A9R2		RESISTOR, MIL TYPE RC20GF821J	5- 21
A2A9R3		RESISTOR, MIL TYPE RC07GF392J	5- 21
A2A9R4		RESISTOR, MIL TYPE RC32GF182J	5- 21
A2A9R5		RESISTOR, MIL TYPE RC20GF330J	5- 21
A2A9XQ1		MOUNTING PAD, TRANSISTOR, 0.344 IN. DIA X 0.075 IN. THK, MFR 07047, P/N 10012	5- 21
A2A10		PANEL SUBASSEMBLY, LIGHT, MFR 58189, P/N 666230-235	5- 15
A2A10DS1-DS2		SAME AS A1J1-J22	
A2A10DS3-DS4		SAME AS A2A10	5- 15
A2A11		500 CPS CONTROL, PRINTED CIRCUIT BOARD, W/ALL COMPONENTS ASSEMBLED FOR OPERATION, MFR 58189, P/N 666230-443	5- 20
A2A11C1		CAPACITOR, FIXED, METALIZED PAPER DIELECTRIC, 0.2 UF PORM 20 PCT, 200 WVDC, MFR 02777, P/N T2900-5	5- 20
A2A11R1		RESISTOR, MIL TYPE RT22C2P103	5- 20
A2A11R2		RESISTOR, FIXED, WIREWOUND, 10K OHMS PORM 3 PCT, 1W, MFR 91637, P/N RS1A103H	5- 20
A2A11R3		RESISTOR, MIL TYPE RT22C2P202	5- 20
A2A11R4		RESISTOR, FIXED, WIREWOUND, 5.6K OHMS PORM 3 PCT, 1W, MFR 91637, P/N RS1A562H	5- 20
A2A11R5		RESISTOR, FIXED, WIREWOUND, 1.4K OHMS PORM 1 PCT, MFR 91637, P/N RS1A142F	5- 20
A2A11R6		RESISTOR, MIL TYPE RC20GF475J	5- 20
A2A11R7		RESISTOR, MIL TYPE RC20GF203J	5- 20

TABLE 6-2. LIST OF MANUFACTURERS

MFG CODE NUMBER	NAME	ADDRESS
00144	Magnetic Controls Company	Mineapolis, Minnesota
00656	Aerovox Corporation	New Bedford, Mass.
02289	HI-G, Incorporated	Windsor Locks, Conn.
03550	Vanguard Electronics Company	Inglewood, Calif.
04713	Motorola Semiconductor Products, Inc.	Phoenix, Ariz. 85008
06845	Bendix Corporation, Communications Division	Baltimore, Md. 21204
07263	Fairchild Camera and Instrument Corp. Semiconductor Division	Mountain View, Calif.
12954	Dickson Electronics Corp.	Scottsdale, Ariz.
14844	Frequency Electronics, Inc.	New Hyde Park, N. Y. 10043
16157	Dynamic Components Corp.	Batavia, New York
17637	Universal Toroid Coil Winding Corp.	Irvington, N. J.
18736	Voltronics Corp.	Hanover, N. J. 07936
19057	Filtech Corp.	Franklin Park, Ill.
22238	MI-KRO Connector Corp.	Long Island City, N. Y.
24455	General Electric	Bloomfield, N. J.
56289	Sprague Electric Co.	North Adams, Mass.
58189	General Dynamics Corp. Electronics Division	Rochester, N. Y.
58854	Sylvania Electric Products, Inc. Lighting Products Division	Salem, Mass
71450	CTS Corp.	Elkhardt, Ind.
71468	ITT Cannon Electric, Inc.	Los Angeles, Calif.
71590	Centralab, Division of Globe Union, Inc.	Milwaukee, Wis.
72136	Electromotive Mfg. Co., Inc.	Willimantic, Conn.
72619	Dialight Corp.	Brooklyn, N. Y.
72825	Hugh H. Eby, Inc.	Philadelphia, Penna.
72914	Grimes Mfg. Company	Decatur, Ill.
72982	Erie Technological Products, Inc.	Erie, Pa.
73293	Hughes Aircraft Company Electron Dynamics Division	Torrance, Calif.
73899	JFD Electronic Company A Division of Stratford Retreat House	Brooklyn, N. Y.
74970	E. F. Johnson, Company	Waseca, Minn.

TABLE 6-2. LIST OF MANUFACTURERS (Continued)

MFG CODE NUMBER	NAME	ADDRESS
76854	Oak Manufacturing Company	Crystal Lake, Ill.
77280	Bendix Corporation, Scintilla Division	Sidney, N. Y.
78488	Stackpole Carbon Company	St. Marys, Penna.
80131	Electronics Indistries Assoc.	Washington, D. C.
80294	Bourns, Inc.	Riverside, Calif.
86335	Glenco Corporation	Metuchen, N. J.
91146	Cannon Electric Company	Salem, Mass.
96095	HI-Q, Division of Aerovox	Olean, N. Y.

INDEX

	Paragraph (Figure) *Table
A	
Adjustments:	
BFO circuit	5-19
Receiver LSB AGC circuit	5-29
Receiver USB AGC circuit	5-24
5 MC oscillator circuit	5-9
20-volt regulator circuit	5-4
500 CPS oscillator circuit	5-14
Drive Chain	5-67
Coupler	5-68
AM detector:	
component and test point location	(5-29)
functional circuit description	4-112
simplified schematic diagram	(4-12)
test data	4-116
AM mode gate and filter:	
AM operation	4-93
component and test point location	(5-23)
CW operation	4-94
functional circuit description	4-91
simplified schematic diagram	(4-9)
test data	4-95
Antenna overload:	
component and test point location	(5-21)
functional circuit description	4-43
simplified schematic diagram	(4-3)
test data	4-46
Audio amplifier:	
functional circuit description	4-118
simplified schematic diagram	(4-13)
test data	4-123
B	
BFO and amplifier:	
component and test point location	(5-26)
functional circuit description	4-143
simplified schematic diagram	(4-16)
test data	4-147
BFO circuit adjustment:	5-19
control settings	5-21
instructions	5-23
test equipment	5-20
test set-up	5-22
C	
Chain Drive Mechanism	5-58
Repair	5-61
Reassembly	5-63
Adjustments	5-65
Checks and adjustments, operator's maintenance	3-17
Circuit description. (See assembly or circuit concerned.)	
Comparator:	
functional circuit description	4-212
simplified schematic diagram	(4-28)
test data	4-216
Component and test-point location. (See assembly or circuit concerned.)	
Control switching, functional circuit description	4-344
Controls and indicators, description of	3-10
Coupler adjustment (chain)	5-68
Crystal complement, reference data	1-10, *1-2
D	
Depot repair	5-57
Description of controls and indicators	3-10
Divide-by-five multivibrator, timing diagram	(4-32)
Divide-by-ten multivibrator:	
component and test-point location	(5-94)
functional circuit description	4-311
simplified schematic diagram	(4-46)
test data	4-318
timing chart	*4-1
timing diagram	4-47
Drive chain adjustment	5-67
E	
Emergency maintenance	3-21
Emergency maintenance for electronic assemblies	5-54
Equipment and publications required but not supplied	1-20, *1-4

INDEX (Cont)

	Paragraph (Figure) *Table
Equipment supplied	1-18, *1-3
Error detector/amplifier:	
functional circuit description	4-194
simplified schematic diagram	(4-25)
test data	4-197
Extender test cable data	1-22, *1-5
F	
Failure and performance and operational reports	5-1
Frequency standard electronic assembly:	
component location	(5-61)
schematic diagram	(5-5)
servicing block diagram	(4-56)
Frequency translation, functional block diagram	(4-2)
Functional circuit description. (See assembly or circuit concerned.)	
Functional description:	3-1
general	3-2
operation	3-4
Functional description. (See assembly or circuit concerned.)	
G	
Gain-controlled IF. amplifier:	
component and test-point location	(5-31)
functional circuit description	4-97
simplified schematic diagram	(4-10)
test data	4-104
Gain-controlled IF./audio amplifier, component and test point location	(5-31)
General description	1-4
H	
Hi-band/lo-band mixer/amplifier:	
component and test point location	(5-76)
functional circuit description	4-161
simplified schematic diagram	(4-19)
test data	4-166
High frequency mixer:	
functional circuit description	4-63
simplified schematic diagram	(4-6)
test data	4-66
HF mixer/amplifier, component location	(5-54)
I	
Inspection and adjustment:	2-19
adjustment	2-27
inspection	2-20
performance checks	2-21
Installation requirements:	2-8
consideration	2-9
installation	2-11
interconnection	2-14
inspection and adjustment	2-25
interference reduction	2-29
Introduction:	6-1
reference designations	6-2
ref desig prefix	6-4
L	
List of manufacturers	6-11, *6-2
List of units	6-6
Logical trouble-shooting:	4-1
failure analysis	4-13
listing probable faulty function	4-7
localizing the faulty function	4-9
localizing probable faulty function	4-7
symptom elaboration	4-5
symptom recognition	4-3
LSB filter:	
functional circuit description	4-78
ISB operation	4-81
LSB operation	4-80
test data	4-82
Low frequency mixer:	
functional circuit description	4-73
simplified schematic diagram	(4-8)
test data	4-76
M	
Maintenance:	
emergency	3-21
operator's	3-16
preventive	3-19, 5-2
Maintenance parts list	6-8, *6-1
MC error mixer:	

INDEX (Cont)

	Paragraph (Figure) *Table
functional circuit description	4-189
simplified schematic diagram	(4-24)
test data	4-192
MC oscillator:	
component and test point location	(5-67)
functional circuit description	4-149
simplified schematic diagram	(4-17)
test data	4-153
Error Detection/Amplifier, component and test point location	(5-68)
MC spectrum generator:	
functional circuit description	4-184
simplified schematic diagram	(4-23)
test data	4-187
Megacycle assembly A2, component location	(5-50)
Megacycle assembly A3, component location	(5-34)
Megacycle assembly A4, A14, A22, component location	(5-35)
Megacycle assembly A5, A8, A26, component location	(5-36)
Megacycle assembly A6, A7, component location	(5-37)
Megacycle assembly A9, component location	(5-38)
Megacycle assembly A10, component location	(5-39)
Megacycle assembly A11, A15, A16, component location	(5-40)
Megacycle assembly A12, A13, A23, component location	(5-41)
Megacycle assembly A17, component location	(5-42)
Megacycle assembly A18, component location	(5-43)
Megacycle assembly A19, component location	(5-44)
Megacycle assembly A20, component location	(5-45)
Megacycle assembly A21, component location	(5-46)
Megacycle assembly A24, A27, A28, component location	(5-47)
Megacycle assembly A25, component location	(5-48)
Megacycle assembly A26, component location	(5-49)
Mid frequency mixer:	
functional circuit description	4-68
simplified schematic diagram	(4-7)
test data	4-71
Mode gates and filters, simplified schematic diagram	(4-9)
Mode gates, component and test point location	(5-23)
Mode selector electronic assembly A2A1	5-48
removal	5-49
test equipment	5-50
repair	5-51
reassembly	5-52
adjustments	5-53

N

Non-repairable electronic assemblies	5-37
frequency standard electronic assembly A2A5	5-40
RF amplifier electronic assembly A2A4	5-38
translator/synthesizer electronic assembly A2A6	5-39
Notes	6-15

O

Operating checks and adjustments	3-17
Operating controls, indicators, and connectors	*3-1
Operating procedures:	3-8
description of controls and indicators	3-10
sequence of operation	3-12
shut down	3-14
Operator's maintenance:	3-16
emergency maintenance	3-21
operating checks and adjustments	3-17
preventive maintenance	3-19
Operator's preventive maintenance checks	*3-2
Oven control:	
component and test point location	(5-63)
functional circuit description	4-205
simplified schematic diagram	(4-27)
test data	4-210
Oven control and amplifier, component location	(5-63)

P

Performance checks	2-28

INDEX (Cont)

	Paragraph (Figure) *Table
Phase detector, vector diagram...	(4-45)
Power requirements	2-3
Power supply:	
functional circuit description..	4-329
simplified schematic diagram .	(4-49)
test data	4-334
Product/AM detectors, component and test-point location	(5-29)
Product detector:	
component and test point location.....	(5-29)
functional circuit description..	4-106
simplified schematic diagram .	(4-11)
test data	4-110
Preparation for reshipment.....	1-24
Preventive maintenance operator	3-19

R

Receiver code generator, schematic diagram	(5-12)
component location.....	5-102
Receiver IF./audio amplifier electronic assemblies	5-42
adjustments	5-47
reassembly.....	5-46
removal.....	5-43
repair	5-45
test equipment.....	5-44
Receiver IF./audio amplifier electronic assembly:	
component location.....	(5-27) (5-30)
schematic diagram.....	(5-3)
servicing block diagram	(4-55)
Receiver LSB AGC circuit adjustment:.....	5-29
control settings.....	5-31
instructions	5-33
test equipment.....	5-30
test set-up	5-32
Receiver mode selector electronic assembly:	
component location.....	(5-22) (5-24)
schematic diagram.....	(5-2)
servicing block diagram	(4-54)
Receiver power supply, component location	(5-19)
Radio Receiver R-1051/URR, functional description:	
error cancellation	4-32
frequency generation	4-28
frequency standard.....	4-26
main signal flow	4-17
power supplies.....	4-38
step AGC signal flow	4-24
Receiver USB AGC circuit adjustment:.....	5-24
control settings.....	5-26
instructions	5-28
test equipment.....	5-25
test set-up	5-27
Receiver 500 CPS control, component location	(5-20)
Reference data:	1-14
crystal complement	1-16, *1-2
Reference designations.....1-6, 6-2, *1-1	
Repairable electronic assemblies	5-41
mode selector electronic assembly A2A1.....	5-48
receiver IF./audio amplifier electronic assemblies.....	5-42
RF amplifier bias, component location	(5-52)
RF amplifier electronic assembly:	
component location.....	(5-32) (5-33) (5-51) (5-53)
schematic diagram.....	(5-4)
servicing block diagram	(4-52)
RF amplifier electronic assembly A2A4, nonrepairable	5-38
RF amplifier V1:	
functional circuit description..	4-48
simplified schematic diagram .	(4-4)
test data	4-55
RF amplifier V2:	
functional circuit description..	4-57
simplified schematic diagram .	(4-5)
test data	4-61
RF translator, component and test point location.....	(5-101)
RF translator electronic subassembly:	
component location.....	(5-100)
schematic diagram.....	(5-11)
servicing block diagram	(4-53)
Radio Receiver R-1051/URR:	
circuit description	4-42
component and test point location .....(5-14)(5-15)(5-16)	
component location.....	(5-17)

INDEX (Cont)

	Paragraph (Figure) *Table
dimensions	(2-1)
equipment supplied	1-18, *1-3
functional block diagram	(4-1)
functional description	4-15
general description	1-4
installation diagram	(2-3)
installation requirements	2-8
main frame, schematic diagram	(5-1)
mounting bracket for rack mounting	(2-2)
operating controls, indicators and connectors	*3-1
operating procedures	3-8
overall simplified block diagram	(4-50)
power requirements	2-3
primary power distribution diagram	(5-13)
preparation for reshipment	1-18
rear view	(2-4)
reference designations	*1-1
relationship of units	(1-1)
scope	1-1
site selection	2-5
test data	4-40
top view, case removed	(1-2)
tuning, simplified schematic diagram	(4-50)

S

Schematic diagram. (See assembly or circuit concerned.)	
Scope	1-1
Sequence of operation, operating procedures	3-12
Servicing block diagram. (See assembly or circuit concerned.)	
Shipboard repair	5-34
emergency maintenance for electronic assemblies	5-54
general repair instructions	5-35
nonrepairable electronic assemblies	5-37
repairable electronic assemblies	5-41
Shutdown procedure, operating	3-14
Simplified schematic diagram. (See assembly or circuit concerned.)	
Site selection	2-5
Spare connector pins and spare filters	*5-1
Spectrum generator electronic subassembly:	
component location	(5-95)
schematic diagram	(5-10)
servicing block diagram	(4-57)
Spectrum generator/mixer, component and test point location	(5-70)
Step AGC:	
component and test point location	(5-28)
functional circuit description	4-131
simplified schematic diagram	(4-15)
test data	4-141
Step AGC and audio amplifier, component and test point location	(5-28)
Stock number identification	6-13
Switching functions for Mode Selector switch S2	4-348
AM	*4-5
CW	*4-6
FSK	*4-4
ISB	*4-8
LSB	*4-3
USB	*4-7

T

Test data. (See assembly or circuit concerned.)	
Test-point location. (See assembly or unit concerned.)	
Translator/synthesizer electronic assembly, component location	(5-65)
Tuning:	
functional circuit description	4-336
test data	4-342
Tuning and adjustment	5-3
BFO circuit adjustment	5-19
receiver LSB AGC circuit adjustment	5-29
receiver USB AGC circuit adjustment	5-24
5 MC oscillator circuit adjustment	5-9
20-volt regulator circuit adjustment	5-4

INDEX (Cont)

	Paragraph (Figure) *Table
500 CPS oscillator circuit adjustment	5-14
Tuning code chart	*4-2
U	
Unpacking and handling	2-1
USB mode gate and filter:	
FSK operation	4-88
functional circuit description	4-84
ISB operation	4-87
test data	4-89
USB operation	4-86
NUMERICAL	
1 KC spectrum generator:	
component and test point location	(5-98)
functional circuit description	4-272
simplified schematic diagram	(4-38)
test data	4-275
1 MC divide-by-two:	
functional circuit description	4-224
simplified schematic diagram	(4-30)
test data	4-227
1 MC synthesizer electronic subassembly:	
component location	(5-66) (5-69)
schematic diagram	(5-6)
servicing block diagram	(4-61)
1 and 10 KC mixer:	
functional circuit description	4-178
simplified schematic diagram	(4-22)
test data	4-182
1 and 10 KC synthesizer electronic subassembly:	
component location	(5-81) (5-85) (5-87) (5-88)
schematic diagram	(5-8)
servicing block diagram	(4-59)
and 10 KC synthesizer output, component and test point location	(5-86)
1.850 to 1.859 MC oscillator:	
component and test point location	(5-83)
functional circuit description	4-174
simplified schematic diagram	(4-21)
test data	4-176
1.981 MC error mixer:	
functional circuit description	4-277
simplified schematic diagram	(4-39)
test data	4-280
4.553 to 5.453 MC oscillator:	
component and test point location	(5-74)
functional circuit description	4-155
simplified schematic diagram	(4-18)
test data	4-159
5 KC spectrum generator:	
component and test point location	(5-99)
functional circuit description	4-291
simplified schematic diagram	(4-42)
test data	4-294
5 MC divide-by-five:	
functional circuit description	4-218
simplified schematic diagram	(4-29)
test data	4-222
5 MC frequency standard:	
functional circuit description	4-199
simplified schematic diagram	(4-26)
test data	4-203
5 MC multiplier, dividers and comparator, component and test point location	(5-62)
5 MC multiply-by-two:	
functional circuit description	4-251
simplified schematic diagram	(4-35)
test data	4-254
5 MC oscillator circuit adjustment:	5-9
control settings	5-11
instructions	5-13
test equipment	5-10
test set-up	5-12
5 MC oscillator, component location	(5-64)
5.16 to 5.25 MC oscillator:	
component and test point location	(5-82)
functional circuit description	4-168
simplified schematic diagram	(4-20)
test data	4-172
7.089 MC error mixer:	
component and test point location	(5-84)
functional circuit description	4-286
simplified schematic diagram	(4-41)

INDEX (Cont)

	Paragraph (Figure) *Table
test data	4-289
7.089 MC mixer, component and test point location	(5-84)
7.1 MC mixer:	
component and test point location	(5-90)
functional circuit description	4-320
simplified schematic diagram	(4-48)
test data	4-327
9.07 MC error mixer:	
functional circuit description	4-282
simplified schematic diagram	(4-40)
test data	4-284
10 KC rotor assembly, component location	(5-56), (5-59)
10 KC spectrum generator:	
component and test point location	(5-97)
functional circuit description	4-265
simplified schematic diagram	(4-37)
test data	4-270
10.747 MC mixer:	
component and test point location	(5-78)
functional circuit description	4-238
simplified schematic diagram	(4-33)
test data	4-242
10.747 MC mixer AGC:	
component and test point location	(5-80)
functional circuit description	4-244
simplified schematic diagram	(4-34)
test data	4-249
17.847/27.847 MC mixer:	
component and test point location	(5-72)
functional circuit description	4-256
simplified schematic diagram	(4-36)
test data	4-263
20-volt regulator circuit adjustment:	5-4
control settings	5-6
instructions	5-8
test equipment	5-5
test set-up	5-7
100 KC rotor assembly, component location	(5-55), (5-57), (5-59), (5-61)
100 KC spectrum generator:	
component and test point location	(5-96)
functional circuit description	4-229
simplified schematic diagram	(4-31)
test data	4-236
100 KC synthesizer electronic subassembly:	
component location	(5-73), (5-75), (5-77), (5-79)
schematic diagram	(5-7)
servicing block diagram	(4-60)
500 CPS oscillator:	
component and test point location	(5-92)
functional circuit description	4-296
simplified schematic diagram	(4-43)
test data	4-309
500 CPS oscillator, AC equivalent circuit, simplified schematic diagram	(4-44)
500 CPS oscillator circuit adjustment:	5-14
control settings	5-16
instructions	5-18
test equipment	5-15
test set-up	5-17
500 CPS synthesizer electronic subassembly:	
component location	(5-89), (5-91), (5-93)
schematic diagram	(5-9)
servicing block diagram	(4-58)
500 KC gate:	
component and test point location	(5-25)
functional circuit description	4-125
simplified schematic diagram	(4-14)
test data	4-129

NAVSHIPS NO._____ USER ACTIVITY COMMENT SHEET Vol. No._____

(Fold on dotted lines on reverse side, staple in corner, and send to Bureau of Ships, Code 240, Washington 25, D.C.)

PROBLEM AREA:

Both sides of this form to be reproduced locally as required.

Fold

DEPARTMENT OF THE NAVY
BUREAU OF SHIPS
WASHINGTON 25, D.C.

OFFICIAL BUSINESS

POSTAGE AND FEES PAID
NAVY DEPARTMENT

CHIEF, BUREAU OF SHIPS
PUBLICATIONS AND INFORMATION RETRIEVAL BRANCH
DEPARTMENT OF THE NAVY
WASHINGTON 25, D. C.

Fold