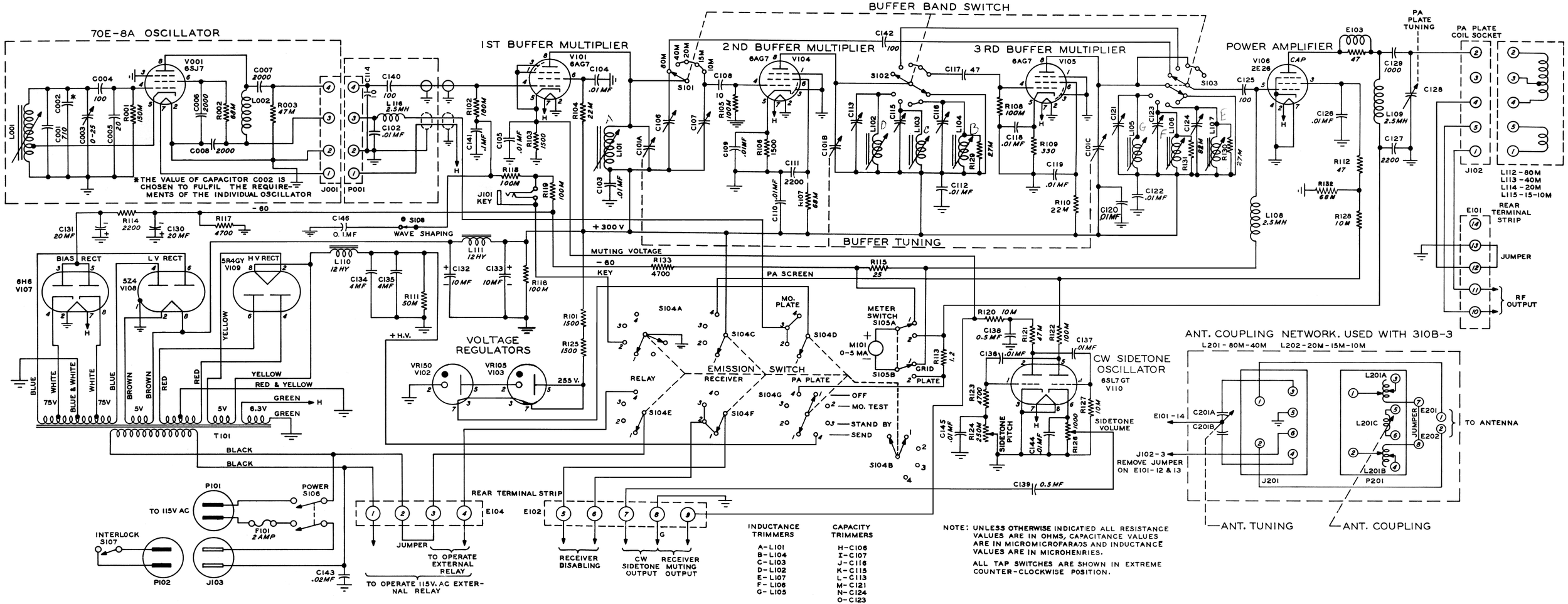

Figure 4-3 310B-1, 3 Schematic Diagram

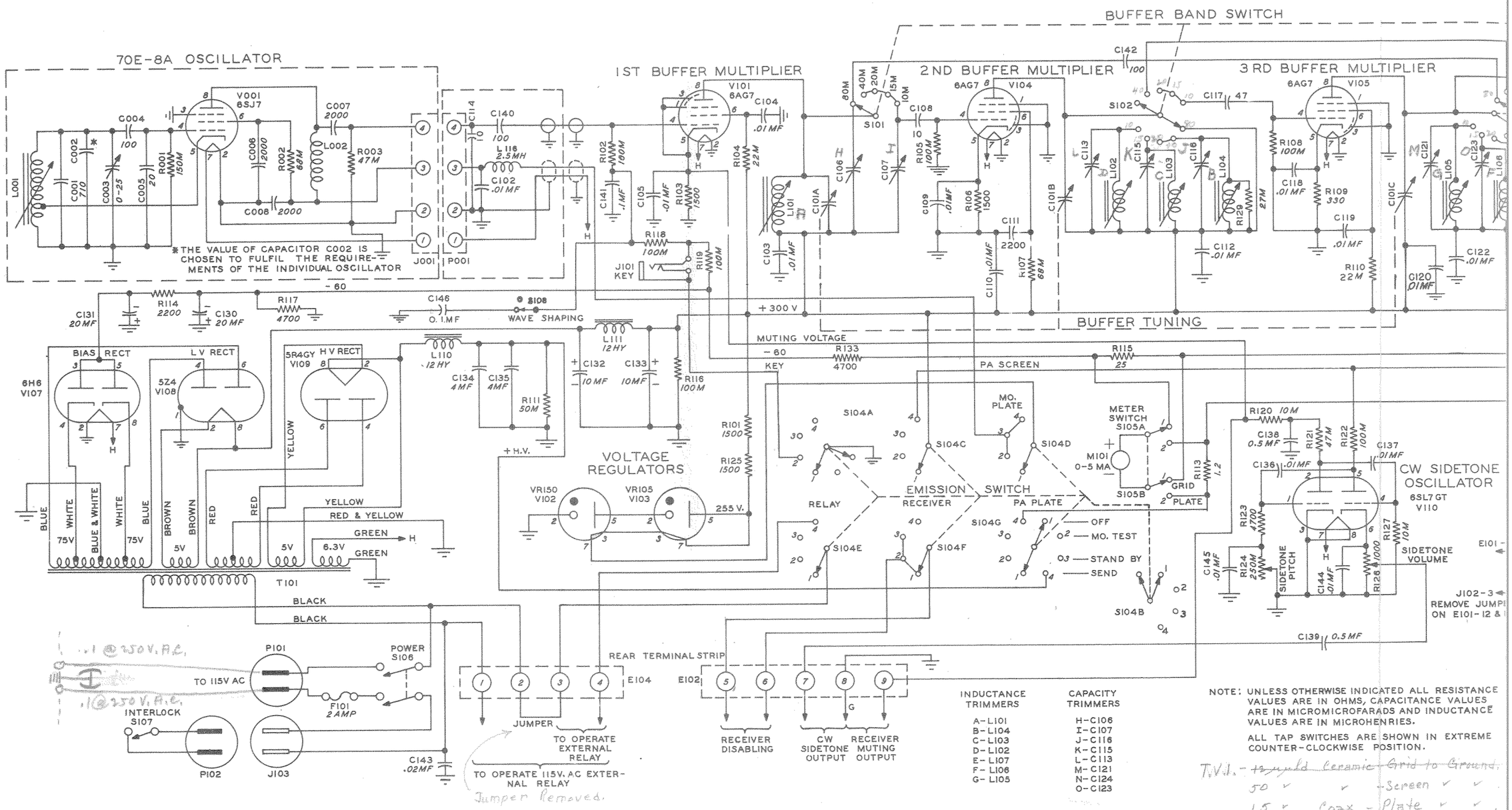
70E-8A OSCILLATOR
V001 6SJ7
L001
C001 710
C002 *
C003 0-25
C004 100
C005 20
R001 150M
C006 1000
R002 68M
C007 2000
L002
R003 47M
C008 2000
J001
P001
C114
C140 100
L116 2.5MH
C102 .01MF
R102 100M
C141 .1MF
C105 .01MF
R103 1500
R118 100M
R119 100M
J101 KEY
1ST BUFFER MULTIPLIER
V101 6AG7
C104 .01MF
R104 22M
L101
C101A
C103 .01MF
2ND BUFFER MULTIPLIER
V104 6AG7
C108 10
R105 100M
C109 .01MF
R106 1500
C111 2200
C110 .01MF
R107 68M
C101B
3RD BUFFER MULTIPLIER
V105 6AG7
R108 100M
C118 .01MF
R109 330
C119 .01MF
R110 22M
C101C
C120 .01MF
C122 .01MF
BUFFER BAND SWITCH
C142 100
S101
S102
C117 47
C113
C115
C116
L102
L103
L104
R129 27M
C112 .01MF
C121
C123
L105
L106
BUFFER TUNING
* THE VALUE OF CAPACITOR C002 IS CHOSEN TO FULFIL THE REQUIREMENTS OF THE INDIVIDUAL OSCILLATOR
- 60
R114 2200
C131 20MF
C130 20MF
R117 4700
C146 0.1MF
S108 WAVE SHAPING
L111 12HY
+ 300 V
MUTING VOLTAGE
- 60
KEY
R133 4700
PA SCREEN
R115 25
BIAS RECT
6H6 V107
LV RECT
5Z4 V108
5R4GY V109
HV RECT
L110 12HY
C134 4MF
C135 4MF
R111 50M
C132 10MF
C133 10MF
R116 100M
+ H.V.
R101 1500
R125 1500
VOLTAGE REGULATORS
VR150 V102
VR105 V103
255 V.
S104A
S104C
S104D
S104E
S104F
S104G
S104B
RELAY
EMISSION SWITCH
RECEIVER
PA PLATE
MO. PLATE
OFF
MO. TEST
STAND BY
SEND
METER SWITCH S105A
M101 0-5 MA
S105B
GRID
PLATE
R113 1.2
R120 10M
C138 0.5MF
R121 47M
R122 100M
C137 .01MF
C136 .01MF
CW SIDETONE OSCILLATOR
6SL7 GT V110
R123 4700
R124 250M
C145 .01MF
SIDETONE PITCH
C144 .01MF
R126 1000
R127 10M
SIDETONE VOLUME
E101
J102-3 REMOVE JUMPER ON E101-12 &
C139 0.5MF
BLUE
WHITE
BLUE & WHITE
WHITE
BLUE
75V
BROWN
BROWN
RED
RED
5V
YELLOW
RED & YELLOW
GREEN
6.3V
GREEN
T101
BLACK
BLACK
.1 @ 250V. A.C.
.1 @ 250 V. A.C.
P101
TO 115V AC
POWER S106
F101 2AMP
INTERLOCK S107
P102
J103
C143 .02MF
REAR TERMINAL STRIP
E104
E102
JUMPER
TO OPERATE EXTERNAL RELAY
TO OPERATE 115V. AC EXTERNAL RELAY
Jumper Removed.
RECEIVER DISABLING
CW SIDETONE OUTPUT
RECEIVER MUTING OUTPUT
INDUCTANCE TRIMMERS
A-L101
B-L104
C-L103
D-L102
E-L107
F-L106
G-L105
CAPACITY TRIMMERS
H-C106
I-C107
J-C116
K-C115
L-C113
M-C121
N-C124
O-C123
NOTE: UNLESS OTHERWISE INDICATED ALL RESISTANCE VALUES ARE IN OHMS, CAPACITANCE VALUES ARE IN MICROMICROFARADS AND INDUCTANCE VALUES ARE IN MICROHENRIES.
ALL TAP SWITCHES ARE SHOWN IN EXTREME COUNTER-CLOCKWISE POSITION.
T.V.I. - ~~.1 µfd Ceramic Grid to Ground.~~
50 " " - Screen " "
15 " Coax - Plate " "
.1 µfd Sprague - A.C. " "
.1 " " - " " "
83-1R Coax - Output.

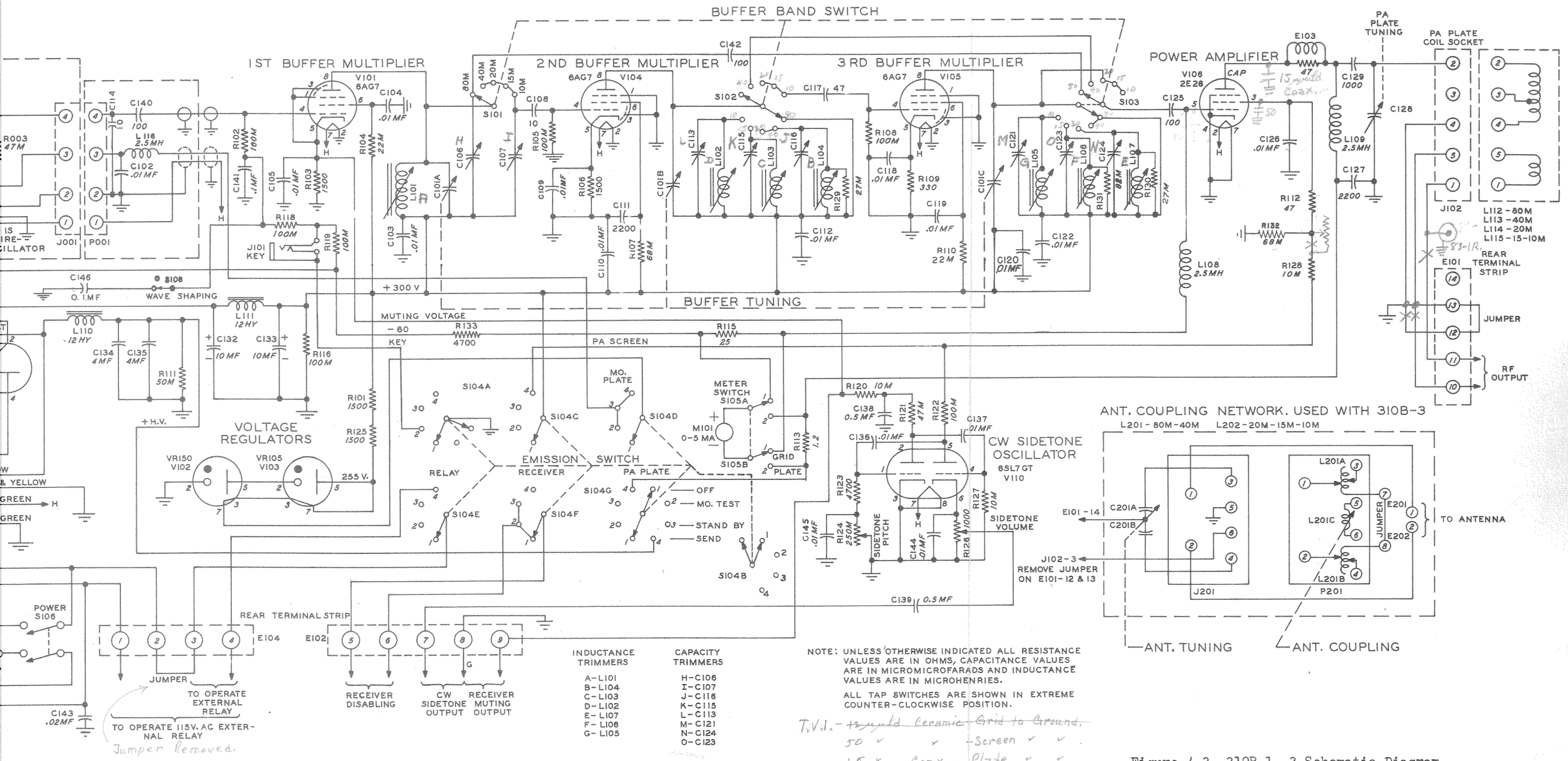

Figure 4-3 310B-1, 3 Schematic Diagram