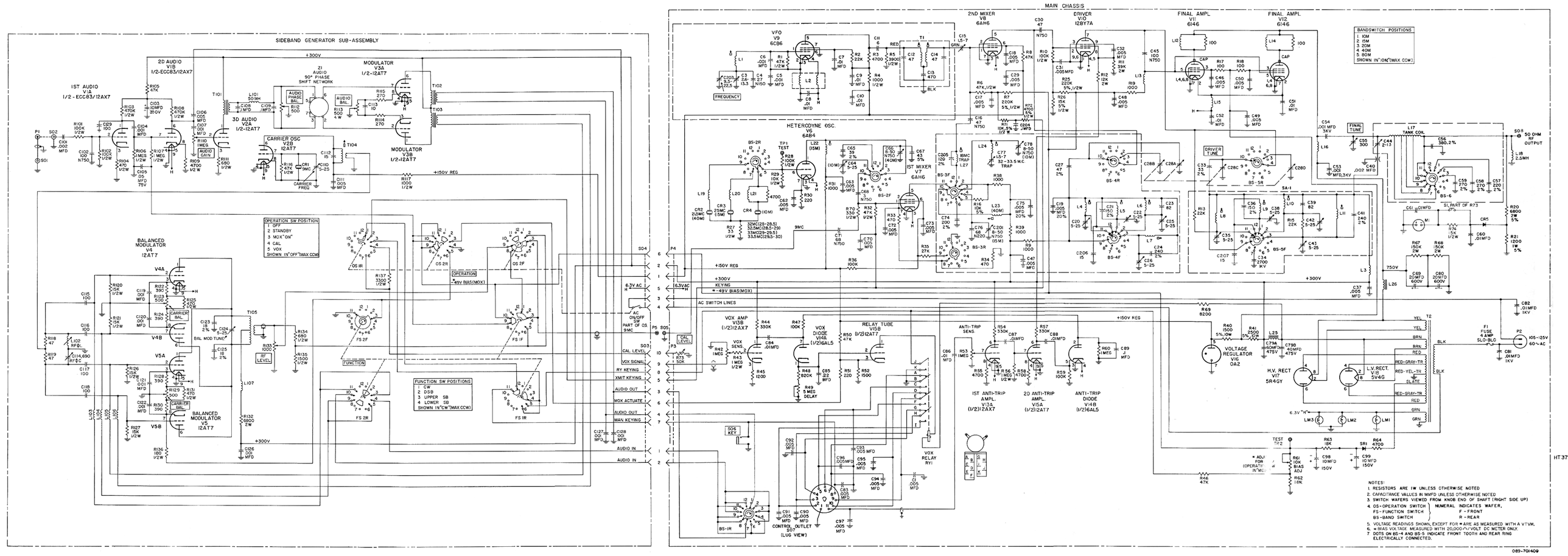

NOTES:
1. RESISTORS ARE 1W UNLESS OTHERWISE NOTED
2. CAPACITANCE VALUES IN MMFD UNLESS OTHERWISE NOTED
3. SWITCH WAFERS VIEWED FROM KNOB END OF SHAFT (RIGHT SIDE UP)
4. OS-OPERATION SWITCH, FS-FUNCTION SWITCH, BS-BAND SWITCH — NUMERAL INDICATES WAFER, F - FRONT, R - REAR
5. VOLTAGE READINGS SHOWN, EXCEPT FOR * ARE AS MEASURED WITH A VTVM.
6. * BIAS VOLTAGE MEASURED WITH 20,000 Ω/VOLT DC METER ONLY.
7. DOTS ON BS-4 AND BS-5 INDICATE FRONT TOOTH AND REAR RING ELECTRICALLY CONNECTED.

089-701409

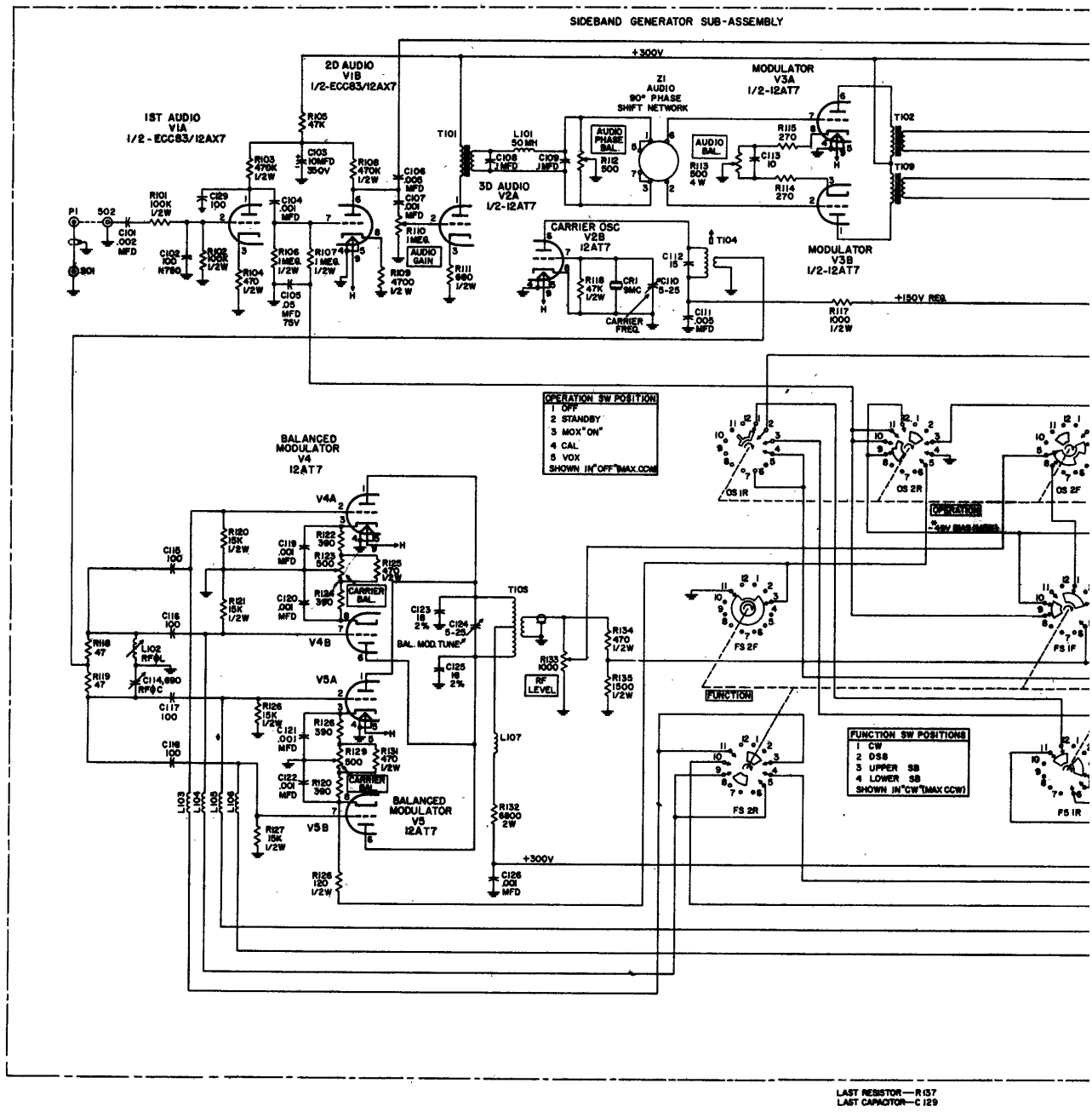

LAST RESISTOR—R137
LAST CAPACITOR—C129

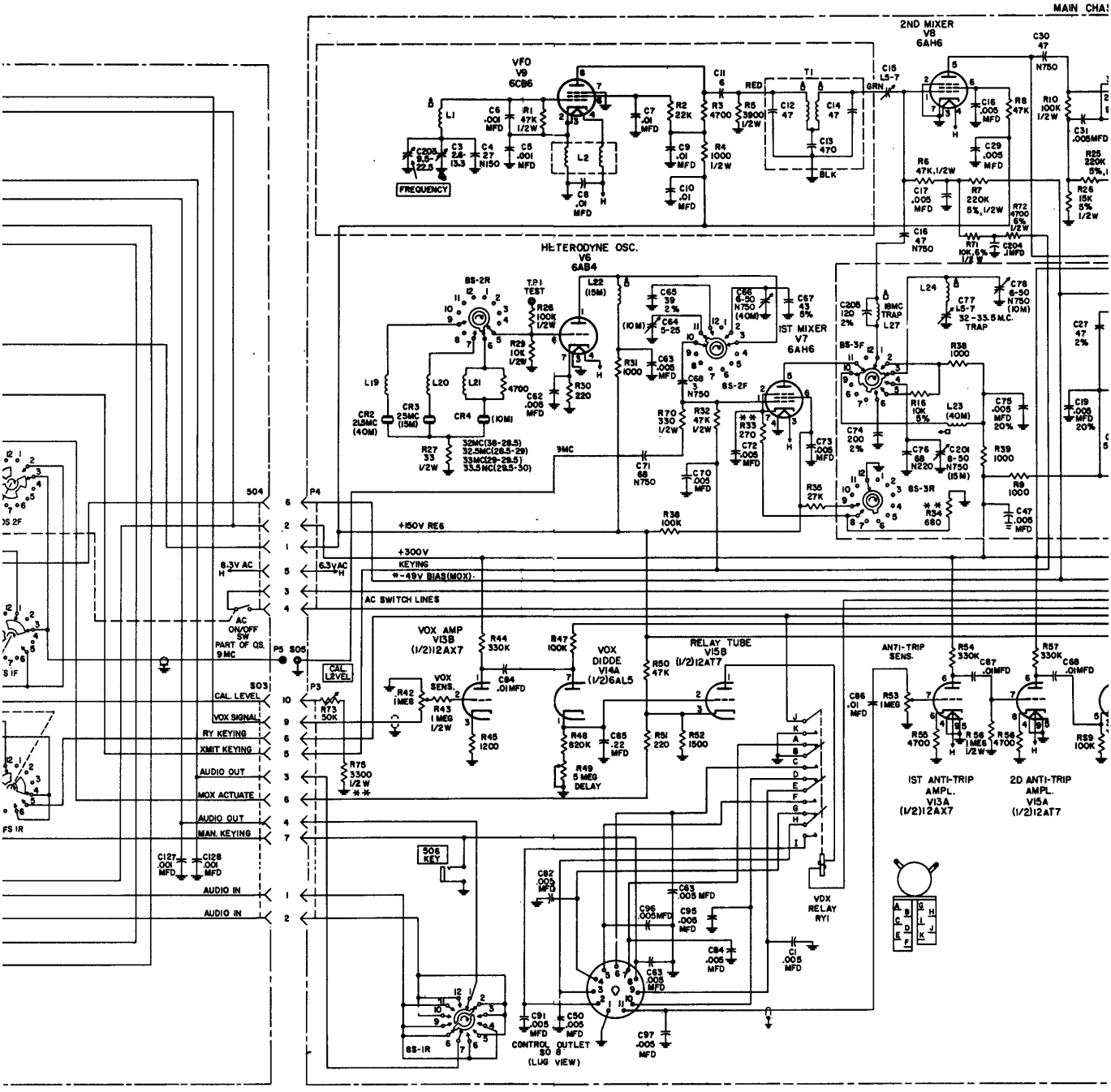
MAIN CHAS
2ND MIXER V8 6AH6
VFO V9 6CB6
FREQUENCY
HETERODYNE OSC. V6 6AB4
IST MIXER V7 6AH6
VOX AMP V13B (1/2)12AX7
VOX DIODE V14A (1/2)6AL5
RELAY TUBE V15B (1/2)12AT7
IST ANTI-TRIP AMPL. V13A (1/2)12AX7
2D ANTI-TRIP AMPL. V15A (1/2)12AT7
VOX RELAY RY1
+150V REG
+300V
KEYING
*-49V BIAS(MOX)
AC SWITCH LINES
CAL LEVEL
VOX SIGNAL
RY KEYING
XMIT KEYING
AUDIO OUT
MOX ACTUATE
AUDIO OUT
MAN. KEYING
AUDIO IN
AUDIO IN
6.3V AC
AC ON/OFF SW PART OF QS 9MC
506 KEY
CONTROL OUTLET SO (LUG VIEW)
8S-IR
8S-2R
8S-2F
8S-3F
8S-3R
9MC

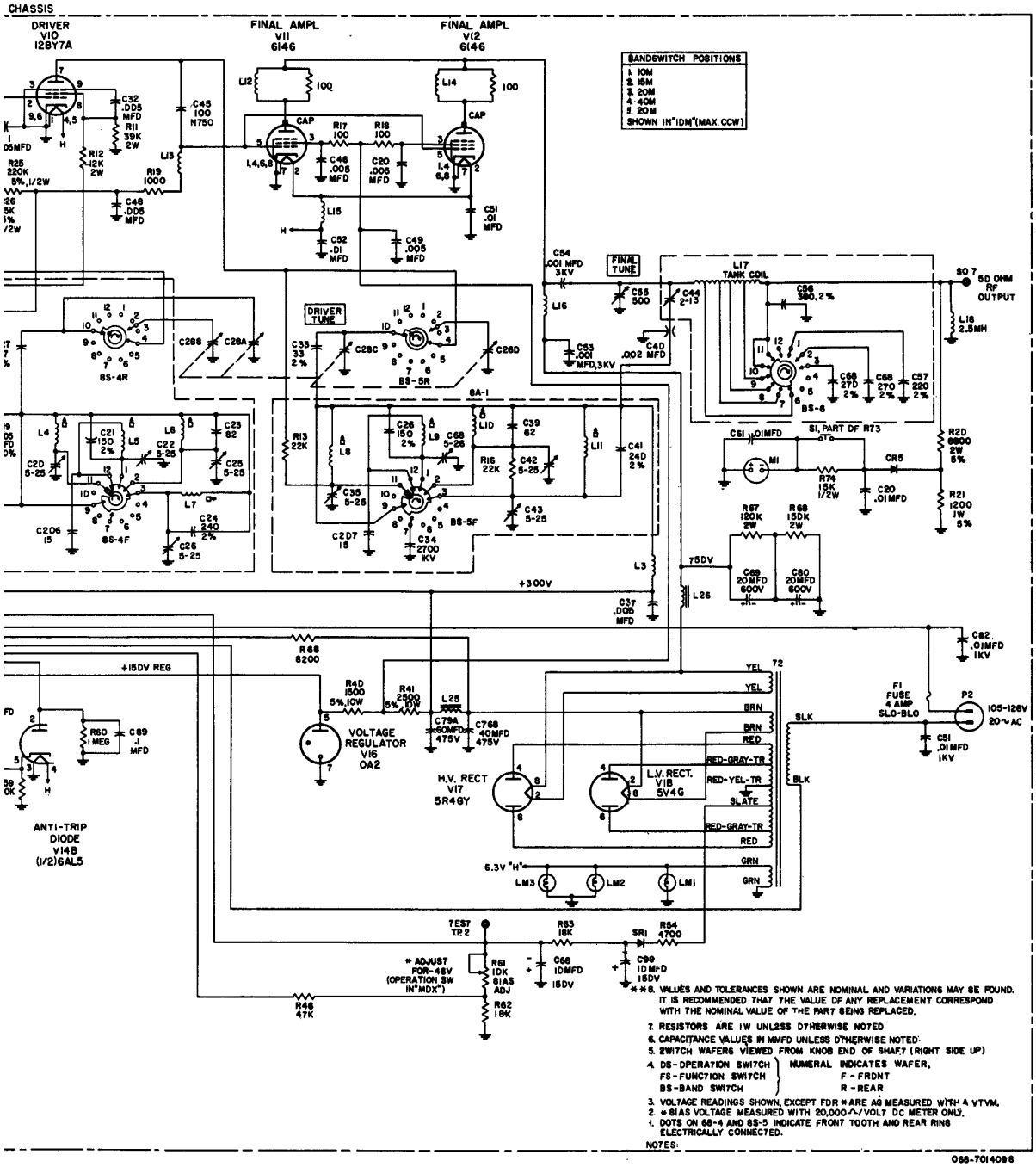
CHASSIS
DRIVER V10 12BY7A
FINAL AMPL V11 6146
FINAL AMPL V12 6146
BANDSWITCH POSITIONS
1. 10M
2. 15M
3. 20M
4. 40M
5. 20M
SHOWN IN "10M" (MAX. CCW)
DRIVER TUNE
FINAL TUNE
TANK COIL
50 OHM RF OUTPUT
+300V
+150V REG
VOLTAGE REGULATOR V16 0A2
H.V. RECT V17 5R4GY
L.V. RECT. V18 5V4G
ANTI-TRIP DIODE V14B (1/2)6AL5
FUSE 4 AMP SLO-BLO
105-126V 20~AC
6.3V "H"
* ADJUST FOR -46V (OPERATION SW IN "MDX")
MAIN CHASSIS
LAST RESISTOR — R76
LAST CAPACITOR — C201
HT 37
NOTES:
1. DOTS ON BS-4 AND BS-5 INDICATE FRONT TOOTH AND REAR RING ELECTRICALLY CONNECTED.
2. * BIAS VOLTAGE MEASURED WITH 20,000-Ω/VOLT DC METER ONLY.
3. VOLTAGE READINGS SHOWN, EXCEPT FOR * ARE AS MEASURED WITH A VTVM.
4. OPERATION SWITCH, FUNCTION SWITCH, BAND SWITCH — NUMERAL INDICATES WAFER, F - FRONT, R - REAR
5. SWITCH WAFERS VIEWED FROM KNOB END OF SHAFT (RIGHT SIDE UP)
6. CAPACITANCE VALUES IN MMFD UNLESS OTHERWISE NOTED:
7. RESISTORS ARE 1W UNLESS OTHERWISE NOTED
* * 8. VALUES AND TOLERANCES SHOWN ARE NOMINAL AND VARIATIONS MAY BE FOUND. IT IS RECOMMENDED THAT THE VALUE OF ANY REPLACEMENT CORRESPOND WITH THE NOMINAL VALUE OF THE PART BEING REPLACED.
068-7014098