Schematic

THE HALLICRAFTERS INC.

MODEL SX24
Skyrider Defiant

Unless otherwise specified the SX24 Receiver operates on 100-125 volt 50-60 cycle current.

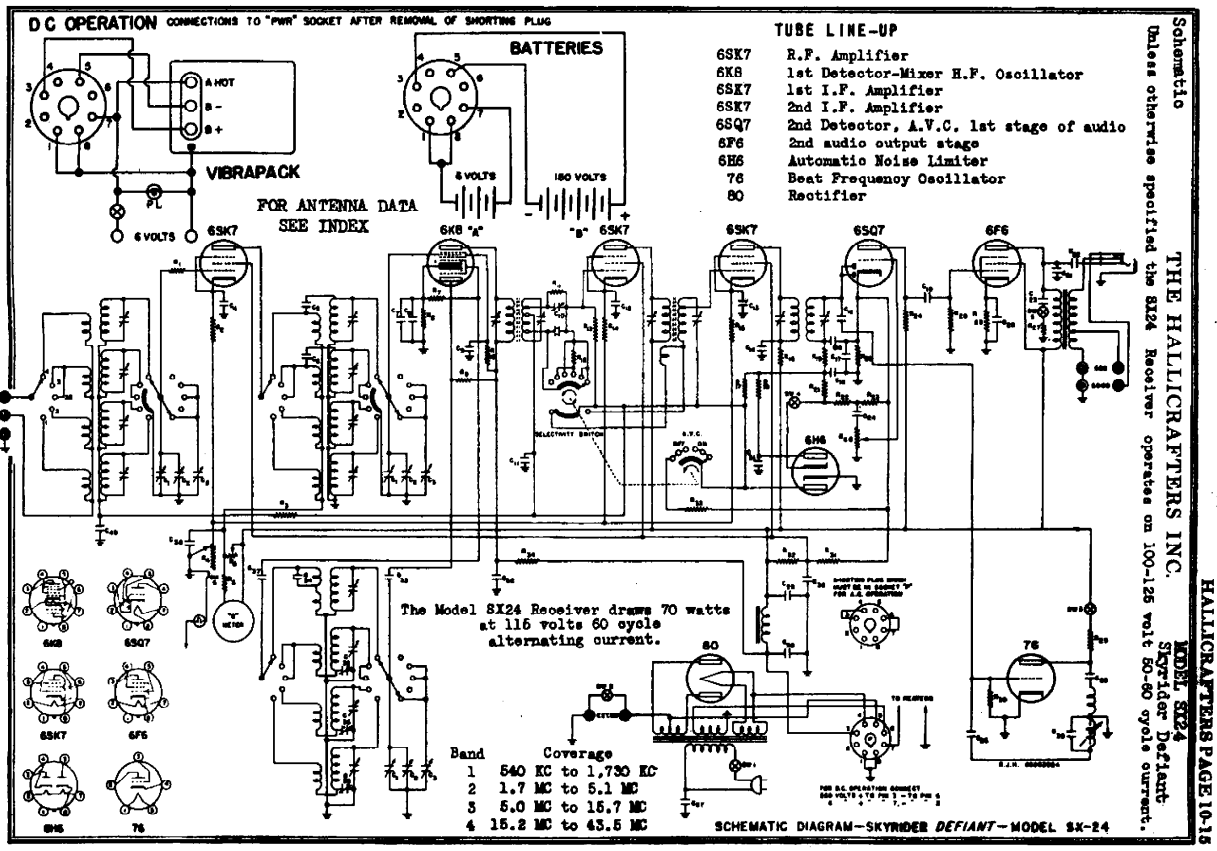

TUBE LINE-UP

6SK7	R.F. Amplifier
6K8	1st Detector-Mixer H.F. Oscillator
6SK7	1st I.F. Amplifier
6SK7	2nd I.F. Amplifier
6SQ7	2nd Detector, A.V.C. 1st stage of audio
6F6	2nd audio output stage
6H6	Automatic Noise Limiter
76	Beat Frequency Oscillator
80	Rectifier

©John F. Rider, Publisher